HISTORIC DISTRICT COMMISSION

Chair	Michael Marino
Contact	Jason Martin, Preservation Planner 444 Westminster St, Suite 3A Providence RI 02903 401.680.8517 jmartin@providenceri.gov
Description	Regulates development in historic districts
Meeting Schedule	Every 4th Monday of the month at 4:45pm. Meetings are held on the 1st floor of 444 Westminster St, Providence RI, 02903 Schedules are available on www.providenceri.gov/planning and www.state.ri.us/openmeetings/
Application Process	Applications may be received at the Planning and Development Department on 444 Westminster St, Site 3A, Providence RI 02903. Applications are due 14 days before the next Historic District Commission meeting. Please contact staff for more information on the application process. Length of application process varies on the complexity of the project. Applicants are strongly urged to meet with Department of Planning and Development staff before submitting an application
Fees	No Fee – Repairs, replacement in-kind, restoration $50 – Minor alterations $100 – Major alterations $400 – New construction, demolition Fees are to be made payable to "Providence City Collector"
Time Frame for Decision	Notices sent approximately 2 weeks after meeting
Appeal Process	Must file appeal with Zoning Board of Review within 20 days of notification

All meeting schedules are subject to change. Please refer to the listed contact, website, or www.state.ri.us/openmeetings/, for the most updated meeting schedule information.

PROVIDENCE HISTORIC DISTRICT COMMISSION

DEPARTMENT OF PLANNING AND DEVELOPMENT

444 Westminster Street, Suite 3A, Providence, RI 02903 401.680.8517
email: jmartin@providenceri.gov or visit us on the web at: www.providenceri.gov/planning

APPLICATION FOR CERTIFICATE OF APPROPRIATENESS

For Office Use Only

Application Number:				Date Received:
Type of Review:				Date Accepted:
In House		Public Hearing		Accepted By:

APPLICATIONS MUST BE SUBMITTED AT LEAST 14 DAYS BEFORE A PUBLIC HEARING. PLEASE CONTACT THE PHDC STAFF FOR HEARING DATES AND FILING DEADLINES.

PLEASE PRINT OR TYPE

PART I – GENERAL INFORMATION

PROPERTY ADDRESS:	Plat: Lot:
Property Name (if any):	Historic District:

OWNER Name:	Telephone:
Mailing Address:	Zip Code:

APPLICANT Name:	Telephone:
Mailing Address:	Zip Code:

ARCHITECT/DESIGNER Name:	Telephone:
Mailing Address:	Zip Code:
CONTRACTOR/BUILDER Name:	Telephone:
Mailing Address:	Zip Code:

I certify that all information contained in this application is true and accurate to the best of my knowledge.
Both signatures required. Please print or type name underneath signature.

Applicant: _____ Owner:_____

PART II – DESCRIPTION OF PROPOSED WORK

Approval Sought *(check one)*: ☐ Conceptual ☐ Final

Application Category *(check as many as necessary)*:

☐	Repair/Replacement In-Kind	☐	Storm/Screen Windows/Doors
☐	Minor Alterations	☐	Roofs/Gutters/Downspouts
☐	Awnings	☐	Major Alterations
☐	Fences/Gates	☐	Additions to Existing Structure
☐	Mechanical/Electrical Equipment	☐	Windows/Doors
☐	Shutters/Blinds	☐	Barrier Free Access Improvements
☐	Signs	☐	New Construction
☐	Site Improvements	☐	Demolition

Over, Please

BRIEFLY BUT COMPLETELY DESCRIBE THE ENTIRE SCOPE OF WORK: what you propose to do, where on the property the work will occur, and how the work will be accomplished. For large projects, an itemized list is recommended. Attach additional pages if necessary.

PART III – DOCUMENTATION

See PHDC Standards and Guidelines for checklists of documentation requirements for your specific project. INCOMPLETE APPLICATIONS CANNOT BE ACCEPTED FOR REVIEW. Mark each piece of documentation according to the list below. All documentation except materials samples and models will be retained by the PHDC as part of the public record. All documentation must be labeled and dated. Drawings must show dimensions and scale, and should illustrate existing as well as proposed conditions. *Place a check mark next to each exhibit you have submitted with this application.*

☐	EXHIBIT 1 – Application Form (signed by property owner and applicant)
☐	EXHIBIT 2 – 35mm Photographs (color or B/W, 3" x 5" min. Digital photos okay. No instant snapshots.)
☐	EXHIBIT 3 – Drawings, e.g. Elevations, Plans, Sections (each labeled separately: Exhibit 3A, 3B, etc.)
☐	EXHIBIT 4 – Shop Drawings
☐	EXHIBIT 5 – List of Abutting Property Owners Names and Mailing Addresses (omit for in-house reviews)
☐	EXHIBIT 6 – Financial Data (demolition proposals only)
☐	EXHIBIT 7 – Model (new construction proposals only)
☐	EXHIBIT 8 – Material Samples
☐	EXHIBIT 9 – Other Information (specify):
☐	EXHIBIT 10 – List of Expert Witnesses or Owner's Representatives

PART IV – MISCELLANEOUS

☐ Application Fee ($ _____ See attached schedule for applicable fee.)

Please check any of the following statements which apply to this project:

☐ This application is filed in response to notice from the PHDC of work done without prior approval.

☐ This project will also require zoning variances and/or review by the Building Board of Review.

☐ One or more expert witnesses will appear at the public hearing to testify in favor of this application. A list of names, addresses and professional qualifications of witnesses is attached as Exhibit 10. (Please note that the PHDC may limit verbal testimony so that all pubic comment may be entered in the record in a timely fashion. Written testimony may be submitted.

☐ Check this box if applying for tax credits with the Rhode Island Historical Preservation Commission.

☐ An attorney, architect, contractor or other representative will appear on the applicant's or owner's behalf at the public hearing. The name and business address of this representative is attached as Exhibit 10.

CITY OF PROVIDENCE
Jorge O. Elorza, Mayor

INSTRUCTIONS FOR COMPLETING AN APPLICATION FOR CERTIFICATE OF APPROPRIATENESS

Please read these instructions carefully before filling out an application form. Categories accompanied by an asterisk (*) are REQUIRED INFORMATION, without which an application cannot be processed. If you have any questions, please contact the PHDC staff at jmartin@providenceri.com or 401.680.8517.

PART I - GENERAL INFORMATION

***PROPERTY ADDRESS** - Indicate the street address of the property on which exterior work is proposed. Plat and Lot numbers are available from the Assessors' office in Providence City Hall. If the property has a historic or common name (e.g., St. Mary's Church, John Brown House, Abbott Park), indicate that. Also indicate in which local historic district the property is located: Armory, Broadway, College Hill, North Elmwood, PLD-Residential, PLD-Industrial & Commercial Buildings, South Elmwood, or Stimson Avenue.

***OWNER** - Indicate the name, complete mailing address and telephone number of the property owner (not the owner of a business located on the property). If the owner is an institution or corporation, or if the property is a condominium or cooperative, also indicate the name of a specific contact person. If the property is under a purchase and sale agreement, the seller is the owner and the buyer is the applicant.

***APPLICANT** - If the property owner is also the applicant, indicate "same as above." If a person other than the property owner is the applicant (e.g., tenant, architect, property manager, etc.), then indicate his or her name and complete mailing address and telephone number. If the applicant is an institution or corporation, indicate the name of a specific contact person.

ARCHITECT/CONTRACTOR - If an architect or contractor is associated with the project, indicate the firm name, contact person, complete mailing address, and telephone number. It is not required to have an architect or contractor in order to file an application, but professional advice is strongly recommended, particularly for alterations and new construction.

***SIGNATURES** - Signatures of both the applicant and the property owner are required. Underneath the signature, print or type the name of the person who has signed. Persons signing on behalf of an entity must have authority to do so; in cases of a condominium or cooperative, the chair or president of the association must sign as owner.

(Over, please)

DEPARTMENT OF PLANNING AND DEVELOPMENT
444 Westminster Street, Providence, Rhode Island 02903
401 680 8400 ph | 401 680 8492 fax
www.providenceri.gov

PART II - DESCRIPTION OF PROPOSED WORK

***APPROVAL SOUGHT** - Check either "Conceptual" or "Final." All new construction and additions must receive conceptual approval prior to final approval. For these types of applications check both boxes. Most other projects may request final approval when the application is first filed.

***APPLICATION CATEGORY** - Check as many categories as necessary to describe the scope of work. If you do not see your project among the listed categories, use the blank space to indicate it.

***WRITTEN DESCRIPTION** - Fully describe the scope of work and its impact on the building. Be as specific as possible. For example, "Replace windows" does not provide as much information as "Replace 6 (six) windows on east and south elevations, first and second floors. Existing windows are wood double hung 6/6 sash with true divided lights; replacement windows will match materials, dimensions and configuration."

PART III - DOCUMENTATION

***All applications require some level of documentation.** At minimum, Exhibits 1 and 2, a completed and signed application form, and photographs (35mm or digital) of the property are always required.

What additional information may be required depends on the scope of work: use the checklists in the PHDC Standards and Guidelines to determine how much information to submit. For example, if replacing a slate roof, you may need to submit only Exhibits 1, 2, 4 and 8. If adding a porch, you might submit Exhibits 1, 2, 3 and 5.

The PHDC staff reviews each application for completeness of documentation, and may ask for further documentation if needed. The PHDC may also request additional information before making a decision at a public hearing.

PART IV - MISCELLANEOUS

Check the **first box** if the application is being filed in response to notice from the PHDC that work has been done without prior PHDC approval, or which is not consistent with a previous Certificate of Appropriateness.

Check the **second box** if the project will also require zoning variances. Zoning review usually occurs after PHDC review. Any changes to an approved project resulting from zoning review must be submitted back to the PHDC for approval.

Check the **third box** if an expert witness will appear at the public hearing. An expert witness is not required.

Check the **fourth box** if applying for tax credits from the Rhode Island Historical Preservation & Heritage Commission.

Check the **fifth box** if a person representing the owner or the applicant will appear at the hearing. All applications reviewed at a public hearing must be presented by the applicant, the owner, or a representative. The representative should be authorized to negotiate with the PHDC regarding any changes to the proposal. An attorney's presence is not required.

CITY OF PROVIDENCE

Jorge O. Elorza, Mayor

APPLICATION PROCEDURES

The following procedures are to be followed whenever a property owner decides to do exterior work to a property located in one of the following of Providence's local historic districts: Armory, Broadway, College Hill, North Elmwood, PLD-Residential, PLD-ICBD, South Elmwood and Stimson Avenue. Application forms, standards and guidelines, maps and other information are available from the PHDC staff.

1. **Confirm that the property is located within a local historic district and that the proposed work will require review.** Contact the PHDC staff at jmartin@providenceri.com or 401.680.8517.

2. **Arrange a site visit with staff to discuss the proposed work.** Consultation with PHDC staff and a site visit are recommended before filling an application.

3. **File an application for certificate of appropriateness.** Applications may be prepared by the property owner or a representative, but must be signed by the property owner. Applications must be filed in person by appointment with the PHDC staff by the published filing deadline before a scheduled PHDC meeting. The PHDC yearly meeting schedule is available at the PHDC's website (www.providenceri.com/planning) or from the PHDC staff. Refer to the checklists in the Standards and Guidelines to make sure all necessary information accompanies the application when it is filed. Incomplete applications cannot be reviewed and may cause delays in the review process.

4. **Staff determines if the application is complete.** If the application is complete, it is accepted for review. If the application is not complete, staff informs the applicant what additional information will be required. The official review period does not begin until the application is complete and accepted for review. Acceptance of an application does not preclude the PHDC from requesting any additional information that may help it to make a determination on the application.

5. **Staff determines how the application will be reviewed: in-house by staff or at a public hearing before the PHDC.** See the Standards and Guidelines for a list of work items that may be reviewed in-house by staff. If the staff finds that it cannot approve an application for work normally reviewed in-house, that application will be directed to the PHDC for review at the next available public hearing. The PHDC meets regularly on the 4th Monday of each month. Most applications will require only one hearing; however, proposals for demolition and new construction will most likely require more than one hearing.

(Over, please)

DEPARTMENT OF PLANNING AND DEVELOPMENT
444 Westminster Street, Providence, Rhode Island 02903
401 680 8400 ph | 401 680 8492 fax
www.providenceri.gov

6. **The application is reviewed and a determination made, within 45 days of acceptance of the application.**

    a) In-house review: Staff will make a site visit to review the proposal before issuing any approval. Determinations can usually be made within five (5) days of acceptance of complete application. All approvals are issued in writing.

    b) Public hearing: An agenda is mailed to applicants, owners, abutters, and PHDC members seven (7) days before the hearing; it lists the time and place of the hearing, and the order in which applications will be heard. Staff also prepares a written report on each application, which is distributed to PHDC members before the hearing and is available to applicants upon request. Applicants are required to attend the hearing to present the proposal to the PHDC. Public comment is taken. The testimony of applicants, owners, and other interested parties is sworn. After all testimony is received, the PHDC deliberates the proposal and makes a determination to approve as submitted, approve with conditions, or deny. (An application may also be continued to a future PHDC meeting, with the applicant's consent, if additional information is needed.) After the hearing, a written resolution describing the decision is mailed to the applicant.

7. **If the application is approved**, a Certificate of Appropriateness (CA) placard and two sets of all accompanying drawings are stamped, signed, and will be mailed to applicants or are available for pick-up from the Department of Planning and Development, 444 Westminster Street, Suite 3A, Providence, RI 02903.

It is the applicant's responsibility to obtain all necessary building permits and zoning variances for the project. A copy of the CA will need to be presented at the Department of Inspection and Standards (DIS), 444 Westminster Street, Providence, RI, 02903, for any necessary permits. Building permits for exterior work within historic districts cannot be issued until PHDC approval has been obtained.

A Certificate of Appropriateness placard must be displayed on the property where the work will occur. Certificates of Appropriateness are valid only for the work specifically approved. Any changes to the project which result from other reviews, or which are made during construction, must be brought back to the PHDC for approval prior to commencing work. Certificates are valid for one (1) year, and may be extended upon request.

8. **If the application is not approved,** the decision may be appealed. Appeals of PHDC decisions are made to the Zoning Board of Appeal (which will review only whether the PHDC made a procedural error or had sufficient evidence to make its decision). Without substantial changes, a denied application may not be resubmitted for one year from the date of the decision.

9. **A permanent record of each application is retained in the PHDC's files.**

CITY OF PROVIDENCE
Jorge O. Elorza, Mayor

Application Addendum, Major Alteration – Windows

Windows are a vitally important feature of historic homes. The Commission considers the appearance of original and/or historically significant windows as well as the fabric of these windows to be a primary consideration in the allowance of their replacement. The replacement of original and/or or historically significant windows is considered a last resort by the Commission. Applicants should keep this in mind when considering replacing original and/or historically significant windows.

The number, location, size, and glazing pattern of original windows as well as unique features such as curved or bent glass, stained glass, leaded glass, and unusual shapes are to be preserved wherever possible. Where preservation of the unique features is not possible recreation of these elements (in-kind) will be reviewed by staff. Deviation from the original design must be reviewed by the full Commission.

Windows may often be repaired rather than replaced; even if some windows are deteriorated beyond repair, it is seldom necessary to replace all windows in a building. Historic wood windows that are properly repaired, caulked and weather-stripped and provided with well fitted storm windows can be as energy efficient as new thermal (double-glazed) windows. Applicants wishing to remove original and/or historically significant windows should contact a qualified contractor who has experience with window restoration to assist in the determination of the feasibility of retaining original and/or historically significant windows or whether replacement is appropriate.

Window Replacement: Where replacement is necessary due to deterioration, new windows should match the originals in design, dimensions, configuration and number of panes. Replacement windows are to be wood or aluminum clad wood. Frame-within-a-frame window systems and vinyl or vinyl-clad wood windows can close down a window opening with heavy frames, do not comply with historic profiles and will not be permitted.

Process: Applications seeking the replacement of historically significant windows must be heard by the full Commission at a regularly scheduled meeting. Applicants may apply for either Conceptual or Final Approval. Conceptual Approval requires less documentation and will give the applicant direction as to the feasibility of replacement windows being allowed. If Conceptual Approval is granted, the applicant will be instructed to return to the Commission with additional documentation in order to determine Final Approval. This process takes a minimum of two meetings by the Commission. Those applicants seeking Final Application need to submit full documentation and the review process may be completed at one meeting, although it is not uncommon for window applications to take a longer period of time.

Required Documentation: Applications seeking Final Approval for window replacement shall provide the following documentation. An application will not be considered complete and scheduled for a hearing until all documentation has been submitted and accepted:

1. A completed application form for a Certificate of Appropriateness, signed by the applicant and the property owner (if different) describing existing conditions, and the scope of the proposed work;

DEPARTMENT OF PLANNING + DEVELOPMENT
444 Westminster Street, Providence, Rhode Island 02903
401 680 8400 ph | 401 680 8492 fax
www.providenceri.com

2. A professional evaluation of the existing window's condition and options for repair or replacement by a qualified contractor who has experience with historic windows;
3. A photographic survey showing all windows to be replaced. These photos are to clearly document window location on the structure, window type and configuration of panes;
4. Clearly labeled to-scale drawings showing the existing windows and the proposed windows with each replacement window type keyed to scaled elevation drawings or photographs or the photo survey;
5. Horizontal & vertical sectional drawings depicting existing and proposed conditions at head, jamb and sill of each window type; and,
6. Manufacturer's specifications of the proposed replacement window.

Applicants have the option of applying for Conceptual Approval for window replacement as a preliminary step. In the Conceptual Approval process, the applicant must submit items 1, 2, 3 and 6. In this process the Commission will be able to give direction to the applicant as to the feasibility of replacement windows being approved or denied.

Front Elevation (East)
Second Floor - Original Wood Windows
First Floor - Vinyl Replacement Windows

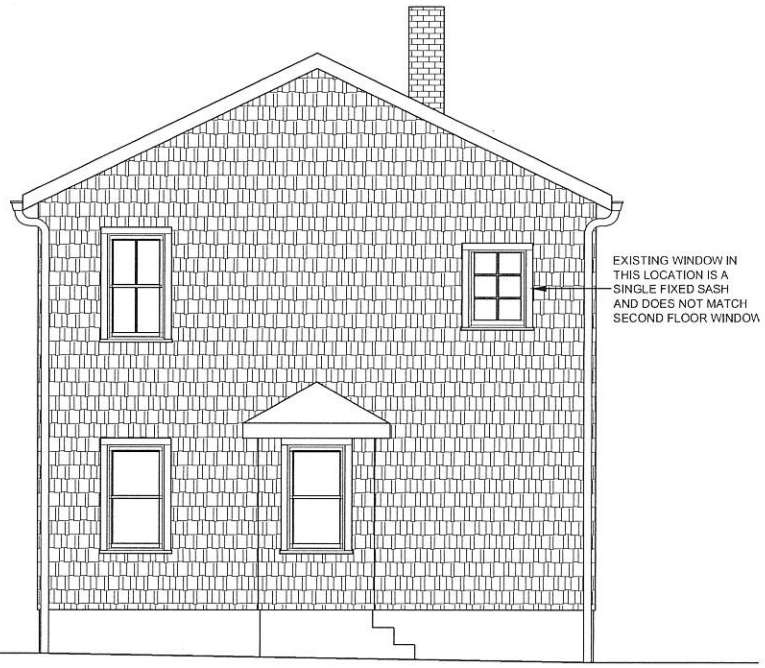

Side Elevation (South)
Second Floor - Original Wood Windows
First Floor - Vinyl Replacement Windows

Scale = $\frac{1}{8}$" = 1'-0"

Existing Windows
Olga Mesa and Aaron Brode
21 Bianco Court
Providence, RI 02909

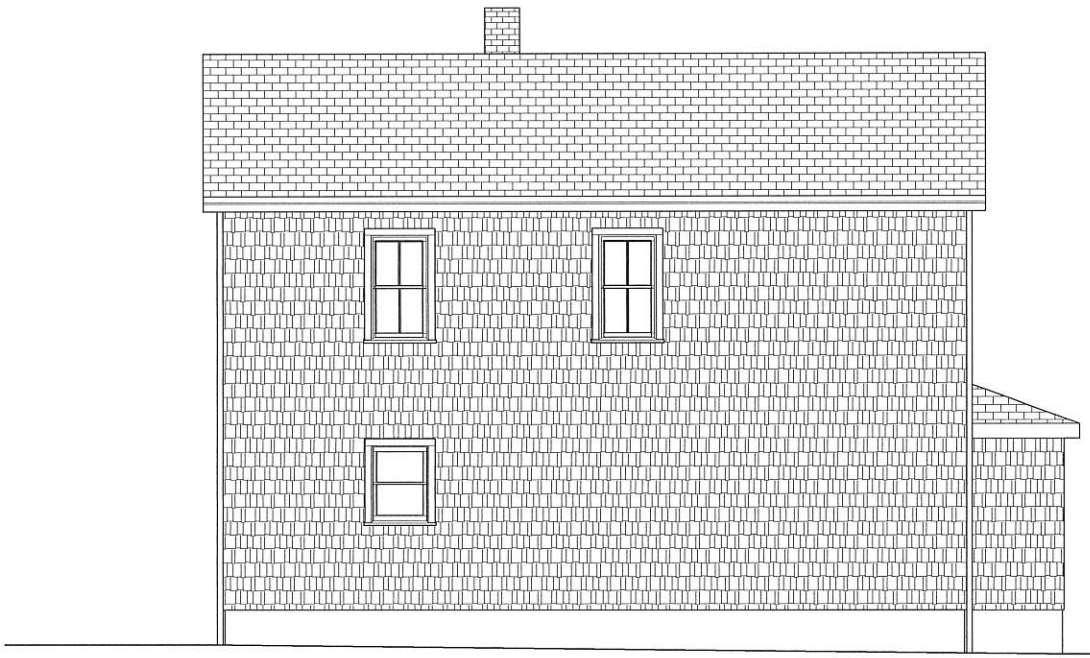

Back Elevation (West)
Second Floor - Original Wood Windows
First Floor - Vinyl Replacement Windows

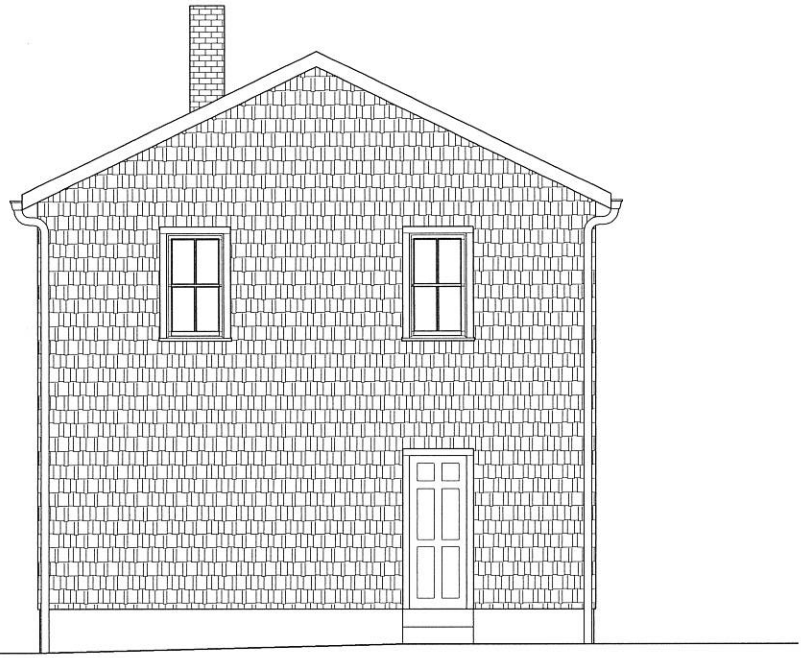

Side Elevation (North)
Second Floor - Original Wood Windows
First Floor - Vinyl Replacement Windows

Scale = $\frac{1}{8}$" = 1'-0"

Proposed
Olga Mesa and Aaron Brode
21 Bianco Court
Providence, RI 02909

Front Elevation (East)
Jeld Wen Historic Wood Windows

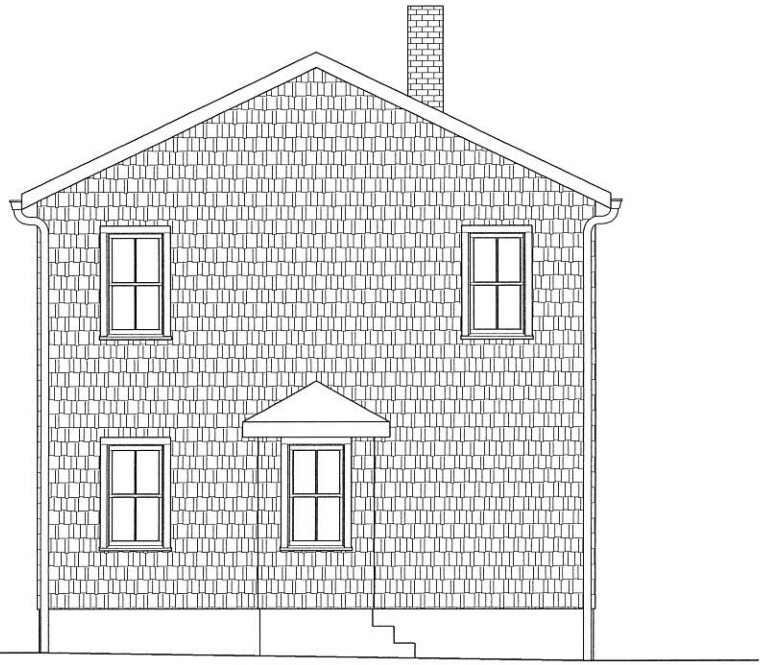

Side Elevation (South)
Jeld Wen Historic Wood Windows

Scale = $\frac{1}{8}$" = 1'-0"

Proposed Windows
Olga Mesa and Aaron Brode
21 Bianco Court
Providence, RI 02909

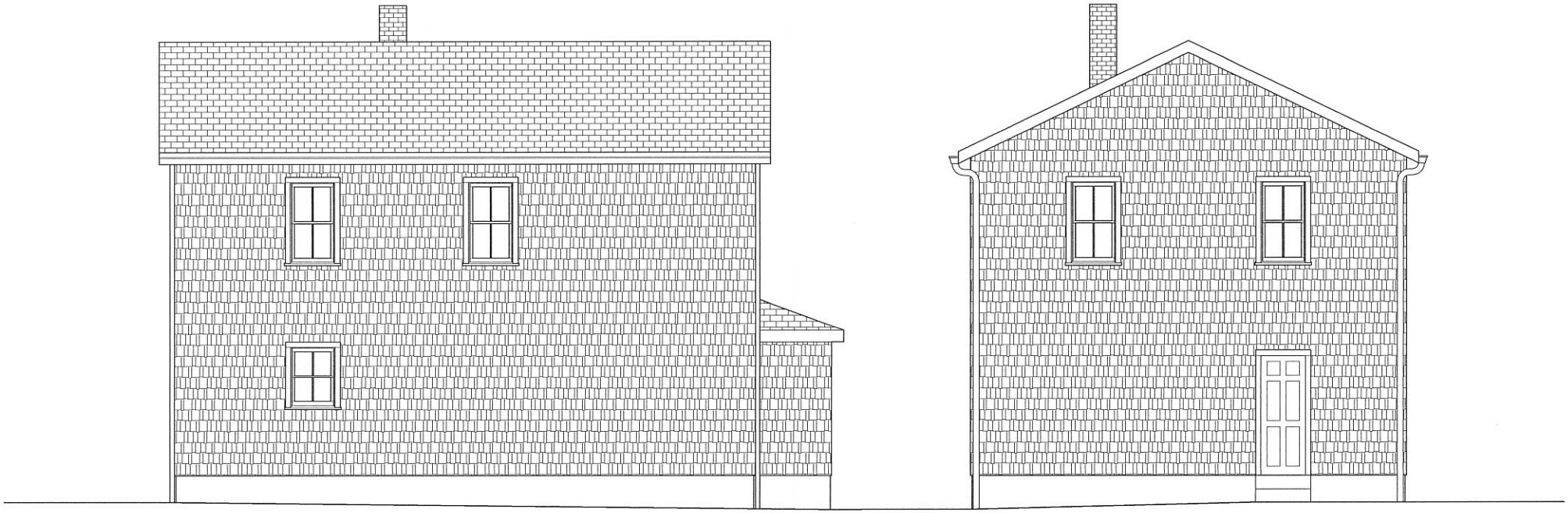

Back Elevation (West)
Jeld Wen Historic Wood Windows

Side Elevation (North)
Jeld Wen Historic Wood Windows

Scale = $\frac{1}{8}$" = 1'-0"

Proposed Windows
Olga Mesa and Aaron Brode
21 Bianco Court
Providence, RI 02909

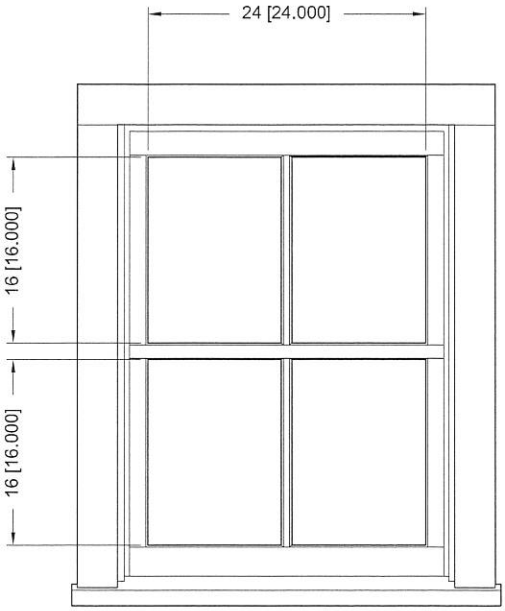

Proposed Window
Type B (1 Window)
Jeld Wen Historic Wood Window

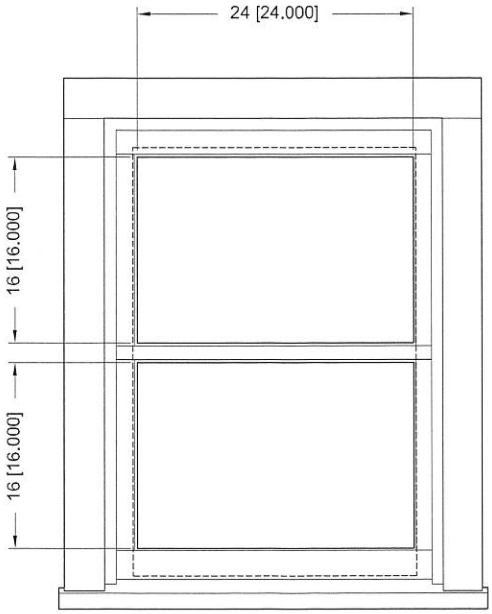

Existing Window
Type B
Jeld Wen Historic Wood Window

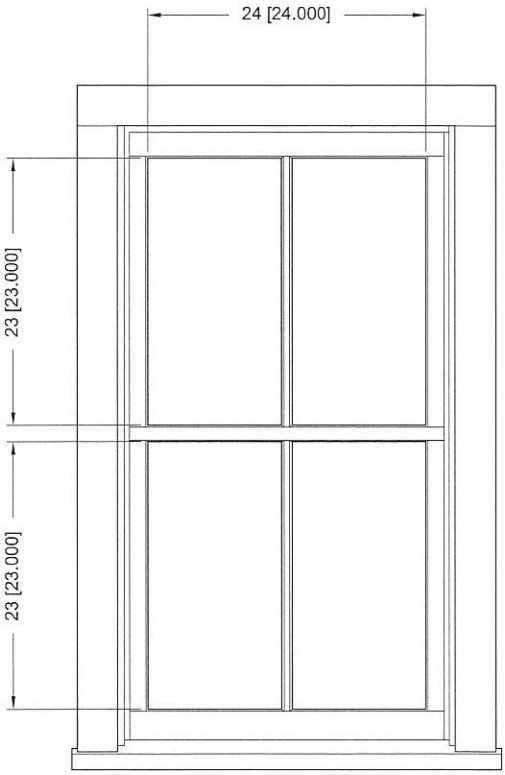

Proposed Window
Type A (14 Windows)
Jeld Wen Historic Wood Window

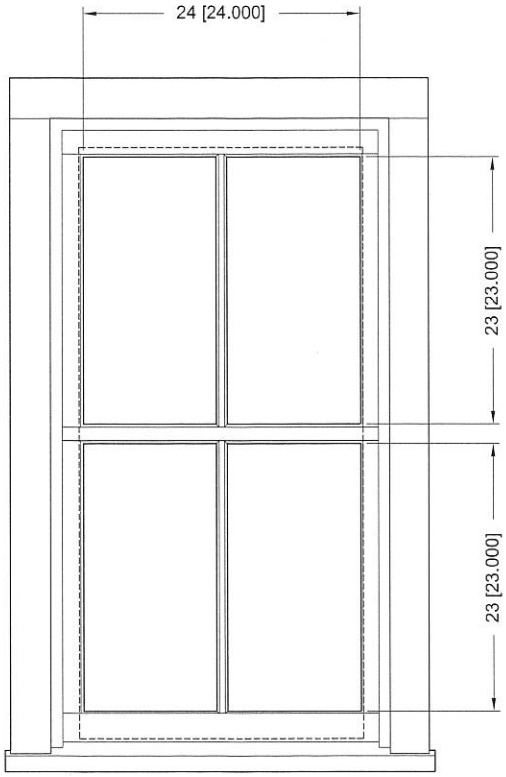

Existing Window
Type A
Jeld Wen Historic Wood Window

Scale : 3/4" = 1'-0"

Window Details
Olga Mesa and Aaron Brode
21 Bianco Court
Providence, RI 02909

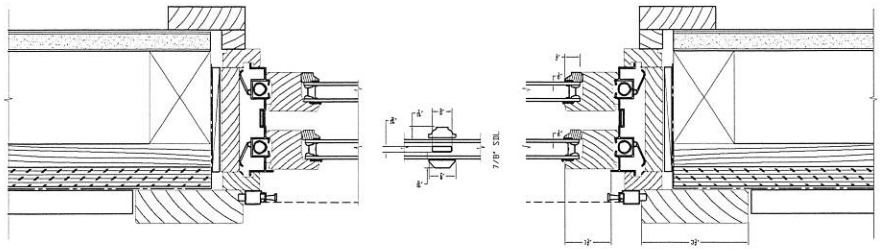

Horizontal Section
Jeld Wen Historic Wood Window

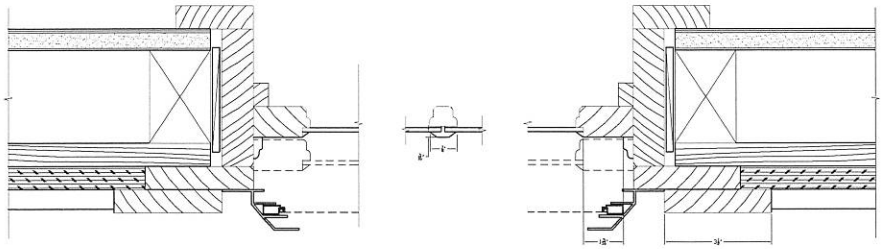

Horizontal Section
Existing Wood Window

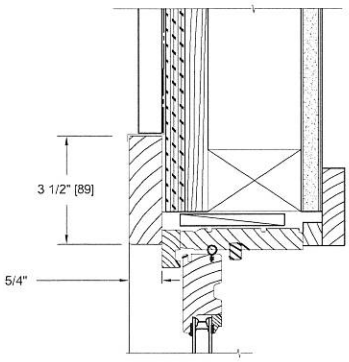

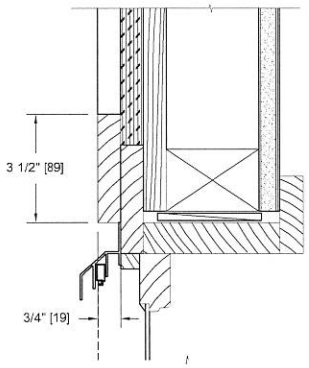

Note: Drawings of existing first floor windows are not included in this package. R/Os match second floor windows however original windows have been replaced with vinyl windows. It is assumed that the original windows on the first floor matched those on the second.

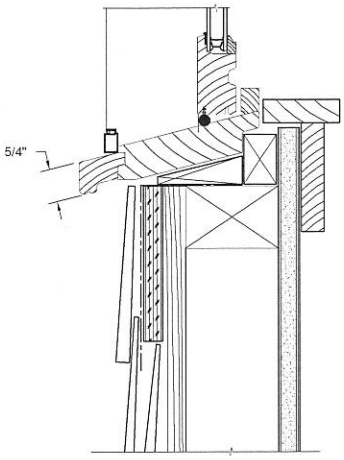

Vertical Section
Jeld Wen Historic Wood Window

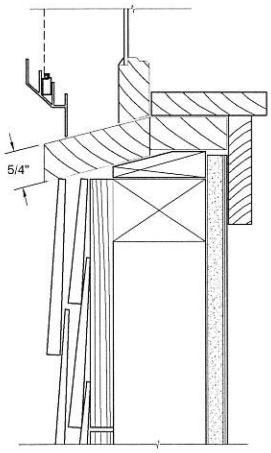

Vertical Section
Existing Wood Window

Scale : 2" = 1'-0"

Window Details
Olga Mesa and Aaron Brode
21 Bianco Court
Providence, RI 02909

CITY OF PROVIDENCE

Jorge O. Elorza, Mayor

LIST OF ABUTTERS

When an application for a Certificate of Appropriateness is to be reviewed at a public hearing, all owners of abutting properties must be given advance written notice of the hearing and an opportunity to comment on the application. This notice is required by law. Names and addresses of abutting property owners are supplied by applicants as part of the documentation for an application. This form may be used by applicants to provide this information.

An "abutter" is any property whose lot lines touch the lot lines of the property which is the subject of the application; streets are considered common property lines. At minimum, each property has four abutters: the two lots on either side, the lot directly behind, and the lot directly across the street. Abutters of corner properties include the lots on the three opposing corners, as well as properties to the side and rear of the subject property. Large or oddly shaped lots may have several abutters to the rear, sides, or across the street. Abutting lots which lie outside the plat in which the subject property is located must also be included.

To determine your abutting properties, consult the City of Providence plat maps, available at the Department of Planning and Development (444 Westminster Street, Suite 3A; telephone 401.680.8517) or the City Tax Assessor's Office (City Hall, 25 Dorrance Street; telephone 401.421.7440). Names and complete mailing addresses of abutters are to be taken from the most current records of the Tax Assessor and listed below; use additional sheets if necessary.

****

PLEASE PRINT OR TYPE

PROPERTY ADDRESS:_____ PLAT/LOT:_____

APPLICANT:_____ DISTRICT:_____

ABUTTERS:

Plat/Lot	Street Address	Owner Name and Address (include town, state, zip code)
_____	_____	_____
_____	_____	_____
_____	_____	_____
_____	_____	_____
_____	_____	_____

I confirm that to the best of my knowledge, this list includes all abutting properties affected by this application, and the owner information is derived from the most current records of the City Tax Assessor.

_____ _____

Applicant Signature Date

DEPARTMENT OF PLANNING AND DEVELOPMENT

444 Westminster Street, Providence, Rhode Island 02903

401 680 8400 ph | 401 680 8492 fax

www.providenceri.gov

CITY OF PROVIDENCE

Jorge O. Elorza, Mayor

ABUTTER WAIVER FOR PROPOSED FENCE ON INTERIOR LOT LINE

The Providence Historic District Commission regulates all exterior work to buildings, structures and appurtenances located within the city's seven designated local historic districts. In cases where installation or alteration of a fence along an interior lot line is proposed, the PHDC requires that the applicant for a Certificate of Appropriateness inform all affected abutting property owners of the proposal and obtain their approval of the proposed location, design and height of the fence, by signing where indicated below.

For the purposes of this notification only, an "abutter" is a property whose lot lines touch the side or rear lot lines of the property where the work will occur. Abutting properties should be identified using the official city plat maps, available at the Department of Planning and Development (444 Westminster Street, Suite 3A; telephone 680.8517) or the City Tax Assessor's Office (City Hall, 25 Dorrance Street; telephone 421.7440). Owner names are derived from the most current records of the City Tax Assessor.

Abutters who object to the proposal may attempt to work out a solution with the applicant; otherwise, the application will be scheduled for the next available public hearing so that comments may be heard. Comments may or may not influence the PHDC's decision on the application.

****

PLEASE PRINT OR TYPE

PROPERTY ADDRESS: _____ PLAT/LOT: _____

APPLICANT: _____ DISTRICT: _____

We, the undersigned, have reviewed the proposal to construct or alter a fence along an interior lot line of the above referenced property. By signing this form, we understand that we are expressing approval of the proposed height, design and location of said fence. (Attach additional pages if necessary.)

Plat/Lot	Street Address	Owner Name and Address (include town, state, zip code)
_____	_____	_____
_____	_____	_____
_____	_____	_____
_____	_____	_____

I confirm that to the best of my knowledge, this list includes all abutting properties affected by this application, and the owner information is derived from the most current records of the City Tax Assessor.

_____ _____

Applicant Signature Date

DEPARTMENT OF PLANNING AND DEVELOPMENT

444 Westminster Street, Providence, Rhode Island 02903

401 680 8400 ph | 401 680 8492 fax

www.providenceri.gov

CITY OF PROVIDENCE
Jorge O. Elorza, Mayor

SCHEDULE OF APPLICATION FEES
Effective 6/19/17

Under city ordinance (Chapter 2017-20, No. 280), as of June 19, 2017, filing fees will be charged for applications for Certificates of Appropriateness. Fees are set in the following categories:

No Fee **Repairs, replacements in-kind, restoration** of missing or altered features based on historical, documentary, pictorial or physical evidence.

$50.00 **Minor Alterations**, such as awnings, fences and gates, mechanical and electrical equipment, shutters and blinds, signs, site improvements, storm/screen windows and doors, etc.

$100.00 **Major Alterations**, such as additions, replacements not in-kind; changes to wall materials and surfaces, window and door openings, ornamentation, roof forms or elements, porches, stairs and entryways, grade levels and foundations, storefronts, fire escapes, barrier-free access improvements and public amenities.

$400.00 **New construction, demolition**, including moving of structures.

Fees may be paid by check or money order, made payable to the "Providence City Collector."
Cash will not be accepted.

DEPARTMENT OF PLANNING AND DEVELOPMENT
444 Westminster Street, Providence, Rhode Island 02903
401 680 8400 ph | 401 680 8492 fax
www.providenceri.gov