BOARD OF CONTRACT AND SUPPLY
CITY OF PROVIDENCE, RHODE ISLAND

REQUEST FOR PROPOSALS

Item Description: **REPLACEMENT/REHABILITATION OF WATER MAINS AND APPURTENANCES WITHIN PROVIDENCE WATER'S DISTRIBUTION SYSTEM - UPPER SOUTH PROVIDENCE (PLAIN ST.) CONTRACT 4-21 (EXP. 12/31/21)**

Date to be opened: **2:15 P.M. ON TUESDAY, OCTOBER 13, 2020**

Issuing Department: PROVIDENCE WATER SUPPLY BOARD

QUESTIONS

- Please direct questions relative to the bidding process, how to fill out forms, and how to submit a bid (Pages 1-8) to Purchasing Agent Patti Jordan.
  - Phone: (401) 680-5264
  - Email: pjordan@providenceri.gov
    - Please use the subject line "**RFP Question**"
- Please direct questions relative to the Minority and Women's Business Enterprise Program and the corresponding forms (Pages 9-13) to the MBE/WBE Outreach Director for the City of Providence, Grace Diaz
  - Phone: (401) 680-5766
  - Email: gdiaz@providenceri.gov
    - Please use subject line "**MBE WBE Forms**"
- Please direct questions relative to the specifications outlined (beginning on page 14) to the issuing department's subject matter expert:
  - **NORMAN RIPSTEIN, PRINCIPAL ENGINEER**
  - **(401) 521-6300, EXT. 7212**
  - **NORMANR@PROVWATER.COM**

PRE-BID CONFERENCE

A virtual Pre-Bid Conference will be held at 9:30 a.m. on September 30, 2020, via the GoToMeeting online meeting platform. Bidders are not required to attend and participate in the Pre-Bid Conference, however attendance is strongly recommended.

GoToMeeting Access Instructions:

Please join from your computer, tablet or smartphone. https://global.gotomeeting.com/join/230336525
You can also dial in using your phone. United States: +1 (872) 240-3311 Access Code: 230-336-525
New to GoToMeeting? Get the app: https://global.gotomeeting.com/install/230336525

IMPORTANT NOTE TO BIDDERS

DUE TO FILE SIZE, THE COMPLETE BID PACKAGE IS NOT AVAILABLE FOR DOWNLOAD. TO OBTAIN A COMPLETE BID PACKAGE CONTACT:
PATRICIA JORDAN
PURCHASING DEPT. ROOM 408, PROVIDENCE CITY HALL
PHONE: 401-680-5264; EMAIL: PJORDAN@PROVIDENCERI.GOV

BOARD OF CONTRACT AND SUPPLY
CITY OF PROVIDENCE, RHODE ISLAND

INSTRUCTIONS FOR SUBMISSION

Bids may be submitted up to **2:15 P.M.** on the above meeting date at the **Department of the City Clerk. Room 311, City Hall. 25 Dorrance Street, Providence.** At 2:15 P.M. all bids will be publicly opened and read at the Board of Contract Meeting in the City Council Chambers, on the 3rd floor of City Hall.

- Bidders must submit **2 copies** of their bid in sealed envelopes or packages labeled with the captioned **Item Description** and the **City Department to which the RFP and bid are related**. (On page 1)
- Communications to the Board of Contract and Supply that are not competitive sealed bids (i.e. product information/samples) should have "**NOT A BID**" written on the envelope or wrapper.
- Only use form versions and templates included in this RFP. If you have an old version of a form do not recycle it for use in this bid.
- The bid envelope and information relative to the bid must be addressed to:

Board of Contract and Supply
Department of the City Clerk – City Hall, Room 311
25 Dorrance Street
Providence, RI 02903

****PLEASE NOTE: This bid may include details regarding information that you will need to provide (such as proof of licenses) to the issuing department before the formalization of an award.**

This information is NOT requested to be provided in your initial bid by design.

All bids submitted to the City Clerk become public record. Failure to follow instructions could result in information considered private being posted to the city's Open Meetings Portal and made available as a public record. The City has made a conscious effort to avoid the posting of sensitive information on the City's Open Meetings Portal, by requesting that such sensitive information be submitted to the issuing department only at their request.

BOARD OF CONTRACT AND SUPPLY
CITY OF PROVIDENCE, RHODE ISLAND

BID PACKAGE CHECKLIST

Digital forms are available in the City of Providence Purchasing Department Office or online at **http://www.providenceri.gov/purchasing/how-to-submit-a-bid/**

The bid package **MUST** include the following, in this order:

- Bid Form 1: Bidder's Blank as the cover page/ 1st page (*see page **6** of this document*)
- Bid Form 2: Certification of Bidder as 2nd page (*see page **7** of this document*)
- Bid Form 3: Bidder Certification - 50% Performance of Work as 3rd page (*see page **7-1** of this document*)
- Certificate Regarding Public Records (*see page **8** of this document)*
- Forms from the Minority and Women Business Enterprise Program: Based on Bidder Category. *See forms and instructions enclosed (pages **9-13**) or on: https://www.providenceri.gov/purchasing/minority-women-owned-business-mbewbe-procurement-program/*

***Please note: MBE/WBE forms must be completed for EVERY bid submitted and must be inclusive of ALL required signatures. Forms without all required signatures will be considered incomplete.**

- Bidder's Proposal/Packet: Formal response to the specifications outlined in this RFP, including pricing information and details related to the good(s) or service(s) being provided. Please be mindful of formatting responses as requested to ensure clarity.
- Financial Assurance, *if requested* (as *indicated on page 5 of this document under "Bid Terms")*

All of the above listed documents are REQUIRED. (With the exception of financial assurances, which are only required if specified on page 5.)

******Failure to meet specified deadlines, follow specific submission instructions, or enclose all required documents with all applicable signatures will result in disqualification, or in an inability to appropriately evaluate bids.***

BOARD OF CONTRACT AND SUPPLY
CITY OF PROVIDENCE, RHODE ISLAND

NOTICE TO VENDORS

1. The Board of Contract and Supply will make the award to the lowest qualified and responsible bidder.
2. In determining the lowest responsible bidder, cash discounts based on preferable payment terms will not be considered.
3. Where prices are the same, the Board of Contract and Supply reserves the right to award to one bidder, or to split the award.
4. No proposal will be accepted if the bid is made in collusion with any other bidder.
5. Bids may be submitted on an "equal in quality" basis. The City reserves the right to decide equality. Bidders must indicate brand or the make being offered and submit detailed specifications if other than brand requested.
6. A bidder who is an out-of-state corporation shall qualify or register to transact business in this State, in accordance with the Rhode Island Business Corporation Act, RIGL Sec. 7-1.2-1401, et seq.
7. The Board of Contract and Supply reserves the right to reject any and all bids.
8. Competing bids may be viewed in person at the Department of the City Clerk, City Hall, Providence, immediately upon the conclusion of the formal Board of Contract and Supply meeting during which the bids were unsealed/opened. Bids may also be accessed electronically on the internet via the City's Open Meetings Portal.
9. As the City of Providence is exempt from the payment of Federal Excise Taxes and Rhode Island Sales Tax, prices quoted are not to include these taxes.
10. In case of error in the extension of prices quoted, the unit price will govern.
11. The contractor will **NOT** be permitted to: a) assign or underlet the contract, or b) assign either legally or equitably any monies or any claim thereto without the previous written consent of the City Purchasing Director.
12. Delivery dates must be shown in the bid. If no delivery date is specified, it will be assumed that an immediate delivery from stock will be made.
13. A certificate of insurance will normally be required of a successful vendor.
14. For many contracts involving construction, alteration and/or repair work, State law provisions concerning payment of prevailing wage rates apply (RIGL Sec. 37-13-1 et seq.)
15. No goods should be delivered or work started without a Purchase Order.
16. **Submit 2 copies of the bid to the City Clerk, unless the specification section of this document indicates otherwise.**
17. Bidder must certify that it does not unlawfully discriminate on the basis of race, color, national origin, gender, gender identity or expression, sexual orientation and/or religion in its business and hiring practices and that all of its employees are lawfully employed under all applicable federal, state and local laws, rules and regulations. (See Bid Form 2.)
18. This project is also subject to the application of American Iron and Steel requirements to the FY 2021 and FY 2022 Drinking Water State Revolving Fund Assistance Agreements, as administered by the Environmental Protection Agency (EPA). Reference is made to Appendix E of the Contract Specifications for the USEPA Memorandum, dated April 7, 2017.

BOARD OF CONTRACT AND SUPPLY
CITY OF PROVIDENCE, RHODE ISLAND

BID TERMS

1. Financial assurances may be required in order to be a successful bidder for Commodity or Construction and Service contracts. If either of the first two checkboxes below is checked, the specified assurance **must accompany** a bid, or the bid will not be considered by the Board of Contract and Supply. The third checkbox indicates the lowest responsible bidder will be contacted and required to post a bond to be awarded the contract.

   a) ☒ A certified check for **$25,000.00** must be deposited with the City Clerk as a guarantee that the Contract will be signed and delivered by the bidder.

   OR

   b) ☒ A bid bond in the amount of **$50,000.00** must be deposited with the City Clerk as a guarantee that the contract will be signed and delivered by the bidder; and the amount of such bid bond shall be retained for the use of the City as liquidated damages in case of default.

   c) ☒ A performance and payment bond with a satisfactory surety company will be posted by the bidder in a sum equal to one hundred per centum (100%) of the awarded contract.

   d) ☐ No financial assurance is necessary for this item.

2. Recommendation for Award will be made within **sixty (60) days of bid opening**. All bid prices will be considered firm, unless qualified otherwise. Requests for price increases will not be honored.
3. Failure to deliver within the time quoted or failure to meet specifications may result in default in accordance with the general specifications. It is agreed that deliveries and/or completion are subject to strikes, lockouts, accidents and Acts of God.

The following entry applies only for COMMODITY BID TERMS:

4. Payment for partial delivery will not be allowed except when provided for in blanket or term contracts.

The following entries apply only for CONSTRUCTION AND SERVICE BID TERMS:

5. Only one shipping charge will be applied in the event of partial deliveries for blanket or term contracts.
6. Prior to commencing performance under the contract, the successful bidder shall attest to compliance with the provisions of the Rhode Island Worker's Compensation Act, RIGL 28-29-1, et seq. If exempt from compliance, the successful bidder shall submit a sworn Affidavit by a corporate officer to that effect, which shall accompany the signed contract.
7. Prior to commencing performance under the contract, the successful bidder shall, submit a certificate of insurance, in a form and in an amount satisfactory to the City.

BOARD OF CONTRACT AND SUPPLY
CITY OF PROVIDENCE, RHODE ISLAND

BID FORM 1: Bidders Blank

1. Bids must meet the attached specifications. Any exceptions or modifications must be noted and fully explained.
2. Bidder's responses must be in ink or typewritten, and all blanks on the bid form should be completed.
3. The price or prices proposed should be stated both in **WRITING** and in **FIGURES**, and any proposal not so stated may be rejected. **Contracts exceeding twelve months must specify annual costs for each year.**
4. Bids **SHOULD BE TOTALED** so that the final cost is clearly stated (unless submitting a unit price bid), however **each item should be priced individually**. Do not group items. Awards may be made on the basis of ***total*** bid or by ***individual items***.
5. All bids **MUST BE SIGNED IN INK**.

Name of Bidder (Firm or Individual): _____

Contact Name: _____

Business Address: _____

Business Phone #: _____

Agrees to bid on (Items(s) to be bid): _____

CONTRACT 4-21, UPPER SOUTH PROVIDENCE (PLAIN ST.), PROVIDENCE
SECTION 00410 - BID FORM CLEANING & LINING

Part 1 – Unit Rates for Water Main Replacement and Rehab. Work and Earth Work & Restoration within Private & Public Space
Part 2 – Unit Rates for Service Abandonments
Part 3 – Unit Rates for Replacement of Lead Services - Private Property ONLY
Part 4 – Miscellaneous Unit Prices for Additional Work not specified in Parts 1, 2, or 3
Part 5 – Labor and Equipment Rates for Additional Work not specified in Parts 1, 2, or 3

If the bidder's company is based in a state other than Rhode Island, list name and contact information for a local agent for service of process that ***is located <u>within</u> Rhode Island***: _____

Please visit http://www.naics.com/search/ and identify the NAICS Code(s) for items being bid on. Enter the NAICS code(s) here or in parentheses next to each item listed immediately above: <u>237110 "Water and Sewer Line and Related Structures Construction"</u>

Delivery Date (when applicable): _____

Name of Surety Company (if applicable): _____

Total Amount in Writing*: _____

Total Amount in Figures*: _____

****If you are submitting a unit price bid please insert "Unit Price Bid."***

Use additional pages if necessary for additional bidding details.

( ) Acknowledge receipt of all Addenda to the Specifications
( ) Conforms to Specifications
( ) Modifications to Specifications. If yes, Please note
( ) Required MBE/WBE Forms submitted with Bid
( ) Bidder Certification, 50% Performance of Work

_____
Signature of Representative

_____
Title

BOARD OF CONTRACT AND SUPPLY
CITY OF PROVIDENCE, RHODE ISLAND

BID FORM 2: Certification of Bidder
(Non-Discrimination/Hiring)

Upon behalf of_____(Firm or Individual Bidding),

I,_____(Name of Person Making Certification),

being its_____(Title or "Self"), hereby certify that:

1. Bidder does not unlawfully discriminate on the basis of race, color, national origin, gender, sexual orientation and/or religion in its business and hiring practices.
2. All of Bidder's employees have been hired in compliance with all applicable federal, state and local laws, rules and regulations.

I affirm by signing below that I am duly authorized on behalf of Bidder, on

this_____day of_____20____.

_____
Signature of Representative

_____
Printed Name

BID FORM 3: Bidder Certification
(50% Performance of Work)

Upon behalf of_____(Bidder's Name),

I,_____(Name of Person Making Certification),

being its_____(Title or "Self"), hereby certify that:

1. Bidder shall perform at least fifty (50) percent of this Work with their own forces. Fifty percent of the work must include the cleaning and lining of water mains (if bid for cleaning and lining) or cast iron replacement (if bid for replacement) and shall be completed by the Bidder (General Contractor) alone.

I affirm by signing below that I am duly authorized on behalf of Bidder,

on this_____day of_____20____.

_____
Signature of Representative

_____
Printed Name

BOARD OF CONTRACT AND SUPPLY

CITY OF PROVIDENCE, RHODE ISLAND

Certificate Regarding Public Records

Upon behalf of_____(Firm or Individual Bidding),

I,_____(Name of Person Making Certification),

being its_____(Title or "Self"), hereby certify an

understanding that:

1. All bids submitted in response to Requests for Proposals (RFP's) and Requests for Qualification (RFQ's), documents contained within, and the details outlined on those documents become public record upon receipt by the City Clerk's office and opening at the corresponding Board of Contract and Supply (BOCS) meeting.
2. The Purchasing Department and the issuing department for this RFP/RFQ have made a conscious effort to request that sensitive/personal information be submitted directly to the issuing department and only at request if verification of specific details is critical the evaluation of a vendor's bid.
3. The requested supplemental information may be crucial to evaluating bids. Failure to provide such details may result in disqualification, or an inability to appropriately evaluate bids.
4. If sensitive information that has not been requested is enclosed or if a bidder opts to enclose the defined supplemental information prior to the issuing department's request in the bidding packet submitted to the City Clerk, the City of Providence has no obligation to redact those details and bears no liability associated with the information becoming public record.
5. The City of Providence observes a public and transparent bidding process. Information required in the bidding packet may not be submitted directly to the issuing department at the discretion of the bidder in order to protect other information, such as pricing terms, from becoming public. Bidders who make such an attempt will be disqualified.

I affirm by signing below that I am duly authorized on behalf of Bidder, on

this_____day of_____20____.

_____

Signature of Representative

_____

Printed Name

CITY OF PROVIDENCE
MINORITY AND WOMEN BUSINESS ENTERPRISE PROGRAM
BIDDER INFORMATION AND FORMS

The City of Providence actively seeks Minority and Women business enterprises to participate in bids to meet the City's procurement needs. Pursuant to the City of Providence Code of Ordinances, Chapter 21, Article II, Sec. 21-52 (Minority and Women's Business Enterprise) and Rhode Island General Laws (as amended), Chapter 31-14, et seq. (Minority Business Enterprise), Minority Business Enterprise (MBE) and Women's Business Enterprise (WBE) participation goals apply to contracts.

The goal for Minority Business Enterprise (MBE) participation is **10%** of the total bid value.
The goal for Women's Business Enterprise (WBE) participation is **10%** of the total bid value.
The goal for combined MBE/WBE participation is **20%** of the total bid value.

Only businesses certified with the State of Rhode Island as minority and/or women business enterprises are counted towards the City's goals. Eligible minority or women-owned businesses are encouraged to seek certification from the State of Rhode Island Minority Business Enterprise Compliance Office at: http://odeo.ri.gov/offices/mbeco/

Note: MBE certification with the State of Rhode Island on the basis of Portuguese heritage is not currently recognized by the City of Providence's MBE program.

Bid Requirements:

All Bidders: All bidders must complete and submit the ***MBE/WBE Participation Affidavit*** indicating whether or not they are a state-certified MBE/WBE and acknowledging the City's participation goals. Submission of this form is required with **every bid**. Your bid will not be accepted without an affidavit.

Bidders who will be subcontracting: Bidders who will be subcontracting must submit the ***Subcontractor Disclosure Form*** as part of their bid submission. All subcontractors, regardless of MBE/WBE status, must be listed on this form. Business NAICS codes can be found at https://www.naics.com/search/. Awarded bidders are required to submit ***Subcontractor Utilization and Payment Reports*** with each invoice.

Waiver Requests:

If the percentage of the total amount of the bid being awarded to MBE or WBE vendors is less than 20% (Box F on the Subcontractor Disclosure Form) and the prime contractor is not a Rhode Island State-certified MBE or WBE, the Bidder must complete the *MBE/WBE Waiver Request Form* for review. Waivers will be considered on a case by case basis.

No waiver will be granted unless the waiver request includes documentation that demonstrates that the Bidder has made good faith efforts to achieve the City's stated participation goals. Waivers must be reviewed and signed by the City of Providence's MBE/WBE Outreach Director, Grace Diaz, or her designee. Department Directors cannot recommend a bidder for award if this form is applicable and absent. If the bid does not meet the participation goals of the City of Providence and a waiver is not filed with the signature of the MBE/WBE Outreach Director or her designee, the bid will not be accepted.

Verifying MBE/WBE Certification

It is the responsibility of the bidder to confirm that every MBE/WBE named in a proposal and included in a contract is certified by the Rhode Island Minority Business Enterprise Compliance office. The current MBE/WBE directory is available at the State of RI MBE Office, One Capitol Hill, 2nd Floor, Providence, RI, or online at http://odeo.ri.gov/offices/mbeco/mbe-wbe.php. You can also call (401) 574-8670 to verify certification, expiration dates, and services that the MBE/WBE is certified to provide. Note: MBE certification with the State of Rhode Island on the basis of Portuguese heritage is not currently recognized by the City of Providence's MBE program.

Form Instructions:

Access all bid forms from http://www.providenceri.gov/oeo/ or http://www.providenceri.gov/purchasing/minority-women-owned-business-mbewbe-procurement-program/. **Download** the forms as blank PDFs. Once saved on your computer, fill them out using the Adobe program. The fillable PDFs must be completed in Adobe in order to be saved property. Google Chrome and similar platforms do not allow for the forms to be saved as filled PDFs. Therefore, please download the blank forms to your computer, then fill them out and save.

Assistance with Form Requirements

Examples of completed forms can be found on the City of Providence website at http://www.providenceri.gov/oeo/ or http://www.providenceri.gov/purchasing/minority-women-owned-business-mbewbe-procurement-program/.

Contract Requirements:

Prime contractors engaging subcontractors must submit the ***Subcontractor Utilization and Payment Report*** to the City Department's Fiscal Agent with every invoice and with request for final payment. This form is not submitted as a part of the initial bid package.

For contracts with duration of less than 3 months, this form must be submitted along with the contractor's request for final payment. The form must include all subcontractors utilized on the contract, both MBE/WBE and non- MBE/WBE, the total amount paid to each subcontractor for the given period and to date. During the term of the contract, any unjustified failure to comply with the MBE/WBE participation requirements is a material breach of contract.

Questions?

For more information or for assistance with MBE/WBE Forms, contact the City of Providence MBE/WBE Outreach Director, Grace Diaz, at mbe-wbe@providenceri.com or (401) 680-5766.

MBE/WBE PARTICIPATION AFFIDAVIT

Item Description (as seen on RFP):

_____

_____

_____

Prime Bidder: _____

Prime Bidder (Company) Phone Number:_____

Prime Bidder (Company) Zip Code: _____

Which one of the following describes your business' status in terms of Minority and/or Woman-Owned Business Enterprise certification with the State of Rhode Island? _____MBE _____WBE _____Neither MBE nor WBE

By initialing the following sections and signing the bottom of this document in my capacity as the contractor or an authorized representative of contractor, I make this Affidavit:

It is the policy of the City of Providence that minority business enterprises (MBEs) and women business enterprises (WBEs) should have the maximum opportunity to participate in procurements and projects as prime contractors and vendors. Pursuant to Sec. 21-52 of the Providence Code of Ordinances and Chapter 31-14 *et seq.* of the Rhode Island General Laws (as amended), MBE and WBE participation goals apply to contracts.

The goal for Minority Business Enterprise (MBE) participation is 10% of the total bid value.
The goal for Women's Business Enterprise (WBE) participation is 10% of the total bid value.
The goal for combined MBE/WBE participation is 20% of the total bid value.

I acknowledge the City of Providence's goals of supporting MBE/WBE certified businesses. Initial _____

If awarded the contract, I understand that my company must submit to the Minority and Women's Business Coordinator at the City of Providence (MBE/WBE Office), copies of all executed agreements with the subcontractor(s) being utilized to achieve the participation goals and other requirements of the RI General Laws. **I understand that these documents must be submitted prior to the issuance of a notice to proceed**. Initial _____

I understand that, if awarded the contract, my firm must submit to the MBE/WBE Office canceled checks and reports required by the MBE/WBE Office on a quarterly basis verifying payments to the subcontractors(s) utilized on the contract. Initial _____

If I am awarded this contract and find that I am unable to utilize the subcontractor(s) identified in my Statement of Intent, I understand that I must substitute another certified MBE and WBE firm(s) to meet the participation goals. **I understand that I may not make a substitution until I have obtained the written approval of the MBE/WBE Office**.
Initial _____

If awarded this contract, I understand that authorized representatives of the City of Providence may examine the books, records and files of my firm from time to time, to the extent that such material is relevant to a determination of whether my firm is complying with the City's MBE/WBE participation requirements.
Initial _____

I do solemnly declare and affirm under the penalty of perjury that the contents of the foregoing Affidavit are true and correct to the best of my knowledge, information and belief.

_____	_____
Signature of Bidder	Printed Name
_____	_____
Company Name	Date

SUBCONTRACTOR DISCLOSURE FORM

Fill out this form only if you WILL SUBCONTRACT with other parties. If you will not subcontract any portion of the proposed bid, do not fill out this form.

Prime Bidder: _____ Primary NAICS Code: _____

Item Description (as seen on RFP):

_____

_____

_____

Please list all Subcontractors below. Include the total dollar value that you propose to share with each subcontractor and the dollar amount to be subcontracted. Please check off MBE and WBE where applicable. The directory of all state-certified MBE/WBE firms is located at www.mbe.ri.gov. Business NAICS codes can be found at https://www.naics.com/search/

Proposed Subcontractor	MBE	WBE	Primary NAICS Code	Date of Mobilization	$ Value of Subcontract
	☐	☐			$
	☐	☐			$
	☐	☐			$
	☐	☐			$
	☐	☐			$
	☐	☐			$
A. MBE SUBCONTRACTED AMOUNT:					$
B. WBE SUBCONTRACTED AMOUNT:					$
C. NON MBE WBE SUBCONTRACTED AMOUNT:					$
D. DOLLAR AMOUNT OF WORK DONE BY THE PRIME CONTRACTOR:					$
E. TOTAL AMOUNT OF BID (SUM OF A, B, C & D):					$
F. PERCENTAGE OF BID SUBCONTRACTED TO MBEs AND WBEs. (Add A and B. Divide by E and multiply by 100).					%

Please read and initial the following statement acknowledging you understand.

If the percentage of the total amount of the bid being awarded to MBE or WBE vendors is less than 20% (Box F) and the prime contractor is NOT a Rhode Island State-certified MBE or WBE, **you must fill out the MBE/WBE WAIVER REQUEST FORM for consideration by City of Providence MBE/WBE Outreach Director**. Initial _____

_____ _____ _____

Signature of Prime Contractor Printed Name Date Signed

MBE/WBE WAIVER REQUEST FORM

Fill out this form only if you are using subcontractors and did not meet the 20% MBE/WBE participation goal. MBE or WBE Prime Bidders that are certified by the State of Rhode Island are NOT REQUIRED to fill out this form.

Submit this form to the City of Providence MBE/WBE Outreach Director, Grace Diaz, at mbe-wbe@providenceri.gov for review **prior to bid submission**.

This waiver applies only to the current bid which you are submitting to the City of Providence and does not apply to other bids your company may submit for in the future.

Prime Bidder: _____
Company Trade: _____
Item Description (as seen on RFP):
_____
_____
_____

To receive a waiver, you must list the certified MBE and/or WBE companies you contacted, the name of the primary individual with whom you interacted, and the reason the MBE/WBE company could not participate on this project.

MBE/WBE Company Name	Individual's Name	Company Trade	Why did you choose not to work with this company?

I acknowledge the City of Providence's goal of a combined MBE/WBE participation is 20% of the total bid value. I am requesting a waiver of _____ % MBE/WBE (20% minus the value of **Box F** on the Subcontractor Disclosure Form). If an opportunity is identified to subcontract any task associated with the fulfillment of this contract, a good faith effort will be made to select MBE/WBE certified businesses as partners.

_____	_____	_____
Signature of Prime Contractor	Printed Name	Date Signed
_____	_____	_____
Signature of City of Providence MBE/WBE Outreach Director	Printed Name of City of Providence MBE/WBE Outreach Director	Date Signed

BOARD OF CONTRACT AND SUPPLY
CITY OF PROVIDENCE, RHODE ISLAND

BID PACKAGE SPECIFICATIONS

REFERENCE THE FOLLOWING SECTIONS OF THE BID DOCUMENT:

GENERAL REQUIREMENTS

- **01000 – GENERAL REQUIREMENTS**
- **01150 – MEASUREMENT AND PAYMENT**

TECHNICAL SPECIFICATIONS

- **02000 – EARTHWORK**
- **05000 – UTILITY PIPING**
- **05200 – CLEANING AND LINING WATER MAINS**
- **05600 – FLOW STOPPING DECIVES**
- **05800 – TEMPORARY BYPASS PIPING AND SERVICES**
- **08000 – PAVING, SURFACING, & PERMANENT REPAIRS TO STREETS AND SIDEWALKS**
- **08100 – INFRARED BITUMINOUS PAVEMENT RESTORATION**
- **08200 – COLD PLANE / MICRO-MILL BITUMINOUS PAVEMENT RESTORATION**

APPENDICES

- **APPENDIX A – CONTRACT DRAWINGS**
- **APPENDIX B – TYPICAL CONSTRUCTION DETAILS**
- **APPENDIX C – RI DWSRF PROGRAM CONTRACT SPECIFICATIONS PACKAGE**
- **APPENDIX D – EPA DAVIS-BACON PREVAILING WAGE REQUIREMENTS**
- **APPENDIX E – EPA AMERICAN IRON AND STEEL REQUIREMENTS**
- **APPENDIX F – EPA REGULATIONS – DEBARMENT AND SUSPENSIONS**
- **APPENDIX G – NATIONAL GRID, "CAST IRON GAS MAIN ENCROACHMENT"**
- **APPENDIX H – CONTRACT AREA DISTRIBUTION MAP**
- **APPENDIX I – RIDOT - MINIMUM STANDARDS FOR STATE AND MUNICIPAL ROAD REPAIR FOR UTILITY WORK**

BOARD OF CONTRACT AND SUPPLY
CITY OF PROVIDENCE, RHODE ISLAND

SUPPLEMENTAL INFORMATION

If the issuing department for this RFP determines that your firm's bid is best suited to accommodate their need, you will be asked to provide proof of the following prior to formalizing an award.

An inability to provide the outlined items at the request of the department may lead to the disqualification of your bid.

This information is NOT requested to be provided in your initial bid that you will submit to the City Clerk's office by the "date to be opened" noted on page 1. This list only serves as a list of items that your firm should be ready to provide on request.

All bids submitted to the City Clerk become public record. Failure to follow instructions could result in information considered private being posted to the city's Open Meetings Portal and made available as a public record.

You must be able to provide:

- Business Tax ID will be requested after an award is approved by the Board of Contract and Supply.
- **BIDDERS SHALL PROVIDE ALL REQUIRED DOCUMENTATON AND SUPPLEMENTAL INFORMATION AS DINEATED IN THE FOLLOWING SECTIONS OF THE BID DOCUMENT:**

  BIDDING & CONTRACT REQUIREMENTS
  - **00100 – INVITATION TO BID**
  - **00200 – INSTRUCTIONS TO BIDDERS**
  - **00300 – INFORMATION AVAILABLE TO BIDDERS**
  - **00410 – BID FORM (CLEANING & LINING)**
  - **00430 – PROPOSED SUBCONTRACTOR AND SUPPLIER LISTING**
  - **00450 – CONTRACTOR QUALIFICATION STATEMENT**
  - **00470 – CITY OF PROVIDENCE MBE/WBE PARTICIPATION REQUIREMENTS**
  - **00480 – EPA DISADVANTAGED ENTERPRISE (DBE) PROGRAM**
  - **00490 – APPRENTICE UTILIZ., LOCAL HIRING REQS, & AIR QUAL. PROTOCOLS**
  - **00520 – AGREEMENT FORM**
  - **00700 – STD. GENERAL CONDITIONS OF THE CONSTRUCTION CONTRACT**
  - **00800 – SUPPLEMENTARY CONDITIONS**

Specifications
for
Replacement / Rehabilitation
of
Water Mains and Appurtenances
within Providence Water's
Distribution System

THE HON. JORGE O. ELORZA
Mayor

XAYKHAM KHAMSYVORAVONG
Chairperson

MICHAEL J. CORREIA
Council President Pro Tempore

SARA SILVERIA
Ex-Officio

DR. ALMA M. GUERRERO
BREADY Member

WILLIAM E. O'GARA, ESQ.
Legal Advisor

RICKY CARUOLO
General Manager

JOSEPH D. CATALDI
Vice Chairperson

JO-ANN RYAN
City Councilperson

CRISTEN L. RAUCCI, ESQ.
Member

CARISSA R. RICHARD
Secretary

CONTRACT 4-21

PROVIDENCE WATER

SPECIFICATIONS
FOR
REPLACEMENT/REHABILITATION
of
WATER MAINS and
APPURTENANCES

CONTRACT 4-21

TABLE OF CONTENTS

BIDDING and CONTRACT REQUIREMENTS

Section No.	Section Title
00000	Board of Contract and Supply Terms and Requirements for Bidding (Instructions for Submission)
00100	Invitation to Bid
00200	Instructions to Bidders
00300	Information Available to Bidders
00410	Bid Form (Cleaning & Lining)
00430	Proposed Subcontractor and Supplier Listing
00450	Contractor Qualification Statement
00470	City of Providence MBE/WBE Participation Requirements
00480	EPA Disadvantaged Enterprise (DBE) Program
00490	Apprentice Utilization, Local Hiring Requirements, & Air Quality Protocols
00520	Agreement Form
00700	Standard General Conditions of the Construction Contract
00800	Supplementary Conditions

TABLE OF CONTENTS
(Continued)

GENERAL REQUIREMENTS

Section No.	Section Title
01000	General Requirements
01150	Measurement and Payment

TECHNICAL SPECIFICATIONS

Section No.	Section Title
02000	Earthwork
05000	Utility Piping
05200	Cleaning and Lining Water Mains
05600	Flow Stopping Devices
05800	Temporary Bypass Piping and Services
08000	Paving, Surfacing, & Permanent Repairs to Streets & Sidewalks
08100	Infrared Bituminous Pavement Restoration
08200	Cold Plane / Micro-Mill Bituminous Pavement Restoration

APPENDICES

Appendix A – Contract Drawings

Appendix B – Typical Construction Details

Appendix C – RI DWSRF Program Contract Specifications Package

Appendix D – EPA, Davis-Bacon Prevailing Wage Requirements

Appendix E – EPA, American Iron and Steel (AIS) Requirements

Appendix F – EPA Regulations - Debarment and Suspension

Appendix G – National Grid, “Cast Iron Gas Main Encroachment"

Appendix H – Contract Area Distribution Map

Appendix I – RIDOT - Minimum Standards for State and Municipal Road Repair for Utility Work

BOARD OF CONTRACT AND SUPPLY
CITY OF PROVIDENCE, RHODE ISLAND

REQUEST FOR PROPOSALS

Item Description: **REPLACEMENT/REHABILITATION OF WATER MAINS AND APPURTENANCES WITHIN PROVIDENCE WATER'S DISTRIBUTION SYSTEM - UPPER SOUTH PROVIDENCE (PLAIN ST.) CONTRACT 4-21**

Date to be opened: **2:15 P.M. ON TUESDAY, OCTOBER 13, 2020**

Issuing Department: PROVIDENCE WATER SUPPLY BOARD

QUESTIONS

- Please direct questions relative to the bidding process, how to fill out forms, and how to submit a bid (Pages 1-8) to Purchasing Agent Patti Jordan.
  - Phone: (401) 680-5264
  - Email: pjordan@providenceri.gov
    - Please use the subject line "**RFP Question**"
- Please direct questions relative to the Minority and Women's Business Enterprise Program and the corresponding forms (Pages 9-13) to the MBE/WBE Outreach Director for the City of Providence, Grace Diaz
  - Phone: (401) 680-5766
  - Email: gdiaz@providenceri.gov
    - Please use subject line "**MBE WBE Forms**"
- Please direct questions relative to the specifications outlined (beginning on page 14) to the issuing department's subject matter expert:
  - **NORMAN RIPSTEIN, PRINCIPAL ENGINEER**
  - **(401) 521-6300, EXT. 7212**
  - **NORMANR@PROVWATER.COM**

PRE-BID CONFERENCE

A virtual Pre-Bid Conference will be held at 9:30 a.m. on September 30, 2020, via the GoToMeeting online meeting platform. Bidders are not required to attend and participate in the Pre-Bid Conference, however attendance is strongly recommended.

GoToMeeting Access Instructions:

Please join from your computer, tablet or smartphone. https://global.gotomeeting.com/join/230336525
You can also dial in using your phone. United States: +1 (872) 240-3311 Access Code: 230-336-525
New to GoToMeeting? Get the app: https://global.gotomeeting.com/install/230336525

IMPORTANT NOTE TO BIDDERS

DUE TO FILE SIZE, THE COMPLETE BID PACKAGE IS NOT AVAILABLE FOR DOWNLOAD. TO OBTAIN A COMPLETE BID PACKAGE CONTACT:
PATRICIA JORDAN
PURCHASING DEPT. ROOM 408, PROVIDENCE CITY HALL
PHONE: 401-680-5264; EMAIL: PJORDAN@PROVIDENCERI.GOV

BOARD OF CONTRACT AND SUPPLY
CITY OF PROVIDENCE, RHODE ISLAND

INSTRUCTIONS FOR SUBMISSION

Bids may be submitted up to **2:15 P.M.** on the above meeting date at the **Department of the City Clerk. Room 311, City Hall. 25 Dorrance Street, Providence.** At 2:15 P.M. all bids will be publicly opened and read at the Board of Contract Meeting in the City Council Chambers, on the 3rd floor of City Hall.

- Bidders must submit **2 copies** of their bid in sealed envelopes or packages labeled with the captioned **Item Description** and the **City Department to which the RFP and bid are related**. (On page 1)
- Communications to the Board of Contract and Supply that are not competitive sealed bids (i.e. product information/samples) should have "**NOT A BID**" written on the envelope or wrapper.
- Only use form versions and templates included in this RFP. If you have an old version of a form do not recycle it for use in this bid.
- The bid envelope and information relative to the bid must be addressed to:

Board of Contract and Supply
Department of the City Clerk – City Hall, Room 311
25 Dorrance Street
Providence, RI 02903

****PLEASE NOTE: This bid may include details regarding information that you will need to provide (such as proof of licenses) to the issuing department before the formalization of an award.**

This information is NOT requested to be provided in your initial bid by design.

All bids submitted to the City Clerk become public record. Failure to follow instructions could result in information considered private being posted to the city's Open Meetings Portal and made available as a public record. The City has made a conscious effort to avoid the posting of sensitive information on the City's Open Meetings Portal, by requesting that such sensitive information be submitted to the issuing department only at their request.

BOARD OF CONTRACT AND SUPPLY
CITY OF PROVIDENCE, RHODE ISLAND

BID PACKAGE CHECKLIST

Digital forms are available in the City of Providence Purchasing Department Office or online at **http://www.providenceri.gov/purchasing/how-to-submit-a-bid/**

The bid package **MUST** include the following, in this order:

- Bid Form 1: Bidder's Blank as the cover page/ 1st page (*see page **6** of this document*)
- Bid Form 2: Certification of Bidder as 2nd page (*see page **7** of this document*)
- Bid Form 3: Bidder Certification - 50% Performance of Work as 3rd page (*see page **7-1** of this document*)
- Certificate Regarding Public Records (*see page **8** of this document)*
- Forms from the Minority and Women Business Enterprise Program: Based on Bidder Category. *See forms and instructions enclosed (pages **9-13**) or on: https://www.providenceri.gov/purchasing/minority-women-owned-business-mbewbe-procurement-program/*

***Please note: MBE/WBE forms must be completed for EVERY bid submitted and must be inclusive of ALL required signatures. Forms without all required signatures will be considered incomplete.**

- Bidder's Proposal/Packet: Formal response to the specifications outlined in this RFP, including pricing information and details related to the good(s) or service(s) being provided. Please be mindful of formatting responses as requested to ensure clarity.
- Financial Assurance, *if requested* (as *indicated on page 5 of this document under "Bid Terms")*

All of the above listed documents are REQUIRED. (With the exception of financial assurances, which are only required if specified on page 5.)

******Failure to meet specified deadlines, follow specific submission instructions, or enclose all required documents with all applicable signatures will result in disqualification, or in an inability to appropriately evaluate bids.***

BOARD OF CONTRACT AND SUPPLY
CITY OF PROVIDENCE, RHODE ISLAND

NOTICE TO VENDORS

1. The Board of Contract and Supply will make the award to the lowest qualified and responsible bidder.
2. In determining the lowest responsible bidder, cash discounts based on preferable payment terms will not be considered.
3. Where prices are the same, the Board of Contract and Supply reserves the right to award to one bidder, or to split the award.
4. No proposal will be accepted if the bid is made in collusion with any other bidder.
5. Bids may be submitted on an "equal in quality" basis. The City reserves the right to decide equality. Bidders must indicate brand or the make being offered and submit detailed specifications if other than brand requested.
6. A bidder who is an out-of-state corporation shall qualify or register to transact business in this State, in accordance with the Rhode Island Business Corporation Act, RIGL Sec. 7-1.2-1401, et seq.
7. The Board of Contract and Supply reserves the right to reject any and all bids.
8. Competing bids may be viewed in person at the Department of the City Clerk, City Hall, Providence, immediately upon the conclusion of the formal Board of Contract and Supply meeting during which the bids were unsealed/opened. Bids may also be accessed electronically on the internet via the City's Open Meetings Portal.
9. As the City of Providence is exempt from the payment of Federal Excise Taxes and Rhode Island Sales Tax, prices quoted are not to include these taxes.
10. In case of error in the extension of prices quoted, the unit price will govern.
11. The contractor will **NOT** be permitted to: a) assign or underlet the contract, or b) assign either legally or equitably any monies or any claim thereto without the previous written consent of the City Purchasing Director.
12. Delivery dates must be shown in the bid. If no delivery date is specified, it will be assumed that an immediate delivery from stock will be made.
13. A certificate of insurance will normally be required of a successful vendor.
14. For many contracts involving construction, alteration and/or repair work, State law provisions concerning payment of prevailing wage rates apply (RIGL Sec. 37-13-1 et seq.)
15. No goods should be delivered or work started without a Purchase Order.
16. **Submit 2 copies of the bid to the City Clerk, unless the specification section of this document indicates otherwise.**
17. Bidder must certify that it does not unlawfully discriminate on the basis of race, color, national origin, gender, gender identity or expression, sexual orientation and/or religion in its business and hiring practices and that all of its employees are lawfully employed under all applicable federal, state and local laws, rules and regulations. (See Bid Form 2.)
18. This project is also subject to the application of American Iron and Steel requirements to the FY 2021 and FY 2022 Drinking Water State Revolving Fund Assistance Agreements, as administered by the Environmental Protection Agency (EPA). Reference is made to Appendix E of the Contract Specifications for the USEPA Memorandum, dated April 7, 2017.

BOARD OF CONTRACT AND SUPPLY
CITY OF PROVIDENCE, RHODE ISLAND

BID TERMS

1. Financial assurances may be required in order to be a successful bidder for Commodity or Construction and Service contracts. If either of the first two checkboxes below is checked, the specified assurance **must accompany** a bid, or the bid will not be considered by the Board of Contract and Supply. The third checkbox indicates the lowest responsible bidder will be contacted and required to post a bond to be awarded the contract.

   a) ☒ A certified check for **$25,000.00** must be deposited with the City Clerk as a guarantee that the Contract will be signed and delivered by the bidder.

   OR

   b) ☒ A bid bond in the amount of **$50,000.00** must be deposited with the City Clerk as a guarantee that the contract will be signed and delivered by the bidder; and the amount of such bid bond shall be retained for the use of the City as liquidated damages in case of default.

   c) ☒ A performance and payment bond with a satisfactory surety company will be posted by the bidder in a sum equal to one hundred per centum (100%) of the awarded contract.

   d) ☐ No financial assurance is necessary for this item.

2. Recommendation for Award will be made within **sixty (60) days of bid opening**. All bid prices will be considered firm, unless qualified otherwise. Requests for price increases will not be honored.
3. Failure to deliver within the time quoted or failure to meet specifications may result in default in accordance with the general specifications. It is agreed that deliveries and/or completion are subject to strikes, lockouts, accidents and Acts of God.

The following entry applies only for COMMODITY BID TERMS:

4. Payment for partial delivery will not be allowed except when provided for in blanket or term contracts.

The following entries apply only for CONSTRUCTION AND SERVICE BID TERMS:

5. Only one shipping charge will be applied in the event of partial deliveries for blanket or term contracts.
6. Prior to commencing performance under the contract, the successful bidder shall attest to compliance with the provisions of the Rhode Island Worker's Compensation Act, RIGL 28-29-1, et seq. If exempt from compliance, the successful bidder shall submit a sworn Affidavit by a corporate officer to that effect, which shall accompany the signed contract.
7. Prior to commencing performance under the contract, the successful bidder shall, submit a certificate of insurance, in a form and in an amount satisfactory to the City.

BOARD OF CONTRACT AND SUPPLY
CITY OF PROVIDENCE, RHODE ISLAND

BID FORM 1: Bidders Blank

1. Bids must meet the attached specifications. Any exceptions or modifications must be noted and fully explained.
2. Bidder's responses must be in ink or typewritten, and all blanks on the bid form should be completed.
3. The price or prices proposed should be stated both in **WRITING** and in **FIGURES**, and any proposal not so stated may be rejected. **Contracts exceeding twelve months must specify annual costs for each year.**
4. Bids **SHOULD BE TOTALED** so that the final cost is clearly stated (unless submitting a unit price bid), however **each item should be priced individually**. Do not group items. Awards may be made on the basis of ***total*** bid or by ***individual items***.
5. All bids **MUST BE SIGNED IN INK**.

Name of Bidder (Firm or Individual): _____

Contact Name: _____

Business Address: _____

Business Phone #: _____

Agrees to bid on (Items(s) to be bid): _____

CONTRACT 4-21, UPPER SOUTH PROVIDENCE (PLAIN ST.), PROVIDENCE
SECTION 00410 - BID FORM CLEANING & LINING

Part 1 – Unit Rates for Water Main Replacement and Rehab. Work and Earth Work & Restoration within Private & Public Space
Part 2 – Unit Rates for Service Abandonments
Part 3 – Unit Rates for Replacement of Lead Services - Private Property ONLY
Part 4 – Miscellaneous Unit Prices for Additional Work not specified in Parts 1, 2, or 3
Part 5 – Labor and Equipment Rates for Additional Work not specified in Parts 1, 2, or 3

If the bidder's company is based in a state other than Rhode Island, list name and contact information for a local agent for service of process that ***is located <u>within</u> Rhode Island***: _____

Please visit http://www.naics.com/search/ and identify the NAICS Code(s) for items being bid on. Enter the NAICS code(s) here or in parentheses next to each item listed immediately above: <u>237110 "Water and Sewer Line and Related Structures Construction"</u>

Delivery Date (when applicable): _____

Name of Surety Company (if applicable): _____

Total Amount in Writing*: _____

Total Amount in Figures*: _____

****If you are submitting a unit price bid please insert "Unit Price Bid."***

Use additional pages if necessary for additional bidding details.

( ) Acknowledge receipt of all Addenda to the Specifications
( ) Conforms to Specifications
( ) Modifications to Specifications. If yes, Please note
( ) Required MBE/WBE Forms submitted with Bid
( ) Bidder Certification, 50% Performance of Work

_____
Signature of Representative

_____
Title

BOARD OF CONTRACT AND SUPPLY
CITY OF PROVIDENCE, RHODE ISLAND

BID FORM 2: Certification of Bidder
(Non-Discrimination/Hiring)

Upon behalf of_____(Firm or Individual Bidding),

I,_____(Name of Person Making Certification),

being its_____(Title or "Self"), hereby certify that:

1. Bidder does not unlawfully discriminate on the basis of race, color, national origin, gender, sexual orientation and/or religion in its business and hiring practices.
2. All of Bidder's employees have been hired in compliance with all applicable federal, state and local laws, rules and regulations.

I affirm by signing below that I am duly authorized on behalf of Bidder, on

this_____day of_____20____.

_____
Signature of Representative

_____
Printed Name

BID FORM 3: Bidder Certification
(50% Performance of Work)

Upon behalf of_____(Bidder's Name),

I,_____(Name of Person Making Certification),

being its_____(Title or "Self"), hereby certify that:

1. Bidder shall perform at least fifty (50) percent of this Work with their own forces. Fifty percent of the work must include the cleaning and lining of water mains (if bid for cleaning and lining) or cast iron replacement (if bid for replacement) and shall be completed by the Bidder (General Contractor) alone.

I affirm by signing below that I am duly authorized on behalf of Bidder,

on this_____day of_____20____.

_____
Signature of Representative

_____
Printed Name

BOARD OF CONTRACT AND SUPPLY

CITY OF PROVIDENCE, RHODE ISLAND

Certificate Regarding Public Records

Upon behalf of_____(Firm or Individual Bidding),

I,_____(Name of Person Making Certification),

being its_____(Title or "Self"), hereby certify an

understanding that:

1. All bids submitted in response to Requests for Proposals (RFP's) and Requests for Qualification (RFQ's), documents contained within, and the details outlined on those documents become public record upon receipt by the City Clerk's office and opening at the corresponding Board of Contract and Supply (BOCS) meeting.
2. The Purchasing Department and the issuing department for this RFP/RFQ have made a conscious effort to request that sensitive/personal information be submitted directly to the issuing department and only at request if verification of specific details is critical the evaluation of a vendor's bid.
3. The requested supplemental information may be crucial to evaluating bids. Failure to provide such details may result in disqualification, or an inability to appropriately evaluate bids.
4. If sensitive information that has not been requested is enclosed or if a bidder opts to enclose the defined supplemental information prior to the issuing department's request in the bidding packet submitted to the City Clerk, the City of Providence has no obligation to redact those details and bears no liability associated with the information becoming public record.
5. The City of Providence observes a public and transparent bidding process. Information required in the bidding packet may not be submitted directly to the issuing department at the discretion of the bidder in order to protect other information, such as pricing terms, from becoming public. Bidders who make such an attempt will be disqualified.

I affirm by signing below that I am duly authorized on behalf of Bidder, on

this_____day of_____20____.

_____

Signature of Representative

_____

Printed Name

CITY OF PROVIDENCE
MINORITY AND WOMEN BUSINESS ENTERPRISE PROGRAM
BIDDER INFORMATION AND FORMS

The City of Providence actively seeks Minority and Women business enterprises to participate in bids to meet the City's procurement needs. Pursuant to the City of Providence Code of Ordinances, Chapter 21, Article II, Sec. 21-52 (Minority and Women's Business Enterprise) and Rhode Island General Laws (as amended), Chapter 31-14, et seq. (Minority Business Enterprise), Minority Business Enterprise (MBE) and Women's Business Enterprise (WBE) participation goals apply to contracts.

The goal for Minority Business Enterprise (MBE) participation is **10%** of the total bid value.
The goal for Women's Business Enterprise (WBE) participation is **10%** of the total bid value.
The goal for combined MBE/WBE participation is **20%** of the total bid value.

Only businesses certified with the State of Rhode Island as minority and/or women business enterprises are counted towards the City's goals. Eligible minority or women-owned businesses are encouraged to seek certification from the State of Rhode Island Minority Business Enterprise Compliance Office at: http://odeo.ri.gov/offices/mbeco/

Note: MBE certification with the State of Rhode Island on the basis of Portuguese heritage is not currently recognized by the City of Providence's MBE program.

Bid Requirements:

All Bidders: All bidders must complete and submit the ***MBE/WBE Participation Affidavit*** indicating whether or not they are a state-certified MBE/WBE and acknowledging the City's participation goals. Submission of this form is required with **every bid**. Your bid will not be accepted without an affidavit.

Bidders who will be subcontracting: Bidders who will be subcontracting must submit the ***Subcontractor Disclosure Form*** as part of their bid submission. All subcontractors, regardless of MBE/WBE status, must be listed on this form. Business NAICS codes can be found at https://www.naics.com/search/. Awarded bidders are required to submit ***Subcontractor Utilization and Payment Reports*** with each invoice.

Waiver Requests:

If the percentage of the total amount of the bid being awarded to MBE or WBE vendors is less than 20% (Box F on the Subcontractor Disclosure Form) and the prime contractor is not a Rhode Island State-certified MBE or WBE, the Bidder must complete the *MBE/WBE Waiver Request Form* for review. Waivers will be considered on a case by case basis.

No waiver will be granted unless the waiver request includes documentation that demonstrates that the Bidder has made good faith efforts to achieve the City's stated participation goals. Waivers must be reviewed and signed by the City of Providence's MBE/WBE Outreach Director, Grace Diaz, or her designee. Department Directors cannot recommend a bidder for award if this form is applicable and absent. If the bid does not meet the participation goals of the City of Providence and a waiver is not filed with the signature of the MBE/WBE Outreach Director or her designee, the bid will not be accepted.

Verifying MBE/WBE Certification

It is the responsibility of the bidder to confirm that every MBE/WBE named in a proposal and included in a contract is certified by the Rhode Island Minority Business Enterprise Compliance office. The current MBE/WBE directory is available at the State of RI MBE Office, One Capitol Hill, 2nd Floor, Providence, RI, or online at http://odeo.ri.gov/offices/mbeco/mbe-wbe.php. You can also call (401) 574-8670 to verify certification, expiration dates, and services that the MBE/WBE is certified to provide. Note: MBE certification with the State of Rhode Island on the basis of Portuguese heritage is not currently recognized by the City of Providence's MBE program.

Form Instructions:

Access all bid forms from http://www.providenceri.gov/oeo/ or http://www.providenceri.gov/purchasing/minority-women-owned-business-mbewbe-procurement-program/. **Download** the forms as blank PDFs. Once saved on your computer, fill them out using the Adobe program. The fillable PDFs must be completed in Adobe in order to be saved property. Google Chrome and similar platforms do not allow for the forms to be saved as filled PDFs. Therefore, please download the blank forms to your computer, then fill them out and save.

Assistance with Form Requirements

Examples of completed forms can be found on the City of Providence website at http://www.providenceri.gov/oeo/ or http://www.providenceri.gov/purchasing/minority-women-owned-business-mbewbe-procurement-program/.

Contract Requirements:

Prime contractors engaging subcontractors must submit the ***Subcontractor Utilization and Payment Report*** to the City Department's Fiscal Agent with every invoice and with request for final payment. This form is not submitted as a part of the initial bid package.

For contracts with duration of less than 3 months, this form must be submitted along with the contractor's request for final payment. The form must include all subcontractors utilized on the contract, both MBE/WBE and non- MBE/WBE, the total amount paid to each subcontractor for the given period and to date. During the term of the contract, any unjustified failure to comply with the MBE/WBE participation requirements is a material breach of contract.

Questions?

For more information or for assistance with MBE/WBE Forms, contact the City of Providence MBE/WBE Outreach Director, Grace Diaz, at mbe-wbe@providenceri.com or (401) 680-5766.

MBE/WBE PARTICIPATION AFFIDAVIT

Item Description (as seen on RFP):

_____

_____

_____

Prime Bidder: _____

Prime Bidder (Company) Phone Number:_____

Prime Bidder (Company) Zip Code: _____

Which one of the following describes your business' status in terms of Minority and/or Woman-Owned Business Enterprise certification with the State of Rhode Island? _____MBE _____WBE _____Neither MBE nor WBE

By initialing the following sections and signing the bottom of this document in my capacity as the contractor or an authorized representative of contractor, I make this Affidavit:

It is the policy of the City of Providence that minority business enterprises (MBEs) and women business enterprises (WBEs) should have the maximum opportunity to participate in procurements and projects as prime contractors and vendors. Pursuant to Sec. 21-52 of the Providence Code of Ordinances and Chapter 31-14 *et seq.* of the Rhode Island General Laws (as amended), MBE and WBE participation goals apply to contracts.

The goal for Minority Business Enterprise (MBE) participation is 10% of the total bid value.
The goal for Women's Business Enterprise (WBE) participation is 10% of the total bid value.
The goal for combined MBE/WBE participation is 20% of the total bid value.

I acknowledge the City of Providence's goals of supporting MBE/WBE certified businesses. Initial _____

If awarded the contract, I understand that my company must submit to the Minority and Women's Business Coordinator at the City of Providence (MBE/WBE Office), copies of all executed agreements with the subcontractor(s) being utilized to achieve the participation goals and other requirements of the RI General Laws. **I understand that these documents must be submitted prior to the issuance of a notice to proceed**. Initial _____

I understand that, if awarded the contract, my firm must submit to the MBE/WBE Office canceled checks and reports required by the MBE/WBE Office on a quarterly basis verifying payments to the subcontractors(s) utilized on the contract. Initial _____

If I am awarded this contract and find that I am unable to utilize the subcontractor(s) identified in my Statement of Intent, I understand that I must substitute another certified MBE and WBE firm(s) to meet the participation goals. **I understand that I may not make a substitution until I have obtained the written approval of the MBE/WBE Office**.
Initial _____

If awarded this contract, I understand that authorized representatives of the City of Providence may examine the books, records and files of my firm from time to time, to the extent that such material is relevant to a determination of whether my firm is complying with the City's MBE/WBE participation requirements.
Initial _____

I do solemnly declare and affirm under the penalty of perjury that the contents of the foregoing Affidavit are true and correct to the best of my knowledge, information and belief.

_____	_____
Signature of Bidder	Printed Name
_____	_____
Company Name	Date

SUBCONTRACTOR DISCLOSURE FORM

Fill out this form only if you WILL SUBCONTRACT with other parties. If you will not subcontract any portion of the proposed bid, do not fill out this form.

Prime Bidder: _____ Primary NAICS Code: _____

Item Description (as seen on RFP):

_____

_____

_____

Please list all Subcontractors below. Include the total dollar value that you propose to share with each subcontractor and the dollar amount to be subcontracted. Please check off MBE and WBE where applicable. The directory of all state-certified MBE/WBE firms is located at www.mbe.ri.gov. Business NAICS codes can be found at https://www.naics.com/search/

Proposed Subcontractor	MBE	WBE	Primary NAICS Code	Date of Mobilization	$ Value of Subcontract
	☐	☐			$
	☐	☐			$
	☐	☐			$
	☐	☐			$
	☐	☐			$
	☐	☐			$
A. MBE SUBCONTRACTED AMOUNT:					$
B. WBE SUBCONTRACTED AMOUNT:					$
C. NON MBE WBE SUBCONTRACTED AMOUNT:					$
D. DOLLAR AMOUNT OF WORK DONE BY THE PRIME CONTRACTOR:					$
E. TOTAL AMOUNT OF BID (SUM OF A, B, C & D):					$
F. PERCENTAGE OF BID SUBCONTRACTED TO MBEs AND WBEs. (Add A and B. Divide by E and multiply by 100).					%

Please read and initial the following statement acknowledging you understand.

If the percentage of the total amount of the bid being awarded to MBE or WBE vendors is less than 20% (Box F) and the prime contractor is NOT a Rhode Island State-certified MBE or WBE, **you must fill out the MBE/WBE WAIVER REQUEST FORM for consideration by City of Providence MBE/WBE Outreach Director**. Initial _____

_____ _____ _____

Signature of Prime Contractor Printed Name Date Signed

MBE/WBE WAIVER REQUEST FORM

Fill out this form only if you are using subcontractors and did not meet the 20% MBE/WBE participation goal. MBE or WBE Prime Bidders that are certified by the State of Rhode Island are NOT REQUIRED to fill out this form.

Submit this form to the City of Providence MBE/WBE Outreach Director, Grace Diaz, at mbe-wbe@providenceri.gov for review **prior to bid submission**.

This waiver applies only to the current bid which you are submitting to the City of Providence and does not apply to other bids your company may submit for in the future.

Prime Bidder: _____
Company Trade: _____
Item Description (as seen on RFP):
_____
_____
_____

To receive a waiver, you must list the certified MBE and/or WBE companies you contacted, the name of the primary individual with whom you interacted, and the reason the MBE/WBE company could not participate on this project.

MBE/WBE Company Name	Individual's Name	Company Trade	Why did you choose not to work with this company?

I acknowledge the City of Providence's goal of a combined MBE/WBE participation is 20% of the total bid value. I am requesting a waiver of _____ % MBE/WBE (20% minus the value of **Box F** on the Subcontractor Disclosure Form). If an opportunity is identified to subcontract any task associated with the fulfillment of this contract, a good faith effort will be made to select MBE/WBE certified businesses as partners.

_____	_____	_____
Signature of Prime Contractor	Printed Name	Date Signed
_____	_____	_____
Signature of City of Providence MBE/WBE Outreach Director	Printed Name of City of Providence MBE/WBE Outreach Director	Date Signed

BOARD OF CONTRACT AND SUPPLY
CITY OF PROVIDENCE, RHODE ISLAND

BID PACKAGE SPECIFICATIONS

REFERENCE THE FOLLOWING SECTIONS OF THE BID DOCUMENT:

GENERAL REQUIREMENTS

- **01000 – GENERAL REQUIREMENTS**
- **01150 – MEASUREMENT AND PAYMENT**

TECHNICAL SPECIFICATIONS

- **02000 – EARTHWORK**
- **05000 – UTILITY PIPING**
- **05200 – CLEANING AND LINING WATER MAINS**
- **05600 – FLOW STOPPING DECIVES**
- **05800 – TEMPORARY BYPASS PIPING AND SERVICES**
- **08000 – PAVING, SURFACING, & PERMANENT REPAIRS TO STREETS AND SIDEWALKS**
- **08100 – INFRARED BITUMINOUS PAVEMENT RESTORATION**
- **08200 – COLD PLANE / MICRO-MILL BITUMINOUS PAVEMENT RESTORATION**

APPENDICES

- **APPENDIX A – CONTRACT DRAWINGS**
- **APPENDIX B – TYPICAL CONSTRUCTION DETAILS**
- **APPENDIX C – RI DWSRF PROGRAM CONTRACT SPECIFICATIONS PACKAGE**
- **APPENDIX D – EPA DAVIS-BACON PREVAILING WAGE REQUIREMENTS**
- **APPENDIX E – EPA AMERICAN IRON AND STEEL REQUIREMENTS**
- **APPENDIX F – EPA REGULATIONS – DEBARMENT AND SUSPENSIONS**
- **APPENDIX G – NATIONAL GRID, "CAST IRON GAS MAIN ENCROACHMENT"**
- **APPENDIX H – CONTRACT AREA DISTRIBUTION MAP**
- **APPENDIX I – RIDOT - MINIMUM STANDARDS FOR STATE AND MUNICIPAL ROAD REPAIR FOR UTILITY WORK**

BOARD OF CONTRACT AND SUPPLY
CITY OF PROVIDENCE, RHODE ISLAND

SUPPLEMENTAL INFORMATION

If the issuing department for this RFP determines that your firm's bid is best suited to accommodate their need, you will be asked to provide proof of the following prior to formalizing an award.

An inability to provide the outlined items at the request of the department may lead to the disqualification of your bid.

This information is NOT requested to be provided in your initial bid that you will submit to the City Clerk's office by the "date to be opened" noted on page 1. This list only serves as a list of items that your firm should be ready to provide on request.

All bids submitted to the City Clerk become public record. Failure to follow instructions could result in information considered private being posted to the city's Open Meetings Portal and made available as a public record.

You must be able to provide:

- Business Tax ID will be requested after an award is approved by the Board of Contract and Supply.
- **BIDDERS SHALL PROVIDE ALL REQUIRED DOCUMENTATON AND SUPPLEMENTAL INFORMATION AS DINEATED IN THE FOLLOWING SECTIONS OF THE BID DOCUMENT:**

  BIDDING & CONTRACT REQUIREMENTS
  - **00100 – INVITATION TO BID**
  - **00200 – INSTRUCTIONS TO BIDDERS**
  - **00300 – INFORMATION AVAILABLE TO BIDDERS**
  - **00410 – BID FORM (CLEANING & LINING)**
  - **00430 – PROPOSED SUBCONTRACTOR AND SUPPLIER LISTING**
  - **00450 – CONTRACTOR QUALIFICATION STATEMENT**
  - **00470 – CITY OF PROVIDENCE MBE/WBE PARTICIPATION REQUIREMENTS**
  - **00480 – EPA DISADVANTAGED ENTERPRISE (DBE) PROGRAM**
  - **00490 – APPRENTICE UTILIZ., LOCAL HIRING REQS, & AIR QUAL. PROTOCOLS**
  - **00520 – AGREEMENT FORM**
  - **00700 – STD. GENERAL CONDITIONS OF THE CONSTRUCTION CONTRACT**
  - **00800 – SUPPLEMENTARY CONDITIONS**

SECTION 00100

INVITATION TO BID

SECTION 00100
INVITATION TO BID

The City of Providence and its Board of Contract and Supply, is accepting sealed bids, on behalf of Providence Water, for:

REPLACEMENT/REHABILITATION OF WATER MAINS AND APPURTENANCES WITHIN PROVIDENCE WATER'S DISTRIBUTION SYSTEM
CONTRACT 4-21

In general, the work shall consist of the rehabilitation of approximately 12,000 Linear Feet (L.F.) of existing 6-inch, 8-inch, and 12-inch cast-iron water mains. The work shall also include temporary by-pass installation, the removal and replacement of appurtenances (valves, hydrants and services), including the replacement of existing lead water service lines with new copper water service lines and appurtenances within Public Space, and the associated full depth asphalt restoration of street excavations and permanent restoration of street sections (disturbed during construction operations) via mill and overlay, sidewalks, and grassy areas, within the Providence, Upper South Providence service area of the Providence Water's distribution system. Without any prejudice to any other direction as indicated on the Contract Documents or mentioned in the Specifications, the Contractor shall provide all labor, equipment, materials, and services necessary to complete the work, including excavation and backfill; removing and disposing of existing water mains and appurtenances; installing new water mains; rehabilitating existing water mains by cleaning and cement lining; installing gate valves, blow-offs and hydrant assemblies; removing and replacing existing service connections; performing wet taps; installing new corporation stops, copper service tubing and fittings, new curb stops and curb boxes, existing copper service reconnections, and appurtenances, within the Public Space. The contract work also includes excavation and backfilling; lead service removal; installation of new copper service tubing, polyethylene tubing connections, interior piping and fittings, equipment, and appurtenances, within Private Property (locations to be determined); the permanent restoration of street and sidewalks within the Public Space; and the temporary and permanent restoration of grassy areas within both the Public Space and Private Property.

Contract Drawings have been prepared for the contract area as part of the Bid Documents. Work on Private Property is contingent upon approval by the property owner and signed agreements administered by Providence Water's "Lead Free is the Way to be Program". Providence Water reserves the right to add or deduct the number of locations/addresses by blocks of streets and/or quantities for the above-mentioned work, in its best interest.

IMPORTANT NOTE TO BIDDERS

DUE TO FILE SIZE, THE COMPLETE BID PACKAGE IS **NOT AVAILABLE FOR DOWNLOAD**.
TO OBTAIN A COMPLETE BID PACKAGE CONTACT:

PATRICIA JORDAN
PURCHASING DEPT. ROOM 408,
PROVIDENCE CITY HALL
PHONE: 401-680-5264
EMAIL: PJORDAN@PROVIDENCERI.GOV

SECTION 00100
INVITATION TO BID

At the current time, it is anticipated that a Notice-to-Proceed (NTP) will be issued in the Spring of 2021 with a Project Duration of one construction season ending November 15, 2021. All water main and service related work, including temporary restoration and permanent restoration, is to be completed along select streets within the Upper South Providence service area of Providence, RI, as directed by Providence Water, during the 2021 construction season. All excavations opened within a construction season must have permanent pavement restoration completed before the winter closeout of that construction season, and/or as directed by Providence Water.

The overall goal is to rehabilitate existing water mains within the Upper South Providence service area of Providence, RI, in the 2021 construction year, as approved by Providence Water. Further, when possible, it is Providence Water's desire to coordinate the contract work with any future street paving that may be scheduled by the City and/or State in 2021. Although specific City street paving scheduling information is not presently available, Providence Water has provided the selected street listings for this contract to the Providence Department of Public Works for advance informational and scheduling coordination purposes.

It is Providence Water's intent to award the contract to the responsive and responsible bidder whose base bid is the lowest evaluated or responsive bid price, in accordance with the criteria set forth below, to perform the work described above.

The objective measurable criteria to be utilized in determining the lowest evaluated or responsive bid price are as follows:

(1) The lowest Total Bid Price Amount (resolved in favor of corrected sums) submitted for Part 1 of the Bid Schedule Summary;
(2) The bidder's Qualifications, as set forth in Article 3 of Section 00200, Instructions to Bidders, and as indicated in the bidder's Contractor Qualification Statement;
(3) The adequacy of the bidder's financial resources, including its ability to comply with the requirements of Article 5 of Section 00700, General Terms and Conditions;
(4) The quality of work performed previously by the bidder for the Owner, if any, and the quality of work performed on comparably sized projects for other entities;
(5) The record of the bidder in accomplishing work on other, similar projects in the required time frame;
(6) The bidder's ability to obtain the necessary materials, as set forth in Section 0300 - 2, List of Approved Materials/Manufacturers for use in the Providence Water Distribution System; and
(7) Consistency with historical unit pricing of Unit Rates and Unit Prices for bid items for the related contract work.

The award of the Contract to the lowest evaluated or responsive bidder shall NOT guarantee or entitle the lowest evaluated or responsive bidder to the full Contract Amount. It is therefore understood by all parties that the actual amount of work completed and the final Contract Amount shall be subject to availability of funds.

Projects shall be completed, and ready for final payments, within the time specified in the scope of services proposal and as specified in the Notice to Proceed or as provided in Paragraph 2.03 of the General Conditions, as modified by Paragraph 2.03.A of the Supplementary Conditions.

Failure to complete a project by November 15, 2021 shall result in the assessment of liquidated damages in the amount of **$5,500** per calendar day that the completion is late beyond the time specified.

Bids will be received by the City of Providence Board of Contract and Supply at the Department of the City Clerk, Room 311, City Hall, Providence, Rhode Island up to **2:15 p.m. on Tuesday, October 13, 2020**. At 2:15 p.m., all Bids will be publicly opened and read out loud at the Board of Contract and Supply meeting, City Council Chambers, Third Floor, City Hall.

SECTION 00100
INVITATION TO BID

Bids must be submitted on the Bid Form included with the Bidding Documents.

The Bidding Documents have been prepared on a flash drive, which may be obtained at the City of Providence Purchasing Department, Room 408, City Hall, Providence, Rhode Island. The Bidding Documents include the Contract Drawings and Contract Specifications for the respective contract area.

A virtual Pre-Bid Conference will be held at **9:30 a.m. on September 30, 2020, via the GoToMeeting online meeting platform.** Bidders are **not required** to attend and participate in the Pre-Bid Conference, however **attendance is strongly recommended**.

GoToMeeting Access Instructions:

Please join from your computer, tablet or smartphone.

https://global.gotomeeting.com/join/230336525

You can also dial in using your phone.

United States: +1 (872) 240-3311

Access Code: 230-336-525

New to GoToMeeting? Get the app now and be ready when the meeting starts:
https://global.gotomeeting.com/install/230336525

Questions pertaining to the Bidding Documents may be addressed to either:

Norm Ripstein, Principal Engineer – Project Manager
(401) 521-6300 Ext. 7212, Normanr@provwater.com

Roger Biron, Engineer – Project Manager
(401) 521-6300 Ext. 7285, Rogerb@provwater.com

A Bid must be accompanied by a Bid Security made payable to the City of Providence and Providence Water in the form of a certified check for $25,000.00, as a guarantee that the Contract will be signed and delivered by the bidder; OR a Bid Bond in the amount of $50,000.00 as a guarantee that the contract will be signed and delivered by the bidder; and in default thereof, the bid bond shall be retained for the use of the City of Providence and the Providence Water as liquidated damages on account of such default.

Bidders are required to include with their Bid, information pertaining to proposed subcontractors and suppliers as indicated in the Bid Form or required by the Bidding Documents.

Compliance with State of Rhode Island General Laws, Chapters 37-12 and 37-13, and prevailing Wage Rate provisions is a requirement for Bidders and any subcontractors. **Reference is hereby made to the Appendices of Section 00800 - Supplementary Conditions of the Contract Specifications for "Special Notes" pertaining to Bonds; Labor and Payment; Minority Businesses; and Prevailing Wage Rates. Bidders shall review Article 14, "Basis of Bid; Evaluation of Bids", as provided in Section 00200, "Instructions to Bidders" of the Contract Specifications.**

This project is subject to the requirements of the RI Drinking Water State Revolving Fund (DWSRF) Program as administered by the RI Department of Health (RIDOH) Office of Drinking Water Quality. Reference is made to the RIDOH DWSRF Program Contract Specifications Package bound within Appendix C of the Contract Specifications. Reference is hereby made to the American Iron and Steel (AIS) requirements of this project, as provided in Appendix E of the Contract Specifications.

Bidders must complete and submit with their bids all forms required by Section 00470 of the Specifications, titled Bidder Information - MBE/WBE Participation Requirements. Failure to submit all required forms and documentation will result in the bid being considered non-responsive and rejection of the bid.

Bidders must be familiar with and comply with all permitting and licensing requirements of federal, state, and local laws, ordinances, and regulations applicable to the Work. Compliance with all such requirements, including but not limited to applicable chapters of Titles 5 and 28 of the State of Rhode Island General Laws, is a requirement for Bidders and any subcontractors.

The City of Providence and Providence Water reserve the right to waive any irregularities and to reject any or all bids.

SECTION 00200

INSTRUCTIONS TO BIDDERS

SECTION 00200
INSTRUCTIONS TO BIDDERS

ARTICLE 1 - DEFINED TERMS

1.1 Terms used in these Instructions to Bidders will have the meanings indicated in the General Conditions and Supplementary Conditions. Additional terms used in these Instructions to Bidders have the meanings indicated below which are applicable to both the singular and plural thereof:

A. *Bidder / General Contractor / Contractor* - - The individual or entity who submits a Bid directly to the OWNER.

B. *Issuing Office* - - The office issuing the Bidding Documents; the City of Providence Purchasing Department, Room 305, City Hall, Providence, Rhode Island.

C. *Owner* - - Providence Water, as administrator of the contract in conjunction with the City of Providence and its Board of Contract and Supply.

D. *Owner's Representative* - - The Owner may, at Owner's sole discretion, designate a representative authorized to act on the Owner's behalf with respect to the Contract. This designee may include, but not be limited to, Advisors, Architectural/Engineering (A/E) Consultants, Construction Managers, Engineering Consultants, and/or Resident Inspectors that are contracted with the Owner related to the project and/or to act on Owner's behalf.

E. *Successful Bidder* - - The responsible and responsive Bidder whose Bid is the lowest evaluated or responsive bid price, and represents the best value and is in the best interests of the OWNER, to whom the OWNER (on the basis of the OWNER's evaluation as hereinafter provided) makes an award.

F. The terms *"work," "replacement," "lining," "construction," and "cleaning"* shall each be construed to denote any and all activities under this contract, regardless of its nature.

ARTICLE 2 - COPIES OF BIDDING DOCUMENTS

2.1 Complete sets of the Bidding Documents may be obtained from the City of Providence Purchasing Department.

2.2 Complete sets of Bidding Documents must be used in preparing Bids; neither the OWNER nor ENGINEER assumes any responsibility for errors or misinterpretations resulting from the use of incomplete sets of Bidding Documents.

2.3 OWNER and ENGINEER in making copies of Bidding Documents available on the

above terms do so only for the purpose of obtaining Bids for the Work and do not confer a license or grant for any other use.

ARTICLE 3 - QUALIFICATIONS OF BIDDERS

3.1 To demonstrate Bidder's qualifications to perform the Work, in addition to the information that is required to be submitted with the Bid by the Bidding Documents, within 5 days of any request by OWNER, Bidder shall submit any written evidence of such qualifications requested by the OWNER, such as financial data, previous experience, references for past work, present commitments, licensing, and such other data as may be called for elsewhere in the Contract Documents.

3.2 The Bidder shall completely and truly fill in and respond to all information requested in these contract documents. Failure to provide all information requested may, at the OWNER's discretion, result in the Bid being considered non-responsive and rejected.

3.3 The OWNER requests bids from contractor's that specialize in the rehabilitation method specified in the contract drawings. Reference Appendix A - Contract Drawings, Article 3.4 of Section 00200, Instructions to Bidders (for Cleaning & Cement Mortar Lining Contracts), Article 3.5 of Section 00200, Instructions to Bidders (for Cast Iron Replacement Contracts).

3.4 Bidder Qualifications – Cleaning & Cement Mortar Lining Contracts

A. Bidder shall have a minimum of five (5) consecutive years of experience as a prime Contractor self-performing cleaning and cement mortar pipe lining of water mains. The Contractor must have successfully lined an aggregate amount of at least 100,000 linear feet of cast iron water main within the last five years. The experience of personnel with any other Contractor/Company does not qualify the Contractor; the qualifying experience shall be of the Contractor bidding the project.

B. The Bidder shall include information on the experience of the firm, the personnel assigned to the cleaning and lining work, and the experience of the crew leaders who will actually supervise and perform the field work, as well as information on all equipment that will be used for lining and piping/appurtenances for by-pass. The OWNER reserves the right to reject individual crew leaders due to either inadequate experience, or unsatisfactory/poor performance on the job (in the OWNER's sole opinion).

3.5 Bidder Qualifications – Cast Iron Replacement Contracts

A. Bidder shall have a minimum of five (5) consecutive years of experience as a prime Contractor self-performing replacement of cast iron water mains. The Contractor must have successfully replaced an aggregate amount of at least 100,000 linear feet

of cast iron water main within the last five years. The experience of personnel with any other Contractor/Company does not qualify the Contractor; the qualifying experience shall be of the Contractor bidding the project.

B. The Bidder shall include information on the experience of the firm, the personnel assigned to the replacement work, and the experience of the crew leaders who will actually supervise and perform the field work, as well as information on all equipment and piping/ appurtenances used for by-pass. The OWNER reserves the right to reject individual crew leaders due to either inadequate experience, or unsatisfactory/poor performance on the job (in the OWNER's sole opinion).

3.6 The Bidder must be able to field and properly equip at least two (2) or more crews to accomplish the replacement/rehabilitation of water mains and the replacement of lead water services.

3.7 The Bidder must show five (5) consecutive years of experience as a prime contractor for the replacement/rehabilitation method specified on the contract drawings, including the installation and replacement of water main piping and appurtenances, the replacement of lead water services, in both urban and suburban areas; working around congested underground utilities; tapping and extracting corporation stops; plugging exist taps; besides trench excavation, must be adept in trenchless technology techniques such as moling, hole-hogging, and pulling water services; coordinating with utility owners, property owners, and residents; resolving issues with the public quickly and effectively; and accomplishing temporary surface restorations daily followed by final surface restorations on both public and private property.

3.8 All prospective Bidders must certify their intent to perform at least fifty (50) percent of this Work with their own forces. Fifty percent of the work must include completion of the water main replacement/rehabilitation work as specified on the contract drawings and shall be completed by the Bidder (General Contractor) alone. The Bidder will describe any work that may be subcontracted in "Section 00430 – Prop. Subcontractor Supplier Listing".

3.9 The prime contractor (bidder) must self-perform the replacement/rehabilitation of the cast iron water mains as specified on the contract drawings.

ARTICLE 4 - EXAMINATION OF BIDDING DOCUMENTS, OTHER RELATED DATA, AND SITE

4.1 Subsurface and Physical Conditions

A. If any such information is available, the Bidding Documents will identify in the Information Available to Bidders:

1. Those reports of explorations and tests of subsurface conditions at or contiguous to the Site that were used in preparing the Bidding Documents.

2. Those drawings of physical conditions in or relating to existing surface and subsurface structures at or contiguous to the Site (except Underground Facilities) that were used in preparing the Bidding Documents. Unless otherwise stated on the Drawings or Contract Documents, site conditions as depicted are not based on an actual survey and may not show all utilities present. The Contractor is responsible for confirming the location of all underground utilities prior to the commencement of construction. The contractor shall be responsible for all underground utility lines and structures; active or not and shall maintain a close and constant contact will all utility companies or agencies involved.

B. Copies of reports and drawings referenced in Paragraph 4.01.A will be made available for review by the OWNER to any Bidder upon request. Those reports and drawings are not part of the Contract Documents, but the "technical data" contained therein upon which the Bidder is entitled to rely as provided in Paragraph 4.02 of the General Conditions (as modified by the Supplementary Conditions) has been identified and established through Paragraph 4.02 of the Supplementary Conditions. Bidder is responsible for any interpretation or conclusion that Bidder draws from any "technical data" or any other data, interpretations, opinions or information contained in such reports or shown or indicated in such drawings.

4.2 Underground Facilities

A. Information and data shown or indicated in the Bidding Documents with respect to existing Underground Facilities at or contiguous to the Site is based upon information and data furnished to the OWNER and ENGINEER by owners of such Underground Facilities, including OWNER, or others. The OWNER makes no claim to the accuracy nor completeness of the locations shown for existing Under Ground Facilities.

4.3 Hazardous Environmental Conditions

A. If any such information is available, the Bidding Documents will identify in the Information Available to Bidders those reports and drawings relating to a Hazardous Environmental Condition identified at the Site that were used in preparing the Bidding Documents.

B. Copies of reports and drawings referenced in Paragraph 4.03.A will be made available for review by the OWNER to any Bidder upon request. Those reports and drawings are not part of the Contract Documents, but the "technical data" contained therein upon which the Bidder is entitled to rely as provided in Paragraph 4.06 of the General Conditions (as modified by the Supplementary Conditions) has been identified and established through Paragraph 4.06 of the Supplementary Conditions. Bidder is responsible for any interpretation or conclusion that Bidder draws from any "technical data" or any other data, interpretations, opinions or information contained in such reports or shown or indicated in such drawings.

4.4 Provisions concerning responsibilities for the adequacy of data furnished to prospective Bidders with respect to subsurface conditions, other physical conditions and Underground Facilities, and possible changes in the Bidding Documents due to differing or unanticipated conditions appear in Paragraphs 4.02, 4.03, and 4.04 of the General Conditions (as may be modified by the Supplementary Conditions). Provisions concerning responsibilities for the adequacy of data furnished to prospective Bidders with respect to a Hazardous Environmental Condition at the Site, if any, and possible changes in the Contract Documents due to any Hazardous Environmental Condition uncovered or revealed at the Site which was not shown or indicated in the Drawings or Specifications or identified in the Contract Documents to be within the scope of the Work appear in Paragraph 4.06 of the General Conditions (as may be modified by the Supplementary Conditions).

4.5 On request, OWNER will provide Bidder access to the Site to conduct such examinations, investigations, explorations, tests, and studies as Bidder deems necessary for submission of a Bid. Bidder shall fill all holes and clean up and restore the Site to its former condition upon completion of such examinations, investigations, explorations, tests, and studies.

4.6 Reference is made to Article 7 of the General Conditions and Supplementary Conditions regarding any other work that may be performed at the Site by OWNER or others (such as utilities and other prime contractors) that relates to the Work for which a Bid is to be submitted. On request, OWNER will provide to each Bidder for examination access to or copies of any available contract documents (other than portions thereof related to price) for any other such work.

4.7 It is the responsibility of each Bidder before submitting a Bid to:

A. examine and carefully study the Bidding Documents, including any Addenda and the other related data identified in the Bidding Documents;

B. visit the Site and become familiar with and satisfy Bidder as to the general, local, and Site conditions that may affect cost, progress, and performance of the Work;

1. To visit the Site for the purposes of Article 4, Bidders must contact the OWNER at least 48 hours in advance of the date that Bidder wants to visit the Site to arrange access with the OWNER. Bidders shall not make or attempt to make any visits to the Site without making such arrangements with the OWNER in advance.

C. become familiar with and satisfy Bidder as to all federal, state, and local Laws and Regulations that may affect cost, progress, or performance of the Work;

D. carefully study any and all available reports of explorations and tests of subsurface conditions at or contiguous to the Site and any and all available drawings of physical conditions in or relating to existing surface or subsurface structures at or contiguous to the Site (except Underground Facilities) as identified and established through the Supplementary Conditions as provided in Paragraph 4.02 of the General Conditions, and carefully study all reports and drawings of a Hazardous Environmental Condition, if any, at the Site which are identified through the Supplementary Conditions as provided in paragraph 4.06 of the General Conditions;

E. obtain and carefully study (or assume responsibility for doing so) any and all available additional or supplementary examinations, investigations, explorations, tests, studies, and data, if any, concerning conditions (surface, subsurface, and Underground Facilities) at or contiguous to the Site which may affect cost, progress, or performance of the Work or which relate to any aspect of the means, methods, techniques, sequences, and procedures of construction to be employed by Bidder, including any specific means, methods, techniques, sequences, and procedures of construction expressly required by the Bidding Documents, and safety precautions and programs incident thereto;

F. agree at the time of submitting its Bid that no further examinations, investigations, explorations, tests, studies, or data are necessary for the determination of its Bid for performance of the Work at the price bid and within the times and in accordance with the other terms and conditions of the Bidding Documents;

G. become aware of the general nature of the work to be performed by the OWNER and others at the site that relates to the Work as indicated in the Bidding Documents;

H. correlate the information known to the Bidder, information and observations obtained from visits to the Site, reports and drawings identified in the Bidding Documents,

and all additional examinations, investigations, explorations, tests, studies, and data with the Bidding Documents;

I. promptly give the OWNER written notice of all conflicts, errors, ambiguities, or discrepancies that Bidder discovers in Bidding Documents and confirm that the written resolution thereof by OWNER is acceptable to Bidder; and,

J. determine that the Bidding Documents are generally sufficient to indicate and convey understanding of all terms and conditions for the performance of the Work.

4.8 The submission of a Bid will constitute an incontrovertible representation by Bidder that Bidder has complied with every requirement of this Article 4, that without exception the Bid is premised upon performing and furnishing the Work required by the Bidding Documents and applying any specific means, methods, techniques, sequences, and procedures of construction that may be shown or indicated or expressly required by the Bidding Documents, that Bidder has given the OWNER written notice of all conflicts, errors, ambiguities, and discrepancies that Bidder has discovered in the Bidding Documents and the written resolutions thereof by the OWNER are acceptable to Bidder, and that the Bidding Documents are generally sufficient to indicate and convey understanding of all terms and conditions for performing and furnishing the Work.

ARTICLE 5 - PRE-BID CONFERENCE

5.1 The time, date, location, and conditions for the Pre-Bid Conference, if any is planned, shall be as stated in the Invitation to Bid.

5.2 Representatives of the OWNER will be present at any planned pre-bid conference to discuss the project. The OWNER and/or Issuing Office will transmit to all prospective Bidders of record such Addenda as the OWNER considers necessary in response to questions arising at any such conference. Oral statements may not be relied upon and will not be binding or legally effective.

ARTICLE 6 - SITE AND OTHER AREAS

6.01 The Site is identified in the Bidding Documents. All additional lands and access thereto required for temporary construction facilities, construction equipment, or storage of materials and equipment to be incorporated in the Work are to be obtained and paid for by CONTRACTOR. Easements for permanent structures or permanent changes in existing facilities are to be obtained and paid for by OWNER unless otherwise provided in the Bidding Documents.

ARTICLE 7 - INTERPRETATIONS AND ADDENDA

7.1 All questions about the meaning or intent of the Bidding Documents are to be submitted to the OWNER in writing at least 10 calendar days prior to Bid opening. Interpretations or clarifications considered necessary by OWNER in response to such questions will be issued by Addenda mailed or delivered to all parties recorded by the Issuing Office as having received the Bidding Documents. Only questions answered by written Addenda will be binding. Oral or other interpretations or clarifications will be without legal effect. Bidders are responsible for verifying that their questions are received.

7.2 Addenda may be issued to clarify, correct, or change the Bidding Documents as deemed advisable by the OWNER.

ARTICLE 8 - BID SECURITY

8.1 A Bid must be accompanied by a Bid security made payable to the City of Providence and Providence Water for an amount of Bidder's maximum Bid price as stated in the Cover Documents and/or the Invitation to Bid, and in the form of a certified check or a Bid Bond issued by a surety meeting the requirements of the Cover Documents and paragraphs 5.01 and 5.02 of the General Conditions (as may be modified by the Supplementary Conditions). Failure to submit a proper Bid security will result in the disqualification of the Bid.

8.2 The Bid security of the Successful Bidder will be retained until such Bidder has executed the Contract, furnished the required contract securities and insurances, and met any other conditions of the Notice of Award and Contract Documents, whereupon the Bid security will be returned. If the Successful Bidder fails to execute and return the Contract within 15 days of its delivery to the Successful Bidder, or to furnish the required contract securities and insurances within the times set forth in the Contract Documents, the OWNER may annul the award and the Bid security of that Bidder will be forfeited to the OWNER. The Bid security of other Bidders whom the OWNER believes to have a reasonable chance of receiving the award may be retained until the earlier of 7 days after the execution date of the Agreement or 61 days after the opening of Bids, whereupon Bid security furnished by such Bidders will be returned unless otherwise agreed upon.

8.3 Bid security of other Bidders whom OWNER believes do not have a reasonable chance of receiving the award will be returned within a reasonable period of time after the Bid opening.

ARTICLE 9 - CONTRACT TIMES

9.1 The number of days in which, or the date by which, the Work is to be completed and ready for final payment are set forth in the Invitation to Bid and/or the Bid Form.

ARTICLE 10 - LIQUIDATED DAMAGES

10.1 Provisions for liquidated damages, if any, are set forth in the Invitation to Bid and/or the Bid Form.

ARTICLE 11 - SUBSTITUTE AND "OR-EQUAL" ITEMS

11.1 The Contract, if awarded, will be on the basis of materials and equipment specified or described in the Bidding Documents, including any Addenda issued prior to the receipt of Bids. The materials and equipment described in the Bidding Documents establish a standard of required type, function, quality, and performance to be met by any proposed substitute or "or-equal" item. Whenever it is specified or described in the Bidding Documents that a substitute or "or-equal" item of material or equipment may be furnished or used by the CONTRACTOR if acceptable to the OWNER, application for such acceptance will not be formally considered by the OWNER until after the execution date of the Agreement. The procedure for submission of any such application by the CONTRACTOR and consideration by the OWNER is set forth in the Cover Documents, General Conditions and Supplementary Conditions, and may be supplemented in the General Requirements. **The burden of proof of the merit of a proposed substitute or "or-equal" item is solely upon Bidder, and the OWNER's decision of approval or disapproval of a proposed item will be final. The Bidder shall not rely on an "assumption" of approval by the OWNER in preparing a Bid**. **Alternates must be submitted for review at least one week prior to Pre-Bid Meeting Addendum.**

ARTICLE 12 - SUBCONTRACTORS, SUPPLIERS, APPRENTICE UTILIZATION, & LOCAL HIRING

12.1 If the Bid Form requires the listing of Proposed Subcontractors and/or Suppliers the Bidder shall provide the names and requested information for all Subcontractors and/or Suppliers whose prices the Bidder used in preparing the Bid and/or who Bidder knows to intend to enter into agreements with to participate in any portion of the Work. Failure to provide such requested information may, at the OWNER's sole discretion, result in the Bid being considered non-responsive and rejected.

12.2 If the Contract Documents require the identity of Subcontractors, Suppliers, individuals, or entities to be submitted to OWNER prior to the executed date of the Agreement or prior to that entities participation in the Work, the Successful Bidder, and any other Bidder so requested, shall within 5 days after the Bid opening or at other such time requested by the OWNER or stated in the Contract Documents submit to OWNER a list of all such Subcontractors, Suppliers, individuals, or entities proposed for stated portions of the Work. Such list shall be accompanied by an experience statement with pertinent information regarding similar projects and other evidence of qualification for each such Subcontractor, Supplier, individual, or entity if requested by OWNER. If the OWNER

after due investigation, has reasonable objection to any proposed Subcontractor, Supplier, individual, or entity, OWNER may request Successful Bidder to submit a substitute in which case Successful Bidder shall submit an acceptable substitute. If such substitution is made after contract execution the provisions of Paragraph 6.06 of the General Conditions will be followed.

12.3 CONTRACTOR shall not be required to employ any Subcontractor, Supplier, individual, or entity against whom CONTRACTOR has reasonable objection.

12.4 This contract is subject to the requirements of following Sections of the Providence Code of Ordinances: Section 21-28.1, "Qualifications for parties doing business with the City"; Section 2-169.1, "Local Hiring (First Source)."

Refer to Specification Section 00490 - "Apprentice Utilization, Local Hiring-Requirements, & Air Quality Protocols."

ARTICLE 13 - PREPARATION OF BID

13.1 The Bid Form is included with the Bidding Documents.

13.2 All blanks on the Bid Form shall be completed by printing in ink or by typewriter, and the Bid signed in ink. A Bid price shall be provided for each item requiring a price as listed therein. The Bidder's Blank form provided at the end of the Bid Form Section shall be completely filled in with the information required and signed.

13.3 A Bid by a corporation shall be executed in the corporate name by the president or vice-president or other corporate officer authorized to sign for the corporation. The corporate seal shall be affixed if indicated on the form and attested by the secretary or assistant secretary when indicated. The corporate address and state of incorporation shall be provided where indicated on the form.

13.4 A Bid by a partnership shall be executed in the partnership name and signed by a partner (whose title must be provided) who is authorized to legally sign for the partnership. The address of the partnership shall be shown where indicated on the form.

13.5 A Bid by a limited liability company shall be executed in the name of the firm by a member authorized to legally sign for the company. The state of formation of the firm and the address of the firm must be shown where indicated on the form.

13.6 A Bid by an individual shall show the Bidder's name and address.

13.7 A Bid by a joint venture shall be executed by each joint venture company participant by using duplicate pages of the signature page of the form as necessary for each signature. The address of the joint venture must be shown where indicated on the form.

13.8 All names shall be typed or printed in ink below the signatures or in space, if provided, on the form.

13.9 The Bid shall contain an acknowledgment of receipt of all Addenda, the numbers of which shall be filled in on the Bid Form.

13.10 The telephone number and address of the Bidder for communications regarding the Bid shall be shown.

13.11 The Bid shall contain evidence of Bidder's authority and qualification to do business in the State of Rhode Island or covenant to obtain such qualification prior to award of the Contract. Bidder's State of Rhode Island contractor license number(s), if any or where such license(s) are required for the Work, shall be shown on the Bid Form or provided with the Bid.

13.12 The Bid submission must include, complete, all pages of the Bid Form, including the Bidder's Blank, the Bid security, and, if included in the Bidding Documents, a Listing of Proposed Subcontractors and Suppliers, a Contractor Qualification Statement, Apprentice Utilization, and Bidder Information - MBE/WBE Participation Requirements.

ARTICLE 14 - BASIS OF BID; EVALUATION OF BIDS

14.1 Lump Sum

A. When a lump sum Bid for the Work, for individual items of the Work, or for alternates is called for, Bidder shall submit a price for each such item on a lump sum basis as set forth in the Bid Form.

B. The price for each alternate selected by the OWNER will be added to or deleted from the base Bid as indicated on the Bid Form and applied in the evaluation of Bids.

14.2 Unit Price

A. When unit price Bids are called for in the Bid Form for individual items of the Work, Bidder shall submit a price for each such item on a unit price basis as set forth in the Bid Form.

B. The total estimated price for each item bid on a unit price basis will be determined as the product of the estimated quantity of the item and the unit price Bid for the item. The final quantities and Contract Price will be determined in accordance with paragraph 11.03 of the General Conditions.

14.3 Bid Evaluation

A. Discrepancies between the multiplication of units of Work and unit bid prices will be resolved in favor of the unit bid prices. Discrepancies between the indicated sum of any column and the correct sum thereof will be resolved in favor of the correct sum. Discrepancies between words and figures will be resolved in favor of the words.

B. Bid prices for lump sum and unit price basis items shall include such amounts as the Bidder deems proper for overhead and profit, including on account of cash allowances, if any, included in the Bid Form and as provided in paragraph 11.02 of the General Conditions.

14.4 Award Evaluation

A. Bidders shall be ranked according to the following **objective measurable** criteria:

(1) The lowest Total Bid Price Amount (resolved in favor of corrected sums) submitted for Part 1 of the Bid Schedule Summary;
(2) The bidder's Qualifications, as set forth in Article 3 of Section 00200, Instructions to Bidders, and as indicated in the bidder's Contractor Qualification Statement;
(3) The adequacy of the bidder's financial resources, including its ability to comply with the requirements of Article 5 of Section 00700, General Terms and Conditions;
(4) The quality of work performed previously by the bidder for the Owner, if any, and the quality of work performed on comparably sized projects for other entities;
(5) The record of the bidder in accomplishing work on other, similar projects in the required time frame;
(6) The bidder's ability to obtain the necessary materials, as set forth in Section 00300 - 2, List of Approved Materials/Manufacturers for use in the Providence Water Distribution System; and
(7) Consistency with historical unit pricing of Unit Rates and Unit Prices for bid items for the related contract work.

B. The intent is to Award one (1) contract to the responsive and responsible Bidder whose base bid is the lowest evaluated or responsive bid price, in accordance with the foregoing criteria.

ARTICLE 15 - SUBMISSION OF BID

15.1 The Bidding Documents furnished to each prospective Bidder include a Bid Form. The Bid Form shall be completely filled out and all information requested be provided, and

the Bid Form shall be submitted with the Bid security and with all information and data required by the Cover Documents, the Advertisement or Invitation to Bid, these Instructions to Bidders, and the Bid Form.

15.2 A Bid shall be submitted no later than the date and time prescribed and at the place indicated in the Advertisement or Invitation to Bid or Cover Documents. The Bid shall be enclosed in an opaque sealed envelope plainly marked with the Project title, the name and address of the Bidder, and shall be accompanied by the bid security and other required documents. The Bid shall be addressed to the Board of Contract and Supply, Department of the City Clerk, City Hall, Providence, Rhode Island. If a Bid is to be sent by mail or other delivery system, the sealed envelope containing the Bid shall be enclosed in a separate envelope plainly marked on the outside with the notation "BID ENCLOSED". Communications to the Board of Contract and Supply that are not competitive sealed bids should have "NOT A BID" written on the envelope.

ARTICLE 16 - MODIFICATION AND WITHDRAWAL OF BID

16.1 A Bid may be modified or withdrawn by an appropriate written document duly executed in a manner that a Bid must be executed and delivered to the place where Bids are to be submitted prior to the date and time for the opening of Bids.

ARTICLE 17 - OPENING OF BIDS

17.1 Bids will be opened at the time and place indicated in the Advertisement or Invitation to Bid or Cover Documents and, unless obviously non-responsive, read aloud publicly. An abstract of the amounts of base Bids and alternates, if any, will be made available to Bidders within a reasonable amount of time after the opening of Bids.

ARTICLE 18 - BIDS TO REMAIN SUBJECT TO ACCEPTANCE

18.1 All Bids will remain subject to acceptance for the period of time stated in the Bid Form or Cover Documents, but OWNER may, in its sole discretion, release any Bid and return any Bid security prior to the end of this period.

ARTICLE 19 - AWARD OF CONTRACT

19.1 OWNER reserves the right to reject any or all Bids, including without limitation nonconforming, non-responsive, unbalanced, or conditional Bids. OWNER further reserves the right to reject the Bid of any Bidder whom it finds, after reasonable inquiry and evaluation, to be non-responsible. OWNER may also reject the Bid of any Bidder if

OWNER believes that it would not be in the best interest of the Project, the City of Providence, or Providence Water to make an award to that Bidder. OWNER also reserves the right to waive all informalities not involving price, time, or changes in the Work and to negotiate contract terms with the Successful Bidder.

19.2 More than one Bid for the same Work or Project from an individual or entity under the same or different names will not be considered. Reasonable grounds for believing that any Bidder has an interest in more than one Bid for the Work may be cause for disqualification of that Bidder and the rejection of all Bids in which that Bidder has an interest.

19.3 In evaluating Bids, OWNER will consider whether or not the Bids comply with the prescribed requirements, and such alternates, unit prices and other data, as may be requested in the Bid Form, Advertisement, Invitation and Instructions to Bidders or prior to the Notice of Award.

19.4 In evaluating Bidders, OWNER will consider the qualifications and experience of Bidders and may consider the qualifications and experience of Subcontractors, Suppliers, and other individuals or entities proposed for those portions of the Work for which the identity of Subcontractors, Suppliers, and other individuals or entities are submitted as provided for in the Bid Form.

19.5 OWNER may conduct such investigations as OWNER deems necessary to establish the responsibility, qualifications, and financial ability of Bidders, proposed Subcontractors, individuals, or entities to perform the Work in accordance with the Contract Documents.

19.6 If the Contract is to be awarded, OWNER will award the Contract to the Bidder whose Bid is in the best interests of the Project, the City of Providence, and Providence Water.

ARTICLE 20 - CONTRACT SECURITY AND INSURANCE

20.1 Article 5 of the General Conditions, as may be modified by the Supplementary Conditions, sets forth OWNER's requirements as to performance and payment Bonds and insurance. When the Successful Bidder receives notice of award, the Successful Bidder shall submit such Bonds and insurance certificates within the time set forth in the Contract Documents.

ARTICLE 21 - SIGNING OF CONTRACT

21.1 When the OWNER gives a Notice of Award to the Successful Bidder, the Successful Bidder shall deliver the Bonds and insurance certificates required by the Contract Documents within the time set forth therein for the OWNER's preparation of the Agreement. The OWNER will prepare the Agreement and provide the Agreement to the

Successful Bidder for execution. The Successful Bidder shall execute and return the Agreement to the OWNER within 15 days of the date of delivery of the Agreement from the OWNER. The OWNER shall execute the Agreement and return 1 record copy to the Successful Bidder.

ARTICLE 22 - TAX EXEMPTION

22.1 OWNER is exempt from sales taxes on materials and equipment permanently incorporated into the Work. A sales tax exemption certificate will be available from the OWNER. Such taxes shall not be included in the Bid. Refer to Paragraph 6.10 of the General Conditions, as may be modified by the Supplementary Conditions, for additional information.

ARTICLE 23 - PAYMENT AND RETAINAGE

23.01 Provisions concerning payments to CONTRACTOR and retainage by OWNER are set forth in Article 14 of the General Conditions and Supplementary Conditions. Retainage for this Contract shall be **10%** for each Application for Payment. At the Owner's sole discretion, retainage held from prior Applications for Payment may be released in the current Application for Payment.

ARTICLE 24 - LAWS AND REGULATIONS, WAGE RATES

24.1 All federal, state, and local laws, ordinances, and regulations applicable to the Work, labor, or materials or equipment used or incorporated into the Work, or means and methods used in the Work shall be observed and complied with fully; the language of such laws, ordinances, and regulations shall be deemed as included in the Contract Documents the same as if written fully therein. The Bidder shall be fully familiar with and informed of such laws, ordinances, and regulations, and if chosen as the Successful Bidder shall become responsible for full compliance with same.

24.2 Where the Bidding or Contract Documents bring attention to specific laws, ordinances, and regulations, or provisions of such laws, ordinances, and regulations, such attention or notice shall not relieve the Bidder or Successful Bidder of responsibility for full compliance with all applicable laws, ordinances, and regulations, or provisions of such.

24.3 Paragraph 14.02.A.4 and Article 18 of the Supplementary Conditions set forth requirements for compliance with State of Rhode Island General Laws, Chapters 37-12 and 37-13, and prevailing Wage Rate provisions. The Successful Bidder shall conform to such requirements and Bids must be prepared accordingly. **Reference is hereby made to the Appendices of Section 00800 - Supplementary Conditions of the Contract**

Specifications for Special Notes pertaining to Bonds, Labor and Payment, Minority Business and Prevailing Wage Rates.

24.4 **This project is also subject to the requirements of the Davis-Bacon (DB) prevailing wage regulations, as administered by Environmental Protection Agency (EPA) under the FY 2013 Appropriations Act. Reference is made to Appendix D of the Contract Specifications for Attachment 2 of the Drinking Water State Revolving Fund program regarding the federal DB prevailing wage requirements.**

24.5 **This project is also subject to the application of American Iron and Steel (AIS) requirements to the FY 2021 and FY 2022 Drinking Water State Revolving Fund Assistance Agreements, as administered by the Environmental Protection Agency (EPA), for projects associated with the construction, alteration, maintenance, or repair of public water systems. Reference is made to Appendix E of the Contract Specifications for the USEPA Memorandum, dated April 7, 2017.**

24.6 Bidder's attention is directed to permitting and licensing requirements of federal, state, and local laws, ordinances, and regulations applicable to the Work. Bidders must be able to demonstrate full compliance with all such requirements, including but not limited to applicable chapters of Titles 5 and 28 of the State of Rhode Island General Laws, either as required by the Bidding Documents and Contract Documents or as requested by the OWNER. By the submission of a Bid the Bidder represents to the OWNER that the Bidder is in full compliance with such requirements.

END of SECTION

SECTION 00300

INFORMATION AVAILABLE TO BIDDERS

SECTION 00300
INFORMATION AVAILABLE TO BIDDERS

1.1 The information made available to the Bidder in this Section is available for the Bidder's review, but is not intended to be included as a part of the Contract Documents. The Bidder's attention is directed to the Instructions to Bidders, the General Conditions, and the Supplementary Conditions for information pertaining to the use of these documents.

2.1 The information made available by this Section is available for Bidder review at 125 Dupont Dr., Providence, RI 02907. To schedule an appointment, call Norm Ripstein at (401) 521-6300 ext. 7212 or Roger Biron at (401) 521-6300 ext. 7285

3.1 The following information and documents may be made available to Bidders:

A. Providence Water "Distribution Sheets"

B. Providence Water "Requirements for Water Mains, Services, and Appurtenances"

C. City of Providence "Standards to be Employed by Public Utility Operators When Restoring Any of the Streets, Lanes and Highways in Providence" (the "Standards"), dated June 2008.

4.1 The following information is attached herewith as part of this section of the Contract Specifications, or has been included in the respective Appendices as noted below.

A. Contract Drawings - Appendix A

B. Typical Construction Details - Appendix B

C. RIDOH DWSRF Contract Specifications Package - Appendix C

D. National Grid, "Cast Iron Gas Main Encroachment"- Appendix G

E. "List of Approved Materials/Manufacturers for use in the Providence Water Distribution System" - Attachment 1 (page 00300 - 2)

4.1.1 The attached National Grid guidelines, which consist of sketches and related criteria pertaining to cast-iron gas main encroachments, are for informational purposes only. The Contractor shall notify National Grid of locations where cast iron gas mains are exposed to the limits indicated, where cast iron gas mains are parallel to excavations as noted, and where cast iron gas main bell and spigot joints are exposed. This information is directly furnished to Providence Water by National Grid.

4.1.2 Supplemental typical construction details have been developed in connection with this project, including standard details obtained from Providence Water. Reference is made to Appendix B of these Contract Specifications for "Typical Construction Details" pertaining to water main construction and the appurtenant work.

ATTACHMENT 1

LIST OF APPROVED MATERIALS / MANUFACTURERS
FOR USE IN THE
PROVIDENCE WATER DISTRIBUTION SYSTEM
(As of January 1, 2019)

DUCTILE IRON PIPE

Atlantic States Cast Iron Pipe Co.
American DI Pipe Co.
U.S. Pipe & Foundry Co.
Note: All DI pipe must be zinc coated

DUCTILE IRON FITTINGS

Tyler/Union Foundry Co. – US made only
US Pipe & Foundry Co. – US made only
Star Pipe Products – US made only
Note: All fittings must be zinc coated

VALVES

American
Clow Valve Co.
Kennedy Valve
M&H Valve Co.
Mueller Co.
U.S. Pipe & Foundry Co.
AVK

BUTTERFLY VALVES (16" and larger)

Mueller Co.
Henry Pratt Co.

VALVE AND SERVICE BOXES

Tyler Union / Biby – US made only
Bingham & Taylor
Mueller Co.

PIPE COUPLINGS

ROMAC Industries, Inc.
Smith-Blair, Inc.
Baker
Total Piping Solutions, Inc. (Hymax)

SERVICE ADAPTER COUPLINGS, PLASTIC

The Harrington Corp (HARCO)

FIRE HYDRANTS

Kennedy Guardian Hydrant - K81D, by Kennedy Valve (Must be "Hydra-Shield - Custodian" ready for installation in Providence only)

Mueller Super Centurion - A423 (Must be "Hydra-Shield - Custodian" ready for installation in Providence only)

MECHANICAL JOINT RESTRAINT FOR DUCTILE IRON PIPE AND FITTINGS

EBAA Iron Sales, Inc. - MEGALUG MJ Retainer Gland
Series 1100 – MJ Gland
Series 1100SDB – Mid Span Restraint
Tyler Union - Series 1000 TUFGRIP MJ Retainer Gland – US made only
Star National Products - "Star Tie-Anchor III AC Joint Restrainer"

JOINT RESTRAINT FOR DUCTILE IRON PIPE-GASKETED

U.S. Pipe & Foundry Co. - Field Lok 350 Gasket
McWane – Sure Stop 350 Gasket
American – Fast-Grip Gasket

SERVICE BRASS – Must Meet Lead Free Standard

A.Y. McDonald Manufacturing Co.
Cambridge Brass
Mueller Co.
Red Hed Manufacturing
The Ford Meter Box Co.

A Providence Water guidance document, This list is subject to change without notice. Customers or contractors are responsible for contacting Providence Water to verify their selection of materials prior to starting any construction.

CONTRACT 4-21,
UPPER SOUTH PROVIDENCE,
(PLAIN ST.)

SECTION 00410

BIDFORM

CLEANING & LINING

SECTION 00410
BID FORM

PROJECT IDENTIFICATION:

Replacement/Rehabilitation of Water Mains and Appurtenances
within Providence Water's Distribution System
CONTRACT 4-21

THIS BID IS SUBMITTED TO:

City of Providence
Board of Contract and Supply
Department of the City Clerk
City Hall
Providence, Rhode Island 02903

1.01 The undersigned Bidder proposes and agrees, if this Bid is accepted, to enter into an Agreement with OWNER, in a form to be prepared by the OWNER consistent with the Bidding Documents, to perform all Work as specified or indicated in the Bidding Documents for the prices and within the times indicated in this Bid and in accordance with the other terms and conditions of the Bidding Documents.

2.01 Bidder accepts all of the terms and conditions of the Invitation to Bid and Instructions to Bidders, including without limitation those dealing with the disposition of Bid security. The Bid will remain subject to acceptance for 60 days after the Bid opening, or for such longer period of time that Bidder may agree to in writing upon request of OWNER.

3.1 In submitting this Bid, Bidder represents, as set forth in the Bidding Documents and the Agreement, that:

A. Bidder has examined and carefully studied the Bidding Documents, the other related data identified in the Bidding Documents, and any and all Addenda that Bidder has listed on the Bidder's Blank at the end of this Section, receipt of all of which is hereby acknowledged.

B. As required to be indicated on the Bidder's Blank at the end of this Section, Bidder acknowledges by so indicating that either this Bid conforms with the requirements of the Bidding Documents, or is based on modifications/exceptions taken to the Bidding Documents; any modifications have been provided by Bidder with this Bid as required.

C. Bidder has visited the Site and become familiar with and is satisfied as to the general, local, and Site conditions that may affect cost, progress, and performance of the Work.

D. Bidder is familiar with and is satisfied as to all federal, state, and local Laws and Regulations that may affect cost, progress, and performance of the Work.

E. Bidder has carefully studied all: (1) reports of explorations and tests of subsurface conditions at or contiguous to the Site and all drawings of physical conditions in or relating to existing surface or subsurface structures at or contiguous to the Site (except Underground Facilities) which, if any, have been identified in the Bidding Documents as provided in Paragraph 4.02 of the General Conditions (as modified by the Supplementary Conditions), and (2) reports and drawings of a Hazardous Environmental Condition, if any, which have been identified in the Bidding Documents as provided in Paragraph 4.06 of the General Conditions (as modified by the Supplementary Conditions).

F. Bidder has obtained and carefully studied (or assumes responsibility for having done so) all additional or supplementary examinations, investigations, explorations, tests, studies, and data concerning conditions (surface, subsurface, and Underground Facilities) at or contiguous to the Site which may affect cost, progress, or performance of the Work or which relate to any aspect of the means, methods, techniques, sequences, and procedures of construction to be employed by the Bidder, including applying the specific means, methods, techniques, sequences, and procedures of construction expressly required by the Bidding Documents to be employed by the Bidder, safety precautions and programs incident thereto.

G. Bidder does not consider that any further examinations, investigations, explorations, tests, studies, or data are necessary for the determination of this Bid for performance of the Work at the price(s) bid and within the times and in accordance with the other terms and conditions of the Bidding Documents.

H. Bidder is aware of the general nature of any work to be performed by OWNER and/or others at the Site that relates to the Work as indicated in the Bidding Documents.

I. Bidder has correlated the information known to Bidder, information and observations obtained from visits to the Site, reports and drawings identified in the Bidding Documents, and all additional examinations, investigations, explorations, tests, studies, and data with the Bidding Documents.

J. Bidder has given OWNER written notice of all conflicts, errors, ambiguities, or discrepancies that Bidder has discovered in the Bidding Documents, and the resolution thereof by OWNER is acceptable to Bidder.

K. The Bidding Documents are generally sufficient to indicate and convey understanding of all terms and conditions for the performance of the Work for which this Bid is submitted.

4.01 Bidder further represents that this Bid is genuine and not made in the interest of or on behalf of any undisclosed individual or entity and is not submitted in conformity with any agreement or rules of any group, association, organization, or corporation; Bidder has not directly or indirectly induced or solicited any other Bidder to submit a false or sham Bid; Bidder has not solicited or induced any individual or entity to refrain from bidding; and Bidder has not sought by collusion to obtain for itself any advantage over any other Bidder or over OWNER.

5.1 Bidder agrees that the Work will be completed and ready for final payment in accordance with Paragraph 14.07.B of the General Conditions, as modified by Paragraph 14.07.B.1 of the Supplementary Conditions, within the time frame specified for each project assignment as provided in Paragraph 2.03 of the General Conditions, as modified by Paragraph 2.03.A of the Supplementary Conditions.

5.2 Bidder accepts the provisions of the Bidding Documents as to liquidated damages, and in the event of failure to complete the Work within the times specified above agrees to pay **$5,500** per calendar day that completion is late beyond the specified times.

6.1 The following documents are attached to and made a condition of this Bid:

A. Required Bid security;

B. Listing of proposed Subcontractors, Suppliers, and other individuals and entities required to be identified by the Bidding Documents;

C. Contractor Qualification Statement with supporting documentation required by the Bidding Documents.

7.1 The terms used in this Bid with initial capital letters have the meanings indicated in the Instructions to Bidders, the General Conditions, and the Supplementary Conditions.

BOARD OF CONTRACT AND SUPPLY
CITY OF PROVIDENCE, RHODE ISLAND

BID FROM:

Company Name: _____

(SEAL)

If incorporated, State of Incorporation: _____

Date of Incorporation: _____

Type of Business (from incorporation papers): _____

By: _____
(Signature - attach evidence of authority to sign if not an individual submitting Bid)

Name (typed or printed): _____

Title: _____

Date: _____

Business Address: _____

_____

Phone No. _____ Fax No. _____

Bidder State of Rhode Island License Information:

License No.	Type of License/Trade Licensed
_____	_____
_____	_____
_____	_____

BOARD OF CONTRACT AND SUPPLY
CITY OF PROVIDENCE, RHODE ISLAND

BID FORM 1: Bidders Blank

Refer to page 6 in Section "00000---BCS Terms & Requirements for Bidding (Instructions for Submission)"

BOARD OF CONTRACT AND SUPPLY
CITY OF PROVIDENCE, RHODE ISLAND

BID FORM 2: Certification of Bidder

(Non-Discrimination/Hiring)

Refer to page 7 in Section "00000---BCS Terms & Requirements for Bidding (Instructions for Submission)"

PROVIDENCE WATER

Tap Water Delivers

BID FORM 3: Bidder Certification

50% Performance of Work

Refer to page 7-1 in Section "00000---BCS Terms & Requirements for Bidding (Instructions for Submission)"

Part 1

UNIT RATES

for Water Main Replacement & Rehabilitation Work

1. Furnish & Install 4-inch D.I. Water Main

80 LF
Est. Qty.

_____
Price per LF (Figures)

_____
Price per Linear Foot (Written)

_____
Total Amt. Bid (Figures)

2. Furnish & Install 6-inch D.I. Water Main

1,000 LF
Est. Qty.

_____
Price per LF (Figures)

_____
Price per Linear Foot (Written)

_____
Total Amt. Bid (Figures)

3. Furnish & Install 8-inch D.I. Water Main

20 LF
Est. Qty.

_____
Price per LF (Figures)

_____
Price per Linear Foot (Written)

_____
Total Amt. Bid (Figures)

4. Furnish & Install 12-inch D.I. Water Main

3,900 LF
Est. Qty.

_____
Price per LF (Figures)

_____
Price per Linear Foot (Written)

_____
Total Amt. Bid (Figures)

5. Furnish & Install 16-inch D.I. Water Main

20 LF
Est. Qty.

_____
Price per LF (Figures)

_____
Price per Linear Foot (Written)

_____
Total Amt. Bid (Figures)

6. Furnish & Install 20-inch D.I. Water Main

20 LF
Token Qty.

_____
Price per LF (Figures)

_____
Price per Linear Foot (Written)

_____
Total Amt. Bid (Figures)

Part 1

7. Furnish & Install Ductile-Iron Pipe Fittings

5,300 LBS
Est. Qty.

Price per LB (Figures)

Price per Pound (Written)

Total Amt. Bid (Figures)

8. Furnish & Install 4-Inch Gate Valve

3 EA
Est. Qty.

Price per Each (Figures)

Price per Each (Written)

Total Amt. Bid (Figures)

9. Furnish & Install 6-Inch Gate Valve

31 EA
Est. Qty.

Price per Each (Figures)

Price per Each (Written)

Total Amt. Bid (Figures)

10. Furnish & Install 8-Inch Gate Valve

2 EA
Token Qty.

Price per Each (Figures)

Price per Each (Written)

Total Amt. Bid (Figures)

11. Furnish & Install 12-Inch Gate Valve

15 EA
Est. Qty.

Price per Each (Figures)

Price per Each (Written)

Total Amt. Bid (Figures)

31. Insertion Valves

c. Furnish & Install 12" Insertion Valve

4 EA
Est. Qty.

Price per Each (Figures)

Price per Each (Written)

Total Amt. Bid (Figures)

Part 1

12. Furnish & Install New Fire Hydrant Assembly

a. 6" Branch

23 EA	_____
Est. Qty.	Price per Each (Figures)

_____ _____

Price per Each (Written) Total Amt. Bid (Figures)

b. 8" Branch

2 EA	_____
Token Qty.	Price per Each (Figures)

_____ _____

Price per Each (Written) Total Amt. Bid (Figures)

13. Furnish & Install 2-Inch Blow-off Assembly

2 EA	_____
Token Qty.	Price per Each (Figures)

_____ _____

Price per Each (Written) Total Amt. Bid (Figures)

Part 1

14. Lead Service Replacement

a. Furnish and Install 1" Copper Tubing (Trenchless Technology)

370 LF
Est. Qty.

_____
Price per LF (Figures)

_____
Price per Linear Foot (Written)

_____
Total Amt. Bid (Figures)

b. Furnish and Install 1" Copper Tubing (Open-Cut Trench)

170 LF
Est. Qty.

_____
Price per LF (Figures)

_____
Price per Linear Foot (Written)

_____
Total Amt. Bid (Figures)

c. Furnish and Install 1" Corporation Stop, Curb Stop, and Service Box
(Includes Corp, Curb Stop & Service Box)

26 EA
Est. Qty.

_____
Price per Each (Figures)

_____
Price per Each (Written)

_____
Total Amt. Bid (Figures)

15. Lead Service Replacement

a. Furnish and Install 1-1/2" Copper Tubing (Trenchless Technology)

30 LF
Token Qty.

_____
Price per LF (Figures)

_____
Price per Linear Foot (Written)

_____
Total Amt. Bid (Figures)

b. Furnish and Install 1-1/2" Copper Tubing (Open-Cut Trench)

15 LF
Token Qty.

_____
Price per LF (Figures)

_____
Price per Linear Foot (Written)

_____
Total Amt. Bid (Figures)

c. Furnish and Install 1-1/2" Corporation Stop, Service Saddle, Curb Stop, and Service Box
(Includes Corp, Service Saddle, Curb Stop & Service Box)

1 EA
Token Qty.

_____
Price per Each (Figures)

_____
Price per Each (Written)

_____
Total Amt. Bid (Figures)

Part 1

16. Lead Service Replacement

a. Furnish and Install 2" Copper Tubing (Trenchless Technology)

30 LF
Token Qty.

Price per LF (Figures)

Price per Linear Foot (Written)

Total Amt. Bid (Figures)

b. Furnish and Install 2" Copper Tubing (Open-Cut Trench)

20 LF
Est. Qty.

Price per LF (Figures)

Price per Linear Foot (Written)

Total Amt. Bid (Figures)

c. Furnish and Install 2" Corporation Stop, Service Saddle, Curb Stop, and Service Box
(Includes Corp, Service Saddle, Curb Stop & Service Box)

1 EA
Est. Qty.

Price per Each (Figures)

Price per Each (Written)

Total Amt. Bid (Figures)

Part 1

17. Reconnect Existing Copper Water Services

a. Reconnect Existing 3/4" Copper Service
(Including corporation stop, copper tubing, coupling, and appurtenances)

2 EA
Est. Qty.

Price per Each (Figures)

Price per Each (Written)

Total Amt. Bid (Figures)

b. Reconnect Existing 1" Copper Service
(Including corporation stop, copper tubing, coupling, and appurtenances)

2 EA
Token Qty.

Price per Each (Figures)

Price per Each (Written)

Total Amt. Bid (Figures)

c. Reconnect Existing 1-1/2" Copper Service
(Including corporation stop, copper tubing, coupling, and appurtenances)

2 EA
Est. Qty.

Price per Each (Figures)

Price per Each (Written)

Total Amt. Bid (Figures)

d. Reconnect Existing 2" Copper Service
(Including corporation stop, copper tubing, coupling, and appurtenances)

2 EA
Est. Qty.

Price per Each (Figures)

Price per Each (Written)

Total Amt. Bid (Figures)

Part 1

18. Cleaning and Lining Water Mains

a. Clean & Line Existing 6" C.I. Water Main
(Including the removal of existing 6" valves and appurtenances during the cleaning and lining process)

6,900 LF
Est. Qty.

_____ Price per LF (Figures)

_____ Price per Linear Foot (Written)

_____ Total Amt. Bid (Figures)

b. Clean & Line Existing 8" C.I. Water Main
(Including the removal of existing 8" valves and appurtenances during the cleaning and lining process)

100 LF
Token Qty.

_____ Price per LF (Figures)

_____ Price per Linear Foot (Written)

_____ Total Amt. Bid (Figures)

c. Clean & Line Existing 12" C.I. Water Main
(Including the removal of existing 12" valves and appurtenances during the cleaning and lining process)

100 LF
Token Qty.

_____ Price per LF (Figures)

_____ Price per Linear Foot (Written)

_____ Total Amt. Bid (Figures)

d. Obstructions
(Associated with the Cleaning and Lining Operations for the existing 6", 8", and 12" C.I. water mains within the contract area)

1 EA
Token Qty.

_____ Price per Each (Figures)

_____ Price per Each (Written)

_____ Total Amt. Bid (Figures)

Part 1

19. Temporary By-Pass Piping System

a. Furnish and Install Temporary 2" By-Pass Piping
(Including temporary services and hydrants)

5,600 LF
Est. Qty.

_____
Price per LF (Figures)

_____
Price per Linear Foot (Written)

_____
Total Amt. Bid (Figures)

b. Furnish and Install Temporary 4" By-Pass Piping
(Including temporary services and hydrants)

4,500 LF
Est. Qty.

_____
Price per LF (Figures)

_____
Price per Linear Foot (Written)

_____
Total Amt. Bid (Figures)

c. Furnish and Install Temporary 6" By-Pass Piping
(Including temporary services and hydrants)

6,700 LF
Est. Qty.

_____
Price per LF (Figures)

_____
Price per Linear Foot (Written)

_____
Total Amt. Bid (Figures)

Part 1

UNIT RATES for Earthwork and Restoration within Public Space

20. Earthwork

a. Gravel Borrow

2,800 TN
Est. Qty.

Price per TN (Figures)

Price per Ton (Written)

Total Amt. Bid (Figures)

b. Test Pits

50 CY
Token Qty.

Price per CY (Figures)

Price per Cubic Yard (Written)

Total Amt. Bid (Figures)

21. Temporary Restoration

a. Furnish & Place Sidewalk Pavement - 2" Bituminous

500 SY
Est. Qty.

Price per SY (Figures)

Price per Square Yard (Written)

Total Amt. Bid (Figures)

b. Furnish & Place Street Pavement - 2" Bituminous (Intersections)

ITEM NOT APPLICABLE TO THIS CONTRACT

c. Furnish & Place Street Pavement - 4" Bituminous

ITEM NOT APPLICABLE TO THIS CONTRACT

d. Furnish & Place Street Pavement - 6" Bituminous

ITEM NOT APPLICABLE TO THIS CONTRACT

Part 1

22. Permanent Restoration

a. Furnish & Place Street Pavement - 4" Bituminous 5,200 SY (Est. Qty.) _____ Price per SY (Figures)

_____ Price per Square Yard (Written) _____ Total Amt. Bid (Figures)

b. Furnish & Place Street Pavement - 6" Bituminous 300 SY (Est. Qty.) _____ Price per SY (Figures)

_____ Price per Square Yard (Written) _____ Total Amt. Bid (Figures)

c. Furnish & Place Street Pavement - 9" Bituminous 100 SY (Est. Qty.) _____ Price per SY (Figures)

_____ Price per Square Yard (Written) _____ Total Amt. Bid (Figures)

d. Furnish & Place Street Pavement - Concrete Base 1,650 SY (Est. Qty.) _____ Price per SY (Figures)

_____ Price per Square Yard (Written) _____ Total Amt. Bid (Figures)

e. Furnish & Place Street Pavement - Bituminous Binder Only 35 TN (Token Qty.) _____ Price per TN (Figures)

_____ Price per Ton (Written) _____ Total Amt. Bid (Figures)

f. Furnish & Place Sidewalk (Driveway) Pavement - 3" Bit. 60 SY (Est. Qty.) _____ Price per SY (Figures)

_____ Price per Square Yard (Written) _____ Total Amt. Bid (Figures)

g. Furnish & Place Sidewalk Pavement - 4" Concrete 300 SY (Est. Qty.) _____ Price per SY (Figures)

_____ Price per Square Yard (Written) _____ Total Amt. Bid (Figures)

h. Furnish & Place Sidewalk (Driveway) Pavement - 6" Conc. 80 SY (Est. Qty.) _____ Price per SY (Figures)

_____ Price per Square Yard (Written) _____ Total Amt. Bid (Figures)

Part 1

i. Brick / Paver Restoration

20 SY
Est. Qty.

Price per SY (Figures)

Price per Square Yard (Written)

Total Amt. Bid (Figures)

j. Cobblestone Restoration

20 SY
Token Qty.

Price per SY (Figures)

Price per Square Yard (Written)

Total Amt. Bid (Figures)

33 b. Cold Plane / Micro Mill Bituminous Pavement Restoration (2" Depth)

27,000 SY
Est. Qty.

Price per SY (Figures)

Price per Square Yard (Written)

Total Amt. Bid (Figures)

23. Select Curb Restoration

a. Furnish & Install Granite Curbing (Vertical Face)

20 LF
Token Qty.

Price per LF (Figures)

Price per Linear Foot (Written)

Total Amt. Bid (Figures)

b. Furnish & Install Precast Concrete Curbing (Vertical Face)

20 LF
Token Qty.

Price per LF (Figures)

Price per Linear Foot (Written)

Total Amt. Bid (Figures)

c. Furnish & Install Bituminous Curbing (Vertical Face)

20 LF
Token Qty.

Price per LF (Figures)

Price per Linear Foot (Written)

Total Amt. Bid (Figures)

d. Cast-in-Place Concrete Curbing

20 LF
Token Qty.

Price per LF (Figures)

Price per Linear Foot (Written)

Total Amt. Bid (Figures)

e. Reset Existing Curbing

100 LF
Est. Qty.

Price per LF (Figures)

Price per Linear Foot (Written)

Total Amt. Bid (Figures)

Part 1

TOTAL BASE BID

a. Water Main Rehabilitation Work (Bid Item Nos. 1, 2, 3, 4, 5, 6, 7, 8, 9, 10, 11, 31c, 12a, 12b, 13, 14a to 14c, 15a to 15c, 16a to 16c, 17a to 17d, 18a to 18d, 19a to 19c)

Total Bid Price (Written) | Total Amt. Bid (Figures)

b. Earth Work and Restoration (Bid Item Nos. 20a, 20b, 21a, 21b, 22a to 22j, 33b, 23a to 23e)

Total Bid Price (Written) | Total Amt. Bid (Figures)

c. Traffic Control - Flaggers

One Hundred Thirty Thousand and Zero/100 Dollars | $130,000.00

Total Bid Price (Written) | Total Amt. Bid (Figures)

d. Traffic Control - Police Details

One Hundred Thirty Thousand and Zero/100 Dollars | $130,000.00

Total Bid Price (Written) | Total Amt. Bid (Figures)

TOTAL BASE BID (PART 1): Overall Contract Area
(Sum of a, b, c, and d above.)

Total Bid Amount (Written)

Total Bid Amount (Figures)

Part 2

UNIT RATES for Service Abandonments

24. Remove Lead Service ONLY (Not To Be Replaced - Abandoned Services)

a. Remove & Dispose of Lead Service Pipe (if required)

Price per Linear Foot (Written) _____ Price per LF (Figures) _____

b. Close Old Corporation & Cut and Crimp Old Lead Service Pipe

Price per Each (Written) _____ Price per EA (Figures) _____

c. Remove & Dispose of Old Curb Stop & Service Box

Price per Each (Written) _____ Price per EA (Figures) _____

25. Cast Iron Abandonments NOT SPECIFIED ON DESIGN PLANS

a. Remove & Dispose Abandoned 4" Services
(Includes Removal of Existing Fittings, Piping, and Appurtenances & New Pipe & Couplings for Tie-in)

Price per Each (Written) _____ Price per EA (Figures) _____

b. Remove & Dispose Abandoned 6" Services
(Includes Removal of Existing Fittings, Piping, and Appurtenances & New Pipe & Couplings for Tie-in)

Price per Each (Written) _____ Price per EA (Figures) _____

c. Remove & Dispose Abandoned 8" Services
(Includes Removal of Existing Fittings, Piping, and Appurtenances & New Pipe & Couplings for Tie-in)

Price per Each (Written) _____ Price per EA (Figures) _____

Part 3

UNIT RATES for Replacement of Lead Services and Appurtenances within Private Property ONLY

26. Install New Water Service within Private Property

a. Furnish and Install 1" Private Side Services
From Curb Stop to inside Water Meter location (Includes removal & disposal of lead service pipe, associated interior pipework, fittings, and appurtenances)

_____ _____
Price per Each (Written) Price per EA (Figures)

b. Furnish and Install 2" Private Side Services
From Curb Stop to inside Water Meter location (Includes removal & disposal of lead service pipe, associated interior pipework, fittings, and appurtenances)

_____ _____
Price per Each (Written) Price per EA (Figures)

Part 3

27. Reduced Pressure Zone (RPZ) Backflow Preventers - Commercial Customers

a. Furnish, Install, and Test 3/4" RPZ Backflow Preventer

Price per Each (Written) _____ Price per EA (Figures) _____

b. Furnish, Install, and Test 1" RPZ Backflow Preventer

Price per Each (Written) _____ Price per EA (Figures) _____

c. Furnish, Install, and Test 1-1/2" RPZ Backflow Preventer

Price per Each (Written) _____ Price per EA (Figures) _____

d. Furnish, Install, and Test 2" RPZ Backflow Preventer

Price per Each (Written) _____ Price per EA (Figures) _____

Part 4

MISCELLANEOUS UNIT PRICES
for WORK not specified in Parts 1, 2, and 3

28. Existing Water Main Flow Stopping Devices (Single)

a. Furnish & Install 6" Single Line Stop Device

Price per Each (Written) _____ Price per EA (Figures) _____

b. Furnish & Install 8" Single Line Stop Device

Price per Each (Written) _____ Price per EA (Figures) _____

c. Furnish & Install 12" Single Line Stop Device

Price per Each (Written) _____ Price per EA (Figures) _____

29. Existing Water Main Flow Stopping Devices (Double)

a. Furnish & Install 6" Double Line Stop Device

Price per Each (Written) _____ Price per EA (Figures) _____

b. Furnish & Install 8" Double Line Stop Device

Price per Each (Written) _____ Price per EA (Figures) _____

c. Furnish & Install 12" Double Line Stop Device

Price per Each (Written) _____ Price per EA (Figures) _____

Part 4

30. Tapping Sleeves and Valves

a. Furnish & Install 6" x 6" Tapping Sleeve & Valve

Price per Each (Written) Price per EA (Figures)

b. Furnish & Install 8" x 8" Tapping Sleeve & Valve

Price per Each (Written) Price per EA (Figures)

c. Furnish & Install 8" x 6" Tapping Sleeve & Valve

Price per Each (Written) Price per EA (Figures)

d. Furnish & Install 12" x 6" Tapping Sleeve & Valve

Price per Each (Written) Price per EA (Figures)

e. Furnish & Install 12" x 8" Tapping Sleeve & Valve

Price per Each (Written) Price per EA (Figures)

f. Furnish & Install 12" x 12" Tapping Sleeve & Valve

Price per Each (Written) Price per EA (Figures)

31. Insertion Valves

a. Furnish & Install 6" Insertion Valve

Price per Each (Written) Price per EA (Figures)

b. Furnish & Install 8" Insertion Valve

Price per Each (Written) Price per EA (Figures)

Part 4

c. Furnish & Install 12" Insertion Valve

REFER TO PART 1

32. Butterfly Valves

a. Furnish & Install 16" Butterfly Valve

Price per Each (Written) Price per EA (Figures)

33. Provisional Items

a. Infrared Bituminous Pavement Restoration

Price per Square Yard (Written) Price per SY (Figures)

b. Cold Plane / Micro Mill Bituminous Pavement Restoration (2" Depth)

REFER TO PART 1

c. Furnish & Place Temporary Street Pavement - 2" Bituminous

Price per Square Yard (Written) Price per SY (Figures)

d. Furnish & Place Temporary Street Pavement - 4" Bituminous

Price per Square Yard (Written) Price per SY (Figures)

e. Furnish & Place Temporary Street Pavement - 6" Bituminous

Price per Square Yard (Written) Price per SY (Figures)

Part 4

f. Dry-Hole Excavation and Backfilling

Two thousand and Zero/100 Dollars	$2,000.00
Price per Each (Written)	Price per EA (Figures)

g. Exploratory Video Inspection

Fifty and Zero/100 Dollars	$50.00
Price per Linear Foot (Written)	Price per LF (Figures)

h. Trench Rock Excavation & Removal

Two-Hundred Fifty and Zero/100 Dollars	$250.00
Price per Cubic Yard (Written)	Price per CY (Figures)

Part 5

LABOR RATES
for ADDITIONAL WORK not specified in Parts 1, 2, and 3

34. Labor Rates per hour - includes insurance, fringes, and overhead

(Submission of Certified Payrolls required)

a. _____ $ _____
Classification Standard Rate per hour

$ _____
Overtime Rate per hour

b. _____ $ _____
Classification Standard Rate per hour

$ _____
Overtime Rate per hour

c. _____ $ _____
Classification Standard Rate per hour

$ _____
Overtime Rate per hour

d. _____ $ _____
Classification Standard Rate per hour

$ _____
Overtime Rate per hour

e. _____ $ _____
Classification Standard Rate per hour

$ _____
Overtime Rate per hour

f. _____ $ _____
Classification Standard Rate per hour

$ _____
Overtime Rate per hour

g. _____ $ _____
Classification Standard Rate per hour

$ _____
Overtime Rate per hour

Use additional sheets if necessary

Part 5

EQUIPMENT RATES

for ADDITIONAL WORK not specified in Parts 1, 2, and 3

35. Equipment Rates

a. _____ $ _____
Type Make Year Rate per hour

b. _____ $ _____
Type Make Year Rate per hour

c. _____ $ _____
Type Make Year Rate per hour

d. _____ $ _____
Type Make Year Rate per hour

e. _____ $ _____
Type Make Year Rate per hour

f. _____ $ _____
Type Make Year Rate per hour

g. _____ $ _____
Type Make Year Rate per hour

h. _____ $ _____
Type Make Year Rate per hour

I. _____ $ _____
Type Make Year Rate per hour

j. _____ $ _____
Type Make Year Rate per hour

k. _____ $ _____
Type Make Year Rate per hour

Use additional sheets if necessary

Part 5

MATERIALS & SUBCONTRACTOR COST MARKUP
for ADDITIONAL WORK not specified in Parts 1, 2, and 3

36. Materials Cost Markup Percentage

a. Contractor's Cost plus
(Submission of Original Invoices required)

_____ _____
Percentage (Written) Percentage (Figures)

37. Subcontractor Cost Markup Percentage

a. Contractor's Cost plus
(Submission of Original Invoices required)

_____ _____
Percentage (Written) Percentage (Figures)

SECTION 00430

PROPOSED SUBCONTRACTOR AND SUPPLIER LISTING

SECTION 00430
PROPOSED SUBCONTRACTOR AND SUPPLIER LISTING

1.01 Bidder must, to the best of his knowledge at the time of the bid, completely provide all information requested herein and submit this Section with the Bid Form. Failure to do so may result in rejection of the Bid.

1.02 Bidder shall submit any additional information requested by the OWNER to demonstrate to the OWNER that the Subcontractors and Suppliers proposed by the Bidder are sufficiently qualified and capable of performing the required work in a timely and efficient manner.

1.03 The scope of work to be performed by a Subcontractor or materials or equipment to be provided by a Supplier must be clearly indicated herein.

1.04 If sufficient space is not available in this section for the Bidder to provide complete and accurate information, the Bidder may use and attach as many additional sheets as required to fully satisfy the requirements of this section and the Bidding Documents.

2.01 Will any Subcontractors be used to perform any portions of the work being bid?

_____ Yes _____ No

If "yes", list the proposed subcontractors to be used and the scope of work that they are anticipated to perform:

Subcontractor Name	Scope of Work to be Performed

SECTION 00430
PROPOSED SUBCONTRACTOR AND SUPPLIER LISTING

2.02 Provide the license number for and name of any subcontractors whose anticipated scope of work will require licensing to comply with federal, state or local laws and regulations:

Subcontractor Name	License No.
_____	_____
_____	_____
_____	_____
_____	_____
_____	_____

3.01 List proposed Suppliers of materials and/or equipment for the Work and the material(s) and/or equipment that they are anticipated to provide:

Supplier Name	Materials or Equipment Provided
_____	_____
_____	_____
_____	_____
_____	_____
_____	_____

4.01 The undersigned certifies that all information provided herein is true, complete, and accurate so as not to be misleading.

Company Name: _____

Signature: _____

Name (typed or printed): _____

Title: _____

Date: _____

SECTION 00450

CONTRACTOR QUALIFICATION STATEMENT

SECTION 00450
CONTRACTOR QUALIFICATION STATEMENT

Company Name: _____

Street Address: _____

Mailing Address: _____

City or Town: _____ State: _____ Zip Code: _____

Telephone No.: _____ Fax No.: _____

1.01 Bidder must completely and truthfully provide all information requested herein and submit this Section with the Bid Form. Failure to do so may result in rejection of the Bid.

1.02 Bidder shall submit any additional information requested by the OWNER to demonstrate the Bidder's ability and financial security to perform the work in a quality and expeditious manner.

1.03 If sufficient space is not available in this section for the Bidder to provide complete and accurate information, the Bidder may use and attach as many additional sheets as required to fully satisfy the requirements of this section and of the Bidding Documents.

2.01 General Information:

A. Type of Business (check one):

___ Corporation
___ Partnership
___ Sole Proprietorship
___ Joint Venture
___ Other (explain)

_____
_____
_____

B. State Incorporated or Registered In: _____
Date Incorporated or Registered: _____

C. Names of Officers and Titles:

Name	Title
_____	_____
_____	_____
_____	_____
_____	_____

D. Type of Business (from incorporation or registration papers):

_____

2.02 List all business types, trades and license numbers in which company is legally qualified to do business in the State of Rhode Island:

Business or Trade	License No.
_____	_____
_____	_____
_____	_____
_____	_____

3.01 General Financial:

A. Name of Surety: _____

Address: _____

_____

_____

B. Bank References:

Name of Bank: _____

Address: _____

_____

_____

Name of Bank: _____

Address: _____

_____

_____

SECTION 00450
CONTRACTOR QUALIFICATION STATEMENT

3.02 The OWNER reserves the right to request, and Bidder agrees to furnish, a financial statement, audited or certified, including the latest balance sheet and income statement and any supporting documentation requested by the OWNER.

4.01 List the categories of work that the Bidder typically performs with its own forces:

_____
_____
_____
_____
_____

4.02 List five projects performed by the Bidder, at least three of which include work of a similar nature to that being bid; provide all information listed below:

1. Name of Project and Location: _____

_____

_____

Owner: _____

Name of Contact Familiar with the Work performed by the Bidder:

Name: _____

Title: _____

Company: _____

Phone No.: _____

Description of Project and Work Performed by Bidder:

_____
_____
_____
_____
_____
_____

Dollar Value: Project: $ _____ Work Performed by Bidder: $ _____

Start Date: _____ Completion Date: _____

2. Name of Project and Location: _____

_____

_____

Owner: _____

Name of Contact Familiar with the Work performed by the Bidder:

Name: _____

Title: _____

Company: _____

Phone No.: _____

Description of Project and Work Performed by Bidder:

_____
_____
_____
_____
_____
_____

Dollar Value: Project: $ _____Work Performed by Bidder: $ _____

Start Date: _____ Completion Date: _____

SECTION 00450
CONTRACTOR QUALIFICATION STATEMENT

3. Name of Project and Location: _____

_____

_____

Owner: _____

Name of Contact Familiar with the Work performed by the Bidder:

Name: _____

Title: _____

Company: _____

Phone No.: _____

Description of Project and Work Performed by Bidder:

_____
_____
_____
_____
_____
_____

Dollar Value: Project: $_____Work Performed by Bidder: $_____

Start Date: _____ Completion Date: _____

SECTION 00450
CONTRACTOR QUALIFICATION STATEMENT

4. Name of Project and Location: _____

_____

_____

Owner: _____

Name of Contact Familiar with the Work performed by the Bidder:

Name: _____

Title: _____

Company: _____

Phone No.: _____

Description of Project and Work Performed by Bidder:

_____
_____
_____
_____
_____
_____

Dollar Value: Project: $ _____Work Performed by Bidder: $ _____

Start Date: _____ Completion Date: _____

SECTION 00450
CONTRACTOR QUALIFICATION STATEMENT

5. Name of Project and Location: _____

_____

_____

Owner: _____

Name of Contact Familiar with the Work performed by the Bidder:

Name: _____

Title: _____

Company: _____

Phone No.: _____

Description of Project and Work Performed by Bidder:

_____
_____
_____
_____
_____
_____

Dollar Value: Project: $ _____Work Performed by Bidder: $ _____

Start Date: _____ Completion Date: _____

SECTION 00450

CONTRACTOR QUALIFICATION STATEMENT

4.03 Dollar Value of Bidder's current work backlog: $ _____

4.04 Has the Bidder ever failed to complete any work that it was awarded? _____Yes _____No

If "yes", please provide project name and explanation:

_____
_____
_____
_____
_____
_____

4.05 Does the Bidder have any unresolved claims or law suits pending as a result of work it performed? _____Yes _____ No

If "yes", please provide project name and explanation:

_____
_____
_____
_____

5.01 The undersigned certifies that all information provided herein is true, complete, and accurate so as not to be misleading.

Company Name: _____

Signature: _____

Name (typed or printed): _____

Title: _____

Date: _____

M _____ being duly sworn deposes and states that the information provided herein is true and sufficiently complete so as not to be misleading.

Scribed and sworn before me this _____day of _____, 20_ _.

_____
NOTARY PUBLIC

(SEAL)

My commission expires: _____

SECTION 00470

CITY OF PROVIDENCE
MBE/WBE
PARTICIPATION
REQUIREMENTS

SECTION 00470
CITY OF PROVIDENCE
MBE/WBE
PARTICIPATION REQUIREMENTS

ARTICLE 1 - GENERAL

1.01 The City of Providence has initiated, by Section 21-52 of its Code of Ordinances and by Executive Order No. 1992-01, a Minority & Women Business Enterprise program. This program will be carried out in accordance with the requirements of the document titled "Bidder Information and Forms" immediately following this section; this document, by inclusion and reference, shall be considered to be a part of this section.

1.02 All work performed under these Contract Documents shall be required to be carried out in full compliance with the program cited in Paragraph 1.01.

ARTICLE 2 - REQUIREMENTS

2.01 All Bidders must fully comply with the requirements of this section and must submit all required forms with their bids. The Bidder shall also provide any and all additional information that may be required by applicable federal, state and local laws and regulations.

2.02 As described in Section 2.04, the indicated forms **must** be completed and **must** be included in the bid package. If this material is not included in the bid package, the bid shall be considered non-responsive and subject to rejection.

2.03 It is imperative that all Bidders/Contractors be fully aware of all MBE/WBE guidelines and regulations prior to bidding the work. Failure to fully comply during the bidding shall result in not awarding the Bid, and the delay or refusal of payment for work performed during construction. It is each Bidder's/Contractor's responsibility to fully comply with all MBE/WBE requirements.

2.04 **Failure of a Bidder to fully comply with the requirements of this section and to submit all required documentation with its bid shall result in the bid being considered nonresponsive and rejected. If after a good faith effort the Bidder is unable to meet the stated participation goals, the Bidder must submit the appropriate forms requesting a waiver as provided in the document "Bidder Information and Forms".**

2.05 All information requested on the forms in this section must be provided truthfully to the best of the Bidder's knowledge.

ARTICLE 3 - SUBMITTALS AND REPORTING

3.01 Bidders must comply with all submittal requirements of Article 2 and this section.

3.02 During the execution of the Work, the Contractor shall be required to submit quarterly utilization reports and annual summary reports, on the forms appended at the end of this Section, to demonstrate ongoing compliance with the program objectives and requirements of this section.

SECTION 00470

CITY OF PROVIDENCE
MBE/WBE
PARTICIPATION REQUIREMENTS

Providence Water / City of Providence

Minority & Women Business Enterprise Participation

MBE/WBE Form Instructions - Refer to Pages 9 & 10 in Section 00000 --- BCS Terms & Requirements for Bidding

MBE/WBE Participation Affidavit - Refer to Page 11 in Section 00000 --- BCS Terms & Requirements for Bidding

Subcontractor Disclosure Form - Refer to Page 12 in Section 00000 --- BCS Terms & Requirements for Bidding

MBE/WBE Waiver Request Form - Refer to Page 13 in Section 00000 --- BCS Terms & Requirements for Bidding

Periodic Utilization Reporting

Part I and Part II Forms

Project Utilization Summary Form(Sample and Form)

PROVIDENCE WATER SUPPLY BOARD / CITY OF PROVIDENCE
MINORITY & WOMEN BUSINESS ENTERPRISE PARTICIPATION
PERIODIC UTILIZATION REPORTING

PART I INSTRUCTIONS

1A & 1B - Complete Fiscal Year and Check Reporting Period (Quarter or Annual).
2A & 2B - Provided by Owner.
3A & 3B - Complete name & address, and name of contractor contact for questions regarding report.
4A - Complete title of project as it appears in specifications.
4B - City of Providence Minority & Women Business Enterprise Participation Goals.
5A - Enter total contract dollar amount awarded to the Contractor by the Owner.
5B - Enter total dollar amount of all procurements, awards, subcontracts, etc. made during the reporting period.
5C - Enter total dollar amount of all MBE & WBE procurements, awards, subcontracts, etc. made during the reporting period.
5D - Check only if amounts reported in 5C were zero and a dollar amount is recorded for 5B; explain negative report in 6. Comments.
6 - Additional comments or explanations; please refer to specific item number(s) if appropriate.
7A thru 7D - Name, title, signature of person preparing report and date signed.

PART I - General Information (Negative Report Required - see Instructions)

1A. FISCAL YEAR	1B. REPORTING PERIOD (Check Appropriate Block)				
	☐ 1st (July 1 - Sept. 30) (Due Oct. 10)	☐ 2nd (Oct. 1 - Dec. 31) (Due Jan. 10)	☐ 3rd (Jan. 1 - Mar. 31) (Due Apr. 10)	☐ 4th (Apr. 1 - June 30) (Due July 10)	☐ Annual Summary (Due July 15)

2A. OWNER (Name and Address)	3A. CONTRACTOR (Name and Address)
Providence Water Supply Board 552 Academy Avenue Providence, RI 02908	

2B. OWNER CONTACT	PHONE NO.	3B. CONTRACTOR CONTACT	PHONE NO.

4A. PROJECT NAME	4B. MBE/WBE PARTICIPATION GOALS
	10% MBE 10% WBE
5A. TOTAL CONTRACT AMOUNT	**5B. TOTAL AMOUNT OF PROCUREMENTS FOR PERIOD**
5C. ACTUAL MBE/WBE PROCUREMENTS FOR PERIOD	**5D. NEGATIVE REPORT (See Instructions)**
$ _____ MBE $ _____ WBE	☐

6. COMMENTS

7A. NAME OF PERSON REPORTING	7B. TITLE OF PERSON REPORTING
7C. SIGNATURE OF PERSON REPORTING	**7D. DATE**

PROVIDENCE WATER SUPPLY BOARD / CITY OF PROVIDENCE
MINORITY & WOMEN BUSINESS ENTERPRISE PARTICIPATION
PERIODIC UTILIZATION REPORTING

PART II INSTRUCTIONS

1. Provide Name and Address of MBE/WBE Firm providing services or products.
2. Check whether firm is MBE or WBE.
3. Provide dollar value of procured services, products, etc.
4. Date of contract or award to MBE/WBE Firm.
5. Provide description of services or products provided by MBE/WBE (use code listing at bottom of page as a guide).
6. Insert code for products or services provided using listing at bottom of page.
7. Provide above information for each MBE/WBE Firm from which services or products were procured during the reporting period.
8. If providing an annual summary report for the fiscal year, copies of the "Part II" page of each quarterly period report may be attached to the Part I annual summary in lieu of completing the information below.

PART II - MBE/WBE Procurements Made During Reported Period

NAME/ADDRESS OF MBE/WBE CONTRACTOR or VENDOR	BUSINESS ENTERPRISE		$ VALUE OF PROCUREMENT	DATE OF AWARD (MM/DD/YY)	DESCRIPTION OF PRODUCT OF SERVICE PROCURED	TYPE CODE (See Below)
	MBE	WBE				

TYPE OF PRODUCT OR SERVICE CODES

1 = Agriculture
2 = Mining
3 = Construction
4 = Manufacturing
5 = Transportation
6 = Wholesale Trade
7 = Retail Trade
8 = Finance, Insurance, Real Estate
9 = Services
  a = Business Services
  b = Professional Services
  c = Repair Services
  d = Personal Services
10 = Other

SUBCONTRACTOR UTILIZATION FORM

This form is provided as an example/courtesy; however the Contractor may submit the information in standard project planning documents that summarize the requested information below.

A FORMAT SIMILAR TO THIS MUST BE INCLUDED WITH REQUEST FOR FINAL PAYMENT if project is less than three months in duration. Otherwise it must be submitted quarterly or in accordance with any requirements (federal, state, etc.) associated with the funding source.

This form should NOT be included as part of any bid or proposal.

Prime Contractor's Name: _____

Contract Title: _____

Contract Number: _____

Total Original Contract Amount: $_____

Total Value of Change Orders (if applicable) $_____

Revised Total Amount of Contract (Original plus Change Orders)$ _____

Provide the following information for ***ALL*** Subcontractors, ***whether or not they are being utilized to achieve MBE/WBE goals*** on this contract. (Duplicate this page, if necessary.)

Subcontractor Name	Goods or Services Provided	$ Amount of Subcontract	$ Amount Paid to Date	Explain discrepancy between amount of subcontract and amount paid to date, from previous two columns (if applicable)

Subcontractor Utilization Example Form (Not An Official Form)

SAMPLE

MBE/WBE
PROJECT UTILIZATION SUMMARY FORM

Period: 11/1/2008 to 11/30/2008

Date Prepared: 12/10/08

Current Total Contract Value: $4,000,000

Item No.	General Contractor or Subcontractor	Activity Description	Project Goal $ Value	%	Period Expenditures: Non-M/WBE Contractor or Subcontractor $ Amount	MBE Subcontractor $ Amount	WBE Subcontractor $ Amount	* % of Period Expend.	** % of Contract Value	Total Expenditure to date $ Amount	**%	Business Location Local (HQ)	State of Cert.
1	XYZ Corporation	General Contractor	$2,990,000	74.8%	$220,000	$0	$0	61.1%	5.5%	$350,000	8.8%	Smithfield, RI	RI
2	Smith Construction	Public LSRs, Permanent Paving	$210,000	5.3%	$30,000	$0	$0	8.3%	0.8%	$45,000	1.1%	Cranston, RI	RI
3	Doe Enterprises	Private LSRs	$150,000	3.8%	$0	$20,000	$0	5.6%	0.5%	$30,000	0.8%	Providence, RI	RI
4	Acme Paving	Roadway/Sidewalk Paving	$250,000	6.3%	$0	$40,000	$0	11.1%	1.0%	$60,000	1.5%	Providence, RI	RI
5	Jones Equipment	Trucking/Hauling	$100,000	2.5%	$0	$0	$15,000	4.2%	0.4%	$25,000	0.6%	Warwick, RI	RI
6	Brothers Barricades	Flaggers, Traffic Control	$100,000	2.5%	$0	$0	$20,000	5.6%	0.5%	$35,000	0.9%	Smithfield, RI	RI
7	Zenith Industries	Asphalt Supplier	$200,000	5.0%	$0	$0	$15,000	4.2%	0.4%	$30,000	0.8%	Lincoln, RI	RI
8			$0	0.0%	$0	$0	$0	0.0%	0.0%	$0	0.0%		
	TOTALS		$4,000,000	100.0%	$250,000 69%	$60,000 17%	$50,000 14%	100%	9.0%	$575,000	14.4%		
							Period Expenditure Total: $360,000 100%						

Contract Value Distribution Goal:

Total Contract Value:	$4,000,000	100%
General Contractor:	$2,990,000	75%
Sub (non-M/WBE):	$210,000	5%
Sub MBE:	$400,000	10%
Sub WBE:	$400,000	10%
Total MBE/WBE:	$800,000	20%

Expenditures to Date:	Amount	** %
Total Expenditure to Date:	$575,000	14.4%
General Contractor:	$350,000	8.8%
Non-MBE/WBE Subs:	$45,000	1.1%
MBE Subcontractors:	$90,000	2.3%
WBE Subcontractors:	$90,000	2.3%
Total MBE/WBE Subs:	$180,000	4.5%

Note: Individuals of Portuguese Origin are not Classified as Minorities by City of Providence.

*** % of Period Expenditure Total**

**** % of Current Total Contract Value**

MBE/WBE
PROJECT UTILIZATION SUMMARY FORM

Period: **to** **Date Prepared:**

Current Total Contract Value:

Item No.	General Contractor or Subcontractor	Activity Description	Project Goal $ Value %	Period Expenditures: Non-M/WBE Contractor or Subcontractor $ Amount	Period Expenditures: MBE Subcontractor $ Amount	Period Expenditures: WBE Subcontractor $ Amount	* % of Period Epend.	** % of Contract Value	Total Expenditure to date $ Amount **%	Business Location Local (HQ)	State of Cert.
1											
2											
3											
4											
5											
6											
7											
8											
	TOTALS										
				Period Expenditure Total:							

Contract Value Distribution Goal:

Total Contract Value: 100%
General Contractor:
Sub (non-M/WBE):
Sub MBE:
Sub WBE:
Total MBE/WBE:

Expenditures to Date: **Amount** **** %**

Total Expenditure to Date:
General Contractor:
Non-MBE/WBE Subs:
MBE Subcontractors:
WBE Subcontractors:
Total MBE/WBE Subs:

Note: Individuals of Portuguese Origin are not Classified as Minorities by City of Providence.

*** % of Period Expenditure Total**
**** % of Current Total Contract Value**

SECTION 00480

EPA
DISADVANTAGED ENTERPRISE (DBE)
PROGRAM

EPA DBE SUBCONTRACTOR FORMS

EPA Form 6100-2
EPA Form 6100-3
EPA Form 6100-4

UNITED STATES ENVIRONMENTAL PROTECTION AGENCY
WASHINGTON, D.C. 20460

AUG 27 2015

OFFICE OF
SMALL BUSINESS
PROGRAMS

MEMORANDUM

SUBJECT: Guidance Regarding Use of Expiring Forms Associated with Disadvantaged Business Enterprise Participation in Financial Assistance Agreements

FROM: Kimberly Y. Patrick, Director
Office of Small Business Programs

Teree Henderson, DBE Program National Coordinator
Office of Small Business Programs

TO: EPA Financial Assistance Agreement Recipients, Prime Contractors and DBE Subcontractors

The Information Collection Request (ICR) for the Disadvantaged Business Enterprise (DBE) program contract administration forms listed below is currently under review by the Office of Management and Budget (OMB). While under review, EPA financial assistance agreement recipients, prime contractors and DBE subcontractors are required to continue use of the forms, pursuant to 40 CFR 33, irrespective of the August 31, 2015 expiration date. Once OMB has approved the ICR, EPA will update the forms to reflect the new expiration date and disseminate the forms as necessary. Should you have any questions, please contact Teree Henderson at henderson.teree@epa.gov or at 202-566-2222.

CERTIFICATION:

- EPA Form 6100–1a, Sole Proprietorship;
- EPA Form 6100–1b, Limited Liability Company;
- EPA 6100–1c, Partnerships;
- EPA Form 6100–1d, Corporations;
- EPA Form 6100–1e, Alaska Native Corporations;
- EPA Form 6100–1f, Tribally Owned Businesses;
- EPA Form 6100–1g, Private and Voluntary Organizations;
- EPA Form 6100–1h, Concerns Owned by Native Hawaiian Organizations; and
- EPA Form 6100–1i, Concerns Owned by Community Development Corporations.

CONTRACT ADMINISTRATION:

- EPA Form 6100-2, DBE Subcontractor Participation Form;
- EPA Form 6100-3, DBE Subcontractor Performance Form; and
- EPA Form 6100-4, DBE Subcontractor Utilization Form.

cc: Regional Small Business Coordinators
Office of Grants and Debarment

United States Environmental Protection Agency

OMB Control No: 2090-0030
Approved: 8/13/2013
Approval Expires: 8/31/2015

Disadvantaged Business Enterprise (DBE) Program
DBE Subcontractor Participation Form

An EPA Financial Assistance Agreement Recipient must require its prime contractors to provide this form to its DBE subcontractors. This form gives a DBE[1] subcontractor[2] the opportunity to describe work received and/or report any concerns regarding the EPA-funded project (e.g., in areas such as termination by prime contractor, late payments, etc.). The DBE subcontractor can, as an option, complete and submit this form to the EPA DBE Coordinator at any time during the project period of performance.

Subcontractor Name	Project Name	
Bid/ Proposal No.	Assistance Agreement ID No. (if known)	Point of Contact
Address		
Telephone No.	Email Address	
Prime Contractor Name	Issuing/Funding Entity:	

Contract Item Number	Description of Work Received from the Prime Contractor Involving Construction, Services , Equipment or Supplies	Amount Received by Prime Contractor

[1] A DBE is a Disadvantaged, Minority, or Woman Business Enterprise that has been certified by an entity from which EPA accepts certifications as described in 40 CFR 33.204-33.205 or certified by EPA. EPA accepts certifications from entities that meet or exceed EPA certification standards as described in 40 CFR 33.202.

[2] Subcontractor is defined as a company, firm, joint venture, or individual who enters into an agreement with a contractor to provide services pursuant to an EPA award of financial assistance.

United States Environmental Protection Agency

OMB Control No: 2090-0030
Approved: 8/13/2013
Approval Expires: 8/31/2015

Disadvantaged Business Enterprise (DBE) Program
DBE Subcontractor Participation Form

Please use the space below to report any concerns regarding the above EPA-funded project:

_____
_____
_____
_____
_____
_____
_____
_____
_____
_____
_____
_____
_____

Subcontractor Signature	Print Name
Title	**Date**

The public reporting and recordkeeping burden for this collection of information is estimated to average three (3) hours per response. Send comments on the Agency's need for this information, the accuracy of the provided burden estimates, and any suggested methods for minimizing respondent burden, including through the use of automated collection techniques to the Director, Collection Strategies Division, U.S. Environmental Protection Agency (2822T), 1200 Pennsylvania Ave., NW, Washington, D.C. 20460. Include the OMB control number in any correspondence. Do not send the completed form to this address.

United States Environmental Protection Agency

OMB Control No: 2090-0030
Approved: 8/13/2013
Approval Expires: 8/31/2015

Disadvantaged Business Enterprise (DBE) Program
DBE Subcontractor Performance Form

This form is intended to capture the DBE[1] subcontractor's[2] description of work to be performed and the price of the work submitted to the prime contractor. An EPA Financial Assistance Agreement Recipient must require its prime contractor to have its DBE subcontractors complete this form and include all completed forms in the prime contractors bid or proposal package.

Subcontractor Name	Project Name	
Bid/ Proposal No.	Assistance Agreement ID No. (if known)	Point of Contact
Address		
Telephone No.	Email Address	
Prime Contractor Name	Issuing/Funding Entity:	

Contract Item Number	Description of Work Submitted to the Prime Contractor Involving Construction, Services , Equipment or Supplies	Price of Work Submitted to the Prime Contractor

DBE Certified By: ___ DOT ___ SBA ___ Other: _____	Meets/ exceeds EPA certification standards? ___ YES ___ NO ___ Unknown

[1] A DBE is a Disadvantaged, Minority, or Woman Business Enterprise that has been certified by an entity from which EPA accepts certifications as described in 40 CFR 33.204-33.205 or certified by EPA. EPA accepts certifications from entities that meet or exceed EPA certification standards as described in 40 CFR 33.202.

[2] Subcontractor is defined as a company, firm, joint venture, or individual who enters into an agreement with a contractor to provide services pursuant to an EPA award of financial assistance.

OMB Control No: 2090-0030
Approved: 8/13/2013
Approval Expires: 8/31/2015

Disadvantaged Business Enterprise (DBE) Program
DBE Subcontractor Performance Form

I certify under penalty of perjury that the forgoing statements are true and correct. Signing this form does not signify a commitment to utilize the subcontractors above. I am aware of that in the event of a replacement of a subcontractor, I will adhere to the replacement requirements set forth in 40 CFR Part 33 Section 33.302 (c).

Prime Contractor Signature	Print Name
Title	**Date**

Subcontractor Signature	Print Name
Title	**Date**

The public reporting and recordkeeping burden for this collection of information is estimated to average three (3) hours per response. Send comments on the Agency's need for this information, the accuracy of the provided burden estimates, and any suggested methods for minimizing respondent burden, including through the use of automated collection techniques to the Director, Collection Strategies Division, U.S. Environmental Protection Agency (2822T), 1200 Pennsylvania Ave., NW, Washington, D.C. 20460. Include the OMB control number in any correspondence. Do not send the completed form to this address.

United States Environmental Protection Agency

OMB Control No: 2090-0030
Approved: 8/13/2013
Approval Expires: 8/31/2015

Disadvantaged Business Enterprise (DBE) Program
DBE Subcontractor Utilization Form

This form is intended to capture the prime contractor's actual and/or anticipated use of identified certified DBE[1] subcontractors[2] and the estimated dollar amount of each subcontract. An EPA Financial Assistance Agreement Recipient must require its prime contractors to complete this form and include it in the bid or proposal package. Prime contractors should also maintain a copy of this form on file.

Prime Contractor Name		Project Name
Bid/ Proposal No.	Assistance Agreement ID No. (if known)	Point of Contact
Address		
Telephone No.		Email Address
Issuing/Funding Entity:		

I have identified potential DBE certified subcontractors	___ YES	___ NO
If yes, please complete the table below. If no, please explain:		

Subcontractor Name/ Company Name	**Company Address/ Phone/ Email**	**Est. Dollar Amt**	**Currently DBE Certified?**

Continue on back if needed

[1] A DBE is a Disadvantaged, Minority, or Woman Business Enterprise that has been certified by an entity from which EPA accepts certifications as described in 40 CFR 33.204-33.205 or certified by EPA. EPA accepts certifications from entities that meet or exceed EPA certification standards as described in 40 CFR 33.202.

[2] Subcontractor is defined as a company, firm, joint venture, or individual who enters into an agreement with a contractor to provide services pursuant to an EPA award of financial assistance.

OMB Control No: 2090-0030
Approved: 8/13/2013
Approval Expires: 8/31/2015

Disadvantaged Business Enterprise (DBE) Program
DBE Subcontractor Utilization Form

I certify under penalty of perjury that the forgoing statements are true and correct. Signing this form does not signify a commitment to utilize the subcontractors above. I am aware of that in the event of a replacement of a subcontractor, I will adhere to the replacement requirements set forth in 40 CFR Part 33 Section 33.302 (c).

Prime Contractor Signature	Print Name
Title	**Date**

The public reporting and recordkeeping burden for this collection of information is estimated to average three (3) hours per response. Send comments on the Agency's need for this information, the accuracy of the provided burden estimates, and any suggested methods for minimizing respondent burden, including through the use of automated collection techniques to the Director, Collection Strategies Division, U.S. Environmental Protection Agency (2822T), 1200 Pennsylvania Ave., NW, Washington, D.C. 20460. Include the OMB control number in any correspondence. Do not send the completed form to this address.

SECTION 00490

APPRENTICE UTILIZATION, LOCAL HIRING REQUIREMENTS, & AIR QUALITY PROTOCOLS

SECTION 00490

APPRENTICE UTILIZATION, LOCAL HIRING REQUIREMENTS, & AIR QUALITY PROTOCOLS

ARTICLE 1 - GENERAL

A. The City of Providence has initiated, by Sections 21-28.1 and Section 2-169.1 of its Code of Ordinances, Apprentice Utilization / Local Hiring (First Source) requirements, and Air Quality Protocols.

B. OSHA - 29 CFR 1926.1153, "Respirable Crystalline Silica Standard for Construction", City of Providence Code of Ordinance Section 21-28.1, "Qualifications for Parties Doing Business with the City" and Section 2-169.1, "Local Hiring (First Source)" by inclusion and reference, shall be considered to be a part of this section.

ARTICLE 2 - APPRENTICE UTILIZATION

A. Any and all bidders shall certify in writing, as a condition precedent for bidding on any City of Providence-sponsored project worth in excess of one hundred thousand dollars ($100,000.00), that the bidder shall comply with the following.

B. All CONTRACTORS and SUBCONTRACTORS shall be affiliated with a state registered apprenticeship program as defined in 29 C.F.R. § 29 et seq.

C. <u>No less than fifteen percent (15%) of the total labor hours</u> performed by contractors and subcontractors on any one (1) project shall be completed by apprentices registered in state registered apprenticeship programs. This requirement pertains to <u>all</u> labor hours for a given project, not just those of new hires.

D. Subsequent to the City's award of the contract and prior to commencement of work, the prime contractor may petition to adjust the apprenticeship work hour requirements in Article 2.2. The awarding agency may lower the fifteen (15) requirement only if it determines in writing that compliance is not feasible or that it would be unduly cost prohibitive to the project.

E. All contractors and subcontractors shall submit written reports documenting compliance with their apprenticeship obligations prior to approval and issuance of any periodic and/or final payments being made by Providence Water, the contracting party.

F. The following sanctions may be imposed on any contractor or subcontractor found not to be in compliance with its obligations under the Apprentice Utilization (AU) requirement. Such sanctions shall include, but not be limited to:
   1. Termination of contract.
   2. Debarment from future city projects.
   3. Recovery of any benefits which accrued to the business during the period of violation.
   4. Referral for civil sanctions and/or prosecution under the False Claims Act.

ARTICLE 3 – LOCAL HIRING (FIRST SOURCE PROVIDENCE)

A. Jobs covered by this section and requiring adherence to the provisions of a first source agreement shall include all non-supervisory positions created as a result of internal promotions, terminations, and expansion of the employers workforce, except those filled by internal promotion from within the employers local workforce.

B. The CONTRACTOR and all SUBCONTRACTORS shall agree to recruit and hire all covered employees from the first source list provided by First Source Providence. At least ten (10) days before hiring the CONTRACTOR/SUBCONTRACTOR shall notify First Source Providence who shall refer appropriately trained and qualified employees to said CONTRACTOR / SUBCONTRACTOR until the CONTRACTOR / SUBCONTRACTOR has filled such jobs.

C. In the event that the CONTRACTOR / SUBCONTRACTOR is unable to find acceptable employees after exhausting the entire first source list, the CONTRACTOR / SUBCONTRACTOR shall notify First Source Providence that it wishes to seek outside employees. If after conference the CONTRACTOR / SUBCONTRACTOR and First Source Providence agree that the first source list is unable to provide suitable employees for said positions the CONTRACTOR / SUBCONTRACTOR shall be free to seek employees from other sources.

D. If the CONTRACTOR / SUBCONTRACTOR and First Source Providence do not agree that First Source Providence is able to find suitable employees First Source Providence shall be given an additional thirty (30) days to recruit employees for said positions. If at the end of thirty (30) days First Source Providence is unable to provide suitable employees the CONTRACTOR / SUBCONTRACTOR shall be free to hire from other sources.

E. CONTRACTOR and SUBCONTRACTOR shall notify First Source Providence as the "First Source" of referral. If the awarded contractors, regardless of tier, are signatory to Collective Bargaining Agreements which govern the contractors' hiring and referral process, they shall contact <u>both</u> First Source Providence and the local hiring halls to request <u>Providence</u> resident Apprentices or Journey workers.

F. Should the CONTRACTOR or SUBCONTRACTOR have difficulty securing registered apprentices who reside in Providence, or in general, please contact First Source Providence. If there are concerns that the project will not allow the CONTRACTOR or SUBCONTRACTOR to achieve the 15% AU requirement, contact Building Futures <u>before commencing work</u>.

G. For questions regarding monthly reporting requirements and compliance with Apprentice Utilization or Local Hiring (First Source), contact Natalie Lopes, Director of First Source Providence at 401-680-8416 or via email at nlopes@providenceri.com.

ARTICLE 4 – AIR QUALITY PROTOCOLS

A. Any and all bidders shall certify in writing, as a condition precedent for bidding on any City of Providence-sponsored project worth in excess of fifty thousand dollars ($50,000.00), that the bidder shall comply with the following.

B. All bidders shall adhere to air quality protocols outlined in the "Green During Construction" initiative. These refer specifically to:
   1. The implementation of dust controls - especially silica control measures as defined in **OSHA Standard 29 CFR 1926.1153** - during construction;
   2. The substitution of all gasoline, propane, and diesel-powered construction equipment - either stationary and mobile - with equipment designed to reduce toxic emissions, either through engine modification, the use of alternative fuels, or the implementation of electric or hybrid power systems; and
   3. The prohibition of idling motors on gasoline and diesel vehicles as published by the Rhode Island Committee on Occupational Safety and Health.

C. All bidders who are awarded or otherwise obtain contracts with the City of Providence shall comply with all obligations set forth in paragraph B. for the entire duration of the contract. Any bidder performing work pursuant to this initiative shall be obligated to immediately notify the City of Providence regarding any material changes relating to concurrence with this initiative. Failure to notify the city of any material change shall be considered a submission of false information and the city shall have the discretion to impose any and all sanctions authorized by this section.

D. Any bidder who negligently or willfully fails or refuses to comply with any of the obligations set forth in paragraph B., above, for any period of time, shall be subject to sanctions at the discretion of the City of Providence, which may or may not include one (1) or more of the following:
   1. Cessation of work on the project until compliance is obtained;
   2. Withholding of payment due under any contract or subcontract until compliance is obtained;
   3. Permanent removal from any further work on the project;
   4. Debarment from eligibility to contract with the City of Providence;
   5. Declaration of any contract held by the bidder null and void.

E. Each bidder shall be responsible for, and shall ensure that any and all subcontractors to the bidder shall comply with all the requirements of the section, and each bidder shall certify the compliance of any and all subcontractors with the provisions of this section in the manner provided in paragraph D above.

END of SECTION

SECTION 00520

AGREEMENT FORM

SECTION 00520
AGREEMENT FORM

INTRODUCTION

1.01 The following Agreement document is provided as a sample of the agreement form that the successful Bidder will be required to execute with Providence Water (the OWNER).

2.01 The City of Providence and Providence Water reserve the right to take modifications to the Agreement consistent with the Contract Documents at their discretion. The final language of the agreement document that will be executed may differ from that shown in this section.

3.01 Bids shall comply with all terms and conditions contained herein.

4.1 Depending upon the nature and magnitude of the scope of work under these Contract Documents, the OWNER may authorize the performance of the Work with only a purchase order instead of executing the Agreement document of this Section. When only a purchase order is issued to authorize the performance of the Work in lieu of executing an Agreement document, all terms and conditions contained in the Agreement document of this Section shall remain in full force and effect.

THIS AGREEMENT

MADE and concluded this_____day of_____A. D. 20 , by and between the CITY OF PROVIDENCE, a municipal corporation created by the General Assembly of the State of Rhode Island, in the County of Providence, in said State, party of the first part; and,_____*(Contractor Name & Address)*_____ _____, party of the second part, WITNESSETH, that the said party of the second part, in consideration of the promises and agreements herein mutually entered into, both for itself and for its Successors and Assigns, promise and agree to and with the said City that it, the said party of the second part shall and will in a good and workmanlike manner, and to the satisfaction of the Chief Engineer of Providence Water, to be expressed in writing by said officer, at its own proper cost and expense, do and perform all the work, and furnish all the materials which may be required by Providence Water, to wit _____*(Project Name/Description)*_____in accordance with the Contract Documents (as hereinafter defined), hereto annexed and made a part hereof, IN AN AMOUNT NOT TO EXCEED _____ *($$)* **Dollars,** which will be received and payable as follows: _____ _____*(Payment Terms per Contract Documents)*_____.

That said party of the second part, its Successors and Assigns, shall and will hold said City harmless, saved and indemnified from and against all loss, cost, damage and expense on account of all mechanics' liens, and all other liens, arising out of the services performed under this Agreement and also on account of any and all other lawful claims and demands for work done or materials furnished by sub-consultants and suppliers to party of the second part under this Agreement. And also, that all work to be done under this Contract on the part of said party of the second part shall be fully completed and performed_____*(Contract Time)*_____.

The said party of the second part, its Successors and Assigns, acknowledge, understand and agree to perform the obligations enumerated under this Contract, subject to the provisions of Section 1006(d) of the Providence Home Rule Charter of 1980, which provides that this Contract or any purchase order for payment on this Contract shall be void and of no effect and that the City shall be under no obligation hereunder unless there is compliance with Sections 813(b)(3) and 1007(c)(2) of said Charter. Said sections require that prior to entering into this Contract or delivering any purchase order, the Board of Contract and Supply and the City Controller, respectively, shall each have ascertained that there exists a sufficient unexpended and unencumbered balance in funds appropriated and allotted for the purpose to justify the cost thereof.

The said party of the second part, its Executors, Administrators, Successors and Assigns, further acknowledge, understand and agree that all City Contracts for purchase of materials, supplies, services, equipment and property, which include a cost per unit shall also include a maximum cost for the Contract, and such maximum cost shall be used by the Board of Contract and Supply and the City Controller for compliance with Sections 813(b)(3) and 1007(c)(2) of the Providence Home Rule Charter of 1980.

And said City, party of the first part, and said party of the second part will faithfully perform said Contract in all its parts, and satisfying said City that no liens or other claims for labor done or materials furnished in the aforesaid work exist, will pay therefore the aforesaid sum, to be in full satisfaction of all claims and demands therefore, and which sum will be paid in manner aforesaid.

And it is hereby mutually understood and agreed that no payment for extra work shall or will be claimed or made unless ordered in writing by the Board of Contract and Supply of said CITY OF PROVIDENCE.

In addition to this document, the additional Contract Documents which shall constitute this Contract shall include the following:

(a) Exhibit I, Bidding Documents

(b)) Exhibit II, Original Bid

(c) Exhibit III, Terms and Conditions

(d)) Exhibit IV, Rhode Island General Law 37-13-1 thru 37-13-13

(e) Exhibit V, Certificate of Insurance

(f)) Exhibit VI, Payment and Performance Bond

Said additional documents shall be interpreted in the order of priority listed above. The most recently executed addendum shall have the greatest priority.

IN WITNESS WHEREOF, the parties hereto have signed and executed these presents, the CITY OF PROVIDENCE, by_____, the Mayor thereof, hereunto duly authorized, at said Providence, Rhode Island, on the day and year first above written.

SIGNED IN THE PRESENCE OF:

_____	_____
WITNESS TO MAYOR	CITY OF PROVIDENCE MAYOR AND CHAIRMAN
_____	_____
	Contractor Signature
	_____
	Company Name
Approved as to form and correctness	_____
	PW Legal Counsel
Approved as to form and correctness	_____
	City Solicitor

(TO BE INCLUDED AS AN ATTACHMENT TO THE AGREEMENT)

Exhibit III

CITY OF PROVIDENCE
CONTRACT TERMS & CONDITIONS

1. Termination of Contract for Cause. If through and cause, the Contractor shall fail to uphold any of the covenants, agreements, or stipulations of this Contract, the City of Providence shall thereupon have the right to terminate this Contract by giving written notice to the Contractor and specifying the effective date thereof, at least seven (7) days before the effective date of such termination. In such event, all finished or unfinished documents, data, studies, and reports prepared by the Contractor under this Contract, shall, at the option of the City of Providence, become City property and the Contractor shall be entitled to receive just and equitable compensation for any satisfactory work completed on such documents.

Notwithstanding the above, the Contractor shall not be relieved of liability to the City of Providence for damages sustained by the City of Providence by virtue of any breach of the Contract by the Contractor and the City of Providence may withhold any payments to the Contractor for the purpose of set off until such time as the exact amount of damages due the City of Providence from the Contractor is determined.

2. Termination for convenience of the City of Providence. The City of Providence may terminate this Contract any time by a notice in writing from the City of Providence to the Contractor. If the Contract is terminated by the City of Providence as provided herein, the Contractor will be paid an amount which bears the same ratio to the total compensation as the services actually performed. If this Contract is terminated due to the fault of the Contractor, Article 1 hereof relative to termination shall apply.

3. Changes. The City of Providence, may from time to time, request changes in the scope of the services of the Contractor to be performed hereupon. Such changes, including any increase or decrease in the amount of the Contract compensation, which are mutually agreed upon by and between the City of Providence and the Contractor shall be incorporated in written amendments to this Contract.

4. Personnel.

   a. The Contractor represents that it has, or will secure at its own expense, all personnel required in performing the services under this Contract. Such personnel shall not be employees of or have contractual relationship with the City of Providence.

b. All the services required hereunder will be performed by the Contractor or under its supervision and all personnel engaged in the work shall be fully qualified and shall be authorized or permitted under State and local law to perform such services.

c. No person who is serving sentences in a penal or Correctional institution shall be employed on work under this Contract.

5. Anti-Kickback Rules. Salaries of personnel performing work under this Contract shall except only such payroll deductions as are mandatory by law or permitted by the applicable regulation issued by the Secretary of Labor pursuant to the Copeland Act (or "Anti-Kickback Act of June 13, 1934 48 Stat. 948:62 Stat. 740:63 Stat. 108: Title 18 U.S.C. Section 874: and Title 40 U.S.C. Section 276(c). The Contractor shall comply with all applicable "Anti-Kickback" regulations and shall insert appropriate provisions in all subcontracts with such regulations, and shall be responsible for the submission of affidavits required of subcontractors thereunder except as the Secretary of Labor may specifically provide for variations of or exemptions from the requirements thereof.

6. Claims and Disputes Pertaining to Salary Rates. Claims and disputes pertaining to salary rates or to classifications of personnel performing work under this Contract shall be promptly reported in writing by the Contractor to the City of Providence for the latter's decision which shall be final with respect thereto.

7. Equal Employment Opportunity. During the performance of the Contract, the Contractor agrees as follows:

a. The Contractor will not discriminate against any employee or applicant for employment because of race, color, religion, sex, country of national origin, age, ancestry or handicap. The Contractor will take affirmative action to ensure that applicants are employed, and that employees are treated during employment, without regard to race, religion, sex, country of national origin, age, ancestry or handicap. Such action will include, but not limited to the following: upgrading, demotion, or transfer, recruitment, or recruitment advertising, layoff or termination rates of pay or other forms of compensation, and selection for training, including apprenticeship. The Contractor agrees to post in conspicuous places, available to employees and applicants for employment, notices setting forth provisions of this nondiscrimination clause.

b. The Contractor will, in all solicitation or advertisements for employees placed by or on behalf of the Contractor state that all qualified applicants will receive consideration for employment without regard to race, color, religion, sex country of national origin, age, ancestry or handicap.

c. The Contractor will cause the foregoing provisions to be inserted in all subcontracts for any work covered by this Contract so that such provisions will be binding upon each subcontractor, provided that the foregoing provisions shall not apply to contracts or subcontracts for standard commercial supplies or raw materials.

8. Compliance with Local Laws. The Contractor shall comply with all laws, ordinances, and codes of the state and local governments, and shall commit no trespass on any public or private property in performing any of the work embraced by this contract.

9. Subcontracting. None of the services covered by this Contract shall be subcontracted without the prior written consent of the City of Providence. The Contractor shall be as fully responsible to the City of Providence for the acts and omissions of its/his subcontractors and of persons either directly employed by it/him. The Contractor shall insert in each subcontract appropriate provisions requiring compliance with the labor standards provisions of the Contract.

10. Assignability. The Contractor shall not assign any interest in this Contract, and shall not transfer any interest in the same (whether by or novation) without the prior written approval of the City of Providence; provided, however, that claims for money due or to become due the Contractor from the City of Providence, under this contract may be assigned to a bank, trust company, or other financial institution, or to a Trustee in Bankruptcy, without such approval.

11. Interest of Members of the City of Providence. No member of this governing body of the City of Providence and no other officer, employee, or agent of the City of Providence who exercises any functions or responsibilities in connection with the carrying out of the project to which this Contract pertains, shall have any personal interest, direct or indirect, in the Contract.

12. Findings Confidential. All of the reports, information, data, etc., prepared or assembled by the Contractor under this Contract are confidential and the Contractor agrees that they shall not be made available to any individual or organization without the prior written approval of the City of Providence.

13. Non-Expendable Property. At the conclusion of this Contract, all non-expendable property purchased with Contract funds shall revert to the City of Providence.

14. Records.

a. Establishment and Maintenance of Records. Records shall be maintained by the Contractor for a period of five years after the receipt of final payment under this contract.

1. Documentation of Costs. All costs shall be supported by properly executed payrolls, time records, invoices, contracts, or vouchers, or other documentation evidencing in proper detail the nature of and propriety of the charges. All checks, payrolls, invoices, contracts, vouchers, orders or other accounting documents pertaining in whole or in part to this Contract shall be clearly identified and readily accessible.

15. Audits and Inspections. At any time during normal business hours and as often as the City of Providence may deem necessary, there shall be made available by the Contractor to the City of Providence for examination all of its records with respect to all matters covered by this Contract. The Contractor will permit the City of Providence to audit, examine, and make excerpts of transcripts from such records, and to make audits of all contracts, invoices, materials, payrolls, records of personnel, conditions of employment, and other data or information relating to all matters covered by this Contract.

16. Political Activity Prohibited. None of the funds, materials, property or services provided directly or indirectly under this Contract shall be used for any partisan political activity, or to further the election or defeat of any candidate for public office, and shall be used solely for the performance of this Contract.

17. he Contractor shall, prior to commencing performance under the Contract, attach a Certificate of Insurance in a form and amount acceptable to the City of Providence, covering the damages which arise from the negligence of the Contractor in performance under the Contract, including all claims for personal injury or damages to property sustained by third persons, or their agents, servants and/or those claimed under them.

END OF EXHIBIT III

SECTION 00700

STANDARD GENERAL CONDITIONS OF THE CONSTRUCTION CONTRACT

Prepared By: Engineers Joint Contract Documents Committee

STANDARD
GENERAL CONDITIONS
OF THE
CONSTRUCTION CONTRACT

Prepared by

ENGINEERS JOINT CONTRACT DOCUMENTS COMMITTEE

and

Issued and Published Jointly By

AMERICAN CONSULTING ENGINEERS COUNCIL

National Society of Professional Engineers
Professional Engineers in Private Practice

AMERICAN SOCIETY OF CIVIL ENGINEERS

PROFESSIONAL ENGINEERS IN PRIVATE PRACTICE
a practice division of the
NATIONAL SOCIETY OF PROFESSIONAL ENGINEERS

AMERICAN CONSULTING ENGINEERS COUNCIL

AMERICAN SOCIETY OF CIVIL ENGINEERS

This document has been approved and endorsed by

The Associated General Contractors of America

Construction Specifications Institute

Advancement of Construction Technology

EJCDC No. 1910-8 (1996 Edition)

Copyright ©1996

National Society of Professional Engineers
1420 King Street, Alexandria, VA 22314

American Consulting Engineers Council
1015 15th Street N.W., Washington, DC 20005

American Society of Civil Engineers
345 East 47th Street, New York, NY 10017

TABLE OF CONTENTS

Page

ARTICLE 1 - DEFINITIONS AND TERMINOLOGY 6
1.01 *Defined Terms* 6
1.02 *Terminology* 8

ARTICLE 2 - PRELIMINARY MATTERS 9
2.01 *Delivery of Bonds* 9
2.02 *Copies of Documents* 9
2.03 *Commencement of Contract Times; Notice to Proceed* 9
2.04 *Starting the Work* 9
2.05 *Before Starting Construction* 9
2.06 *Preconstruction Conference* 10
2.07 *Initial Acceptance of Schedules* 10

ARTICLE 3 - CONTRACT DOCUMENTS: INTENT, AMENDING, REUSE 10
3.01 *Intent* 10
3.02 *Reference Standards* 10
3.03 *Reporting and Resolving Discrepancies* 11
3.04 *Amending and Supplementing Contract Documents* 11
3.05 *Reuse of Documents* 11

ARTICLE 4 - AVAILABILITY OF LANDS; SUBSURFACE AND PHYSICAL CONDITIONS; REFERENCE POINTS 11
4.01 *Availability of Lands* 11
4.02 *Subsurface and Physical Conditions* 12
4.03 *Differing Subsurface or Physical Conditions* 12
4.04 *Underground Facilities* 13
4.05 *Reference Points* 14
4.06 *Hazardous Environmental Condition at Site* 14

ARTICLE 5 - BONDS AND INSURANCE 15
5.01 *Performance, Payment, and Other Bonds* 15
5.02 *Licensed Sureties and Insurers* 15
5.03 *Certificates of Insurance* 15
5.04 *CONTRACTOR's Liability Insurance* 15
5.05 *OWNER's Liability Insurance* 16
5.06 *Property Insurance* 16
5.07 *Waiver of Rights* 17
5.08 *Receipt and Application of Insurance Proceeds* 18
5.09 *Acceptance of Bonds and Insurance; Option to Replace* 18
5.10 *Partial Utilization, Acknowledgment of Property Insurer* 18

ARTICLE 6 - CONTRACTOR'S RESPONSIBILITIES 19
6.01 *Supervision and Superintendence* 19
6.02 *Labor; Working Hours* 19
6.03 *Services, Materials, and Equipment* 19
6.04 *Progress Schedule* 19
6.05 *Substitutes and "Or-Equals"* 19
6.06 *Concerning Subcontractors, Suppliers, and Others* 21
6.07 *Patent Fees and Royalties* 22
6.08 *Permits* 22

6.09 *Laws and Regulations* 22
6.10 *Taxes* 22
6.11 *Use of Site and Other Areas* 22
6.12 *Record Documents* 23
6.13 *Safety and Protection* 23
6.14 *Safety Representative* 23
6.15 *Hazard Communication Programs* 24
6.16 *Emergencies* 24
6.17 *Shop Drawings and Samples* 24
6.18 *Continuing the Work* 25
6.19 *CONTRACTOR's General Warranty and Guarantee* 25
6.20 *Indemnification* 25

ARTICLE 7 - OTHER WORK 26
7.01 *Related Work at Site* 26
7.02 *Coordination* 27

ARTICLE 8 - OWNER'S RESPONSIBILITIES 27
8.01 *Communications to Contractor* 27
8.02 *Replacement of ENGINEER* 27
8.03 *Furnish Data* 27
8.04 *Pay Promptly When Due* 27
8.05 *Lands and Easements; Reports and Tests* 27
8.06 *Insurance* 27
8.07 *Change Orders* 27
8.08 *Inspections, Tests, and Approvals* 27
8.09 *Limitations on OWNER's Responsibilities* 27
8.10 *Undisclosed Hazardous Environmental Condition* 27
8.11 *Evidence of Financial Arrangements* 27

ARTICLE 9 - ENGINEER'S STATUS DURING CONSTRUCTION 28
9.01 *OWNER'S Representative* 28
9.02 *Visits to Site* 28
9.03 *Project Representative* 28
9.04 *Clarifications and Interpretations* 28
9.05 *Authorized Variations in Work* 28
9.06 *Rejecting Defective Work* 28
9.07 *Shop Drawings, Change Orders and Payments* 28
9.08 *Determinations for Unit Price Work* 29
9.09 *Decisions on Requirements of Contract Documents and Acceptability of Work* 29
9.10 *Limitations on ENGINEER's Authority and Responsibilities* 29

ARTICLE 10 - CHANGES IN THE WORK; CLAIMS 29
10.01 *Authorized Changes in the Work* 29
10.02 *Unauthorized Changes in the Work* 30
10.03 *Execution of Change Orders* 30
10.04 *Notification to Surety* 30
10.05 *Claims and Disputes* 30

ARTICLE 11 - COST OF THE WORK; CASH ALLOWANCES; UNIT PRICE WORK 31
11.01 *Cost of the Work* 31
11.02 *Cash Allowances* 32
11.03 *Unit Price Work* 33

ARTICLE 12 - CHANGE OF CONTRACT PRICE; CHANGE OF CONTRACT TIMES 33
12.01 *Change of Contract Price* 33
12.02 *Change of Contract Times* 34
12.03 *Delays Beyond CONTRACTOR's Control* 34
12.04 *Delays Within CONTRACTOR's Control* 34
12.05 *Delays Beyond OWNER's and CONTRACTOR's Control* 34
12.06 *Delay Damages* 34

ARTICLE 13 - TESTS AND INSPECTIONS; CORRECTION, REMOVAL OR ACCEPTANCE OF DEFECTIVE WORK 35
13.01 *Notice of Defects* 35
13.02 *Access to Work* 35
13.03 *Tests and Inspections* 35
13.04 *Uncovering Work* 35
13.05 *OWNER May Stop the Work* 36
13.06 *Correction or Removal of Defective Work* 36
13.07 *Correction Period* 36
13.08 *Acceptance of Defective Work* 36
13.09 *OWNER May Correct Defective Work* 36

ARTICLE 14 - PAYMENTS TO CONTRACTOR AND COMPLETION 37
14.01 *Schedule of Values* 37
14.02 *Progress Payments* 37
14.03 *CONTRACTOR's Warranty of Title* 39
14.04 *Substantial Completion* 39
14.05 *Partial Utilization* 39
14.06 *Final Inspection* 40
14.07 *Final Payment* 40
14.08 *Final Completion Delayed* 41
14.09 *Waiver of Claims* 41

ARTICLE 15 - SUSPENSION OF WORK AND TERMINATION 41
15.01 *OWNER May Suspend Work* 41
15.02 *OWNER May Terminate for Cause* 41
15.03 *OWNER May Terminate For Convenience* 42
15.04 *CONTRACTOR May Stop Work or Terminate* 42

ARTICLE 16 - DISPUTE RESOLUTION 42
16.01 *Methods and Procedures* 42

ARTICLE 17 - MISCELLANEOUS 42
17.01 *Giving Notice* 42
17.02 *Computation of Times* 42
17.03 *Cumulative Remedies* 43
17.04 *Survival of Obligations* 43
17.05 *Controlling Law* 43

GENERAL CONDITIONS

ARTICLE 1 - DEFINITIONS AND TERMINOLOGY

1.01 *Defined Terms*

A. Wherever used in the Contract Documents and printed with initial or all capital letters, the terms listed below will have the meanings indicated which are applicable to both the singular and plural thereof.

1. *Addenda*--Written or graphic instruments issued prior to the opening of Bids which clarify, correct, or change the Bidding Requirements or the Contract Documents.

2. *Agreement*--The written instrument which is evidence of the agreement between OWNER and CONTRACTOR covering the Work.

3. *Application for Payment*--The form acceptable to ENGINEER which is to be used by CONTRACTOR during the course of the Work in requesting progress or final payments and which is to be accompanied by such supporting documentation as is required by the Contract Documents.

4. *Asbestos*--Any material that contains more than one percent asbestos and is friable or is releasing asbestos fibers into the air above current action levels established by the United States Occupational Safety and Health Administration.

5. *Bid*--The offer or proposal of a bidder submitted on the prescribed form setting forth the prices for the Work to be performed.

6. *Bidding Documents*--The Bidding Requirements and the proposed Contract Documents (including all Addenda issued prior to receipt of Bids).

7. *Bidding Requirements*--The Advertisement or Invitation to Bid, Instructions to Bidders, Bid security form, if any, and the Bid form with any supplements.

8. *Bonds*--Performance and payment bonds and other instruments of security.

9. *Change Order*--A document recommended by ENGINEER which is signed by CONTRACTOR and OWNER and authorizes an addition, deletion, or revision in the Work or an adjustment in the Contract Price or the Contract Times, issued on or after the Effective Date of the Agreement.

10. *Claim*--A demand or assertion by OWNER or CONTRACTOR seeking an adjustment of Contract Price or Contract Times, or both, or other relief with respect to the terms of the Contract. A demand for money or services by a third party is not a Claim.

11. *Contract*--The entire and integrated written agreement between the OWNER and CONTRACTOR concerning the Work. The Contract supersedes prior negotiations, representations, or agreements, whether written or oral.

12. *Contract Documents*--The Contract Documents establish the rights and obligations of the parties and include the Agreement, Addenda (which pertain to the Contract Documents), CONTRACTOR's Bid (including documentation accompanying the Bid and any post Bid documentation submitted prior to the Notice of Award) when attached as an exhibit to the Agreement, the Notice to Proceed, the Bonds, these General Conditions, the Supplementary Conditions, the Specifications and the Drawings as the same are more specifically identified in the Agreement, together with all Written Amendments, Change Orders, Work Change Directives, Field Orders, and ENGINEER's written interpretations and clarifications issued on or after the Effective Date of the Agreement. Approved Shop Drawings and the reports and drawings of subsurface and physical conditions are not Contract Documents. Only printed or hard copies of the items listed in this paragraph are Contract Documents. Files in electronic media format of text, data, graphics, and the like that may be furnished by OWNER to CONTRACTOR are not Contract Documents.

13. *Contract Price*--The moneys payable by OWNER to CONTRACTOR for completion of the Work in accordance with the Contract Documents as stated in the Agreement (subject to the provisions of paragraph 11.03 in the case of Unit Price Work).

14. *Contract Times*--The number of days or the dates stated in the Agreement to: (i) achieve Substantial Completion; and (ii) complete the Work so that it is ready for final payment as evidenced by ENGINEER's written recommendation of final payment.

15. *CONTRACTOR*--The individual or entity with whom OWNER has entered into the Agreement.

16. *Cost of the Work*--See paragraph 11.01.A for definition.

17. *Drawings*--That part of the Contract Documents prepared or approved by ENGINEER which

graphically shows the scope, extent, and character of the Work to be performed by CONTRACTOR. Shop Drawings and other CONTRACTOR submittals are not Drawings as so defined.

18. *Effective Date of the Agreement*--The date indicated in the Agreement on which it becomes effective, but if no such date is indicated, it means the date on which the Agreement is signed and delivered by the last of the two parties to sign and deliver.

19. *ENGINEER*--The individual or entity named as such in the Agreement.

20. *ENGINEER's Consultant*--An individual or entity having a contract with ENGINEER to furnish services as ENGINEER's independent professional associate or consultant with respect to the Project and who is identified as such in the Supplementary Conditions.

21. *Field Order*--A written order issued by ENGINEER which requires minor changes in the Work but which does not involve a change in the Contract Price or the Contract Times.

22. *General Requirements*--Sections of Division 1 of the Specifications. The General Requirements pertain to all sections of the Specifications.

23. *Hazardous Environmental Condition*--The presence at the Site of Asbestos, PCBs, Petroleum, Hazardous Waste, or Radioactive Material in such quantities or circumstances that may present a substantial danger to persons or property exposed thereto in connection with the Work.

24. *Hazardous Waste*--The term Hazardous Waste shall have the meaning provided in Section 1004 of the Solid Waste Disposal Act (42 USC Section 6903) as amended from time to time.

25. *Laws and Regulations; Laws or Regulations*--Any and all applicable laws, rules, regulations, ordinances, codes, and orders of any and all governmental bodies, agencies, authorities, and courts having jurisdiction.

26. *Liens*--Charges, security interests, or encumbrances upon Project funds, real property, or personal property.

27. *Milestone*--A principal event specified in the Contract Documents relating to an intermediate completion date or time prior to Substantial Completion of all the Work.

28. *Notice of Award*--The written notice by OWNER to the apparent successful bidder stating that upon timely compliance by the apparent successful bidder with the conditions precedent listed therein, OWNER will sign and deliver the Agreement.

29. *Notice to Proceed*--A written notice given by OWNER to CONTRACTOR fixing the date on which the Contract Times will commence to run and on which CONTRACTOR shall start to perform the Work under the Contract Documents.

30. *OWNER*--The individual, entity, public body, or authority with whom CONTRACTOR has entered into the Agreement and for whom the Work is to be performed.

31. *Partial Utilization*--Use by OWNER of a substantially completed part of the Work for the purpose for which it is intended (or a related purpose) prior to Substantial Completion of all the Work.

32. *PCBs*--Polychlorinated biphenyls.

33. *Petroleum*--Petroleum, including crude oil or any fraction thereof which is liquid at standard conditions of temperature and pressure (60 degrees Fahrenheit and 14.7 pounds per square inch absolute), such as oil, petroleum, fuel oil, oil sludge, oil refuse, gasoline, kerosene, and oil mixed with other non-Hazardous Waste and crude oils.

34. *Project*--The total construction of which the Work to be performed under the Contract Documents may be the whole, or a part as may be indicated elsewhere in the Contract Documents.

35. *Project Manual*--The bound documentary information prepared for bidding and constructing the Work. A listing of the contents of the Project Manual, which may be bound in one or more volumes, is contained in the table(s) of contents.

36. *Radioactive Material*--Source, special nuclear, or byproduct material as defined by the Atomic Energy Act of 1954 (42 USC Section 2011 et seq.) as amended from time to time.

37. *Resident Project Representative*--The authorized representative of ENGINEER who may be assigned to the Site or any part thereof.

38. *Samples*--Physical examples of materials, equipment, or workmanship that are representative of some portion of the Work and which establish the standards by which such portion of the Work will be judged.

39. *Shop Drawings*--All drawings, diagrams, illustrations, schedules, and other data or information which are specifically prepared or assembled by or for

CONTRACTOR and submitted by CONTRACTOR to illustrate some portion of the Work.

40. *Site*--Lands or areas indicated in the Contract Documents as being furnished by OWNER upon which the Work is to be performed, including rights-of-way and easements for access thereto, and such other lands furnished by OWNER which are designated for the use of CONTRACTOR.

41. *Specifications*--That part of the Contract Documents consisting of written technical descriptions of materials, equipment, systems, standards, and workmanship as applied to the Work and certain administrative details applicable thereto.

42. *Subcontractor*--An individual or entity having a direct contract with CONTRACTOR or with any other Subcontractor for the performance of a part of the Work at the Site.

43. *Substantial Completion*--The time at which the Work (or a specified part thereof) has progressed to the point where, in the opinion of ENGINEER, the Work (or a specified part thereof) is sufficiently complete, in accordance with the Contract Documents, so that the Work (or a specified part thereof) can be utilized for the purposes for which it is intended. The terms "substantially complete" and "substantially completed" as applied to all or part of the Work refer to Substantial Completion thereof.

44. *Supplementary Conditions*--That part of the Contract Documents which amends or supplements these General Conditions.

45. *Supplier*--A manufacturer, fabricator, supplier, distributor, materialman, or vendor having a direct contract with CONTRACTOR or with any Subcontractor to furnish materials or equipment to be incorporated in the Work by CONTRACTOR or any Subcontractor.

46. *Underground Facilities*--All underground pipelines, conduits, ducts, cables, wires, manholes, vaults, tanks, tunnels, or other such facilities or attachments, and any encasements containing such facilities, including those that convey electricity, gases, steam, liquid petroleum products, telephone or other communications, cable television, water, wastewater, storm water, other liquids or chemicals, or traffic or other control systems.

47. *Unit Price Work*--Work to be paid for on the basis of unit prices.

48. *Work*--The entire completed construction or the various separately identifiable parts thereof required to be provided under the Contract Documents. Work includes and is the result of performing or providing all labor, services, and documentation necessary to produce such construction, and furnishing, installing, and incorporating all materials and equipment into such construction, all as required by the Contract Documents.

49. *Work Change Directive*--A written statement to CONTRACTOR issued on or after the Effective Date of the Agreement and signed by OWNER and recommended by ENGINEER ordering an addition, deletion, or revision in the Work, or responding to differing or unforeseen subsurface or physical conditions under which the Work is to be performed or to emergencies. A Work Change Directive will not change the Contract Price or the Contract Times but is evidence that the parties expect that the change ordered or documented by a Work Change Directive will be incorporated in a subsequently issued Change Order following negotiations by the parties as to its effect, if any, on the Contract Price or Contract Times.

50. *Written Amendment*--A written statement modifying the Contract Documents, signed by OWNER and CONTRACTOR on or after the Effective Date of the Agreement and normally dealing with the nonengineering or nontechnical rather than strictly construction-related aspects of the Contract Documents.

1.02 *Terminology*

A. *Intent of Certain Terms or Adjectives*

1. Whenever in the Contract Documents the terms "as allowed," "as approved," or terms of like effect or import are used, or the adjectives "reasonable," "suitable," "acceptable," "proper," "satisfactory," or adjectives of like effect or import are used to describe an action or determination of ENGINEER as to the Work, it is intended that such action or determination will be solely to evaluate, in general, the completed Work for compliance with the requirements of and information in the Contract Documents and conformance with the design concept of the completed Project as a functioning whole as shown or indicated in the Contract Documents (unless there is a specific statement indicating otherwise). The use of any such term or adjective shall not be effective to assign to ENGINEER any duty or authority to supervise or direct the performance of the Work or any duty or authority to undertake responsibility contrary to the provisions of paragraph 9.10 or any other provision of the Contract Documents.

B. *Day*

1. The word "day" shall constitute a calendar day of 24 hours measured from midnight to the next midnight.

C. *Defective*

1. The word "defective," when modifying the word "Work," refers to Work that is unsatisfactory, faulty, or deficient in that it does not conform to the Contract Documents or does not meet the requirements of any inspection, reference standard, test, or approval referred to in the Contract Documents, or has been damaged prior to ENGINEER's recommendation of final payment (unless responsibility for the protection thereof has been assumed by OWNER at Substantial Completion in accordance with paragraph 14.04 or 14.05).

D. *Furnish, Install, Perform, Provide*

1. The word "furnish," when used in connection with services, materials, or equipment, shall mean to supply and deliver said services, materials, or equipment to the Site (or some other specified location) ready for use or installation and in usable or operable condition.

2. The word "install," when used in connection with services, materials, or equipment, shall mean to put into use or place in final position said services, materials, or equipment complete and ready for intended use.

3. The words "perform" or "provide," when used in connection with services, materials, or equipment, shall mean to furnish and install said services, materials, or equipment complete and ready for intended use.

4. When "furnish," "install," "perform," or "provide" is not used in connection with services, materials, or equipment in a context clearly requiring an obligation of CONTRACTOR, "provide" is implied.

E. Unless stated otherwise in the Contract Documents, words or phrases which have a well-known technical or construction industry or trade meaning are used in the Contract Documents in accordance with such recognized meaning.

ARTICLE 2 - PRELIMINARY MATTERS

2.01 *Delivery of Bonds*

A. When CONTRACTOR delivers the executed Agreements to OWNER, CONTRACTOR shall also deliver to OWNER such Bonds as CONTRACTOR may be required to furnish.

2.02 *Copies of Documents*

A. OWNER shall furnish to CONTRACTOR up to ten copies of the Contract Documents. Additional copies will be furnished upon request at the cost of reproduction.

2.03 *Commencement of Contract Times; Notice to Proceed*

A. The Contract Times will commence to run on the thirtieth day after the Effective Date of the Agreement or, if a Notice to Proceed is given, on the day indicated in the Notice to Proceed. A Notice to Proceed may be given at any time within 30 days after the Effective Date of the Agreement. In no event will the Contract Times commence to run later than the sixtieth day after the day of Bid opening or the thirtieth day after the Effective Date of the Agreement, whichever date is earlier.

2.04 *Starting the Work*

A. CONTRACTOR shall start to perform the Work on the date when the Contract Times commence to run. No Work shall be done at the Site prior to the date on which the Contract Times commence to run.

2.05 *Before Starting Construction*

A. *CONTRACTOR's Review of Contract Documents:* Before undertaking each part of the Work, CONTRACTOR shall carefully study and compare the Contract Documents and check and verify pertinent figures therein and all applicable field measurements. CONTRACTOR shall promptly report in writing to ENGINEER any conflict, error, ambiguity, or discrepancy which CONTRACTOR may discover and shall obtain a written interpretation or clarification from ENGINEER before proceeding with any Work affected thereby; however, CONTRACTOR shall not be liable to OWNER or ENGINEER for failure to report any conflict, error, ambiguity, or discrepancy in the Contract Documents unless CONTRACTOR knew or reasonably should have known thereof.

B. *Preliminary Schedules:* Within ten days after the Effective Date of the Agreement (unless otherwise specified in the General Requirements), CONTRACTOR shall submit to ENGINEER for its timely review:

1. a preliminary progress schedule indicating the times (numbers of days or dates) for starting and completing the various stages of the Work, including any Milestones specified in the Contract Documents;

2. a preliminary schedule of Shop Drawing and Sample submittals which will list each required submittal and the times for submitting, reviewing, and processing such submittal; and

3. a preliminary schedule of values for all of the Work which includes quantities and prices of items which when added together equal the Contract Price and subdivides the Work into component parts in sufficient detail to serve as the basis for progress payments during performance of the Work. Such prices will include an appropriate amount of overhead and profit applicable to each item of Work.

C. *Evidence of Insurance:* Before any Work at the Site is started, CONTRACTOR and OWNER shall each deliver to the other, with copies to each additional insured identified in the Supplementary Conditions, certificates of insurance (and other evidence of insurance which either of them or any additional insured may reasonably request) which CONTRACTOR and OWNER respectively are required to purchase and maintain in accordance with Article 5.

2.06*Preconstruction Conference*

A. Within 20 days after the Contract Times start to run, but before any Work at the Site is started, a conference attended by CONTRACTOR, ENGINEER, and others as appropriate will be held to establish a working understanding among the parties as to the Work and to discuss the schedules referred to in paragraph 2.05.B, procedures for handling Shop Drawings and other submittals, processing Applications for Payment, and maintaining required records.

2.07*Initial Acceptance of Schedules*

A. Unless otherwise provided in the Contract Documents, at least ten days before submission of the first Application for Payment a conference attended by CONTRACTOR, ENGINEER, and others as appropriate will be held to review for acceptability to ENGINEER as provided below the schedules submitted in accordance with paragraph 2.05.B. CONTRACTOR shall have an additional ten days to make corrections and adjustments and to complete and resubmit the schedules. No progress payment shall be made to CONTRACTOR until acceptable schedules are submitted to ENGINEER.

1. The progress schedule will be acceptable to ENGINEER if it provides an orderly progression of the Work to completion within any specified Milestones and the Contract Times. Such acceptance will not impose on ENGINEER responsibility for the progress schedule, for sequencing, scheduling, or progress of the Work nor interfere with or relieve CONTRACTOR from CONTRACTOR's full responsibility therefor.

2. CONTRACTOR's schedule of Shop Drawing and Sample submittals will be acceptable to ENGINEER if it provides a workable arrangement for reviewing and processing the required submittals.

3. CONTRACTOR's schedule of values will be acceptable to ENGINEER as to form and substance if it provides a reasonable allocation of the Contract Price to component parts of the Work.

ARTICLE 3 - CONTRACT DOCUMENTS: INTENT, AMENDING, REUSE

3.01*Intent*

A. The Contract Documents are complementary; what is called for by one is as binding as if called for by all.

B. It is the intent of the Contract Documents to describe a functionally complete Project (or part thereof) to be constructed in accordance with the Contract Documents. Any labor, documentation, services, materials, or equipment that may reasonably be inferred from the Contract Documents or from prevailing custom or trade usage as being required to produce the intended result will be provided whether or not specifically called for at no additional cost to OWNER.

C. Clarifications and interpretations of the Contract Documents shall be issued by ENGINEER as provided in Article 9.

3.02*Reference Standards*

A. *Standards, Specifications, Codes, Laws, and Regulations*

1. Reference to standards, specifications, manuals, or codes of any technical society, organization, or association, or to Laws or Regulations, whether such reference be specific or by implication, shall mean the standard, specification, manual, code, or Laws or Regulations in effect at the time of opening of Bids (or on the Effective Date of the Agreement if there were no Bids), except as may be otherwise specifically stated in the Contract Documents.

2. No provision of any such standard, specification, manual or code, or any instruction of a Supplier shall be effective to change the duties or responsibilities of OWNER, CONTRACTOR, or ENGINEER, or any of their subcontractors, consultants, agents, or employees from those set forth in the Contract Documents, nor shall any such provision or instruction be effective to assign to OWNER, ENGINEER, or any of ENGINEER's Consultants, agents, or employees any duty or authority to supervise or direct the performance of the Work or any duty or authority to undertake responsibility inconsistent with the provisions of the Contract Documents.

3.03 *Reporting and Resolving Discrepancies*

A. *Reporting Discrepancies*

1. If, during the performance of the Work, CONTRACTOR discovers any conflict, error, ambiguity, or discrepancy within the Contract Documents or between the Contract Documents and any provision of any Law or Regulation applicable to the performance of the Work or of any standard, specification, manual or code, or of any instruction of any Supplier, CONTRACTOR shall report it to ENGINEER in writing at once. CONTRACTOR shall not proceed with the Work affected thereby (except in an emergency as required by paragraph 6.16.A) until an amendment or supplement to the Contract Documents has been issued by one of the methods indicated in paragraph 3.04; provided, however, that CONTRACTOR shall not be liable to OWNER or ENGINEER for failure to report any such conflict, error, ambiguity, or discrepancy unless CONTRACTOR knew or reasonably should have known thereof.

B. *Resolving Discrepancies*

1. Except as may be otherwise specifically stated in the Contract Documents, the provisions of the Contract Documents shall take precedence in resolving any conflict, error, ambiguity, or discrepancy between the provisions of the Contract Documents and:

a. the provisions of any standard, specification, manual, code, or instruction (whether or not specifically incorporated by reference in the Contract Documents); or

b. the provisions of any Laws or Regulations applicable to the performance of the Work (unless such an interpretation of the provisions of the Contract Documents would result in violation of such Law or Regulation).

3.04 *Amending and Supplementing Contract Documents*

A. The Contract Documents may be amended to provide for additions, deletions, and revisions in the Work or to modify the terms and conditions thereof in one or more of the following ways: (i) a Written Amendment; (ii) a Change Order; or (iii) a Work Change Directive.

B. The requirements of the Contract Documents may be supplemented, and minor variations and deviations in the Work may be authorized, by one or more of the following ways: (i) a Field Order; (ii) ENGINEER's approval of a Shop Drawing or Sample; or (iii) ENGINEER's written interpretation or clarification.

3.05 *Reuse of Documents*

A. CONTRACTOR and any Subcontractor or Supplier or other individual or entity performing or furnishing any of the Work under a direct or indirect contract with OWNER: (i) shall not have or acquire any title to or ownership rights in any of the Drawings, Specifications, or other documents (or copies of any thereof) prepared by or bearing the seal of ENGINEER or ENGINEER's Consultant, including electronic media editions; and (ii) shall not reuse any of such Drawings, Specifications, other documents, or copies thereof on extensions of the Project or any other project without written consent of OWNER and ENGINEER and specific written verification or adaption by ENGINEER. This prohibition will survive final payment, completion, and acceptance of the Work, or termination or completion of the Contract. Nothing herein shall preclude CONTRACTOR from retaining copies of the Contract Documents for record purposes.

ARTICLE 4 - AVAILABILITY OF LANDS; SUBSURFACE AND PHYSICAL CONDITIONS; REFERENCE POINTS

4.01 *Availability of Lands*

A. OWNER shall furnish the Site. OWNER shall notify CONTRACTOR of any encumbrances or restrictions not of general application but specifically related to use of the Site with which CONTRACTOR must comply in performing the Work. OWNER will obtain in a timely manner and pay for easements for permanent structures or permanent changes in existing facilities. If CONTRACTOR and OWNER are unable to agree on entitlement to or on the amount or extent, if any, of any adjustment in the Contract Price or Contract Times, or both,

as a result of any delay in OWNER's furnishing the Site, CONTRACTOR may make a Claim therefor as provided in paragraph 10.05.

B. Upon reasonable written request, OWNER shall furnish CONTRACTOR with a current statement of record legal title and legal description of the lands upon which the Work is to be performed and OWNER's interest therein as necessary for giving notice of or filing a mechanic's or construction lien against such lands in accordance with applicable Laws and Regulations.

C. CONTRACTOR shall provide for all additional lands and access thereto that may be required for temporary construction facilities or storage of materials and equipment.

4.02 *Subsurface and Physical Conditions*

A. *Reports and Drawings:* The Supplementary Conditions identify:

1. those reports of explorations and tests of subsurface conditions at or contiguous to the Site that ENGINEER has used in preparing the Contract Documents; and

2. those drawings of physical conditions in or relating to existing surface or subsurface structures at or contiguous to the Site (except Underground Facilities) that ENGINEER has used in preparing the Contract Documents.

B. *Limited Reliance by CONTRACTOR on Technical Data Authorized:* CONTRACTOR may rely upon the general accuracy of the "technical data" contained in such reports and drawings, but such reports and drawings are not Contract Documents. Such "technical data" is identified in the Supplementary Conditions. Except for such reliance on such "technical data," CONTRACTOR may not rely upon or make any Claim against OWNER, ENGINEER, or any of ENGINEER's Consultants with respect to:

1. the completeness of such reports and drawings for CONTRACTOR's purposes, including, but not limited to, any aspects of the means, methods, techniques, sequences, and procedures of construction to be employed by CONTRACTOR, and safety precautions and programs incident thereto; or

2. other data, interpretations, opinions, and information contained in such reports or shown or indicated in such drawings; or

3. any CONTRACTOR interpretation of or conclusion drawn from any "technical data" or any such other data, interpretations, opinions, or information.

4.03 *Differing Subsurface or Physical Conditions*

A. *Notice:* If CONTRACTOR believes that any subsurface or physical condition at or contiguous to the Site that is uncovered or revealed either:

1. is of such a nature as to establish that any "technical data" on which CONTRACTOR is entitled to rely as provided in paragraph 4.02 is materially inaccurate; or

2. is of such a nature as to require a change in the Contract Documents; or

3. differs materially from that shown or indicated in the Contract Documents; or

4. is of an unusual nature, and differs materially from conditions ordinarily encountered and generally recognized as inherent in work of the character provided for in the Contract Documents;

then CONTRACTOR shall, promptly after becoming aware thereof and before further disturbing the subsurface or physical conditions or performing any Work in connection therewith (except in an emergency as required by paragraph 6.16.A), notify OWNER and ENGINEER in writing about such condition. CONTRACTOR shall not further disturb such condition or perform any Work in connection therewith (except as aforesaid) until receipt of written order to do so.

B. *ENGINEER's Review:* After receipt of written notice as required by paragraph 4.03.A, ENGINEER will promptly review the pertinent condition, determine the necessity of OWNER's obtaining additional exploration or tests with respect thereto, and advise OWNER in writing (with a copy to CONTRACTOR) of ENGINEER's findings and conclusions.

C. *Possible Price and Times Adjustments*

1. The Contract Price or the Contract Times, or both, will be equitably adjusted to the extent that the existence of such differing subsurface or physical condition causes an increase or decrease in CONTRACTOR's cost of, or time required for, performance of the Work; subject, however, to the following:

a. such condition must meet any one or more of the categories described in paragraph 4.03.A; and

b. with respect to Work that is paid for on a Unit Price Basis, any adjustment in Contract Price will be subject to the provisions of paragraphs 9.08 and 11.03.

2. CONTRACTOR shall not be entitled to any adjustment in the Contract Price or Contract Times if:

a. CONTRACTOR knew of the existence of such conditions at the time CONTRACTOR made a final commitment to OWNER in respect of Contract Price and Contract Times by the submission of a Bid or becoming bound under a negotiated contract; or

b. the existence of such condition could reasonably have been discovered or revealed as a result of any examination, investigation, exploration, test, or study of the Site and contiguous areas required by the Bidding Requirements or Contract Documents to be conducted by or for CONTRACTOR prior to CONTRACTOR's making such final commitment; or

c. CONTRACTOR failed to give the written notice within the time and as required by paragraph 4.03.A.

3. If OWNER and CONTRACTOR are unable to agree on entitlement to or on the amount or extent, if any, of any adjustment in the Contract Price or Contract Times, or both, a Claim may be made therefor as provided in paragraph 10.05. However, OWNER, ENGINEER, and ENGINEER's Consultants shall not be liable to CONTRACTOR for any claims, costs, losses, or damages (including but not limited to all fees and charges of engineers, architects, attorneys, and other professionals and all court or arbitration or other dispute resolution costs) sustained by CONTRACTOR on or in connection with any other project or anticipated project.

4.04 *Underground Facilities*

A. *Shown or Indicated:* The information and data shown or indicated in the Contract Documents with respect to existing Underground Facilities at or contiguous to the Site is based on information and data furnished to OWNER or ENGINEER by the owners of such Underground Facilities, including OWNER, or by others. Unless it is otherwise expressly provided in the Supplementary Conditions:

1. OWNER and ENGINEER shall not be responsible for the accuracy or completeness of any such information or data; and

2. the cost of all of the following will be included in the Contract Price, and CONTRACTOR shall have full responsibility for:

a. reviewing and checking all such information and data,

b. locating all Underground Facilities shown or indicated in the Contract Documents,

c. coordination of the Work with the owners of such Underground Facilities, including OWNER, during construction, and

d. the safety and protection of all such Underground Facilities and repairing any damage thereto resulting from the Work.

B. *Not Shown or Indicated*

1. If an Underground Facility is uncovered or revealed at or contiguous to the Site which was not shown or indicated, or not shown or indicated with reasonable accuracy in the Contract Documents, CONTRACTOR shall, promptly after becoming aware thereof and before further disturbing conditions affected thereby or performing any Work in connection therewith (except in an emergency as required by paragraph 6.16.A), identify the owner of such Underground Facility and give written notice to that owner and to OWNER and ENGINEER. ENGINEER will promptly review the Underground Facility and determine the extent, if any, to which a change is required in the Contract Documents to reflect and document the consequences of the existence or location of the Underground Facility. During such time, CONTRACTOR shall be responsible for the safety and protection of such Underground Facility.

2. If ENGINEER concludes that a change in the Contract Documents is required, a Work Change Directive or a Change Order will be issued to reflect and document such consequences. An equitable adjustment shall be made in the Contract Price of Contract Times, or both, to the extent that they are attributable to the existence or location of any Underground Facility that was not shown or indicated or not shown or indicated with reasonable accuracy in the Contract Documents and that CONTRACTOR did not know of and could not reasonably have been expected to be aware of or to have anticipated. If OWNER and CONTRACTOR

are unable to agree on entitlement to or on the amount or extent, if any, of any such adjustment in Contract Price or Contract Times, OWNER or CONTRACTOR may make a Claim therefor as provided in paragraph 10.05.

4.05 *Reference Points*

A. OWNER shall provide engineering surveys to establish reference points for construction which in ENGINEER's judgment are necessary to enable CONTRACTOR to proceed with the Work. CONTRACTOR shall be responsible for laying out the Work, shall protect and preserve the established reference points and property monuments, and shall make no changes or relocations without the prior written approval of OWNER. CONTRACTOR shall report to ENGINEER whenever any reference point or property monument is lost or destroyed or requires relocation because of necessary changes in grades or locations, and shall be responsible for the accurate replacement or relocation of such reference points or property monuments by professionally qualified personnel.

4.06 *Hazardous Environmental Condition at Site*

A. *Reports and Drawings:* Reference is made to the Supplementary Conditions for the identification of those reports and drawings relating to a Hazardous Environmental Condition identified at the Site, if any, that have been utilized by the ENGINEER in the preparation of the Contract Documents.

B. *Limited Reliance by CONTRACTOR on Technical Data Authorized:* CONTRACTOR may rely upon the general accuracy of the "technical data" contained in such reports and drawings, but such reports and drawings are not Contract Documents. Such "technical data" is identified in the Supplementary Conditions. Except for such reliance on such "technical data," CONTRACTOR may not rely upon or make any Claim against OWNER, ENGINEER or any of ENGINEER's Consultants with respect to:

1. the completeness of such reports and drawings for CONTRACTOR's purposes, including, but not limited to, any aspects of the means, methods, techniques, sequences and procedures of construction to be employed by CONTRACTOR and safety precautions and programs incident thereto; or

2. other data, interpretations, opinions and information contained in such reports or shown or indicated in such drawings; or

3. any CONTRACTOR interpretation of or conclusion drawn from any "technical data" or any such other data, interpretations, opinions or information.

C. CONTRACTOR shall not be responsible for any Hazardous Environmental Condition uncovered or revealed at the Site which was not shown or indicated in Drawings or Specifications or identified in the Contract Documents to be within the scope of the Work. CONTRACTOR shall be responsible for a Hazardous Environmental Condition created with any materials brought to the Site by CONTRACTOR, Subcontractors, Suppliers, or anyone else for whom CONTRACTOR is responsible.

D. If CONTRACTOR encounters a Hazardous Environmental Condition or if CONTRACTOR or anyone for whom CONTRACTOR is responsible creates a Hazardous Environmental Condition, CONTRACTOR shall immediately: (i) secure or otherwise isolate such condition; (ii) stop all Work in connection with such condition and in any area affected thereby (except in an emergency as required by paragraph 6.16); and (iii) notify OWNER and ENGINEER (and promptly thereafter confirm such notice in writing). OWNER shall promptly consult with ENGINEER concerning the necessity for OWNER to retain a qualified expert to evaluate such condition or take corrective action, if any.

E. CONTRACTOR shall not be required to resume Work in connection with such condition or in any affected area until after OWNER has obtained any required permits related thereto and delivered to CONTRACTOR written notice: (i) specifying that such condition and any affected area is or has been rendered safe for the resumption of Work; or (ii) specifying any special conditions under which such Work may be resumed safely. If OWNER and CONTRACTOR cannot agree as to entitlement to or on the amount or extent, if any, of any adjustment in Contract Price or Contract Times, or both, as a result of such Work stoppage or such special conditions under which Work is agreed to be resumed by CONTRACTOR, either party may make a Claim therefor as provided in paragraph 10.05.

F. If after receipt of such written notice CONTRACTOR does not agree to resume such Work based on a reasonable belief it is unsafe, or does not agree to resume such Work under such special conditions, then OWNER may order the portion of the Work that is in the area affected by such condition to be deleted from the Work. If OWNER and CONTRACTOR cannot agree as to entitlement to or on the amount or extent, if any, of an adjustment in Contract Price or Contract Times as a result of deleting such portion of the Work, then either party may make a Claim therefor as provided in paragraph 10.05. OWNER may have such deleted portion of the Work performed by OWNER's own forces or others in accordance with Article 7.

G. To the fullest extent permitted by Laws and Regulations, OWNER shall indemnify and hold harmless CONTRACTOR, Subcontractors, ENGINEER, ENGINEER's Consultants and the officers, directors, partners, employees, agents, other consultants, and subcontractors of each and any of them from and against all claims, costs, losses, and damages (including but not limited to all fees and charges of engineers, architects, attorneys, and other professionals and all court or arbitration or other dispute resolution costs) arising out of or relating to a Hazardous Environmental Condition, provided that such Hazardous Environmental Condition: (i) was not shown or indicated in the Drawings or Specifications or identified in the Contract Documents to be included within the scope of the Work, and (ii) was not created by CONTRACTOR or by anyone for whom CONTRACTOR is responsible. Nothing in this paragraph 4.06.E shall obligate OWNER to indemnify any individual or entity from and against the consequences of that individual's or entity's own negligence.

H. To the fullest extent permitted by Laws and Regulations, CONTRACTOR shall indemnify and hold harmless OWNER, ENGINEER, ENGINEER's Consultants, and the officers, directors, partners, employees, agents, other consultants, and subcontractors of each and any of them from and against all claims, costs, losses, and damages (including but not limited to all fees and charges of engineers, architects, attorneys, and other professionals and all court or arbitration or other dispute resolution costs) arising out of or relating to a Hazardous Environmental Condition created by CONTRACTOR or by anyone for whom CONTRACTOR is responsible. Nothing in this paragraph 4.06.F shall obligate CONTRACTOR to indemnify any individual or entity from and against the consequences of that individual's or entity's own negligence.

I. The provisions of paragraphs 4.02, 4.03, and 4.04 are not intended to apply to a Hazardous Environmental Condition uncovered or revealed at the Site.

ARTICLE 5 - BONDS AND INSURANCE

5.01 *Performance, Payment, and Other Bonds*

A. CONTRACTOR shall furnish performance and payment Bonds, each in an amount at least equal to the Contract Price as security for the faithful performance and payment of all CONTRACTOR's obligations under the Contract Documents. These Bonds shall remain in effect at least until one year after the date when final payment becomes due, except as provided otherwise by Laws or Regulations or by the Contract Documents. CONTRACTOR shall also furnish such other Bonds as are required by the Contract Documents.

B. All Bonds shall be in the form prescribed by the Contract Documents except as provided otherwise by Laws or Regulations, and shall be executed by such sureties as are named in the current list of "Companies Holding Certificates of Authority as Acceptable Sureties on Federal Bonds and as Acceptable Reinsuring Companies" as published in Circular 570 (amended) by the Financial Management Service, Surety Bond Branch, U.S. Department of the Treasury. All Bonds signed by an agent must be accompanied by a certified copy of such agent's authority to act.

C. If the surety on any Bond furnished by CONTRACTOR is declared bankrupt or becomes insolvent or its right to do business is terminated in any state where any part of the Project is located or it ceases to meet the requirements of paragraph 5.01.B, CONTRACTOR shall within 20 days thereafter substitute another Bond and surety, both of which shall comply with the requirements of paragraphs 5.01.B and 5.02.

5.02 *Licensed Sureties and Insurers*

A. All Bonds and insurance required by the Contract Documents to be purchased and maintained by OWNER or CONTRACTOR shall be obtained from surety or insurance companies that are duly licensed or authorized in the jurisdiction in which the Project is located to issue Bonds or insurance policies for the limits and coverages so required. Such surety and insurance companies shall also meet such additional requirements and qualifications as may be provided in the Supplementary Conditions.

5.03 *Certificates of Insurance*

A. CONTRACTOR shall deliver to OWNER, with copies to each additional insured identified in the Supplementary Conditions, certificates of insurance (and other evidence of insurance requested by OWNER or any other additional insured) which CONTRACTOR is required to purchase and maintain. OWNER shall deliver to CONTRACTOR, with copies to each additional insured identified in the Supplementary Conditions, certificates of insurance (and other evidence of insurance requested by CONTRACTOR or any other additional insured) which OWNER is required to purchase and maintain.

5.04 *CONTRACTOR's Liability Insurance*

A. CONTRACTOR shall purchase and maintain such liability and other insurance as is appropriate for the Work being performed and as will provide protection from claims set forth below which may arise out of or result from CONTRACTOR's performance of the Work and

CONTRACTOR's other obligations under the Contract Documents, whether it is to be performed by CONTRACTOR, any Subcontractor or Supplier, or by anyone directly or indirectly employed by any of them to perform any of the Work, or by anyone for whose acts any of them may be liable:

1. claims under workers' compensation, disability benefits, and other similar employee benefit acts;

2. claims for damages because of bodily injury, occupational sickness or disease, or death of CONTRACTOR's employees;

3. claims for damages because of bodily injury, sickness or disease, or death of any person other than CONTRACTOR's employees;

4. claims for damages insured by reasonably available personal injury liability coverage which are sustained: (i) by any person as a result of an offense directly or indirectly related to the employment of such person by CONTRACTOR, or (ii) by any other person for any other reason;

5. claims for damages, other than to the Work itself, because of injury to or destruction of tangible property wherever located, including loss of use resulting therefrom; and

6. claims for damages because of bodily injury or death of any person or property damage arising out of the ownership, maintenance or use of any motor vehicle.

B. The policies of insurance so required by this paragraph 5.04 to be purchased and maintained shall:

1. with respect to insurance required by paragraphs 5.04.A.3 through 5.04.A.6 inclusive, include as additional insureds (subject to any customary exclusion in respect of professional liability) OWNER, ENGINEER, ENGINEER's Consultants, and any other individuals or entities identified in the Supplementary Conditions, all of whom shall be listed as additional insureds, and include coverage for the respective officers, directors, partners, employees, agents, and other consultants and subcontractors of each and any of all such additional insureds, and the insurance afforded to these additional insureds shall provide primary coverage for all claims covered thereby;

2. include at least the specific coverages and be written for not less than the limits of liability provided in the Supplementary Conditions or required by Laws or Regulations, whichever is greater;

3. include completed operations insurance;

4. include contractual liability insurance covering CONTRACTOR's indemnity obligations under paragraphs 6.07, 6.11, and 6.20;

5. contain a provision or endorsement that the coverage afforded will not be canceled, materially changed or renewal refused until at least thirty days prior written notice has been given to OWNER and CONTRACTOR and to each other additional insured identified in the Supplementary Conditions to whom a certificate of insurance has been issued (and the certificates of insurance furnished by the CONTRACTOR pursuant to paragraph 5.03 will so provide);

6. remain in effect at least until final payment and at all times thereafter when CONTRACTOR may be correcting, removing, or replacing defective Work in accordance with paragraph 13.07; and

7. with respect to completed operations insurance, and any insurance coverage written on a claims-made basis, remain in effect for at least two years after final payment (and CONTRACTOR shall furnish OWNER and each other additional insured identified in the Supplementary Conditions, to whom a certificate of insurance has been issued, evidence satisfactory to OWNER and any such additional insured of continuation of such insurance at final payment and one year thereafter).

5.05 *OWNER's Liability Insurance*

A. In addition to the insurance required to be provided by CONTRACTOR under paragraph 5.04, OWNER, at OWNER's option, may purchase and maintain at OWNER's expense OWNER's own liability insurance as will protect OWNER against claims which may arise from operations under the Contract Documents.

5.06 *Property Insurance*

A. Unless otherwise provided in the Supplementary Conditions, OWNER shall purchase and maintain property insurance upon the Work at the Site in the amount of the full replacement cost thereof (subject to such deductible amounts as may be provided in the Supplementary Conditions or required by Laws and Regulations). This insurance shall:

1. include the interests of OWNER, CONTRACTOR, Subcontractors, ENGINEER, ENGINEER's Consultants, and any other individuals or entities identified in the Supplementary Conditions, and the officers, directors, partners, employees, agents, and other consultants and subcontractors of each and any of them, each of whom is deemed to have an insurable interest and shall be listed as an additional insured;

2. be written on a Builder's Risk "all-risk" or open peril or special causes of loss policy form that shall at least include insurance for physical loss or damage to the Work, temporary buildings, false work, and materials and equipment in transit, and shall insure against at least the following perils or causes of loss: fire, lightning, extended coverage, theft, vandalism and malicious mischief, earthquake, collapse, debris removal, demolition occasioned by enforcement of Laws and Regulations, water damage, and such other perils or causes of loss as may be specifically required by the Supplementary Conditions;

3. include expenses incurred in the repair or replacement of any insured property (including but not limited to fees and charges of engineers and architects);

4. cover materials and equipment stored at the Site or at another location that was agreed to in writing by OWNER prior to being incorporated in the Work, provided that such materials and equipment have been included in an Application for Payment recommended by ENGINEER;

5. allow for partial utilization of the Work by OWNER;

6. include testing and startup; and

7. be maintained in effect until final payment is made unless otherwise agreed to in writing by OWNER, CONTRACTOR, and ENGINEER with 30 days written notice to each other additional insured to whom a certificate of insurance has been issued.

B. OWNER shall purchase and maintain such boiler and machinery insurance or additional property insurance as may be required by the Supplementary Conditions or Laws and Regulations which will include the interests of OWNER, CONTRACTOR, Subcontractors, ENGINEER, ENGINEER's Consultants, and any other individuals or entities identified in the Supplementary Conditions, each of whom is deemed to have an insurable interest and shall be listed as an insured or additional insured.

C. All the policies of insurance (and the certificates or other evidence thereof) required to be purchased and maintained in accordance with paragraph 5.06 will contain a provision or endorsement that the coverage afforded will not be canceled or materially changed or renewal refused until at least 30 days prior written notice has been given to OWNER and CONTRACTOR and to each other additional insured to whom a certificate of insurance has been issued and will contain waiver provisions in accordance with paragraph 5.07.

D. OWNER shall not be responsible for purchasing and maintaining any property insurance specified in this paragraph 5.06 to protect the interests of CONTRACTOR, Subcontractors, or others in the Work to the extent of any deductible amounts that are identified in the Supplementary Conditions. The risk of loss within such identified deductible amount will be borne by CONTRACTOR, Subcontractors, or others suffering any such loss, and if any of them wishes property insurance coverage within the limits of such amounts, each may purchase and maintain it at the purchaser's own expense.

E. If CONTRACTOR requests in writing that other special insurance be included in the property insurance policies provided under paragraph 5.06, OWNER shall, if possible, include such insurance, and the cost thereof will be charged to CONTRACTOR by appropriate Change Order or Written Amendment. Prior to commencement of the Work at the Site, OWNER shall in writing advise CONTRACTOR whether or not such other insurance has been procured by OWNER.

5.07 *Waiver of Rights*

A. OWNER and CONTRACTOR intend that all policies purchased in accordance with paragraph 5.06 will protect OWNER, CONTRACTOR, Subcontractors, ENGINEER, ENGINEER's Consultants, and all other individuals or entities identified in the Supplementary Conditions to be listed as insureds or additional insureds (and the officers, directors, partners, employees, agents, and other consultants and subcontractors of each and any of them) in such policies and will provide primary coverage for all losses and damages caused by the perils or causes of loss covered thereby. All such policies shall contain provisions to the effect that in the event of payment of any loss or damage the insurers will have no rights of recovery against any of the insureds or additional insureds thereunder. OWNER and CONTRACTOR waive all rights against each other and their respective officers, directors, partners, employees, agents, and other consultants and subcontractors of each and any of them for all losses and damages caused by, arising out of or resulting from any of the perils or causes of loss covered by such policies and any other property insurance applicable to the Work; and, in

addition, waive all such rights against Subcontractors, ENGINEER, ENGINEER's Consultants, and all other individuals or entities identified in the Supplementary Conditions to be listed as insureds or additional insureds (and the officers, directors, partners, employees, agents, and other consultants and subcontractors of each and any of them) under such policies for losses and damages so caused. None of the above waivers shall extend to the rights that any party making such waiver may have to the proceeds of insurance held by OWNER as trustee or otherwise payable under any policy so issued.

B. OWNER waives all rights against CONTRACTOR, Subcontractors, ENGINEER, ENGINEER's Consultants, and the officers, directors, partners, employees, agents, and other consultants and subcontractors of each and any of them for:

1. loss due to business interruption, loss of use, or other consequential loss extending beyond direct physical loss or damage to OWNER's property or the Work caused by, arising out of, or resulting from fire or other peril whether or not insured by OWNER; and

2. loss or damage to the completed Project or part thereof caused by, arising out of, or resulting from fire or other insured peril or cause of loss covered by any property insurance maintained on the completed Project or part thereof by OWNER during partial utilization pursuant to paragraph 14.05, after Substantial Completion pursuant to paragraph 14.04, or after final payment pursuant to paragraph 14.07.

C. Any insurance policy maintained by OWNER covering any loss, damage or consequential loss referred to in paragraph 5.07.B shall contain provisions to the effect that in the event of payment of any such loss, damage, or consequential loss, the insurers will have no rights of recovery against CONTRACTOR, Subcontractors, ENGINEER, or ENGINEER's Consultants and the officers, directors, partners, employees, agents, and other consultants and subcontractors of each and any of them.

5.08 *Receipt and Application of Insurance Proceeds*

A. Any insured loss under the policies of insurance required by paragraph 5.06 will be adjusted with OWNER and made payable to OWNER as fiduciary for the insureds, as their interests may appear, subject to the requirements of any applicable mortgage clause and of paragraph 5.08.B. OWNER shall deposit in a separate account any money so received and shall distribute it in accordance with such agreement as the parties in interest may reach. If no other special agreement is reached, the damaged Work shall be repaired or replaced, the moneys so received applied on account thereof, and the Work and the cost thereof covered by an appropriate Change Order or Written Amendment.

B. OWNER as fiduciary shall have power to adjust and settle any loss with the insurers unless one of the parties in interest shall object in writing within 15 days after the occurrence of loss to OWNER's exercise of this power. If such objection be made, OWNER as fiduciary shall make settlement with the insurers in accordance with such agreement as the parties in interest may reach. If no such agreement among the parties in interest is reached, OWNER as fiduciary shall adjust and settle the loss with the insurers and, if required in writing by any party in interest, OWNER as fiduciary shall give bond for the proper performance of such duties.

5.09 *Acceptance of Bonds and Insurance; Option to Replace*

A. If either OWNER or CONTRACTOR has any objection to the coverage afforded by or other provisions of the Bonds or insurance required to be purchased and maintained by the other party in accordance with Article 5 on the basis of non-conformance with the Contract Documents, the objecting party shall so notify the other party in writing within 10 days after receipt of the certificates (or other evidence requested) required by paragraph 2.05.C. OWNER and CONTRACTOR shall each provide to the other such additional information in respect of insurance provided as the other may reasonably request. If either party does not purchase or maintain all of the Bonds and insurance required of such party by the Contract Documents, such party shall notify the other party in writing of such failure to purchase prior to the start of the Work, or of such failure to maintain prior to any change in the required coverage. Without prejudice to any other right or remedy, the other party may elect to obtain equivalent Bonds or insurance to protect such other party's interests at the expense of the party who was required to provide such coverage, and a Change Order shall be issued to adjust the Contract Price accordingly.

5.10 *Partial Utilization, Acknowledgment of Property Insurer*

A. If OWNER finds it necessary to occupy or use a portion or portions of the Work prior to Substantial Completion of all the Work as provided in paragraph 14.05, no such use or occupancy shall commence before the insurers providing the property insurance pursuant to paragraph 5.06 have acknowledged notice thereof and in writing effected any changes in coverage necessitated thereby. The insurers providing the property insurance shall consent by endorsement on the policy or policies, but the property insurance shall not be canceled or permitted to lapse on account of any such partial use or occupancy.

ARTICLE 6 - CONTRACTOR'S RESPONSIBILITIES

6.01 *Supervision and Superintendence*

A. CONTRACTOR shall supervise, inspect, and direct the Work competently and efficiently, devoting such attention thereto and applying such skills and expertise as may be necessary to perform the Work in accordance with the Contract Documents. CONTRACTOR shall be solely responsible for the means, methods, techniques, sequences, and procedures of construction, but CONTRACTOR shall not be responsible for the negligence of OWNER or ENGINEER in the design or specification of a specific means, method, technique, sequence, or procedure of construction which is shown or indicated in and expressly required by the Contract Documents. CONTRACTOR shall be responsible to see that the completed Work complies accurately with the Contract Documents.

B. At all times during the progress of the Work, CONTRACTOR shall assign a competent resident superintendent thereto who shall not be replaced without written notice to OWNER and ENGINEER except under extraordinary circumstances. The superintendent will be CONTRACTOR's representative at the Site and shall have authority to act on behalf of CONTRACTOR. All communications given to or received from the superintendent shall be binding on CONTRACTOR.

6.02 *Labor; Working Hours*

A. CONTRACTOR shall provide competent, suitably qualified personnel to survey, lay out, and construct the Work as required by the Contract Documents. CONTRACTOR shall at all times maintain good discipline and order at the Site.

B. Except as otherwise required for the safety or protection of persons or the Work or property at the Site or adjacent thereto, and except as otherwise stated in the Contract Documents, all Work at the Site shall be performed during regular working hours, and CONTRACTOR will not permit overtime work or the performance of Work on Saturday, Sunday, or any legal holiday without OWNER's written consent (which will not be unreasonably withheld) given after prior written notice to ENGINEER.

6.03 *Services, Materials, and Equipment*

A. Unless otherwise specified in the General Requirements, CONTRACTOR shall provide and assume full responsibility for all services, materials, equipment, labor, transportation, construction equipment and machinery, tools, appliances, fuel, power, light, heat, telephone, water, sanitary facilities, temporary facilities, and all other facilities and incidentals necessary for the performance, testing, start-up, and completion of the Work.

B. All materials and equipment incorporated into the Work shall be as specified or, if not specified, shall be of good quality and new, except as otherwise provided in the Contract Documents. All warranties and guarantees specifically called for by the Specifications shall expressly run to the benefit of OWNER. If required by ENGINEER, CONTRACTOR shall furnish satisfactory evidence (including reports of required tests) as to the source, kind, and quality of materials and equipment. All materials and equipment shall be stored, applied, installed, connected, erected, protected, used, cleaned, and conditioned in accordance with instructions of the applicable Supplier, except as otherwise may be provided in the Contract Documents.

6.04 *Progress Schedule*

A. CONTRACTOR shall adhere to the progress schedule established in accordance with paragraph 2.07 as it may be adjusted from time to time as provided below.

1. CONTRACTOR shall submit to ENGINEER for acceptance (to the extent indicated in paragraph 2.07) proposed adjustments in the progress schedule that will not result in changing the Contract Times (or Milestones). Such adjustments will conform generally to the progress schedule then in effect and additionally will comply with any provisions of the General Requirements applicable thereto.

2. Proposed adjustments in the progress schedule that will change the Contract Times (or Milestones) shall be submitted in accordance with the requirements of Article 12. Such adjustments may only be made by a Change Order or Written Amendment in accordance with Article 12.

6.05 *Substitutes and "Or-Equals"*

A. Whenever an item of material or equipment is specified or described in the Contract Documents by using the name of a proprietary item or the name of a particular Supplier, the specification or description is intended to establish the type, function, appearance, and quality required. Unless the specification or description contains or is followed by words reading that no like, equivalent, or "or-equal" item or no substitution is permitted, other items of material or equipment or material or equipment of other Suppliers may be submitted to ENGINEER for review under the circumstances described below.

1. *"Or-Equal" Items:* If in ENGINEER's sole discretion an item of material or equipment proposed by CONTRACTOR is functionally equal to that named and sufficiently similar so that no change in related Work will be required, it may be considered by ENGINEER as an "or-equal" item, in which case review and approval of the proposed item may, in ENGINEER's sole discretion, be accomplished without compliance with some or all of the requirements for approval of proposed substitute items. For the purposes of this paragraph 6.05.A.1, a proposed item of material or equipment will be considered functionally equal to an item so named if:

a. in the exercise of reasonable judgment ENGINEER determines that: (i) it is at least equal in quality, durability, appearance, strength, and design characteristics; (ii) it will reliably perform at least equally well the function imposed by the design concept of the completed Project as a functioning whole, and;

b. CONTRACTOR certifies that: (i) there is no increase in cost to the OWNER; and (ii) it will conform substantially, even with deviations, to the detailed requirements of the item named in the Contract Documents.

2. Substitute Items

a. If in ENGINEER's sole discretion an item of material or equipment proposed by CONTRACTOR does not qualify as an "or-equal" item under paragraph 6.05.A.1, it will be considered a proposed substitute item.

b. CONTRACTOR shall submit sufficient information as provided below to allow ENGINEER to determine that the item of material or equipment proposed is essentially equivalent to that named and an acceptable substitute therefor. Requests for review of proposed substitute items of material or equipment will not be accepted by ENGINEER from anyone other than CONTRACTOR.

c. The procedure for review by ENGINEER will be as set forth in paragraph 6.05.A.2.d, as supplemented in the General Requirements and as ENGINEER may decide is appropriate under the circumstances.

d. CONTRACTOR shall first make written application to ENGINEER for review of a proposed substitute item of material or equipment that CONTRACTOR seeks to furnish or use. The application shall certify that the proposed substitute item will perform adequately the functions and achieve the results called for by the general design, be similar in substance to that specified, and be suited to the same use as that specified. The application will state the extent, if any, to which the use of the proposed substitute item will prejudice CONTRACTOR's achievement of Substantial Completion on time, whether or not use of the proposed substitute item in the Work will require a change in any of the Contract Documents (or in the provisions of any other direct contract with OWNER for work on the Project) to adapt the design to the proposed substitute item and whether or not incorporation or use of the proposed substitute item in connection with the Work is subject to payment of any license fee or royalty. All variations of the proposed substitute item from that specified will be identified in the application, and available engineering, sales, maintenance, repair, and replacement services will be indicated. The application will also contain an itemized estimate of all costs or credits that will result directly or indirectly from use of such substitute item, including costs of redesign and claims of other contractors affected by any resulting change, all of which will be considered by ENGINEER in evaluating the proposed substitute item. ENGINEER may require CONTRACTOR to furnish additional data about the proposed substitute item.

B. *Substitute Construction Methods or Procedures:* If a specific means, method, technique, sequence, or procedure of construction is shown or indicated in and expressly required by the Contract Documents, CONTRACTOR may furnish or utilize a substitute means, method, technique, sequence, or procedure of construction approved by ENGINEER. CONTRACTOR shall submit sufficient information to allow ENGINEER, in ENGINEER's sole discretion, to determine that the substitute proposed is equivalent to that expressly called for by the Contract Documents. The procedure for review by ENGINEER will be similar to that provided in subparagraph 6.05.A.2.

C. *Engineer's Evaluation:* ENGINEER will be allowed a reasonable time within which to evaluate each proposal or submittal made pursuant to paragraphs 6.05.A and 6.05.B. ENGINEER will be the sole judge of acceptability. No "or-equal" or substitute will be ordered, installed or utilized until ENGINEER's review is complete, which will be evidenced by either a Change Order for a substitute or an approved Shop Drawing for an "or equal." ENGINEER will advise CONTRACTOR in writing of any negative determination.

D. *Special Guarantee:* OWNER may require CONTRACTOR to furnish at CONTRACTOR's expense a special performance guarantee or other surety with respect to any substitute.

E. *ENGINEER's Cost Reimbursement:* ENGINEER will record time required by ENGINEER and ENGINEER's Consultants in evaluating substitute proposed or submitted by CONTRACTOR pursuant to paragraphs 6.05.A.2 and 6.05.B and in making changes in the Contract Documents (or in the provisions of any other direct contract with OWNER for work on the Project) occasioned thereby. Whether or not ENGINEER approves a substitute item so proposed or submitted by CONTRACTOR, CONTRACTOR shall reimburse OWNER for the charges of ENGINEER and ENGINEER's Consultants for evaluating each such proposed substitute.

F. *CONTRACTOR's Expense:* CONTRACTOR shall provide all data in support of any proposed substitute or "or-equal" at CONTRACTOR's expense.

6.06 *Concerning Subcontractors, Suppliers, and Others*

A. CONTRACTOR shall not employ any Subcontractor, Supplier, or other individual or entity (including those acceptable to OWNER as indicated in paragraph 6.06.B), whether initially or as a replacement, against whom OWNER may have reasonable objection. CONTRACTOR shall not be required to employ any Subcontractor, Supplier, or other individual or entity to furnish or perform any of the Work against whom CONTRACTOR has reasonable objection.

B. If the Supplementary Conditions require the identity of certain Subcontractors, Suppliers, or other individuals or entities to be submitted to OWNER in advance for acceptance by OWNER by a specified date prior to the Effective Date of the Agreement, and if CONTRACTOR has submitted a list thereof in accordance with the Supplementary Conditions, OWNER's acceptance (either in writing or by failing to make written objection thereto by the date indicated for acceptance or objection in the Bidding Documents or the Contract Documents) of any such Subcontractor, Supplier, or other individual or entity so identified may be revoked on the basis of reasonable objection after due investigation. CONTRACTOR shall submit an acceptable replacement for the rejected Subcontractor, Supplier, or other individual or entity, and the Contract Price will be adjusted by the difference in the cost occasioned by such replacement, and an appropriate Change Order will be issued or Written Amendment signed. No acceptance by OWNER of any such Subcontractor, Supplier, or other individual or entity, whether initially or as a replacement, shall constitute a waiver of any right of OWNER or ENGINEER to reject defective Work.

C. CONTRACTOR shall be fully responsible to OWNER and ENGINEER for all acts and omissions of the Subcontractors, Suppliers, and other individuals or entities performing or furnishing any of the Work just as CONTRACTOR is responsible for CONTRACTOR's own acts and omissions. Nothing in the Contract Documents shall create for the benefit of any such Subcontractor, Supplier, or other individual or entity any contractual relationship between OWNER or ENGINEER and any such Subcontractor, Supplier or other individual or entity, nor shall it create any obligation on the part of OWNER or ENGINEER to pay or to see to the payment of any moneys due any such Subcontractor, Supplier, or other individual or entity except as may otherwise be required by Laws and Regulations.

D. CONTRACTOR shall be solely responsible for scheduling and coordinating the Work of Subcontractors, Suppliers, and other individuals or entities performing or furnishing any of the Work under a direct or indirect contract with CONTRACTOR.

E. CONTRACTOR shall require all Subcontractors, Suppliers, and such other individuals or entities performing or furnishing any of the Work to communicate with ENGINEER through CONTRACTOR.

F. The divisions and sections of the Specifications and the identifications of any Drawings shall not control CONTRACTOR in dividing the Work among Subcontractors or Suppliers or delineating the Work to be performed by any specific trade.

G. All Work performed for CONTRACTOR by a Subcontractor or Supplier will be pursuant to an appropriate agreement between CONTRACTOR and the Subcontractor or Supplier which specifically binds the Subcontractor or Supplier to the applicable terms and conditions of the Contract Documents for the benefit of OWNER and ENGINEER. Whenever any such agreement is with a Subcontractor or Supplier who is listed as an additional insured on the property insurance provided in paragraph 5.06, the agreement between the CONTRACTOR and the Subcontractor or Supplier will contain provisions whereby the Subcontractor or Supplier waives all rights against OWNER, CONTRACTOR, ENGINEER, ENGINEER's Consultants, and all other individuals or entities identified in the Supplementary Conditions to be listed as insureds or additional insureds (and the officers, directors, partners, employees, agents, and other consultants and subcontractors of each and any of them) for all losses and damages caused by, arising out of, relating to, or resulting from any of the perils or causes of loss covered by such policies and any other property insurance applicable to the Work. If the insurers on any such policies require separate waiver forms

to be signed by any Subcontractor or Supplier, CONTRACTOR will obtain the same.

6.07 *Patent Fees and Royalties*

A. CONTRACTOR shall pay all license fees and royalties and assume all costs incident to the use in the performance of the Work or the incorporation in the Work of any invention, design, process, product, or device which is the subject of patent rights or copyrights held by others. If a particular invention, design, process, product, or device is specified in the Contract Documents for use in the performance of the Work and if to the actual knowledge of OWNER or ENGINEER its use is subject to patent rights or copyrights calling for the payment of any license fee or royalty to others, the existence of such rights shall be disclosed by OWNER in the Contract Documents. To the fullest extent permitted by Laws and Regulations, CONTRACTOR shall indemnify and hold harmless OWNER, ENGINEER, ENGINEER's Consultants, and the officers, directors, partners, employees or agents, and other consultants of each and any of them from and against all claims, costs, losses, and damages (including but not limited to all fees and charges of engineers, architects, attorneys, and other professionals and all court or arbitration or other dispute resolution costs) arising out of or relating to any infringement of patent rights or copyrights incident to the use in the performance of the Work or resulting from the incorporation in the Work of any invention, design, process, product, or device not specified in the Contract Documents.

6.08 *Permits*

A. Unless otherwise provided in the Supplementary Conditions, CONTRACTOR shall obtain and pay for all construction permits and licenses. OWNER shall assist CONTRACTOR, when necessary, in obtaining such permits and licenses. CONTRACTOR shall pay all governmental charges and inspection fees necessary for the prosecution of the Work which are applicable at the time of opening of Bids, or, if there are no Bids, on the Effective Date of the Agreement. CONTRACTOR shall pay all charges of utility owners for connections to the Work, and OWNER shall pay all charges of such utility owners for capital costs related thereto, such as plant investment fees.

6.09 *Laws and Regulations*

A. CONTRACTOR shall give all notices and comply with all Laws and Regulations applicable to the performance of the Work. Except where otherwise expressly required by applicable Laws and Regulations, neither OWNER nor ENGINEER shall be responsible for monitoring CONTRACTOR's compliance with any Laws or Regulations.

B. If CONTRACTOR performs any Work knowing or having reason to know that it is contrary to Laws or Regulations, CONTRACTOR shall bear all claims, costs, losses, and damages (including but not limited to all fees and charges of engineers, architects, attorneys, and other professionals and all court or arbitration or other dispute resolution costs) arising out of or relating to such Work; however, it shall not be CONTRACTOR's primary responsibility to make certain that the Specifications and Drawings are in accordance with Laws and Regulations, but this shall not relieve CONTRACTOR of CONTRACTOR's obligations under paragraph 3.03.

C. Changes in Laws or Regulations not known at the time of opening of Bids (or, on the Effective Date of the Agreement if there were no Bids) having an effect on the cost or time of performance of the Work may be the subject of an adjustment in Contract Price or Contract Times. If OWNER and CONTRACTOR are unable to agree on entitlement to or on the amount or extent, if any, of any such adjustment, a Claim may be made therefor as provided in paragraph 10.05.

6.10 *Taxes*

A. CONTRACTOR shall pay all sales, consumer, use, and other similar taxes required to be paid by CONTRACTOR in accordance with the Laws and Regulations of the place of the Project which are applicable during the performance of the Work.

6.11 *Use of Site and Other Areas*

A. *Limitation on Use of Site and Other Areas*

1. CONTRACTOR shall confine construction equipment, the storage of materials and equipment, and the operations of workers to the Site and other areas permitted by Laws and Regulations, and shall not unreasonably encumber the Site and other areas with construction equipment or other materials or equipment. CONTRACTOR shall assume full responsibility for any damage to any such land or area, or to the owner or occupant thereof, or of any adjacent land or areas resulting from the performance of the Work.

2. Should any claim be made by any such owner or occupant because of the performance of the Work, CONTRACTOR shall promptly settle with such other party by negotiation or otherwise resolve the claim by arbitration or other dispute resolution proceeding or at law.

3. To the fullest extent permitted by Laws and Regulations, CONTRACTOR shall indemnify and hold harmless OWNER, ENGINEER,

ENGINEER's Consultant, and the officers, directors, partners, employees, agents, and other consultants of each and any of them from and against all claims, costs, losses, and damages (including but not limited to all fees and charges of engineers, architects, attorneys, and other professionals and all court or arbitration or other dispute resolution costs) arising out of or relating to any claim or action, legal or equitable, brought by any such owner or occupant against OWNER, ENGINEER, or any other party indemnified hereunder to the extent caused by or based upon CONTRACTOR's performance of the Work.

B. *Removal of Debris During Performance of the Work:* During the progress of the Work CONTRACTOR shall keep the Site and other areas free from accumulations of waste materials, rubbish, and other debris. Removal and disposal of such waste materials, rubbish, and other debris shall conform to applicable Laws and Regulations.

C. *Cleaning:* Prior to Substantial Completion of the Work CONTRACTOR shall clean the Site and make it ready for utilization by OWNER. At the completion of the Work CONTRACTOR shall remove from the Site all tools, appliances, construction equipment and machinery, and surplus materials and shall restore to original condition all property not designated for alteration by the Contract Documents.

D. *Loading Structures:* CONTRACTOR shall not load nor permit any part of any structure to be loaded in any manner that will endanger the structure, nor shall CONTRACTOR subject any part of the Work or adjacent property to stresses or pressures that will endanger it.

6.12 *Record Documents*

A. CONTRACTOR shall maintain in a safe place at the Site one record copy of all Drawings, Specifications, Addenda, Written Amendments, Change Orders, Work Change Directives, Field Orders, and written interpretations and clarifications in good order and annotated to show changes made during construction. These record documents together with all approved Samples and a counterpart of all approved Shop Drawings will be available to ENGINEER for reference. Upon completion of the Work, these record documents, Samples, and Shop Drawings will be delivered to ENGINEER for OWNER.

6.13 *Safety and Protection*

A. CONTRACTOR shall be solely responsible for initiating, maintaining and supervising all safety precautions and programs in connection with the Work. CONTRACTOR shall take all necessary precautions for the safety of, and shall provide the necessary protection to prevent damage, injury or loss to:

1. all persons on the Site or who may be affected by the Work;

2. all the Work and materials and equipment to be incorporated therein, whether in storage on or off the Site; and

3. other property at the Site or adjacent thereto, including trees, shrubs, lawns, walks, pavements, roadways, structures, utilities, and Underground Facilities not designated for removal, relocation, or replacement in the course of construction.

B. CONTRACTOR shall comply with all applicable Laws and Regulations relating to the safety of persons or property, or to the protection of persons or property from damage, injury, or loss; and shall erect and maintain all necessary safeguards for such safety and protection. CONTRACTOR shall notify owners of adjacent property and of Underground Facilities and other utility owners when prosecution of the Work may affect them, and shall cooperate with them in the protection, removal, relocation, and replacement of their property. All damage, injury, or loss to any property referred to in paragraph 6.13.A.2 or 6.13.A.3 caused, directly or indirectly, in whole or in part, by CONTRACTOR, any Subcontractor, Supplier, or any other individual or entity directly or indirectly employed by any of them to perform any of the Work, or anyone for whose acts any of them may be liable, shall be remedied by CONTRACTOR (except damage or loss attributable to the fault of Drawings or Specifications or to the acts or omissions of OWNER or ENGINEER or ENGINEER's Consultant, or anyone employed by any of them, or anyone for whose acts any of them may be liable, and not attributable, directly or indirectly, in whole or in part, to the fault or negligence of CONTRACTOR or any Subcontractor, Supplier, or other individual or entity directly or indirectly employed by any of them). CONTRACTOR's duties and responsibilities for safety and for protection of the Work shall continue until such time as all the Work is completed and ENGINEER has issued a notice to OWNER and CONTRACTOR in accordance with paragraph 14.07.B that the Work is acceptable (except as otherwise expressly provided in connection with Substantial Completion).

6.14 *Safety Representative*

A. CONTRACTOR shall designate a qualified and experienced safety representative at the Site whose duties and responsibilities shall be the prevention of accidents and the maintaining and supervising of safety precautions and programs.

6.15 *Hazard Communication Programs*

A. CONTRACTOR shall be responsible for coordinating any exchange of material safety data sheets or other hazard communication information required to be made available to or exchanged between or among employers at the Site in accordance with Laws or Regulations.

6.16 *Emergencies*

A. In emergencies affecting the safety or protection of persons or the Work or property at the Site or adjacent thereto, CONTRACTOR is obligated to act to prevent threatened damage, injury, or loss. CONTRACTOR shall give ENGINEER prompt written notice if CONTRACTOR believes that any significant changes in the Work or variations from the Contract Documents have been caused thereby or are required as a result thereof. If ENGINEER determines that a change in the Contract Documents is required because of the action taken by CONTRACTOR in response to such an emergency, a Work Change Directive or Change Order will be issued.

6.17 *Shop Drawings and Samples*

A. CONTRACTOR shall submit Shop Drawings to ENGINEER for review and approval in accordance with the acceptable schedule of Shop Drawings and Sample submittals. All submittals will be identified as ENGINEER may require and in the number of copies specified in the General Requirements. The data shown on the Shop Drawings will be complete with respect to quantities, dimensions, specified performance and design criteria, materials, and similar data to show ENGINEER the services, materials, and equipment CONTRACTOR proposes to provide and to enable ENGINEER to review the information for the limited purposes required by paragraph 6.17.E.

B. CONTRACTOR shall also submit Samples to ENGINEER for review and approval in accordance with the acceptable schedule of Shop Drawings and Sample submittals. Each Sample will be identified clearly as to material, Supplier, pertinent data such as catalog numbers, and the use for which intended and otherwise as ENGINEER may require to enable ENGINEER to review the submittal for the limited purposes required by paragraph 6.17.E. The numbers of each Sample to be submitted will be as specified in the Specifications.

C. Where a Shop Drawing or Sample is required by the Contract Documents or the schedule of Shop Drawings and Sample submittals acceptable to ENGINEER as required by paragraph 2.07, any related Work performed prior to ENGINEER's review and approval of the pertinent submittal will be at the sole expense and responsibility of CONTRACTOR.

D. *Submittal Procedures*

1. Before submitting each Shop Drawing or Sample, CONTRACTOR shall have determined and verified:

a. all field measurements, quantities, dimensions, specified performance criteria, installation requirements, materials, catalog numbers, and similar information with respect thereto;

b. all materials with respect to intended use, fabrication, shipping, handling, storage, assembly, and installation pertaining to the performance of the Work;

c. all information relative to means, methods, techniques, sequences, and procedures of construction and safety precautions and programs incident thereto; and

d. CONTRACTOR shall also have reviewed and coordinated each Shop Drawing or Sample with other Shop Drawings and Samples and with the requirements of the Work and the Contract Documents.

2. Each submittal shall bear a stamp or specific written indication that CONTRACTOR has satisfied CONTRACTOR's obligations under the Contract Documents with respect to CONTRACTOR's review and approval of that submittal.

3. At the time of each submittal, CONTRACTOR shall give ENGINEER specific written notice of such variations, if any, that the Shop Drawing or Sample submitted may have from the requirements of the Contract Documents, such notice to be in a written communication separate from the submittal; and, in addition, shall cause a specific notation to be made on each Shop Drawing and Sample submitted to ENGINEER for review and approval of each such variation.

E. *ENGINEER's Review*

1. ENGINEER will timely review and approve Shop Drawings and Samples in accordance with the schedule of Shop Drawings and Sample submittals acceptable to ENGINEER. ENGINEER's review and approval will be only to determine if the items covered by the submittals will,

after installation or incorporation in the Work, conform to the information given in the Contract Documents and be compatible with the design concept of the completed Project as a functioning whole as indicated by the Contract Documents.

2. ENGINEER's review and approval will not extend to means, methods, techniques, sequences, or procedures of construction (except where a particular means, method, technique, sequence, or procedure of construction is specifically and expressly called for by the Contract Documents) or to safety precautions or programs incident thereto. The review and approval of a separate item as such will not indicate approval of the assembly in which the item functions.

3. ENGINEER's review and approval of Shop Drawings or Samples shall not relieve CONTRACTOR from responsibility for any variation from the requirements of the Contract Documents unless CONTRACTOR has in writing called ENGINEER's attention to each such variation at the time of each submittal as required by paragraph 6.17.D.3 and ENGINEER has given written approval of each such variation by specific written notation thereof incorporated in or accompanying the Shop Drawing or Sample approval; nor will any approval by ENGINEER relieve CONTRACTOR from responsibility for complying with the requirements of paragraph 6.17.D.1.

F. *Resubmittal Procedures*

1. CONTRACTOR shall make corrections required by ENGINEER and shall return the required number of corrected copies of Shop Drawings and submit as required new Samples for review and approval. CONTRACTOR shall direct specific attention in writing to revisions other than the corrections called for by ENGINEER on previous submittals.

6.18 *Continuing the Work*

A. CONTRACTOR shall carry on the Work and adhere to the progress schedule during all disputes or disagreements with OWNER. No Work shall be delayed or postponed pending resolution of any disputes or disagreements, except as permitted by paragraph 15.04 or as OWNER and CONTRACTOR may otherwise agree in writing.

6.19 *CONTRACTOR's General Warranty and Guarantee*

A. CONTRACTOR warrants and guarantees to OWNER, ENGINEER, and ENGINEER's Consultants that all Work will be in accordance with the Contract Documents and will not be defective. CONTRACTOR's warranty and guarantee hereunder excludes defects or damage caused by:

1. abuse, modification, or improper maintenance or operation by persons other than CONTRACTOR, Subcontractors, Suppliers, or any other individual or entity for whom CONTRACTOR is responsible; or

2. normal wear and tear under normal usage.

B. CONTRACTOR's obligation to perform and complete the Work in accordance with the Contract Documents shall be absolute. None of the following will constitute an acceptance of Work that is not in accordance with the Contract Documents or a release of CONTRACTOR's obligation to perform the Work in accordance with the Contract Documents:

1. observations by ENGINEER;

2. recommendation by ENGINEER or payment by OWNER of any progress or final payment;

3. the issuance of a certificate of Substantial Completion by ENGINEER or any payment related thereto by OWNER;

4. use or occupancy of the Work or any part thereof by OWNER;

5. any acceptance by OWNER or any failure to do so;

6. any review and approval of a Shop Drawing or Sample submittal or the issuance of a notice of acceptability by ENGINEER;

7. any inspection, test, or approval by others; or

8. any correction of defective Work by OWNER.

6.20 *Indemnification*

A. To the fullest extent permitted by Laws and Regulations, CONTRACTOR shall indemnify and hold harmless OWNER, ENGINEER, ENGINEER's

Consultants, and the officers, directors, partners, employees, agents, and other consultants and subcontractors of each and any of them from and against all claims, costs, losses, and damages (including but not limited to all fees and charges of engineers, architects, attorneys, and other professionals and all court or arbitration or other dispute resolution costs) arising out of or relating to the performance of the Work, provided that any such claim, cost, loss, or damage:

1. is attributable to bodily injury, sickness, disease, or death, or to injury to or destruction of tangible property (other than the Work itself), including the loss of use resulting therefrom; and

2. is caused in whole or in part by any negligent act or omission of CONTRACTOR, any Subcontractor, any Supplier, or any individual or entity directly or indirectly employed by any of them to perform any of the Work or anyone for whose acts any of them may be liable, regardless of whether or not caused in part by any negligence or omission of an individual or entity indemnified hereunder or whether liability is imposed upon such indemnified party by Laws and Regulations regardless of the negligence of any such individual or entity.

B. In any and all claims against OWNER or ENGINEER or any of their respective consultants, agents, officers, directors, partners, or employees by any employee (or the survivor or personal representative of such employee) of CONTRACTOR, any Subcontractor, any Supplier, or any individual or entity directly or indirectly employed by any of them to perform any of the Work, or anyone for whose acts any of them may be liable, the indemnification obligation under paragraph 6.20.A shall not be limited in any way by any limitation on the amount or type of damages, compensation, or benefits payable by or for CONTRACTOR or any such Subcontractor, Supplier, or other individual or entity under workers' compensation acts, disability benefit acts, or other employee benefit acts.

C. The indemnification obligations of CONTRACTOR under paragraph 6.20.A shall not extend to the liability of ENGINEER and ENGINEER's Consultants or to the officers, directors, partners, employees, agents, and other consultants and subcontractors of each and any of them arising out of:

1. the preparation or approval of, or the failure to prepare or approve, maps, Drawings, opinions, reports, surveys, Change Orders, designs, or Specifications; or

2. giving directions or instructions, or failing to give them, if that is the primary cause of the injury or damage.

ARTICLE 7 - OTHER WORK

7.01 *Related Work at Site*

A. OWNER may perform other work related to the Project at the Site by OWNER's employees, or let other direct contracts therefor, or have other work performed by utility owners. If such other work is not noted in the Contract Documents, then:

1. written notice thereof will be given to CONTRACTOR prior to starting any such other work; and

2. if OWNER and CONTRACTOR are unable to agree on entitlement to or on the amount or extent, if any, of any adjustment in the Contract Price or Contract Times that should be allowed as a result of such other work, a Claim may be made therefor as provided in paragraph 10.05.

B. CONTRACTOR shall afford each other contractor who is a party to such a direct contract and each utility owner (and OWNER, if OWNER is performing the other work with OWNER's employees) proper and safe access to the Site and a reasonable opportunity for the introduction and storage of materials and equipment and the execution of such other work and shall properly coordinate the Work with theirs. Unless otherwise provided in the Contract Documents, CONTRACTOR shall do all cutting, fitting, and patching of the Work that may be required to properly connect or otherwise make its several parts come together and properly integrate with such other work. CONTRACTOR shall not endanger any work of others by cutting, excavating, or otherwise altering their work and will only cut or alter their work with the written consent of ENGINEER and the others whose work will be affected. The duties and responsibilities of CONTRACTOR under this paragraph are for the benefit of such utility owners and other contractors to the extent that there are comparable provisions for the benefit of CONTRACTOR in said direct contracts between OWNER and such utility owners and other contractors.

C. If the proper execution or results of any part of CONTRACTOR's Work depends upon work performed by others under this Article 7, CONTRACTOR shall inspect such other work and promptly report to ENGINEER in writing any delays, defects, or deficiencies in such other work that render it unavailable or unsuitable for the proper execution and results of CONTRACTOR's Work. CONTRACTOR's failure to so report will constitute an acceptance of such other work as fit and proper for

integration with CONTRACTOR's Work except for latent defects and deficiencies in such other work.

7.02 *Coordination*

A. If OWNER intends to contract with others for the performance of other work on the Project at the Site, the following will be set forth in Supplementary Conditions:

1. the individual or entity who will have authority and responsibility for coordination of the activities among the various contractors will be identified;

2. the specific matters to be covered by such authority and responsibility will be itemized; and

3. the extent of such authority and responsibilities will be provided.

B. Unless otherwise provided in the Supplementary Conditions, OWNER shall have sole authority and responsibility for such coordination.

ARTICLE 8 - OWNER'S RESPONSIBILITIES

8.01 *Communications to Contractor*

A. Except as otherwise provided in these General Conditions, OWNER shall issue all communications to CONTRACTOR through ENGINEER.

8.02 *Replacement of ENGINEER*

A. In case of termination of the employment of ENGINEER, OWNER shall appoint an engineer to whom CONTRACTOR makes no reasonable objection, whose status under the Contract Documents shall be that of the former ENGINEER.

8.03 *Furnish Data*

A. OWNER shall promptly furnish the data required of OWNER under the Contract Documents.

8.04 *Pay Promptly When Due*

A. OWNER shall make payments to CONTRACTOR promptly when they are due as provided in paragraphs 14.02.C and 14.07.C.

8.05 *Lands and Easements; Reports and Tests*

A. OWNER's duties in respect of providing lands and easements and providing engineering surveys to establish reference points are set forth in paragraphs 4.01 and 4.05. Paragraph 4.02 refers to OWNER's identifying and making available to CONTRACTOR copies of reports of explorations and tests of subsurface conditions and drawings of physical conditions in or relating to existing surface or subsurface structures at or contiguous to the Site that have been utilized by ENGINEER in preparing the Contract Documents.

8.06 *Insurance*

A. OWNER's responsibilities, if any, in respect to purchasing and maintaining liability and property insurance are set forth in Article 5.

8.07 *Change Orders*

A. OWNER is obligated to execute Change Orders as indicated in paragraph 10.03.

8.08 *Inspections, Tests, and Approvals*

A. OWNER's responsibility in respect to certain inspections, tests, and approvals is set forth in paragraph 13.03.B.

8.09 *Limitations on OWNER's Responsibilities*

A. The OWNER shall not supervise, direct, or have control or authority over, nor be responsible for, CONTRACTOR's means, methods, techniques, sequences, or procedures of construction, or the safety precautions and programs incident thereto, or for any failure of CONTRACTOR to comply with Laws and Regulations applicable to the performance of the Work. OWNER will not be responsible for CONTRACTOR's failure to perform the Work in accordance with the Contract Documents.

8.10 *Undisclosed Hazardous Environmental Condition*

A. OWNER's responsibility in respect to an undisclosed Hazardous Environmental Condition is set forth in paragraph 4.06.

8.11 *Evidence of Financial Arrangements*

A. If and to the extent OWNER has agreed to furnish CONTRACTOR reasonable evidence that financial arrangements have been made to satisfy OWNER's obligations under the Contract Documents, OWNER's responsibility in respect thereof will be as set forth in the Supplementary Conditions.

ARTICLE 9 - ENGINEER'S STATUS DURING CONSTRUCTION

9.01 *OWNER'S Representative*

A. ENGINEER will be OWNER's representative during the construction period. The duties and responsibilities and the limitations of authority of ENGINEER as OWNER's representative during construction are set forth in the Contract Documents and will not be changed without written consent of OWNER and ENGINEER.

9.02 *Visits to Site*

A. ENGINEER will make visits to the Site at intervals appropriate to the various stages of construction as ENGINEER deems necessary in order to observe as an experienced and qualified design professional the progress that has been made and the quality of the various aspects of CONTRACTOR's executed Work. Based on information obtained during such visits and observations, ENGINEER, for the benefit of OWNER, will determine, in general, if the Work is proceeding in accordance with the Contract Documents. ENGINEER will not be required to make exhaustive or continuous inspections on the Site to check the quality or quantity of the Work. ENGINEER's efforts will be directed toward providing for OWNER a greater degree of confidence that the completed Work will conform generally to the Contract Documents. On the basis of such visits and observations, ENGINEER will keep OWNER informed of the progress of the Work and will endeavor to guard OWNER against defective Work.

B. ENGINEER's visits and observations are subject to all the limitations on ENGINEER's authority and responsibility set forth in paragraph 9.10, and particularly, but without limitation, during or as a result of ENGINEER's visits or observations of CONTRACTOR's Work ENGINEER will not supervise, direct, control, or have authority over or be responsible for CONTRACTOR's means, methods, techniques, sequences, or procedures of construction, or the safety precautions and programs incident thereto, or for any failure of CONTRACTOR to comply with Laws and Regulations applicable to the performance of the Work.

9.03 *Project Representative*

A. If OWNER and ENGINEER agree, ENGINEER will furnish a Resident Project Representative to assist ENGINEER in providing more extensive observation of the Work. The responsibilities and authority and limitations thereon of any such Resident Project Representative and assistants will be as provided in paragraph 9.10 and in the Supplementary Conditions. If OWNER designates another representative or agent to represent OWNER at the Site who is not ENGINEER's Consultant, agent or employee, the responsibilities and authority and limitations thereon of such other individual or entity will be as provided in the Supplementary Conditions.

9.04 *Clarifications and Interpretations*

A. ENGINEER will issue with reasonable promptness such written clarifications or interpretations of the requirements of the Contract Documents as ENGINEER may determine necessary, which shall be consistent with the intent of and reasonably inferable from the Contract Documents. Such written clarifications and interpretations will be binding on OWNER and CONTRACTOR. If OWNER and CONTRACTOR are unable to agree on entitlement to or on the amount or extent, if any, of any adjustment in the Contract Price or Contract Times, or both, that should be allowed as a result of a written clarification or interpretation, a Claim may be made therefor as provided in paragraph 10.05.

9.05 *Authorized Variations in Work*

A. ENGINEER may authorize minor variations in the Work from the requirements of the Contract Documents which do not involve an adjustment in the Contract Price or the Contract Times and are compatible with the design concept of the completed Project as a functioning whole as indicated by the Contract Documents. These may be accomplished by a Field Order and will be binding on OWNER and also on CONTRACTOR, who shall perform the Work involved promptly. If OWNER and CONTRACTOR are unable to agree on entitlement to or on the amount or extent, if any, of any adjustment in the Contract Price or Contract Times, or both, as a result of a Field Order, a Claim may be made therefor as provided in paragraph 10.05.

9.06 *Rejecting Defective Work*

A. ENGINEER will have authority to disapprove or reject Work which ENGINEER believes to be defective, or that ENGINEER believes will not produce a completed Project that conforms to the Contract Documents or that will prejudice the integrity of the design concept of the completed Project as a functioning whole as indicated by the Contract Documents. ENGINEER will also have authority to require special inspection or testing of the Work as provided in paragraph 13.04, whether or not the Work is fabricated, installed, or completed.

9.07 *Shop Drawings, Change Orders and Payments*

A. In connection with ENGINEER's authority as to Shop Drawings and Samples, see paragraph 6.17.

B. In connection with ENGINEER's authority as to Change Orders, see Articles 10, 11, and 12.

C. In connection with ENGINEER's authority as to Applications for Payment, see Article 14.

9.08 *Determinations for Unit Price Work*

A. ENGINEER will determine the actual quantities and classifications of Unit Price Work performed by CONTRACTOR. ENGINEER will review with CONTRACTOR the ENGINEER's preliminary determinations on such matters before rendering a written decision thereon (by recommendation of an Application for Payment or otherwise). ENGINEER's written decision thereon will be final and binding (except as modified by ENGINEER to reflect changed factual conditions or more accurate data) upon OWNER and CONTRACTOR, subject to the provisions of paragraph 10.05.

9.09 *Decisions on Requirements of Contract Documents and Acceptability of Work*

A. ENGINEER will be the initial interpreter of the requirements of the Contract Documents and judge of the acceptability of the Work thereunder. Claims, disputes and other matters relating to the acceptability of the Work, the quantities and classifications of Unit Price Work, the interpretation of the requirements of the Contract Documents pertaining to the performance of the Work, and Claims seeking changes in the Contract Price or Contract Times will be referred initially to ENGINEER in writing, in accordance with the provisions of paragraph 10.05, with a request for a formal decision.

B. When functioning as interpreter and judge under this paragraph 9.09, ENGINEER will not show partiality to OWNER or CONTRACTOR and will not be liable in connection with any interpretation or decision rendered in good faith in such capacity. The rendering of a decision by ENGINEER pursuant to this paragraph 9.09 with respect to any such Claim, dispute, or other matter (except any which have been waived by the making or acceptance of final payment as provided in paragraph 14.07) will be a condition precedent to any exercise by OWNER or CONTRACTOR of such rights or remedies as either may otherwise have under the Contract Documents or by Laws or Regulations in respect of any such Claim, dispute, or other matter.

9.10 *Limitations on ENGINEER's Authority and Responsibilities*

A. Neither ENGINEER's authority or responsibility under this Article 9 or under any other provision of the Contract Documents nor any decision made by ENGINEER in good faith either to exercise or not exercise such authority or responsibility or the undertaking, exercise, or performance of any authority or responsibility by ENGINEER shall create, impose, or give rise to any duty in contract, tort, or otherwise owed by ENGINEER to CONTRACTOR, any Subcontractor, any Supplier, any other individual or entity, or to any surety for or employee or agent of any of them.

B. ENGINEER will not supervise, direct, control, or have authority over or be responsible for CONTRACTOR's means, methods, techniques, sequences, or procedures of construction, or the safety precautions and programs incident thereto, or for any failure of CONTRACTOR to comply with Laws and Regulations applicable to the performance of the Work. ENGINEER will not be responsible for CONTRACTOR's failure to perform the Work in accordance with the Contract Documents.

C. ENGINEER will not be responsible for the acts or omissions of CONTRACTOR or of any Subcontractor, any Supplier, or of any other individual or entity performing any of the Work.

D. ENGINEER's review of the final Application for Payment and accompanying documentation and all maintenance and operating instructions, schedules, guarantees, Bonds, certificates of inspection, tests and approvals, and other documentation required to be delivered by paragraph 14.07.A will only be to determine generally that their content complies with the requirements of, and in the case of certificates of inspections, tests, and approvals that the results certified indicate compliance with, the Contract Documents.

E. The limitations upon authority and responsibility set forth in this paragraph 9.10 shall also apply to ENGINEER's Consultants, Resident Project Representative, and assistants.

ARTICLE 10 - CHANGES IN THE WORK; CLAIMS

10.01 *Authorized Changes in the Work*

A. Without invalidating the Agreement and without notice to any surety, OWNER may, at any time or from time to time, order additions, deletions, or revisions in the Work by a Written Amendment, a Change Order, or a Work Change Directive. Upon receipt of any such document, CONTRACTOR shall promptly proceed with the Work involved which will be performed under the applicable conditions of the Contract Documents (except as otherwise specifically provided).

B. If OWNER and CONTRACTOR are unable to agree on entitlement to, or on the amount or extent, if any, of an adjustment in the Contract Price or Contract Times, or both, that should be allowed as a result of a Work Change

Directive, a Claim may be made therefor as provided in paragraph 10.05.

10.02 *Unauthorized Changes in the Work*

A. CONTRACTOR shall not be entitled to an increase in the Contract Price or an extension of the Contract Times with respect to any work performed that is not required by the Contract Documents as amended, modified, or supplemented as provided in paragraph 3.04, except in the case of an emergency as provided in paragraph 6.16 or in the case of uncovering Work as provided in paragraph 13.04.B.

10.03 *Execution of Change Orders*

A. OWNER and CONTRACTOR shall execute appropriate Change Orders recommended by ENGINEER (or Written Amendments) covering:

1. changes in the Work which are: (i) ordered by OWNER pursuant to paragraph 10.01.A, (ii) required because of acceptance of defective Work under paragraph 13.08.A or OWNER's correction of defective Work under paragraph 13.09, or (iii) agreed to by the parties;

2. changes in the Contract Price or Contract Times which are agreed to by the parties, including any undisputed sum or amount of time for Work actually performed in accordance with a Work Change Directive; and

3. changes in the Contract Price or Contract Times which embody the substance of any written decision rendered by ENGINEER pursuant to paragraph 10.05; provided that, in lieu of executing any such Change Order, an appeal may be taken from any such decision in accordance with the provisions of the Contract Documents and applicable Laws and Regulations, but during any such appeal, CONTRACTOR shall carry on the Work and adhere to the progress schedule as provided in paragraph 6.18.A.

10.04 *Notification to Surety*

A. If notice of any change affecting the general scope of the Work or the provisions of the Contract Documents (including, but not limited to, Contract Price or Contract Times) is required by the provisions of any Bond to be given to a surety, the giving of any such notice will be CONTRACTOR's responsibility. The amount of each applicable Bond will be adjusted to reflect the effect of any such change.

10.05 *Claims and Disputes*

A. *Notice:* Written notice stating the general nature of each Claim, dispute, or other matter shall be delivered by the claimant to ENGINEER and the other party to the Contract promptly (but in no event later than 30 days) after the start of the event giving rise thereto. Notice of the amount or extent of the Claim, dispute, or other matter with supporting data shall be delivered to the ENGINEER and the other party to the Contract within 60 days after the start of such event (unless ENGINEER allows additional time for claimant to submit additional or more accurate data in support of such Claim, dispute, or other matter). A Claim for an adjustment in Contract Price shall be prepared in accordance with the provisions of paragraph 12.01.B. A Claim for an adjustment in Contract Time shall be prepared in accordance with the provisions of paragraph 12.02.B. Each Claim shall be accompanied by claimant's written statement that the adjustment claimed is the entire adjustment to which the claimant believes it is entitled as a result of said event. The opposing party shall submit any response to ENGINEER and the claimant within 30 days after receipt of the claimant's last submittal (unless ENGINEER allows additional time).

B. *ENGINEER's Decision:* ENGINEER will render a formal decision in writing within 30 days after receipt of the last submittal of the claimant or the last submittal of the opposing party, if any. ENGINEER's written decision on such Claim, dispute, or other matter will be final and binding upon OWNER and CONTRACTOR unless:

1. an appeal from ENGINEER's decision is taken within the time limits and in accordance with the dispute resolution procedures set forth in Article 16; or

2. if no such dispute resolution procedures have been set forth in Article 16, a written notice of intention to appeal from ENGINEER's written decision is delivered by OWNER or CONTRACTOR to the other and to ENGINEER within 30 days after the date of such decision, and a formal proceeding is instituted by the appealing party in a forum of competent jurisdiction within 60 days after the date of such decision or within 60 days after Substantial Completion, whichever is later (unless otherwise agreed in writing by OWNER and CONTRACTOR), to exercise such rights or remedies as the appealing party may have with respect to such Claim, dispute, or other matter in accordance with applicable Laws and Regulations.

C. If ENGINEER does not render a formal decision in writing within the time stated in paragraph 10.05.B, a decision denying the Claim in its entirety shall be deemed to have been issued 31 days after receipt of the last submittal

of the claimant or the last submittal of the opposing party, if any.

D. No Claim for an adjustment in Contract Price or Contract Times (or Milestones) will be valid if not submitted in accordance with this paragraph 10.05.

ARTICLE 11 - COST OF THE WORK; CASH ALLOWANCES; UNIT PRICE WORK

11.01 *Cost of the Work*

A. *Costs Included:* The term Cost of the Work means the sum of all costs necessarily incurred and paid by CONTRACTOR in the proper performance of the Work. When the value of any Work covered by a Change Order or when a Claim for an adjustment in Contract Price is determined on the basis of Cost of the Work, the costs to be reimbursed to CONTRACTOR will be only those additional or incremental costs required because of the change in the Work or because of the event giving rise to the Claim. Except as otherwise may be agreed to in writing by OWNER, such costs shall be in amounts no higher than those prevailing in the locality of the Project, shall include only the following items, and shall not include any of the costs itemized in paragraph 11.01.B.

1. Payroll costs for employees in the direct employ of CONTRACTOR in the performance of the Work under schedules of job classifications agreed upon by OWNER and CONTRACTOR. Such employees shall include without limitation superintendents, foremen, and other personnel employed full time at the Site. Payroll costs for employees not employed full time on the Work shall be apportioned on the basis of their time spent on the Work. Payroll costs shall include, but not be limited to, salaries and wages plus the cost of fringe benefits, which shall include social security contributions, unemployment, excise, and payroll taxes, workers' compensation, health and retirement benefits, bonuses, sick leave, vacation and holiday pay applicable thereto. The expenses of performing Work outside of regular working hours, on Saturday, Sunday, or legal holidays, shall be included in the above to the extent authorized by OWNER.

2. Cost of all materials and equipment furnished and incorporated in the Work, including costs of transportation and storage thereof, and Suppliers' field services required in connection therewith. All cash discounts shall accrue to CONTRACTOR unless OWNER deposits funds with CONTRACTOR with which to make payments, in which case the cash discounts shall accrue to OWNER. All trade discounts, rebates and refunds and returns from sale of surplus materials and equipment shall accrue to OWNER, and CONTRACTOR shall make provisions so that they may be obtained.

3. Payments made by CONTRACTOR to Subcontractors for Work performed by Subcontractors. If required by OWNER, CONTRACTOR shall obtain competitive bids from subcontractors acceptable to OWNER and CONTRACTOR and shall deliver such bids to OWNER, who will then determine, with the advice of ENGINEER, which bids, if any, will be acceptable. If any subcontract provides that the Subcontractor is to be paid on the basis of Cost of the Work plus a fee, the Subcontractor's Cost of the Work and fee shall be determined in the same manner as CONTRACTOR's Cost of the Work and fee as provided in this paragraph 11.01.

4. Costs of special consultants (including but not limited to engineers, architects, testing laboratories, surveyors, attorneys, and accountants) employed for services specifically related to the Work.

5. Supplemental costs including the following:

a. The proportion of necessary transportation, travel, and subsistence expenses of CONTRACTOR's employees incurred in discharge of duties connected with the Work.

b. Cost, including transportation and maintenance, of all materials, supplies, equipment, machinery, appliances, office, and temporary facilities at the Site, and hand tools not owned by the workers, which are consumed in the performance of the Work, and cost, less market value, of such items used but not consumed which remain the property of CONTRACTOR.

c. Rentals of all construction equipment and machinery, and the parts thereof whether rented from CONTRACTOR or others in accordance with rental agreements approved by OWNER with the advice of ENGINEER, and the costs of transportation, loading, unloading, assembly, dismantling, and removal thereof. All such costs shall be in accordance with the terms of said rental agreements. The rental of any such equipment, machinery, or parts shall cease when the use thereof is no longer necessary for the Work.

d. Sales, consumer, use, and other similar taxes related to the Work, and for which CONTRACTOR is liable, imposed by Laws and Regulations.

e. Deposits lost for causes other than negligence of CONTRACTOR, any Subcontractor, or anyone directly or indirectly employed by any of them or for whose acts any of them may be liable, and royalty payments and fees for permits and licenses.

f. Losses and damages (and related expenses) caused by damage to the Work, not compensated by insurance or otherwise, sustained by CONTRACTOR in connection with the performance of the Work (except losses and damages within the deductible amounts of property insurance established in accordance with paragraph 5.06.D), provided such losses and damages have resulted from causes other than the negligence of CONTRACTOR, any Subcontractor, or anyone directly or indirectly employed by any of them or for whose acts any of them may be liable. Such losses shall include settlements made with the written consent and approval of OWNER. No such losses, damages, and expenses shall be included in the Cost of the Work for the purpose of determining CONTRACTOR's fee.

g. The cost of utilities, fuel, and sanitary facilities at the Site.

h. Minor expenses such as telegrams, long distance telephone calls, telephone service at the Site, expressage, and similar petty cash items in connection with the Work.

i. When the Cost of the Work is used to determine the value of a Change Order or of a Claim, the cost of premiums for additional Bonds and insurance required because of the changes in the Work or caused by the event giving rise to the Claim.

j. When all the Work is performed on the basis of cost-plus, the costs of premiums for all Bonds and insurance CONTRACTOR is required by the Contract Documents to purchase and maintain.

B. *Costs Excluded:* The term Cost of the Work shall not include any of the following items:

1. Payroll costs and other compensation of CONTRACTOR's officers, executives, principals (of partnerships and sole proprietorships), general managers, engineers, architects, estimators, attorneys, auditors, accountants, purchasing and contracting agents, expediters, timekeepers, clerks, and other personnel employed by CONTRACTOR, whether at the Site or in CONTRACTOR's principal or branch office for general administration of the Work and not specifically included in the agreed upon schedule of job classifications referred to in paragraph 11.01.A.1 or specifically covered by paragraph 11.01.A.4, all of which are to be considered administrative costs covered by the CONTRACTOR's fee.

2. Expenses of CONTRACTOR's principal and branch offices other than CONTRACTOR's office at the Site.

3. Any part of CONTRACTOR's capital expenses, including interest on CONTRACTOR's capital employed for the Work and charges against CONTRACTOR for delinquent payments.

4. Costs due to the negligence of CONTRACTOR, any Subcontractor, or anyone directly or indirectly employed by any of them or for whose acts any of them may be liable, including but not limited to, the correction of defective Work, disposal of materials or equipment wrongly supplied, and making good any damage to property.

5. Other overhead or general expense costs of any kind and the costs of any item not specifically and expressly included in paragraphs 11.01.A and 11.01.B.

C. *CONTRACTOR's Fee:* When all the Work is performed on the basis of cost-plus, CONTRACTOR's fee shall be determined as set forth in the Agreement. When the value of any Work covered by a Change Order or when a Claim for an adjustment in Contract Price is determined on the basis of Cost of the Work, CONTRACTOR's fee shall be determined as set forth in paragraph 12.01.C.

D. *Documentation:* Whenever the Cost of the Work for any purpose is to be determined pursuant to paragraphs 11.01.A and 11.01.B, CONTRACTOR will establish and maintain records thereof in accordance with generally accepted accounting practices and submit in a form acceptable to ENGINEER an itemized cost breakdown together with supporting data.

11.02 *Cash Allowances*

A. It is understood that CONTRACTOR has included in the Contract Price all allowances so named in the Contract Documents and shall cause the Work so covered to be performed for such sums as may be acceptable to OWNER and ENGINEER. CONTRACTOR agrees that:

1. the allowances include the cost to CONTRACTOR (less any applicable trade discounts) of materials and equipment required by the allowances to be delivered at the Site, and all applicable taxes; and

2. CONTRACTOR's costs for unloading and handling on the Site, labor, installation costs, overhead, profit, and other expenses contemplated for the allowances have been included in the Contract Price and not in the allowances, and no demand for additional payment on account of any of the foregoing will be valid.

B. Prior to final payment, an appropriate Change Order will be issued as recommended by ENGINEER to reflect actual amounts due CONTRACTOR on account of Work covered by allowances, and the Contract Price shall be correspondingly adjusted.

11.03 *Unit Price Work*

A. Where the Contract Documents provide that all or part of the Work is to be Unit Price Work, initially the Contract Price will be deemed to include for all Unit Price Work an amount equal to the sum of the unit price for each separately identified item of Unit Price Work times the estimated quantity of each item as indicated in the Agreement. The estimated quantities of items of Unit Price Work are not guaranteed and are solely for the purpose of comparison of Bids and determining an initial Contract Price. Determinations of the actual quantities and classifications of Unit Price Work performed by CONTRACTOR will be made by ENGINEER subject to the provisions of paragraph 9.08.

B. Each unit price will be deemed to include an amount considered by CONTRACTOR to be adequate to cover CONTRACTOR's overhead and profit for each separately identified item.

C. OWNER or CONTRACTOR may make a Claim for an adjustment in the Contract Price in accordance with paragraph 10.05 if:

1. the quantity of any item of Unit Price Work performed by CONTRACTOR differs materially and significantly from the estimated quantity of such item indicated in the Agreement; and

2. there is no corresponding adjustment with respect any other item of Work; and

3. if CONTRACTOR believes that CONTRACTOR is entitled to an increase in Contract Price as a result of having incurred additional expense or OWNER believes that OWNER is entitled to a decrease in Contract Price and the parties are unable to agree as to the amount of any such increase or decrease.

ARTICLE 12 - CHANGE OF CONTRACT PRICE; CHANGE OF CONTRACT TIMES

12.01 *Change of Contract Price*

A. The Contract Price may only be changed by a Change Order or by a Written Amendment. Any Claim for an adjustment in the Contract Price shall be based on written notice submitted by the party making the Claim to the ENGINEER and the other party to the Contract in accordance with the provisions of paragraph 10.05.

B. The value of any Work covered by a Change Order or of any Claim for an adjustment in the Contract Price will be determined as follows:

1. where the Work involved is covered by unit prices contained in the Contract Documents, by application of such unit prices to the quantities of the items involved (subject to the provisions of paragraph 11.03); or

2. where the Work involved is not covered by unit prices contained in the Contract Documents, by a mutually agreed lump sum (which may include an allowance for overhead and profit not necessarily in accordance with paragraph 12.01.C.2); or

3. where the Work involved is not covered by unit prices contained in the Contract Documents and agreement to a lump sum is not reached under paragraph 12.01.B.2, on the basis of the Cost of the Work (determined as provided in paragraph 11.01) plus a CONTRACTOR's fee for overhead and profit (determined as provided in paragraph 12.01.C).

C. *CONTRACTOR's Fee:* The CONTRACTOR's fee for overhead and profit shall be determined as follows:

1. a mutually acceptable fixed fee; or

2. if a fixed fee is not agreed upon, then a fee based on the following percentages of the various portions of the Cost of the Work:

a. for costs incurred under paragraphs 11.01.A.1 and 11.01.A.2, the CONTRACTOR's fee shall be 15 percent;

b. for costs incurred under paragraph 11.01.A.3, the CONTRACTOR's fee shall be five percent;

c. where one or more tiers of subcontracts are on the basis of Cost of the Work plus a fee and no fixed fee is agreed upon, the intent of paragraph 12.01.C.2.a is that the Subcontractor who actually performs the Work, at whatever tier, will be paid a fee of 15 percent of the costs incurred by such Subcontractor under paragraphs 11.01.A.1 and 11.01.A.2 and that any higher tier Subcontractor and CONTRACTOR will each be paid a fee of five percent of the amount paid to the next lower tier Subcontractor;

d. no fee shall be payable on the basis of costs itemized under paragraphs 11.01.A.4, 11.01.A.5, and 11.01.B;

e. the amount of credit to be allowed by CONTRACTOR to OWNER for any change which results in a net decrease in cost will be the amount of the actual net decrease in cost plus a deduction in CONTRACTOR's fee by an amount equal to five percent of such net decrease; and

f. when both additions and credits are involved in any one change, the adjustment in CONTRACTOR's fee shall be computed on the basis of the net change in accordance with paragraphs 12.01.C.2.a through 12.01.C.2.e, inclusive.

12.02 *Change of Contract Times*

A. The Contract Times (or Milestones) may only be changed by a Change Order or by a Written Amendment. Any Claim for an adjustment in the Contract Times (or Milestones) shall be based on written notice submitted by the party making the claim to the ENGINEER and the other party to the Contract in accordance with the provisions of paragraph 10.05.

B. Any adjustment of the Contract Times (or Milestones) covered by a Change Order or of any Claim for an adjustment in the Contract Times (or Milestones) will be determined in accordance with the provisions of this Article 12.

12.03 *Delays Beyond CONTRACTOR's Control*

A. Where CONTRACTOR is prevented from completing any part of the Work within the Contract Times (or Milestones) due to delay beyond the control of CONTRACTOR, the Contract Times (or Milestones) will be extended in an amount equal to the time lost due to such delay if a Claim is made therefor as provided in paragraph 12.02.A. Delays beyond the control of CONTRACTOR shall include, but not be limited to, acts or neglect by OWNER, acts or neglect of utility owners or other contractors performing other work as contemplated by Article 7, fires, floods, epidemics, abnormal weather conditions, or acts of God.

12.04 *Delays Within CONTRACTOR's Control*

A. The Contract Times (or Milestones) will not be extended due to delays within the control of CONTRACTOR. Delays attributable to and within the control of a Subcontractor or Supplier shall be deemed to be delays within the control of CONTRACTOR.

12.05 *Delays Beyond OWNER's and CONTRACTOR's Control*

A. Where CONTRACTOR is prevented from completing any part of the Work within the Contract Times (or Milestones) due to delay beyond the control of both OWNER and CONTRACTOR, an extension of the Contract Times (or Milestones) in an amount equal to the time lost due to such delay shall be CONTRACTOR's sole and exclusive remedy for such delay.

12.06 *Delay Damages*

A. In no event shall OWNER or ENGINEER be liable to CONTRACTOR, any Subcontractor, any Supplier, or any other person or organization, or to any surety for or employee or agent of any of them, for damages arising out of or resulting from:

1. delays caused by or within the control of CONTRACTOR; or

2. delays beyond the control of both OWNER and CONTRACTOR including but not limited to fires, floods, epidemics, abnormal weather conditions, acts of God, or acts or neglect by utility owners or other contractors performing other work as contemplated by Article 7.

B. Nothing in this paragraph 12.06 bars a change in Contract Price pursuant to this Article 12 to compensate CONTRACTOR due to delay, interference, or disruption directly attributable to actions or inactions of OWNER or anyone for whom OWNER is responsible.

ARTICLE 13 - TESTS AND INSPECTIONS; CORRECTION, REMOVAL OR ACCEPTANCE OF DEFECTIVE WORK

13.01 *Notice of Defects*

A. Prompt notice of all defective Work of which OWNER or ENGINEER has actual knowledge will be given to CONTRACTOR. All defective Work may be rejected, corrected, or accepted as provided in this Article 13.

13.02 *Access to Work*

A. OWNER, ENGINEER, ENGINEER's Consultants, other representatives and personnel of OWNER, independent testing laboratories, and governmental agencies with jurisdictional interests will have access to the Site and the Work at reasonable times for their observation, inspecting, and testing. CONTRACTOR shall provide them proper and safe conditions for such access and advise them of CONTRACTOR's Site safety procedures and programs so that they may comply therewith as applicable.

13.03 *Tests and Inspections*

A. CONTRACTOR shall give ENGINEER timely notice of readiness of the Work for all required inspections, tests, or approvals and shall cooperate with inspection and testing personnel to facilitate required inspections or tests.

B. OWNER shall employ and pay for the services of an independent testing laboratory to perform all inspections, tests, or approvals required by the Contract Documents except:

1. for inspections, tests, or approvals covered by paragraphs 13.03.C and 13.03.D below;

2. that costs incurred in connection with tests or inspections conducted pursuant to paragraph 13.04.B shall be paid as provided in said paragraph 13.04.B; and

3. as otherwise specifically provided in the Contract Documents.

C. If Laws or Regulations of any public body having jurisdiction require any Work (or part thereof) specifically to be inspected, tested, or approved by an employee or other representative of such public body, CONTRACTOR shall assume full responsibility for arranging and obtaining such inspections, tests, or approvals, pay all costs in connection therewith, and furnish ENGINEER the required certificates of inspection or approval.

D. CONTRACTOR shall be responsible for arranging and obtaining and shall pay all costs in connection with any inspections, tests, or approvals required for OWNER's and ENGINEER's acceptance of materials or equipment to be incorporated in the Work; or acceptance of materials, mix designs, or equipment submitted for approval prior to CONTRACTOR's purchase thereof for incorporation in the Work. Such inspections, tests, or approvals shall be performed by organizations acceptable to OWNER and ENGINEER.

E. If any Work (or the work of others) that is to be inspected, tested, or approved is covered by CONTRACTOR without written concurrence of ENGINEER, it must, if requested by ENGINEER, be uncovered for observation.

F. Uncovering Work as provided in paragraph 13.03.E shall be at CONTRACTOR's expense unless CONTRACTOR has given ENGINEER timely notice of CONTRACTOR's intention to cover the same and ENGINEER has not acted with reasonable promptness in response to such notice.

13.04 *Uncovering Work*

A. If any Work is covered contrary to the written request of ENGINEER, it must, if requested by ENGINEER, be uncovered for ENGINEER's observation and replaced at CONTRACTOR's expense.

B. If ENGINEER considers it necessary or advisable that covered Work be observed by ENGINEER or inspected or tested by others, CONTRACTOR, at ENGINEER's request, shall uncover, expose, or otherwise make available for observation, inspection, or testing as ENGINEER may require, that portion of the Work in question, furnishing all necessary labor, material, and equipment. If it is found that such Work is defective, CONTRACTOR shall pay all Claims, costs, losses, and damages (including but not limited to all fees and charges of engineers, architects, attorneys, and other professionals and all court or arbitration or other dispute resolution costs) arising out of or relating to such uncovering, exposure, observation, inspection, and testing, and of satisfactory replacement or reconstruction (including but not limited to all costs of repair or replacement of work of others); and OWNER shall be entitled to an appropriate decrease in the Contract Price. If the parties are unable to agree as to the amount thereof, OWNER may make a Claim therefor as provided in paragraph 10.05. If, however, such Work is not found to be defective, CONTRACTOR shall be allowed an increase in the Contract Price or an extension of the Contract Times (or Milestones), or both, directly attributable to such uncovering, exposure, observation, inspection, testing, replacement, and reconstruction. If the

parties are unable to agree as to the amount or extent thereof, CONTRACTOR may make a Claim therefor as provided in paragraph 10.05.

13.05 *OWNER May Stop the Work*

A. If the Work is defective, or CONTRACTOR fails to supply sufficient skilled workers or suitable materials or equipment, or fails to perform the Work in such a way that the completed Work will conform to the Contract Documents, OWNER may order CONTRACTOR to stop the Work, or any portion thereof, until the cause for such order has been eliminated; however, this right of OWNER to stop the Work shall not give rise to any duty on the part of OWNER to exercise this right for the benefit of CONTRACTOR, any Subcontractor, any Supplier, any other individual or entity, or any surety for, or employee or agent of any of them.

13.06 *Correction or Removal of Defective Work*

A. CONTRACTOR shall correct all defective Work, whether or not fabricated, installed, or completed, or, if the Work has been rejected by ENGINEER, remove it from the Project and replace it with Work that is not defective. CONTRACTOR shall pay all Claims, costs, losses, and damages (including but not limited to all fees and charges of engineers, architects, attorneys, and other professionals and all court or arbitration or other dispute resolution costs) arising out of or relating to such correction or removal (including but not limited to all costs of repair or replacement of work of others).

13.07 *Correction Period*

A. If within one year after the date of Substantial Completion or such longer period of time as may be prescribed by Laws or Regulations or by the terms of any applicable special guarantee required by the Contract Documents or by any specific provision of the Contract Documents, any Work is found to be defective, or if the repair of any damages to the land or areas made available for CONTRACTOR's use by OWNER or permitted by Laws and Regulations as contemplated in paragraph 6.11.A is found to be defective, CONTRACTOR shall promptly, without cost to OWNER and in accordance with OWNER's written instructions: (i) repair such defective land or areas, or (ii) correct such defective Work or, if the defective Work has been rejected by OWNER, remove it from the Project and replace it with Work that is not defective, and (iii) satisfactorily correct or repair or remove and replace any damage to other Work, to the work of others or other land or areas resulting therefrom. If CONTRACTOR does not promptly comply with the terms of such instructions, or in an emergency where delay would cause serious risk of loss or damage, OWNER may have the defective Work corrected or repaired or may have the rejected Work removed and replaced, and all Claims, costs, losses, and damages (including but not limited to all fees and charges of engineers, architects, attorneys, and other professionals and all court or arbitration or other dispute resolution costs) arising out of or relating to such correction or repair or such removal and replacement (including but not limited to all costs of repair or replacement of work of others) will be paid by CONTRACTOR.

B. In special circumstances where a particular item of equipment is placed in continuous service before Substantial Completion of all the Work, the correction period for that item may start to run from an earlier date if so provided in the Specifications or by Written Amendment.

C. Where defective Work (and damage to other Work resulting therefrom) has been corrected or removed and replaced under this paragraph 13.07, the correction period hereunder with respect to such Work will be extended for an additional period of one year after such correction or removal and replacement has been satisfactorily completed.

D. CONTRACTOR's obligations under this paragraph 13.07 are in addition to any other obligation or warranty. The provisions of this paragraph 13.07 shall not be construed as a substitute for or a waiver of the provisions of any applicable statute of limitation or repose.

13.08 *Acceptance of Defective Work*

A. If, instead of requiring correction or removal and replacement of defective Work, OWNER (and, prior to ENGINEER's recommendation of final payment, ENGINEER) prefers to accept it, OWNER may do so. CONTRACTOR shall pay all Claims, costs, losses, and damages (including but not limited to all fees and charges of engineers, architects, attorneys, and other professionals and all court or arbitration or other dispute resolution costs) attributable to OWNER's evaluation of and determination to accept such defective Work (such costs to be approved by ENGINEER as to reasonableness) and the diminished value of the Work to the extent not otherwise paid by CONTRACTOR pursuant to this sentence. If any such acceptance occurs prior to ENGINEER's recommendation of final payment, a Change Order will be issued incorporating the necessary revisions in the Contract Documents with respect to the Work, and OWNER shall be entitled to an appropriate decrease in the Contract Price, reflecting the diminished value of Work so accepted. If the parties are unable to agree as to the amount thereof, OWNER may make a Claim therefor as provided in paragraph 10.05. If the acceptance occurs after such recommendation, an appropriate amount will be paid by CONTRACTOR to OWNER.

13.09 *OWNER May Correct Defective Work*

A. If CONTRACTOR fails within a reasonable time after written notice from ENGINEER to correct defective Work or to remove and replace rejected Work as required by ENGINEER in accordance with paragraph 13.06.A, or if CONTRACTOR fails to perform the Work in accordance with the Contract Documents, or if CONTRACTOR fails to comply with any other provision of the Contract Documents, OWNER may, after seven days written notice to CONTRACTOR, correct and remedy any such deficiency.

B. In exercising the rights and remedies under this paragraph, OWNER shall proceed expeditiously. In connection with such corrective and remedial action, OWNER may exclude CONTRACTOR from all or part of the Site, take possession of all or part of the Work and suspend CONTRACTOR's services related thereto, take possession of CONTRACTOR's tools, appliances, construction equipment and machinery at the Site, and incorporate in the Work all materials and equipment stored at the Site or for which OWNER has paid CONTRACTOR but which are stored elsewhere. CONTRACTOR shall allow OWNER, OWNER's representatives, agents and employees, OWNER's other contractors, and ENGINEER and ENGINEER's Consultants access to the Site to enable OWNER to exercise the rights and remedies under this paragraph.

C. All Claims, costs, losses, and damages (including but not limited to all fees and charges of engineers, architects, attorneys, and other professionals and all court or arbitration or other dispute resolution costs) incurred or sustained by OWNER in exercising the rights and remedies under this paragraph 13.09 will be charged against CONTRACTOR, and a Change Order will be issued incorporating the necessary revisions in the Contract Documents with respect to the Work; and OWNER shall be entitled to an appropriate decrease in the Contract Price. If the parties are unable to agree as to the amount of the adjustment, OWNER may make a Claim therefor as provided in paragraph 10.05. Such claims, costs, losses and damages will include but not be limited to all costs of repair, or replacement of work of others destroyed or damaged by correction, removal, or replacement of CONTRACTOR's defective Work.

D. CONTRACTOR shall not be allowed an extension of the Contract Times (or Milestones) because of any delay in the performance of the Work attributable to the exercise by OWNER of OWNER's rights and remedies under this paragraph 13.09.

ARTICLE 14 - PAYMENTS TO CONTRACTOR AND COMPLETION

14.01 *Schedule of Values*

A. The schedule of values established as provided in paragraph 2.07.A will serve as the basis for progress payments and will be incorporated into a form of Application for Payment acceptable to ENGINEER. Progress payments on account of Unit Price Work will be based on the number of units completed.

14.02 *Progress Payments*

A. *Applications for Payments*

1. At least 20 days before the date established for each progress payment (but not more often than once a month), CONTRACTOR shall submit to ENGINEER for review an Application for Payment filled out and signed by CONTRACTOR covering the Work completed as of the date of the Application and accompanied by such supporting documentation as is required by the Contract Documents. If payment is requested on the basis of materials and equipment not incorporated in the Work but delivered and suitably stored at the Site or at another location agreed to in writing, the Application for Payment shall also be accompanied by a bill of sale, invoice, or other documentation warranting that OWNER has received the materials and equipment free and clear of all Liens and evidence that the materials and equipment are covered by appropriate property insurance or other arrangements to protect OWNER's interest therein, all of which must be satisfactory to OWNER.

2. Beginning with the second Application for Payment, each Application shall include an affidavit of CONTRACTOR stating that all previous progress payments received on account of the Work have been applied on account to discharge CONTRACTOR's legitimate obligations associated with prior Applications for Payment.

3. The amount of retainage with respect to pro-gress payments will be as stipulated in the Agreement.

B. *Review of Applications*

1. ENGINEER will, within 10 days after receipt of each Application for Payment, either indicate in writing a recommendation of payment and present the Application to OWNER or return the Application to CONTRACTOR indicating in writing

ENGINEER's reasons for refusing to recommend payment. In the latter case, CONTRACTOR may make the necessary corrections and resubmit the Application.

2. ENGINEER's recommendation of any payment requested in an Application for Payment will constitute a representation by ENGINEER to OWNER, based on ENGINEER's observations on the Site of the executed Work as an experienced and qualified design professional and on ENGINEER's review of the Application for Payment and the accompanying data and schedules, that to the best of ENGINEER's knowledge, information and belief:

a. the Work has progressed to the point indicated;

b. the quality of the Work is generally in accordance with the Contract Documents (subject to an evaluation of the Work as a functioning whole prior to or upon Substantial Completion, to the results of any subsequent tests called for in the Contract Documents, to a final determination of quantities and classifications for Unit Price Work under paragraph 9.08, and to any other qualifications stated in the recommendation); and

c. the conditions precedent to CONTRACTOR's being entitled to such payment appear to have been fulfilled in so far as it is ENGINEER's responsibility to observe the Work.

3. By recommending any such payment ENGINEER will not thereby be deemed to have represented that: (i) inspections made to check the quality or the quantity of the Work as it has been performed have been exhaustive, extended to every aspect of the Work in progress, or involved detailed inspections of the Work beyond the responsibilities specifically assigned to ENGINEER in the Contract Documents; or (ii) that there may not be other matters or issues between the parties that might entitle CONTRACTOR to be paid additionally by OWNER or entitle OWNER to withhold payment to CONTRACTOR.

4. Neither ENGINEER's review of CONTRACTOR's Work for the purposes of recommending payments nor ENGINEER's recommendation of any payment, including final payment, will impose responsibility on ENGINEER to supervise, direct, or control the Work or for the means, methods, techniques, sequences, or procedures of construction, or the safety precautions and programs incident thereto, or for CONTRACTOR's failure to comply with Laws and Regulations applicable to CONTRACTOR's performance of the Work. Additionally, said review or recommendation will not impose responsibility on ENGINEER to make any examination to ascertain how or for what purposes CONTRACTOR has used the moneys paid on account of the Contract Price, or to determine that title to any of the Work, materials, or equipment has passed to OWNER free and clear of any Liens.

5. ENGINEER may refuse to recommend the whole or any part of any payment if, in ENGINEER's opinion, it would be incorrect to make the representations to OWNER referred to in paragraph 14.02.B.2. ENGINEER may also refuse to recommend any such payment or, because of subsequently discovered evidence or the results of subsequent inspections or tests, revise or revoke any such payment recommendation previously made, to such extent as may be necessary in ENGINEER's opinion to protect OWNER from loss because:

a. the Work is defective, or completed Work has been damaged, requiring correction or replacement;

b. the Contract Price has been reduced by Written Amendment or Change Orders;

c. OWNER has been required to correct defective Work or complete Work in accordance with paragraph 13.09; or

d. ENGINEER has actual knowledge of the occurrence of any of the events enumerated in paragraph 15.02.A.

C. *Payment Becomes Due*

1. Ten days after presentation of the Application for Payment to OWNER with ENGINEER's recommendation, the amount recommended will (subject to the provisions of paragraph 14.02.D) become due, and when due will be paid by OWNER to CONTRACTOR.

D. *Reduction in Payment*

1. OWNER may refuse to make payment of the full amount recommended by ENGINEER because:

a. claims have been made against OWNER on account of CONTRACTOR's performance or furnishing of the Work;

b. Liens have been filed in connection with the Work, except where CONTRACTOR has delivered a specific Bond satisfactory to OWNER to secure the satisfaction and discharge of such Liens;

c. there are other items entitling OWNER to a set-off against the amount recommended; or

d. OWNER has actual knowledge of the occurrence of any of the events enumerated in paragraphs 14.02.B.5.a through 14.02.B.5.c or paragraph 15.02.A.

2. If OWNER refuses to make payment of the full amount recommended by ENGINEER, OWNER must give CONTRACTOR immediate written notice (with a copy to ENGINEER) stating the reasons for such action and promptly pay CONTRACTOR any amount remaining after deduction of the amount so withheld. OWNER shall promptly pay CONTRACTOR the amount so withheld, or any adjustment thereto agreed to by OWNER and CONTRACTOR, when CONTRACTOR corrects to OWNER's satisfaction the reasons for such action.

3. If it is subsequently determined that OWNER's refusal of payment was not justified, the amount wrongfully withheld shall be treated as an amount due as determined by paragraph 14.02.C.1.

14.03 *CONTRACTOR's Warranty of Title*

A. CONTRACTOR warrants and guarantees that title to all Work, materials, and equipment covered by any Application for Payment, whether incorporated in the Project or not, will pass to OWNER no later than the time of payment free and clear of all Liens.

14.04 *Substantial Completion*

A. When CONTRACTOR considers the entire Work ready for its intended use CONTRACTOR shall notify OWNER and ENGINEER in writing that the entire Work is substantially complete (except for items specifically listed by CONTRACTOR as incomplete) and request that ENGINEER issue a certificate of Substantial Completion. Promptly thereafter, OWNER, CONTRACTOR, and ENGINEER shall make an inspection of the Work to determine the status of completion. If ENGINEER does not consider the Work substantially complete, ENGINEER will notify CONTRACTOR in writing giving the reasons therefor. If ENGINEER considers the Work substantially complete, ENGINEER will prepare and deliver to OWNER a tentative certificate of Substantial Completion which shall fix the date of Substantial Completion. There shall be attached to the certificate a tentative list of items to be completed or corrected before final payment. OWNER shall have seven days after receipt of the tentative certificate during which to make written objection to ENGINEER as to any provisions of the certificate or attached list. If, after considering such objections, ENGINEER concludes that the Work is not substantially complete, ENGINEER will within 14 days after submission of the tentative certificate to OWNER notify CONTRACTOR in writing, stating the reasons therefor. If, after consideration of OWNER's objections, ENGINEER considers the Work substantially complete, ENGINEER will within said 14 days execute and deliver to OWNER and CONTRACTOR a definitive certificate of Substantial Completion (with a revised tentative list of items to be completed or corrected) reflecting such changes from the tentative certificate as ENGINEER believes justified after consideration of any objections from OWNER. At the time of delivery of the tentative certificate of Substantial Completion ENGINEER will deliver to OWNER and CONTRACTOR a written recommendation as to division of responsibilities pending final payment between OWNER and CONTRACTOR with respect to security, operation, safety, and protection of the Work, maintenance, heat, utilities, insurance, and warranties and guarantees. Unless OWNER and CONTRACTOR agree otherwise in writing and so inform ENGINEER in writing prior to ENGINEER's issuing the definitive certificate of Substantial Completion, ENGINEER's aforesaid recommendation will be binding on OWNER and CONTRACTOR until final payment.

B. OWNER shall have the right to exclude CONTRACTOR from the Site after the date of Substantial Completion, but OWNER shall allow CONTRACTOR reasonable access to complete or correct items on the tentative list.

14.05 *Partial Utilization*

A. Use by OWNER at OWNER's option of any substantially completed part of the Work which has specifically been identified in the Contract Documents, or which OWNER, ENGINEER, and CONTRACTOR agree constitutes a separately functioning and usable part of the Work that can be used by OWNER for its intended purpose without significant interference with CONTRACTOR's performance of the remainder of the Work, may be accomplished prior to Substantial Completion of all the Work subject to the following conditions.

1. OWNER at any time may request CONTRACTOR in writing to permit OWNER to use any such part of the Work which OWNER believes to be ready for its intended use and substantially complete. If CONTRACTOR agrees that such part of the Work is substantially complete,

CONTRACTOR will certify to OWNER and ENGINEER that such part of the Work is substantially complete and request ENGINEER to issue a certificate of Substantial Completion for that part of the Work. CONTRACTOR at any time may notify OWNER and ENGINEER in writing that CONTRACTOR considers any such part of the Work ready for its intended use and substantially complete and request ENGINEER to issue a certificate of Substantial Completion for that part of the Work. Within a reasonable time after either such request, OWNER, CONTRACTOR, and ENGINEER shall make an inspection of that part of the Work to determine its status of completion. If ENGINEER does not consider that part of the Work to be substantially complete, ENGINEER will notify OWNER and CONTRACTOR in writing giving the reasons therefor. If ENGINEER considers that part of the Work to be substantially complete, the provisions of paragraph 14.04 will apply with respect to certification of Substantial Completion of that part of the Work and the division of responsibility in respect thereof and access thereto.

2. No occupancy or separate operation of part of the Work may occur prior to compliance with the requirements of paragraph 5.10 regarding property insurance.

14.06 *Final Inspection*

A. Upon written notice from CONTRACTOR that the entire Work or an agreed portion thereof is complete, ENGINEER will promptly make a final inspection with OWNER and CONTRACTOR and will notify CONTRACTOR in writing of all particulars in which this inspection reveals that the Work is incomplete or defective. CONTRACTOR shall immediately take such measures as are necessary to complete such Work or remedy such deficiencies.

14.07 *Final Payment*

A. *Application for Payment*

1. After CONTRACTOR has, in the opinion of ENGINEER, satisfactorily completed all corrections identified during the final inspection and has delivered, in accordance with the Contract Documents, all maintenance and operating instructions, schedules, guarantees, Bonds, certificates or other evidence of insurance certificates of inspection, marked-up record documents (as provided in paragraph 6.12), and other documents, CONTRACTOR may make application for final payment following the procedure for progress payments.

2. The final Application for Payment shall be accompanied (except as previously delivered) by: (i) all documentation called for in the Contract Documents, including but not limited to the evidence of insurance required by subparagraph 5.04.B.7; (ii) consent of the surety, if any, to final payment; and (iii) complete and legally effective releases or waivers (satisfactory to OWNER) of all Lien rights arising out of or Liens filed in connection with the Work.

3. In lieu of the releases or waivers of Liens specified in paragraph 14.07.A.2 and as approved by OWNER, CONTRACTOR may furnish receipts or releases in full and an affidavit of CONTRACTOR that: (i) the releases and receipts include all labor, services, material, and equipment for which a Lien could be filed; and (ii) all payrolls, material and equipment bills, and other indebtedness connected with the Work for which OWNER or OWNER's property might in any way be responsible have been paid or otherwise satisfied. If any Subcontractor or Supplier fails to furnish such a release or receipt in full, CONTRACTOR may furnish a Bond or other collateral satisfactory to OWNER to indemnify OWNER against any Lien.

B. *Review of Application and Acceptance*

1. If, on the basis of ENGINEER's observation of the Work during construction and final inspection, and ENGINEER's review of the final Application for Payment and accompanying documentation as required by the Contract Documents, ENGINEER is satisfied that the Work has been completed and CONTRACTOR's other obligations under the Contract Documents have been fulfilled, ENGINEER will, within ten days after receipt of the final Application for Payment, indicate in writing ENGINEER's recommendation of payment and present the Application for Payment to OWNER for payment. At the same time ENGINEER will also give written notice to OWNER and CONTRACTOR that the Work is acceptable subject to the provisions of paragraph 14.09. Otherwise, ENGINEER will return the Application for Payment to CONTRACTOR, indicating in writing the reasons for refusing to recommend final payment, in which case CONTRACTOR shall make the necessary corrections and resubmit the Application for Payment.

C. *Payment Becomes Due*

1. Thirty days after the presentation to OWNER of the Application for Payment and accompanying documentation, the amount recommended by ENGINEER will become due and, when due, will be paid by OWNER to CONTRACTOR.

14.08 *Final Completion Delayed*

A. If, through no fault of CONTRACTOR, final completion of the Work is significantly delayed, and if ENGINEER so confirms, OWNER shall, upon receipt of CONTRACTOR's final Application for Payment and recommendation of ENGINEER, and without terminating the Agreement, make payment of the balance due for that portion of the Work fully completed and accepted. If the remaining balance to be held by OWNER for Work not fully completed or corrected is less than the retainage stipulated in the Agreement, and if Bonds have been furnished as required in paragraph 5.01, the written consent of the surety to the payment of the balance due for that portion of the Work fully completed and accepted shall be submitted by CONTRACTOR to ENGINEER with the Application for such payment. Such payment shall be made under the terms and conditions governing final payment, except that it shall not constitute a waiver of Claims.

14.09 *Waiver of Claims*

A. The making and acceptance of final payment will constitute:

1. a waiver of all Claims by OWNER against CONTRACTOR, except Claims arising from unsettled Liens, from defective Work appearing after final inspection pursuant to paragraph 14.06, from failure to comply with the Contract Documents or the terms of any special guarantees specified therein, or from CONTRACTOR's continuing obligations under the Contract Documents; and

2. a waiver of all Claims by CONTRACTOR against OWNER other than those previously made in writing which are still unsettled.

ARTICLE 15 - SUSPENSION OF WORK AND TERMINATION

15.01 *OWNER May Suspend Work*

A. At any time and without cause, OWNER may suspend the Work or any portion thereof for a period of not more than 90 consecutive days by notice in writing to CONTRACTOR and ENGINEER which will fix the date on which Work will be resumed. CONTRACTOR shall resume the Work on the date so fixed. CONTRACTOR shall be allowed an adjustment in the Contract Price or an extension of the Contract Times, or both, directly attributable to any such suspension if CONTRACTOR makes a Claim therefor as provided in paragraph 10.05.

15.02 *OWNER May Terminate for Cause*

A. The occurrence of any one or more of the following events will justify termination for cause:

1. CONTRACTOR's persistent failure to perform the Work in accordance with the Contract Documents (including, but not limited to, failure to supply sufficient skilled workers or suitable materials or equipment or failure to adhere to the progress schedule established under paragraph 2.07 as adjusted from time to time pursuant to paragraph 6.04);

2. CONTRACTOR's disregard of Laws or Regulations of any public body having jurisdiction;

3. CONTRACTOR's disregard of the authority of ENGINEER; or

4. CONTRACTOR's violation in any substantial way of any provisions of the Contract Documents.

B. If one or more of the events identified in paragraph 15.02.A occur, OWNER may, after giving CONTRACTOR (and the surety, if any) seven days written notice, terminate the services of CONTRACTOR, exclude CONTRACTOR from the Site, and take possession of the Work and of all CONTRACTOR's tools, appliances, construction equipment, and machinery at the Site, and use the same to the full extent they could be used by CONTRACTOR (without liability to CONTRACTOR for trespass or conversion), incorporate in the Work all materials and equipment stored at the Site or for which OWNER has paid CONTRACTOR but which are stored elsewhere, and finish the Work as OWNER may deem expedient. In such case, CONTRACTOR shall not be entitled to receive any further payment until the Work is finished. If the unpaid balance of the Contract Price exceeds all claims, costs, losses, and damages (including but not limited to all fees and charges of engineers, architects, attorneys, and other professionals and all court or arbitration or other dispute resolution costs) sustained by OWNER arising out of or relating to completing the Work, such excess will be paid to CONTRACTOR. If such claims, costs, losses, and damages exceed such unpaid balance, CONTRACTOR shall pay the difference to OWNER. Such claims, costs,

losses, and damages incurred by OWNER will be reviewed by ENGINEER as to their reasonableness and, when so approved by ENGINEER, incorporated in a Change Order. When exercising any rights or remedies under this paragraph OWNER shall not be required to obtain the lowest price for the Work performed.

C. Where CONTRACTOR's services have been so terminated by OWNER, the termination will not affect any rights or remedies of OWNER against CONTRACTOR then existing or which may thereafter accrue. Any retention or payment of moneys due CONTRACTOR by OWNER will not release CONTRACTOR from liability.

15.03 *OWNER May Terminate For Convenience*

A. Upon seven days written notice to CONTRACTOR and ENGINEER, OWNER may, without cause and without prejudice to any other right or remedy of OWNER, elect to terminate the Contract. In such case, CONTRACTOR shall be paid (without duplication of any items):

1. for completed and acceptable Work executed in accordance with the Contract Documents prior to the effective date of termination, including fair and reasonable sums for overhead and profit on such Work;

2. for expenses sustained prior to the effective date of termination in performing services and furnishing labor, materials, or equipment as required by the Contract Documents in connection with uncompleted Work, plus fair and reasonable sums for overhead and profit on such expenses;

3. for all claims, costs, losses, and damages (including but not limited to all fees and charges of engineers, architects, attorneys, and other professionals and all court or arbitration or other dispute resolution costs) incurred in settlement of terminated contracts with Subcontractors, Suppliers, and others; and

4. for reasonable expenses directly attributable to termination.

B. CONTRACTOR shall not be paid on account of loss of anticipated profits or revenue or other economic loss arising out of or resulting from such termination.

15.04 *CONTRACTOR May Stop Work or Terminate*

A. If, through no act or fault of CONTRACTOR, the Work is suspended for more than 90 consecutive days by OWNER or under an order of court or other public authority, or ENGINEER fails to act on any Application for Payment within 30 days after it is submitted, or OWNER fails for 30 days to pay CONTRACTOR any sum finally determined to be due, then CONTRACTOR may, upon seven days written notice to OWNER and ENGINEER, and provided OWNER or ENGINEER do not remedy such suspension or failure within that time, terminate the Contract and recover from OWNER payment on the same terms as provided in paragraph 15.03. In lieu of terminating the Contract and without prejudice to any other right or remedy, if ENGINEER has failed to act on an Application for Payment within 30 days after it is submitted, or OWNER has failed for 30 days to pay CONTRACTOR any sum finally determined to be due, CONTRACTOR may, seven days after written notice to OWNER and ENGINEER, stop the Work until payment is made of all such amounts due CONTRACTOR, including interest thereon. The provisions of this paragraph 15.04 are not intended to preclude CONTRACTOR from making a Claim under paragraph 10.05 for an adjustment in Contract Price or Contract Times or otherwise for expenses or damage directly attributable to CONTRACTOR's stopping the Work as permitted by this paragraph.

ARTICLE 16 - DISPUTE RESOLUTION

16.01 *Methods and Procedures*

A. Dispute resolution methods and procedures, if any, shall be as set forth in the Supplementary Conditions. If no method and procedure has been set forth, and subject to the provisions of paragraphs 9.09 and 10.05, OWNER and CONTRACTOR may exercise such rights or remedies as either may otherwise have under the Contract Documents or by Laws or Regulations in respect of any dispute.

ARTICLE 17 - MISCELLANEOUS

17.01 *Giving Notice*

A. Whenever any provision of the Contract Documents requires the giving of written notice, it will be deemed to have been validly given if delivered in person to the individual or to a member of the firm or to an officer of the corporation for whom it is intended, or if delivered at or sent by registered or certified mail, postage prepaid, to the last business address known to the giver of the notice.

17.02 *Computation of Times*

A. When any period of time is referred to in the Contract Documents by days, it will be computed to exclude the first and include the last day of such period. If the last day of any such period falls on a Saturday or Sunday or on a

day made a legal holiday by the law of the applicable jurisdiction, such day will be omitted from the computation.

17.03 *Cumulative Remedies*

A. The duties and obligations imposed by these General Conditions and the rights and remedies available hereunder to the parties hereto are in addition to, and are not to be construed in any way as a limitation of, any rights and remedies available to any or all of them which are otherwise imposed or available by Laws or Regulations, by special warranty or guarantee, or by other provisions of the Contract Documents, and the provisions of this paragraph will be as effective as if repeated specifically in the Contract Documents in connection with each particular duty, obligation, right, and remedy to which they apply.

17.04 *Survival of Obligations*

A. All representations, indemnifications, warranties, and guarantees made in, required by, or given in accordance with the Contract Documents, as well as all continuing obligations indicated in the Contract Documents, will survive final payment, completion, and acceptance of the Work or termination or completion of the Agreement.

17.05 *Controlling Law*

A. This Contract is to be governed by the law of the state in which the Project is located.

SECTION 00800

SUPPLEMENTARY CONDITIONS

SECTION 00800
SUPPLEMENTARY CONDITIONS
TABLE OF CONTENTS

				Page
PART	1.00	GENERAL		00800-1
PART	2.00	SUPPLEMENTARY CONDITIONS		00800-1
	2.01	ARTICLE 1:	DEFINITIONS AND TERMINOLOGY	00800-1
	2.02	ARTICLE 2:	PRELIMINARY MATTERS	00800-2
	2.03	ARTICLE 3:	CONTRACT DOCUMENTS - INTENT, AMENDING AND REUSE	00800-3
	2.04	ARTICLE 4:	AVAILABILITY OF LANDS; SUBSURFACE AND PHYSICAL CONDITIONS; REFERENCE POINTS	00800-3
	2.05	ARTICLE 5:	BONDS AND INSURANCE	00800-4
	2.06	ARTICLE 6:	CONTRACTOR'S RESPONSIBILITIES	00800-11
	2.07	ARTICLE 7:	OTHER WORK	00800-13
	2.08	ARTICLE 8:	OWNER'S RESPONSIBILITIES	00800-14
	2.09	ARTICLE 9:	ENGINEER'S STATUS DURING CONSTRUCTION	00800-15
	2.10	ARTICLE 10:	CHANGES IN THE WORK; CLAIMS	00800-16
	2.11	ARTICLE 11:	COST OF THE WORK; CASH ALLOWANCES; UNIT PRICE WORK	00800-17
	2.12	ARTICLE 12:	CHANGE OF CONTRACT PRICE; CHANGE OF CONTRACT TIMES	00800-17
	2.13	ARTICLE 13:	TESTS AND INSPECTIONS; CORRECTION, REMOVAL OR ACCEPTANCE OF DEFECTIVE WORK	00800-17
	2.14	ARTICLE 14:	PAYMENTS TO THE CONTRACTOR AND COMPLETION	00800-17
	2.15	ARTICLE 15:	SUSPENSION OF WORK AND TERMINATION	00800-20
	2.16	ARTICLE 16:	DISPUTE RESOLUTION	00800-21
	2.17	ARTICLE 17:	MISCELLANEOUS	00800-25
	2.18	ARTICLE 18:	WAGE RATE AND PAYROLL REQUIREMENTS	00800-25
		APPENDICES		

SECTION 00800
SUPPLEMENTARY CONDITIONS

PART 1.00 GENERAL

1.01 These Supplementary Conditions amend and/or supplement the Standard General Conditions of the Construction Contract (EJCDC No. 1910-8, 1996 Edition) and other provisions of the Contract Documents as indicated below. All provisions which are not so amended or supplemented remain in full force and effect.

1.02 The terms used in these Supplementary Conditions will have the meanings indicated in the General Conditions unless otherwise noted below. Additional terms used in these Supplementary Conditions have the meanings indicated below, which are applicable to both the singular and plural thereof.

PART 2.00 SUPPLEMENTARY CONDITIONS

2.01 GENERAL CONDITIONS ARTICLE 1: DEFINITIONS AND TERMINOLOGY

1.01.A.7 Amend the definition of "Bidding Requirements" by adding the following after the words "Instructions to Bidders,": "Information Available to Bidders (if any),".

1.01.A.14 Amend the definition of "Contract Times" by replacing the word "Agreement" in the second line with the words "Contract Documents".

1.01.A.19 Delete the definition for "ENGINEER" and insert the following: The individual or entity named as such either elsewhere in the Contract Documents or by the OWNER at the pre-bid or preconstruction meetings. The OWNER may act in the ENGINEER's capacity at its sole discretion if another individual or entity is not so named, in which case where the word "ENGINEER" is used the word "Owner" may be substituted at the OWNER's sole discretion.

1.01.A.20 Amend the definition for "ENGINEER's Consultant" by deleting the following words from the end of the definition: "... and who is identified as such in the Supplementary Conditions".

1.01.A.28 Amend the definition for "Notice of Award" by adding the following words after the word "therein" in the fourth line: "... or in the Contract Documents".

1.01.A.43 Amend the definition for "Substantial Completion" by deleting the first sentence and replacing it with the following: The date of substantial completion of a project or specified area of a project is the date when construction, in the opinion of the OWNER and ENGINEER, is 100% complete in accordance with the Contract Documents, as may be modified by Change Orders agreed to by the parties, so that the OWNER may occupy the project for the use to which it was intended, with the exception of minor items which may be construed as being beyond the control of the CONTRACTOR. Work items late in completion due to the CONTRACTOR's negligence or lack of foresight will not be considered valid exceptions.

The remainder of the definition shall remain in full force and effect as written.

1.01.A.51 Add the following new definition after 1.01.A.50: *Cover Documents* – certain specific City of Providence documents found at the beginning of the bid documents, usually identifiable by the heading "City of Providence, State of Rhode Island, Board of Contract and Supply", which provide City of Providence terms and requirements for bidding and for the contract. The titles of these documents include, but may not be limited to, "Terms and Requirements for Bidding", "Notice to Vendors", and "Construction and Service Bid Terms".

2.02 GENERAL CONDITIONS ARTICLE 2: PRELIMINARY MATTERS

2.01.A Delete this paragraph in its entirety and replace with the following: The CONTRACTOR shall deliver the required bonds to the OWNER for preparation of Agreement by OWNER within ten (10) calendar days of receipt of Notice of Award.

2.02.A Amend the first sentence of this paragraph by replacing the "ten" with "six".

2.03.A Delete the last two sentences of this paragraph.

2.05.B.4 Add the following as a new paragraph after Paragraph 2.05.B.3: Prepare schedule in a format approved by the OWNER and compatible with the complexity of the project to adequately illustrate the relationship of major work activities. Minimum requirements will include a horizontal bar chart on a monthly time scale, with separate activities conforming to major divisions of the specifications. Projected percentage completion of each

activity and cumulative total of all activities should be shown for the first day of each month throughout the projected contract duration.

2.05.C Amend this paragraph by adding the following after the last sentence: The CONTRACTOR shall file the original and one certified copy of all policies with the OWNER before exposure to loss may occur. If the OWNER is damaged by the failure of the CONTRACTOR to maintain such insurance and to so notify the OWNER, then the CONTRACTOR shall bear all responsible costs properly attributable thereto.

2.06.A Amend this paragraph by deleting the words "Within 20 days after the Contract Times start to run, but".

2.03 GENERAL CONDITIONS ARTICLE 3: CONTRACT DOCUMENTS – INTENT, AMENDING, AND REUSE

3.03.B.2 Add the following as a new paragraph after Paragraph 3.03.B.1.b: In case of a discrepancy between the requirements of the Cover Documents and the requirements stated in other sections of the Contract Documents, the requirements stated within the Cover Documents shall prevail.

3.03.C Add the following new paragraph after Paragraph 3.03.B.2: In cases of conflict as to the type or quality of materials to be supplied, the CONTRACTOR shall provide the best quality of materials, unless otherwise directed by the Owner.

3.04.B Amend the first sentence of this paragraph by inserting the words "specifically submitted for said purpose" after the words "Shop Drawing or Sample".

2.04 GENERAL CONDITIONS ARTICLE 4: AVAILABILITY OF LANDS; SUBSURFACE AND PHYSICAL CONDITIONS; REFERENCE POINTS

4.01.B Delete this Paragraph in its entirety.

4.02.A Amend this paragraph by striking the words "Supplementary Conditions" in the first line and replacing them with the words "Bidding Documents may, if applicable,".

4.02.B Amend the opening paragraph to read as follows:

Limited Reliance by Contractor on Technical Data Authorized: CONTRACTOR may rely upon the general accuracy of the "technical data" contained in such reports and drawings, but such reports and drawings are not Contract Documents. Such "technical data", if any, will be specifically identified and defined in the Bidding Documents if applicable. Except for such reliance on such "technical data" CONTRACTOR may not rely upon or make any Claim against OWNER, ENGINEER, or any of the ENGINEER's Consultants with respect to:.

As so amended, Paragraph 4.02.B remains in full force and effect.

4.03.C.1.c Add the following as a new paragraph after Paragraph 4.03.C.1.b: the provisions of this paragraph are not in conflict with other provisions of the Contract Documents.

4.06.A Amend this paragraph by striking the words "Supplementary Conditions" in the first sentence and replacing them with the words "Bidding Documents".

4.06.B Amend this paragraph by deleting the second sentence, beginning with the word "Such", and replacing it with the following sentence: Such "technical data", if any, will be specifically identified and defined in the Bidding Documents if applicable. As so amended, Paragraph 4.06.B remains in full force and effect.

2.05 GENERAL CONDITIONS ARTICLE 5: BONDS AND INSURANCE

5.01.A Amend this paragraph by adding the following sentences immediately following the existing second sentence and prior to the last sentence: If the contract is for a multiple year period, the OWNER reserves the right to direct the CONTRACTOR to supply bonding for 1-year periods, but such bonds must be renewed prior to expiration during the required period; it is the CONTRACTOR's responsibility to renew such bonds and provide proof of such renewal to the OWNER without notice from the OWNER. Failure to renew such bonds before expiration will result in termination of the contract by the OWNER and liquidated damages my apply.

5.01.B Amend this paragraph by adding the following to the end of the paragraph immediately following the last sentence: Bonds shall be executed by a company licensed to do business in the State of Rhode Island. All out-of-state corporations must add the following language to the original bond: "{*Name of Corporation*}, a {*Name of incorporating State*} corporation, authorized to do business in the State of Rhode Island." A private individual will not be accepted as a surety to provide the required bonds.

5.01.D Add the following as a new paragraph after Paragraph 5.01.C: The reference to the Contract Date on the bond must be left blank. This date will be filled in upon execution of the Contract by the OWNER. The CONTRACTOR must submit all required bonds to the OWNER within 10 days after notification of the award of the Contract. If the required bonds are not submitted to the OWNER by the required date the OWNER may cancel the award of the Contract and award to another bidder. The original and 1 copy of the required bonds must be submitted to Providence Water, 125 Dupont Dr., Providence, Rhode Island 02907, Attn.: Purchasing Dept.. Any costs incurred from obtaining the required bonds shall be solely the responsibility of the CONTRACTOR and shall be included in the price bid, unless a specific line item on the Bidder's Blank provides separately for them as an additional cost or allowance.

5.02.B Add the following new paragraph after Paragraph 5.02.A: Any surety providing bonds or insurance required by the Contract Documents must carry an A.M. Best financial rating of "A" or better.

5.03.A Amend this paragraph by deleting the last sentence in its entirety, beginning with the word "Owner". As so amended, Paragraph 5.03.A remains in full force and effect.

5.03.B Add the following new paragraph after Paragraph 5.03.A: The Contractor shall send the original and one (1) copy of all Certificates of Insurance required by the General and Supplementary Conditions to Providence Water, 125 Dupont Dr., Providence, RI 02907, ATTN: Purchasing Department; these Certificates shall be furnished to the OWNER within 10 days of the Notice of Award of the Contract and will be attached to the final executed copies of the Contract. **The certificates must be completely filled out listing all Insurance Companies, evidence of Coverages and Limits set forth by these Supplementary Conditions, and additional insureds**. The Certificates shall be on the ACORD Form, a sample of which is appended to these Supplementary Conditions.

5.03.C Add the following new paragraph after Paragraph 5.03.B: The OWNER shall be immediately notified by the CONTRACTOR and the insurance company of their termination or cancellation of the policy or coverages, and the protection shall be renewed before further work will be permitted at the site of the Contract. The CONTRACTOR shall not cause any policy or coverage to be canceled or permit them to lapse or be subject to cancellation or a reduction in the required limits of liability or amounts of insurance. Copies of any endorsements that are subsequently issued amending coverages or limits shall be furnished to the OWNER.

5.04.A Amend this paragraph by adding, following the word "maintain" in the first line, the following words: "with a company or companies licensed to do business in the State in which the Project is located".

5.04.B.1 Amend this paragraph by striking the words "Engineer, Engineer's Consultants,"; and also, amend by replacing the words "Supplementary Conditions" with the words "Contract Documents".

5.04.C Add the following as a new paragraph after Paragraph 5.04.B.7: Providence Water requires the following insurance requirements:

1. Worker's Compensation and Occupational Disease Insurance

   Worker's Compensation and Occupational Disease Insurance, in statutory amounts, covering all employees of the CONTRACTOR. Employer's liability coverage with limits of not less than $500,000 each accident or illness shall be included.

2. Commercial General Liability Insurance

   Commercial Liability Insurance with limits of not less than $1,000,000 per occurrence, for bodily injury and/or property damage liability $2,000,000 in the aggregate. Products/completed operation, independent contractors, and contractual liability coverages are to be included. No exclusions for rigging, hoisting, explosions, collapse and/or underground. Completed operations coverage must remain in effect for a period of not less than two (2) years after the completion of the Work. "The City of Providence, Providence Water, its officers and agents are to be named as an additional insured."

3. Automobile Liability Insurance

   When any motor vehicles are used in connection with the work to be performed, the Contractor shall maintain Automobile Liability Insurance with limits of not less than $1,000,000 per occurrence, combined single limit, for bodily injury and property damage. "The City of Providence, Providence Water and its officers and agents are to be named as additionally insured."

4. Professional Liability Insurance

   When any architects, engineers, or consulting firms perform work in connection with any contract, the Contractor shall maintain Professional Liability insurance with limits not less than $2,000,000 per occurrence and aggregate.

5. The insured name must be the same name as the name on the bid submitted.

6. Insurance Certificates should state the Title of Project to be performed. (PLEASE SEE THE SAMPLE APPENDED TO THESE SUPPLEMENTARY CONDITIONS.)

7. Certificate must read that "The City of Providence, Providence Water, its Officers and Agents are named as additional insured."

8. Certificate Holder provision of the certificates must list "The City of Providence and Providence Water."

9. Cancellation and/or reduction in coverage must provide 30 days written notice.

10. The successful bidder must produce a satisfactory Certificate of Insurance within 10 days after award. No work will begin or contract signed unless all these requirements are met. Failure to do so may result in the cancellation of the award and award to another bidder.

    The insurances specified shall be carried until all work required to be performed under the terms of the CONTRACTOR's services are satisfactorily completed and for a period of at least two years after the date when final payment becomes due. Failure to carry or keep such insurance in force shall constitute a violation of the contract, and Providence Water maintains the right to stop work and/or withhold payment until proper evidence is provided.

    The insurance shall provide for 30 days prior written notice to be given to Providence Water in the event coverage is substantially changed, canceled, or not renewed.

    In no case shall the coverage limits stated for Commercial General Liability, Automobile Liability, or Professional Liability insurance stated above be less than the total contract amount. If the total contract amount exceeds any stated limit the limit shall be adjusted to the satisfaction of the OWNER to the next highest $1,000,000 exceeding the total contract amount.

    Providence Water maintains the right to modify, delete, alter or change these requirements.

    The Successful bidder understands and agrees that any insurance protection furnished by the Contractor hereunder shall in no way limit its responsibility to indemnify and save harmless Providence Water.

    For additional information contact the Providence Water Purchasing Department at (401) 521-6300 ext. 7227.

5.06.A Amend this paragraph by deleting the first sentence and replacing it with the following: The CONTRACTOR shall purchase and maintain property insurance (Builders' All-Risk on 100% completed Value Form) upon his entire work at the site to the full insurable replacement value thereof. As so amended, Paragraph 5.06.A remains in full force and effect except as it may be modified elsewhere in the Supplementary Conditions.

5.06.A.2 Amend this paragraph by adding the word "flood," between the words "fire," and "lightning" in the sixth line.

5.06.A.8 Add the following as a new paragraph after Paragraph 5.06.A.7: If this insurance is written with stipulated amounts deductible under the terms of the policy, the CONTRACTOR shall be responsible for and pay the difference attributable to deductions in any payments made by the insurance carrier on claims paid by this insurance.

5.06.B Amend this paragraph by striking the first word "OWNER" and replacing it with "CONTRACTOR". Also, immediately after the words "property insurance as may be" add the words "applicable or". Additionally, replace the words "Supplementary Conditions" with "Contract Documents" in both places where it appears in this paragraph.

5.06.E Delete this paragraph in its entirety and replace with the following: Insurance Covering Special Hazards: Special Hazards, where indicated by the work described in the Contract Documents, shall be covered by Rider or Riders to the Public Liability and/or Property Damage Insurance Policy or policies herein above required to be furnished by the CONTRACTOR as follows:

1. Property Damage Liability rising out of the collapse of or damage to structure due:

    a. To moving, shoring, underpinning, razing or altering of any building or structure, or removal or rebuilding of any structure thereof.

2. Property Damage Liability for:

    a. Injury to or destruction of wires, conduits, pipes, mains, sewers, or other similar property or any apparatus in connection therewith, below the surface of the ground, arising from and during the use of mechanical equipment for the purpose of excavating or drilling within project limits.

    b. Injury to or destruction of property at any time resulting from the above operations.

The CONTRACTOR shall require similar insurance in such amounts to be taken out and maintained by each Subcontractor.

The insurance company shall agree to investigate and defend all claims and suits against the insured for the damages covered, even if groundless, unless the insurance company shall effect settlement.

The cost of such insurance shall be the responsibility of each CONTRACTOR and Subcontractor.

5.07.B Delete this paragraph in its entirety and replace with the following: In waiving rights of recovery under the terms of this paragraph, the term "OWNER" shall be deemed to include his employees, and the OWNER and his employees as the OWNER's representative, as provided in the Contract Documents.

5.07.C Delete this paragraph in its entirety.

5.08.B Amend this paragraph by deleting from the last sentence the words "... and, if required in writing by any party in interest, OWNER as fiduciary shall give bond for the proper performance of such duties".

5.10 Amend this paragraph by adding the following words to begin the second sentence: "At no additional expense to the OWNER,".

5.11 Add the following new paragraph after Paragraph 5.10: Other Data: In the event the form of any policy or certificate for the amounts of insurance or the companies writing same are not satisfactory to the OWNER, the CONTRACTOR shall secure other policies or certificates in form and amount and with companies satisfactory to the OWNER. The CONTRACTOR shall not cause policies to be canceled or permit them to lapse and all insurance policies shall include a clause to the effect that the policy shall not be subject to cancellation or a reduction in the required limits of liability or amounts of insurance until notice has been sent by registered mail to the OWNER, stating when, not less than thirty (30) days thereafter, such cancellation or insurance shall take effect. Such notice shall contain true transcripts from the policy, authenticated by the proper officer of the insurer evidencing in particular those insured, the extent of the insurance, the location and operations to which the insurance applies, the expiration date and the above mentioned notice of cancellation clause. All policies and certificates by the accepted successful bidder shall be delivered to the OWNER immediately before preparation of the construction contracts.

2.06 GENERAL CONDITIONS ARTICLE 6: CONTRACTOR'S RESPONSIBILITIES

6.01.C Add the following as a new paragraph after Paragraph 6.01.B: Prior to work on the project commencing, the CONTRACTOR shall provide the Owner with the name and qualifications of its resident superintendent for the Work. The superintendent shall be permanently assigned to this project and shall be present at all times during the performance of the work. Any proposed replacement superintendent will be subject to the approval of the OWNER. The CONTRACTOR shall provide the OWNER with the qualifications of any superintendent proposed for review.

6.02.B Amend this paragraph by adding the words "the OWNER's" immediately before the words "regular working hours" in the first sentence. Also amend the paragraph by deleting the word "legal" before the word "holiday", and by adding the words "observed by the OWNER" after the word "holiday" in the first sentence.

6.03.B Amend this paragraph by adding the following sentences immediately following the last sentence: All equipment incorporated into the Work shall bear the manufacturers' original identification numbers and nameplates. Manufacturers' identification numbers and nameplates shall not be removed from equipment, and shall be protected from damage during installation and during the performance of any work..

6.03.C Add the following as a new paragraph after Paragraph 6.03.B: Omissions of items from the Drawings and Specifications that are obviously needed to properly perform the work, such as attachments, bolts, hangers, and other fastening devices, shall not relieve the CONTRACTOR from furnishing and installing same to properly perform the required work. It shall be the CONTRACTOR's responsibility to obtain from the ENGINEER all necessary interpretations of the designs, Drawings, and Specifications.

6.04.A.3 Add the following as a new paragraph after Paragraph 6.04.A.2: Submit periodic updates as necessary to reflect any deviations of actual progress from the initial schedule.

6.06.B Amend this paragraph by striking the words "Supplementary Conditions" in two places in the first sentence and replacing them with the words "Contract Document".

6.06.C Amend this paragraph by adding the following sentence at the end of the paragraph: OWNER or ENGINEER may furnish to any such Subcontractor, Supplier, or other individual or entity, to the extent practicable, information about amounts paid to CONTRACTOR on account of work performed for CONTRACTOR by a particular Subcontractor, Supplier, or other individual or entity.

6.08.B Add the following as a new paragraph after Paragraph 6.08.A: The CONTRACTOR shall make himself aware of all laws applicable to the Work pertaining to the licensing of specific trades and securing of related permits. The CONTRACTOR shall be solely responsible to assure that he and all his proposed Subcontractors are in compliance with such laws at the time of the submission of the CONTRACTOR's bid. The CONTRACTOR shall submit to the OWNER any documentation necessary or required to verify such compliance.

6.09.D Add the following as a new paragraph after Paragraph 6.09.C: During the execution of the Work, the CONTRACTOR and each of his subcontractors and any firms with employees performing portions of the Work under these Contract Documents agree not to discriminate against any employee or applicant for employment because of race, color, religion, age, sex, or national origin. The CONTRACTOR shall ensure that applicants are employed, and that employees are treated during employment without regard to race, color, religion, age, sex, or national origin. This includes, but is not limited to, the following: employment, upgrading, demotion or transfer, recruitment or recruiting advertisement, lay-off or termination, rate of pay or other form of compensation, and selection for training, including apprenticeship.

6.10.B Add the following as a new paragraph after Paragraph 6.10.A: This project is exempt from sales tax on products permanently incorporated into the work. Sales tax exemption certificate shall be available from the OWNER. CONTRACTOR shall attach the tax exemption certificate to invoices for materials incorporated in the work. Upon completion of the work, CONTRACTOR shall file with OWNER a notarized statement that all purchases made were entitled to be exempt. CONTRACTOR shall pay legally assessed penalties, including any unpaid sales taxes, for improper use of OWNER's tax exemption status.

6.12.A Amend this paragraph by adding the following sentence at the end of the paragraph: Should the OWNER find that the CONTRACTOR is not satisfying the requirements of this paragraph, the OWNER may withhold all or portions of progress payments until these requirements are complied with by the CONTRACTOR to the satisfaction of the OWNER.

6.18.A Amend this paragraph by deleting in the second sentence the words "as permitted by paragraph 15.04 or" following the word "except".

6.20.D Add the following as a new paragraph after Paragraph 6.20.C.2: The indemnification obligations of the CONTRACTOR under Paragraphs 6.20 and 7.03.B shall include defending all those indemnified, including, but not be limited to, payment of all professional, court, mediation, arbitration, and attorney costs which may be incurred as a result of such defense.

2.07 GENERAL CONDITIONS ARTICLE 7: OTHER WORK

7.02.A Amend this paragraph by striking the words "Supplementary Conditions" in the first sentence and replacing them with the words "Contract Document".

7.02.B Amend this paragraph by striking the words "Supplementary Conditions" and replacing them with the words "Contract Document".

7.03 Add the following as a new paragraph after Paragraph 7.02.B: Claims Between Contractors

7.03.A Add the following as a new paragraph after Paragraph 7.03: Should CONTRACTOR cause damage to the work or property of any separate contractor at the Site, or should any claim arising out of CONTRACTOR's performance of the Work at the Site be made by any separate contractor against CONTRACTOR, OWNER, ENGINEER, ENGINEER's Consultants, or the construction coordinator, CONTRACTOR shall promptly attempt to settle with such separate contractor by agreement, or otherwise resolve dispute by arbitration or at law.

7.03.B Add the following as a new paragraph after Paragraph 7.03.A: CONTRACTOR shall, to the fullest extent permitted by Laws and Regulations, indemnify and hold harmless OWNER, ENGINEER, ENGINEER's Consultants, the construction coordinator and the officers, directors, partners, employees, agents and other consultants and subcontractors of each and any of them from and against all claims, costs, losses and damages (including, but not limited to, fees and charges of engineers, architects, attorneys, and other professionals and court and arbitration costs) arising directly, indirectly or consequentially out of any action, legal or equitable, brought by any separate contractor against OWNER, ENGINEER, ENGINEER's Consultants, or the construction coordinator to the extent said claim is based on or arises out of CONTRACTOR's performance of the Work. Should a separate contractor cause damage to the Work or property of the CONTRACTOR or should the performance of work by any separate contractor at the Site give rise to any other Claim, CONTRACTOR shall not institute any action, legal or equitable, against OWNER, ENGINEER, ENGINEER's Consultants, or the construction coordinator or permit any action against them to be maintained and continued in its name or for its benefit in any court or before any arbiter which seeks to impose liability on or to recover damages from OWNER, ENGINEER, ENGINEER's Consultants, or the construction coordinator on account of any such damage or Claim.

7.03.C Add the following as a new paragraph after Paragraph 7.03.B: If CONTRACTOR is delayed at any time in performing or furnishing Work by any act or neglect of a separate contractor, and OWNER and CONTRACTOR are unable to agree as to the adjustment in Contract Times attributable thereto, CONTRACTOR may make a Claim for an extension of times in accordance with Article 12. An extension of the Contract Times shall be CONTRACTOR's sole and exclusive remedy with respect to OWNER, ENGINEER, ENGINEER's Consultants, and construction coordinator for any delay, disruption, interference, or hindrance caused by any separate contractor.

2.08 GENERAL CONDITIONS ARTICLE 8: OWNER'S RESPONSIBILITIES

8.01 Delete this paragraph in its entirety.

8.02.A Delete this paragraph in its entirety and replace with the following new paragraph: In case of termination of the employment of the ENGINEER, the OWNER may, at his option, appoint another Engineer or the OWNER may assume the responsibilities and authority of the ENGINEER defined in the Contract Documents.

8.04 Amend this paragraph by completely striking the title "Pay Promptly When Due" and replacing it with the new title "Payment".

8.04.A Amend this paragraph by deleting the words: "promptly when they are due".

8.07.A Amend this paragraph by replacing the words "is obligated to" with the word "shall".

8.08.A Amend this paragraph by adding the words "and as may be supplemented by the General Requirements" to the end of the first sentence.

8.11 Delete this paragraph in its entirety.

2.09 GENERAL CONDITIONS ARTICLE 9: ENGINEER'S STATUS DURING CONSTRUCTION

9.01.A Delete this paragraph in its entirety and replace with the following new paragraph: OWNER will designate its representative for the Project.

9.01.B Add the following as a new paragraph after Paragraph 9.01.A: The OWNER may act in the ENGINEERS's capacity during construction if a representative is not named. In such cases, where the word "ENGINEER" is stated in this document the word "OWNER" may be substituted at the OWNER's sole discretion and the OWNER may assume the designated responsibilities and authority of the ENGINEER.

9.02.A Amend this paragraph by adding the words "and OWNER" immediately after the word "ENGINEER" in the first sentence on third line. As amended, Paragraph 9.02.A remains in full force and effect.

9.03.A Delete this paragraph in its entirety and replace with the following new paragraph: The OWNER may furnish or name a Resident Project Representative to assist the OWNER and ENGINEER in providing more extensive observation of the Work. This Resident Project Representative may be a consultant, agent or employee of the ENGINEER or of the OWNER. The responsibilities and authority and limitations thereon of any such Resident Project Representative and assistants will be as provided in Paragraph 9.10 and elsewhere in the General and Supplementary Conditions, whether provided by the OWNER or ENGINEER.

9.04.A Amend this paragraph by striking the words "OWNER and" in the second sentence.

9.05.A Amend this paragraph by adding the words "With the Owner's prior approval," prior to the word "ENGINEER" beginning the first sentence. Also, in the second sentence strike the words "on OWNER and also".

9.07.A Amend this paragraph by adding the following words to the end of the paragraph after the words "paragraph 6.17": "and any applicable requirements of the General Requirements".

9.07.B Amend this paragraph by adding the following words to the end of the paragraph after the words "Articles 10, 11, and 12": "and any applicable requirements of the General Requirements".

9.07.C Amend this paragraph by adding the following words to the end of the paragraph after the words "Article 14": "and any applicable requirements of the General Requirements".

9.08.A Amend this paragraph by adding the words "OWNER and" to the second sentence before the word "CONTRACTOR". Additionally, delete the words "OWNER and" preceding the word "CONTRACTOR" in the third sentence.

9.09.B Amend this paragraph by deleting the first sentence in its entirety. In the second sentence, delete the words "OWNER or" preceding the word "CONTRACTOR", and delete the word "either" and replace it with the word "CONTRACTOR" following the words "remedies as".

2.10 GENERAL CONDITIONS ARTICLE 10: CHANGES IN THE WORK; CLAIMS

10.05.A Amend this Paragraph by changing "30" and "60" in the first and second sentences to "10" and "30", respectively.

10.05.B Amend this paragraph by deleting the words "OWNER and" from the second sentence.

10.05.B.2 Amend this paragraph by deleting the words "OWNER or" from the first sentence.

2.11 GENERAL CONDITIONS ARTICLE 11: COST OF THE WORK; CASH ALLOWANCES; UNIT PRICE WORK

This Article remains in full force and effect without additions or amendments.

2.12 GENERAL CONDITIONS ARTICLE 12: CHANGE OF CONTRACT PRICE; CHANGE OF CONTRACT TIMES

12.03.A Amend this paragraph by deleting the words "acts or neglect by OWNER" in the second sentence.

12.06.B Delete this paragraph in its entirety and replace with the following new paragraph: By submission of its bid and signing of the Contract the CONTRACTOR acknowledges and agrees that the sole and exclusive remedy for any delays or delay claims shall be an extension of Contract Time, and as such there will be no monetary compensation for any delays or delay claims, or any resulting damages, which may arise.

12.07 Add the following as a new paragraph after Paragraph 12.06.B: The CONTRACTOR agrees that said work shall be prosecuted regularly, diligently and uninterrupted at such a rate of progress as will insure full completion within the project time limits specified. It is expressly understood and agreed by and between the OWNER and CONTRACTOR that the time for completion of the work is a reasonable time, given the usual commercial and industrial conditions prevailing in the locality.

2.13 GENERAL CONDITIONS ARTICLE 13: TESTS AND INSPECTIONS; CORRECTION, REMOVAL OR ACCEPTANCE OF DEFECTIVE WORK

This Article remains in full force and effect without additions or amendments.

2.14 GENERAL CONDITIONS ARTICLE 14: PAYMENTS TO THE CONTRACTOR AND COMPLETION

14.02.A.1 Amend this paragraph by changing "20 days" in the first sentence to "10 days".

14.02.A.2 Amend this paragraph by adding the following at the end of the paragraph: To support this statement, if requested by the OWNER the CONTRACTOR shall also provide with each application for payment releases of liens from all Subcontractors and Suppliers of materials and equipment for the Work documenting payments made to them by the CONTRACTOR for items invoiced by the CONTRACTOR on previous payment applications and for which CONTRACTOR has received compensation from the OWNER.

14.02.A.3 Amend this paragraph by striking the last word "Agreement" at the end of the paragraph and replacing it with the words "Contract Documents".

14.02.A.4 Add the following as a new paragraph after Paragraph 14.02.A.3: With each application for payment the CONTRACTOR shall submit certified payrolls for all his employees that performed work on the project for the payment application period and for all Subcontractors' employees to demonstrate compliance with Rhode Island General Laws Chapter 37-13-1 through 37-13-7 and State of Rhode Island Department of Labor prevailing wage requirements. Certified payrolls shall be prepared and submitted on the "Statement of Compliance" forms as prescribed and in accordance with the State of Rhode Island Department of Labor.

14.02.A.5 Add the following as a new paragraph after Paragraph 14.02.A.4: The form used for preparation and submission of Application for Payments shall be AIA Form G702 and G703, which shall be provided by the CONTRACTOR, unless another form is approved by the OWNER prior to the submission of the first Application for Payment.

14.02.B.1 Amend this paragraph by deleting the words "within 10 days" from the first sentence.

14.02.C Delete this paragraph in its entirety.

14.02.D.2 Amend this paragraph by deleting the word "promptly" from the first and second sentences.

14.02.D.3 Delete this paragraph in it entirety.

14.02.E Add the following as a new paragraph after Paragraph 14.02.D.2: The OWNER will accept applications for payment on account of this contract as provided herein as follows:

1. For contracts with a total value of less than $500,000.00; on or about the 15th of each month 90 percent of the value, based on the contract prices, of labor and materials incorporated in the work and of materials suitably stored at the site thereof or at some other location agreed upon in writing by the parties up to the 1st day of that month, less the aggregate of previous payments; and upon substantial completion of the entire work, OWNER will consider approving a sum sufficient to increase the total payments to 95 percent of the contract amount paid. Additional retainage may be required depending on State of Rhode Island laws and regulations. Any additional retainage, however, shall be in addition to the initial 10 percent retained.

2. For contracts with a total value of $500,000.00 or greater; on or about the 15th of each month 95 percent of the value, based on the contract prices, of labor and materials incorporated in the work and of materials suitably stored at the site thereof or at some other location agreed upon in writing by the parties up to the 1st day of that month, less the aggregate of previous payments. Additional retainage may be required depending on State of Rhode Island laws and regulations. Any additional retainage, however, shall be in addition to the initial 5 percent retained.

3. In the event that the total contract value increases or decreases due to changes in the scope of work and adjustments made in accordance with Article 10 of the General Conditions, as modified by these Supplementary Conditions, the amount retained shall be adjusted in accordance with the provisions of Paragraphs 14.02.E.1 and 14.02.E.2 above.

4. In lieu of the retainage provisions of Paragraphs 14.02.E.1 through 14.02.E.3 above, the OWNER reserves the right to retain 10% of each Payment Application. At the Owner's discretion, retainage held from prior Applications may be released in the current Application.

14.03.B Add the following as a new paragraph after Paragraph 14.03.A: The CONTRACTOR shall immediately satisfy any Lien or encumbrance which, because of any act or default of the CONTRACTOR, is filed against the premises or project, and shall indemnify and save the OWNER harmless against all resulting loss and expense, including attorneys' fees. In addition, monies due under this Contract, as may be considered necessary by the OWNER, may be retained by the OWNER until all such suits, claims for damages, or expenses, etc., shall have been settled and paid.

14.04.A Delete this paragraph in its entirety and replace with the following new paragraph: For direction regarding Substantial Completion refer to the new definition for "Substantial Completion" in paragraph 2.01, Article 1 of these Supplementary Conditions.

14.04.B Delete this paragraph in its entirety.

14.06.B Add the following as a new paragraph after Paragraph 14.06.A: Upon completion of the work, the CONTRACTOR shall deliver to the OWNER all required certificates of testing and inspection.

14.07.A.4 Add the following as a new paragraph after Paragraph 14.07.A.3: Prior to preparation of the punch list by the ENGINEER, the CONTRACTOR and his Subcontractors shall submit their respective certificates of contract document compliance with CONTRACTOR's written notice that the Work is complete. After final completion, including completion of all punch list items, the OWNER will consider processing of Final Application for Payment only after receipt of: 1. Warranties and guarantees; 2. Operating manuals, instructions, and test results; 3. Record (as-built) drawings; 4. Contractor's affidavits; 5. Consent of Surety; 6. Extra materials and samples required for OWNER; 7. Lien waivers and releases; and 8. Occupancy permit, if required. Completion of the project shall be construed to include accomplishment and acceptance of punch list items.

14.07.B.1 Amend this paragraph by deleting the words "within ten days after receipt of the final Application for Payment," in the first sentence.

14.07.C Amend this Paragraph by changing the first word from "Thirty" to "Ninety".

2.15 GENERAL CONDITIONS ARTICLE 15: SUSPENSION OF WORK AND TERMINATION

15.03.A.3 Delete this paragraph and replace with the following: for all claims, costs, losses and damages incurred in settlement of terminated contracts with Subcontractors, Suppliers and others for actual work performed prior to termination; and.

15.04 Delete this paragraph in its entirety.

2.16 GENERAL CONDITIONS ARTICLE 16: DISPUTE RESOLUTION

Delete existing Paragraph 16.01 in its entirety and use the following in its entirety as Article 16:

16.01 Conditions

A. As a precondition to the implementation of action under this Article 16, the claim, when applicable, must be made and a decision rendered in accordance with the provisions of Paragraphs 9.09 and 10.05 as they apply to each party under the Contract Documents.

B. By entering into the Contract, the OWNER and CONTRACTOR agree that time is of the essence in resolving any disputes and that failure to make any claim for damages or delays in accordance with the requirements and time constraints set forth in the Contract Documents shall nullify the claim and the claimant shall waive his rights to any further action provided by the Contract or laws and waive its rights to litigate the claim.

C. The location of all meetings for negotiations and mediation shall be the OWNER's offices, with the actual physical location to be determined by the OWNER.

D. It is to be understood and accepted by all parties that any agreement reached as a result of this Article resolving a dispute will require the final approval of the City of Providence Board of Contract and Supply before the agreement can be finalized and executed.

16.02 Negotiation

A. If either the OWNER or CONTRACTOR chooses to appeal the ENGINEER's decision rendered under Paragraph 10.05 as applicable, or for unresolved claims not requiring such a decision, the OWNER or CONTRACTOR must, within 15 days of the date of the ENGINEER's decision, deliver to the ENGINEER and to the opposing party a written notice requesting that the negotiation procedures of this Article be initiated. Within 15 days after that initial written notice, the opposing party must submit its written response to the ENGINEER and the other party. The initial notice and the response must include a statement of each party's position on the claim, a summary of the party's arguments supporting its position, and the name and title of the Principal who will represent the party and the names and titles of each person who will be attending the

negotiations. The Principals representing each party must be at a higher management level than the persons responsible for administrating the Work and have authority to make decisions that settle the claim, subject to the provisions of Paragraph 16.01.D.

B. The initial negotiation meeting will be scheduled by the ENGINEER and must be held within 30 days of the date of the initial written notice. Within 10 days of the date of such notice to the ENGINEER and opposing party, the ENGINEER will contact each party and arrange and schedule a mutually agreeable time and date to meet. The ENGINEER will confirm in writing with each party the date, time and location of the meeting. All parties to the claim must make themselves available to a date within this period or the ENGINEER will establish a mandatory date and time for the meeting which both parties must attend. Failure to attend this meeting will result in the forfeiture of the claim by the party not attending and in that party's waiver of any rights to further pursue or litigate the claim.

C. The parties shall meet at the initially scheduled meeting and additional meetings arranged thereafter as necessary to attempt to resolve the claim. The parties shall use their best efforts to resolve the claim and shall consult and negotiate with each other in good faith. Recognizing their mutual interests, the parties shall attempt to reach a just and equitable resolution satisfactory to both parties. The ENGINEER shall attend the negotiation meetings if requested by either party for the sole purpose of providing information pertinent to resolving the claim.

D. Conduct and statements made pursuant to this paragraph during the negotiation process, both written and verbal, shall be considered to have been made during compromised negotiations and shall not be admissible in any further litigation pursuant to Rule 408 of the Federal Rules of Evidence and State of Rhode Island counterparts and any similarly applicable rules.

E. Each party involved in the Negotiation process shall be responsible for and pay its own costs incurred, including all administrative costs, costs of witnesses produced by the party, and legal costs and fees, and shall not pursue nor be entitled to reimbursement in any way from the opposing party.

F. If the parties do not reach a mutually acceptable resolution within 30 days of the initial meeting, either party may provide written notice to the opposing party terminating the negotiation process after that time.

16.03 Non-binding Mediation

A. OWNER and CONTRACTOR agree that they shall submit any and all claims, counterclaims, disputes, or other matters in question between them arising out of or relating to the Contract Documents or the breach thereof that remain unsettled after Negotiation to Non-binding Mediation prior to either of them initiating against the other a demand for arbitration under the Public Works Arbitration Act, if applicable, or litigation in Superior Court, as provided for in Paragraph 16.04. Completion of the Negotiation process of Paragraph 16.02 shall be a precondition to requesting Non-binding Mediation.

B. If the OWNER and CONTRACTOR cannot reach a mutually agreeable resolution to the claim through Negotiation as provided for in Paragraph 16.02, either party may choose to deliver to the opposing party a request for Non-binding Mediation. The request for Non-binding Mediation must be delivered to the opposing party within 10 days of the date of the written notice terminating the negotiation process as provided under Paragraph 16.02.F.

C. Representatives of each party authorized to make the decisions required of the Non-binding Mediation process shall meet within 15 days of the date of the request for Non-binding Mediation. Each party to the claim must provide the other with at least 5 dates within that period that they are available to meet and a meeting arranged on a mutually agreeable date. The failure of either party to attend a scheduled meeting will result in the forfeiture of the claim by that party and that party's waiver of any rights to further pursue or litigate the claim.

D. The parties shall meet in good faith to discuss issues surrounding the non-binding mediation process and to negotiate to choose an outside party as a mediator for the proceedings. If after 15 days from the initial meeting of the parties they are unable to agree upon a mediator, each of the parties shall select a mediator of its own to represent them, and the 2 mediators selected shall meet with each other within 10 days of their selection and negotiate and select a single mediator (hereinafter referred to as the "mediator") for the proceedings.

E. The mediator shall establish the rules and procedures used during the mediation proceedings. All parties to the proceedings shall abide by the rules established by the mediator.

F. Conduct and statements made pursuant to this paragraph during the mediation process, both written and verbal, shall be considered to have been made during compromised negotiations and shall not be admissible in any further litigation pursuant to Rule 408 of the Federal Rules of Evidence and State of Rhode Island counterparts and any similarly applicable rules.

G. Each party involved in the mediation process shall be responsible for and pay its own costs incurred to present its case, including all administrative costs, costs of witnesses produced by the party, and legal costs and fees, and shall not pursue or be entitled to reimbursement in any way from the opposing party. The parties will equally divide and pay all costs for the services of the mediator and any witnesses or experts (having no direct or indirect connection to or interests in either party's behalf) produced at the direct request of the mediator, including administrative, travel, and incidental expenses of both the mediator and such witnesses. If the parties were unable to agree on a single mediator and had to choose separate mediators to select the final mediator, each party shall be responsible for and pay all costs and expenses of the mediator that it chose, in addition to equally dividing the costs of the final mediator as described above.

H. If the parties do not reach a mutually acceptable resolution within 90 days of the initial meeting of the parties, either party may provide written notice to the opposing party terminating the mediation proceedings after that time.

16.04 Litigation and Public Works Arbitration

A. If the parties fail to reach a mutually acceptable agreement as a result of the non-binding mediation proceedings described in Paragraph 16.03, the exclusive remedy remaining to the parties, unless the Work is subject to the provisions of the Public Works Arbitration Act of the State of Rhode Island General Laws, will be to file suit in Superior Court for Providence County, Rhode Island before the business calendar in that court. The OWNER and CONTRACTOR agree to waive any claims that venue is inappropriate in this court.

B. If the parties fail to reach a mutually acceptable agreement as a result of the non-binding mediation proceedings described in Paragraph 16.03 and the Public Works Arbitration Act of Chapter 37-16 of the State of Rhode Island General Laws applies to the Work as determined by the contract types listed by Section 37-16-2 of the Chapter, then the Chapter shall apply and the context of Paragraph 37-16-2(b)(2) shall be in effect as if included in these Supplemental Conditions.

2.17 GENERAL CONDITIONS ARTICLE 17: MISCELLANEOUS

This Article remains in full force and effect without additions or amendments.

2.18 GENERAL CONDITIONS ARTICLE 18: WAGE RATE AND PAYROLL REQUIREMENTS

Add the following as a new Article 18 immediately following Paragraph 17.05:

18.01 Wage Rates and Payrolls

A. The CONTRACTOR shall comply with all minimum wage rates in accordance with the Rhode Island Department of Labor Laws (reference the General Laws of Rhode Island, Chapters 37-12 and 37-13, as amended). A copy of the latest Wage Rates are appended at the end of these Supplementary Conditions. The rates included are the most recent as of the time of the preparation of the Bidding Documents. These rates may change without notice, and it is the responsibility of the CONTRACTOR to check and confirm at the time of the submission of his bid that the rates used in the preparation of his bid meet the most current wage rates issued. No additional compensation will be considered by the OWNER for failure of the CONTRACTOR to comply with these requirements.

B. The CONTRACTOR shall regularly submit to the OWNER, but no less frequently than his requests for payment, certified payrolls for all his applicable employees performing work on the Project and for all his subcontractors. Certified payrolls shall be submitted on "Statement of Compliance" forms or other such forms as prescribed and provided by the State of Rhode Island Department of Labor.

18.02 State of Rhode Island General Law Chapter 37-13

A. The CONTRACTOR'S attention is specifically called to the provisions of Rhode Island General Law Chapter 37-13, Sections 37-13-1 through 37-13-13, as amended, which are appended at the end of these Supplementary Conditions. The CONTRACTOR shall fully adhere to all provisions of the latest revision of this Chapter. Appending the referenced Sections of this Chapter of State of Rhode Island General Laws shall in no way limit the responsibilities of the CONTRACTOR to comply with this and all other applicable Federal, State and local laws. The CONTRACTOR shall verify that he complies with the latest revision of this and all other such applicable laws.

18.03 Compliance

A. All Subcontractors employed by the CONTRACTOR for the Work shall fully comply with the requirements of this Article.

B. The CONTRACTOR shall bear full responsibility for compliance to the requirements of this Article by both himself and by his Subcontractors. Submissions made to the OWNER shall not relieve, nor be construed to relieve, the CONTRACTOR of this responsibility.

SECTION 00800

SUPPLEMENTARY CONDITIONS

APPENDICES

- Insurance Certificate Form - ACORD
- State of Rhode Island General Law Chapter 37-13, Sections 37- 13-1 thru 37-13-13

SECTION 00800
SUPPLEMENTARY CONDITIONS - APPENDICES
SPECIAL NOTES

1.1 This contract is subject certain Rules and Regulations, especially those pertaining to Bonds, Labor and Payment, Minority Business and Prevailing Wage Rates.

1.1.1 It is the responsibility of each successful Bidder/Vendor to thoroughly research and make themselves fully aware of all Federal, State, and Local Laws and Ordinances. It is the responsibility of each Bidder/Vendor, Contractor, and all Sub-contractors to ensure that they fully comply with all said laws and ordinances.

1.2 These specifications contain a partial list of laws and the RI Prevailing Wages Rates, in conjunction with some websites, as listed below, that may assist you in obtaining some potential pertinent information such as:

RIGL 37-12 through 37-14, which reference Contractors' Bonds, Labor and Payment, Prevailing Wages and Minority Business.

www.dlt.ri.gov/pw/ → current wage determinations
→ laws, rules and regulations

www.providenceri.com/city-clerk → Code of Ordinances

www.mbe.ri.gov → Directory Search

1.2.1 NOTE: This information can change without notice and therefore it is important to obtain the most recent information from these available websites.

1.3 The successful Bidder must submit to Providence Water project managers a complete list of all subcontractors, the proper Certificate of Insurance, and Bonds, if applicable for any part or all the work to be performed, immediately after the award of the contract and prior to the start of any work.

1.4 Before final payment and/or retainage is to be released, the successful Bidder/Vendor must submit a notarized confirmation by a responsible officer of the company confirming that all contractors and subcontractors working on this project have fully complied with all FEDERAL AND STATE LABOR LAWS, including but not limited to, payment of prevailing wages and posting of said wages on site.

SECTION 00800

SUPPLEMENTARY CONDITIONS

APPENDICES

Insurance Certificate Form - ACORD

CERTIFICATE OF LIABILITY INSURANCE

DATE (MM/DD/YYYY)

THIS CERTIFICATE IS ISSUED AS A MATTER OF INFORMATION ONLY AND CONFERS NO RIGHTS UPON THE CERTIFICATE HOLDER. THIS CERTIFICATE DOES NOT AFFIRMATIVELY OR NEGATIVELY AMEND, EXTEND OR ALTER THE COVERAGE AFFORDED BY THE POLICIES BELOW. THIS CERTIFICATE OF INSURANCE DOES NOT CONSTITUTE A CONTRACT BETWEEN THE ISSUING INSURER(S), AUTHORIZED REPRESENTATIVE OR PRODUCER, AND THE CERTIFICATE HOLDER.

IMPORTANT: If the certificate holder is an ADDITIONAL INSURED, the policy(ies) must be endorsed. If SUBROGATION IS WAIVED, subject to the terms and conditions of the policy, certain policies may require an endorsement. A statement on this certificate does not confer rights to the certificate holder in lieu of such endorsement(s).

PRODUCER	CONTACT NAME:	
	PHONE (A/C, No, Ext):	FAX (A/C, No):
	E-MAIL ADDRESS:	
	INSURER(S) AFFORDING COVERAGE	NAIC #
INSURED	INSURER A :	
	INSURER B :	
	INSURER C :	
	INSURER D :	
	INSURER E :	
	INSURER F :	

COVERAGES **CERTIFICATE NUMBER:** **REVISION NUMBER:**

THIS IS TO CERTIFY THAT THE POLICIES OF INSURANCE LISTED BELOW HAVE BEEN ISSUED TO THE INSURED NAMED ABOVE FOR THE POLICY PERIOD INDICATED. NOTWITHSTANDING ANY REQUIREMENT, TERM OR CONDITION OF ANY CONTRACT OR OTHER DOCUMENT WITH RESPECT TO WHICH THIS CERTIFICATE MAY BE ISSUED OR MAY PERTAIN, THE INSURANCE AFFORDED BY THE POLICIES DESCRIBED HEREIN IS SUBJECT TO ALL THE TERMS, EXCLUSIONS AND CONDITIONS OF SUCH POLICIES. LIMITS SHOWN MAY HAVE BEEN REDUCED BY PAID CLAIMS.

INSR LTR	TYPE OF INSURANCE	ADDL INSD	SUBR WVD	POLICY NUMBER	POLICY EFF (MM/DD/YYYY)	POLICY EXP (MM/DD/YYYY)	LIMITS	
	COMMERCIAL GENERAL LIABILITY						EACH OCCURRENCE	$
	CLAIMS-MADE / OCCUR						DAMAGE TO RENTED PREMISES (Ea occurrence)	$
							MED EXP (Any one person)	$
							PERSONAL & ADV INJURY	$
	GEN'L AGGREGATE LIMIT APPLIES PER:						GENERAL AGGREGATE	$
	POLICY / PRO-JECT / LOC						PRODUCTS - COMP/OP AGG	$
	OTHER:							$
	AUTOMOBILE LIABILITY						COMBINED SINGLE LIMIT (Ea accident)	$
	ANY AUTO						BODILY INJURY (Per person)	$
	ALL OWNED AUTOS / SCHEDULED AUTOS						BODILY INJURY (Per accident)	$
	HIRED AUTOS / NON-OWNED AUTOS						PROPERTY DAMAGE (Per accident)	$
								$
	UMBRELLA LIAB / OCCUR						EACH OCCURRENCE	$
	EXCESS LIAB / CLAIMS-MADE						AGGREGATE	$
	DED / RETENTION $							$
	WORKERS COMPENSATION AND EMPLOYERS' LIABILITY						PER STATUTE / OTH-ER	
	ANY PROPRIETOR/PARTNER/EXECUTIVE OFFICER/MEMBER EXCLUDED? **(Mandatory in NH)** If yes, describe under DESCRIPTION OF OPERATIONS below	Y / N	N / A				E.L. EACH ACCIDENT	$
							E.L. DISEASE - EA EMPLOYEE	$
							E.L. DISEASE - POLICY LIMIT	$

DESCRIPTION OF OPERATIONS / LOCATIONS / VEHICLES (ACORD 101, Additional Remarks Schedule, may be attached if more space is required)

Project: _____

The City of Providence, Providence Water, its officers and agents are named as additional parties insured for all work performed for the additional insureds.

CERTIFICATE HOLDER

The City of Providence and Providence Water
125 Dupont Drive
Providence, RI 02908

CANCELLATION

SHOULD ANY OF THE ABOVE DESCRIBED POLICIES BE CANCELLED BEFORE THE EXPIRATION DATE THEREOF, THE ISSUING INSURER WILL ENDEAVOR TO MAIL 30 DAYS WRITTEN NOTICE TO THE CERTIFICATE HOLDER NAMED TO THE LEFT, BUT FAILURE TO DO SO SHALL IMPOSE NO OBLIGATION OR LIABILITY OF ANY KIND UPON THE INSURER, ITS AGENTS OR REPRESENTATIVES.

AUTHORIZED REPRESENTATIVE

SAMPLE

© 1988-2014 ACORD CORPORATION. All rights reserved.

The ACORD name and logo are registered marks of ACORD

SECTION 00800

SUPPLEMENTARY CONDITIONS

APPENDICES

State of Rhode Island General Law

Chapter 37-13, Sections 37-13-1 thru 37-13-13

ATTACHED ARE COPIES OF R.I.G.L. §37-13-1 THROUGH 37-13-13, WHICH IS A PARTIAL LIST OF STATE LABOR LAWS CONCERNING PAYMENT OF PREVAILING WAGES. A COMPLETE COPY OF THE LAW CAN BE OBTAINED AT THE STATE DEPARTMENT OF LABOR. SAID ATTACHMENT OF THESE SECTIONS DOES NOT LIMIT A RESPONSIBILITY UNDER R.I.G.L. §37-13-1, ET SEQ.

§ 37-13-1 "Public works" defined. – "Public works" as used in this chapter shall mean any public work consisting of grading, clearing, demolition, improvement, completion, repair, alteration, or construction of any public road or any bridge, or portion thereof, or any public building, or portion thereof, or any heavy construction, or any public works projects of any nature or kind whatsoever.

§ 37-13-2 "Contractor" defined – Information required. – The term "contractor" as used in this chapter shall mean the bidder whose bid has been accepted by an authorized agency or awarding authority as the bidder possessing the skills, ability, and integrity necessary to the faithful performance of the contract or work, and who shall certify that he or she is able to furnish labor that can work in harmony with all other elements of labor employed or to be employed on the contract or work. Essential information in regard to qualifications shall be submitted in such form to the awarding authority and the director of labor and training as the director of labor and training shall require. The authorized agency or awarding authority shall reserve the right to reject all bids, if it be in the public interest to do so.

§ 37-13-3 Contractors subject to provisions – Weekly payment of employees. – All contractors, who have been awarded contracts for public works by an awarding agency or authority of the state or of any city, town, committee, or by any person or persons therein, in which state or municipal funds are used and of which the contract price shall be in excess of one thousand dollars ($1,000), whether payable at the time of the signing of the contract or at a later date, and their subcontractors, on those public works shall pay their employees at weekly intervals and shall comply with the provisions set forth in §§ 37-13-4 – 37-13-14 and § 37-13-16.

§ 37-13-4 Provisions applicable to public works contracts – Lists of subcontractors. – All public works shall be done by contract, subject to the same provisions of law relating thereto and to the letting thereof, which are applicable to similar contracts of the awarding authority or authorized agency, hereinafter called the "proper authority", in the general location where the work is to be performed and which are not contrary to the provisions of §§ 37-13-1 – 37-13-14 and § 37-13-16. Each contractor after the award of a contract for public works shall submit to the proper authority a list of his or her subcontractors of any part or all of the work. The list shall be submitted in such manner or form as the proper authority shall uniformly require from contractors in all public works.

§ 37-13-5 Payment for trucking or materials furnished – Withholding of sums due. – A contractor or subcontractor on public works authorized by a proper authority shall pay any obligation or charge for trucking and material which have been furnished for the use of the contractor or subcontractor, in connection with the public works being performed by him or her, within ninety (90) days after the obligation or charge is incurred or the trucking service has been performed or the material has been delivered to the site of the work, whichever is later. When it is brought to the notice of the proper authority in a city or town, or the proper authority in the state having supervision of the contract, that the obligation or charge has not been paid by the contractor or subcontractor, the proper authority may deduct and hold for a period not exceeding sixty (60) days, from sums of money due to the contractor or subcontractor, the equivalent amount of such sums certified by a trucker or materialman creditor as due him or her, as provided in this section, and which the proper authority determines is reasonable for trucking performed or materials furnished for the public works.

§ 37-13-6 Ascertainment of prevailing rate of wages and other payments – Specification of rate in call for bids and in contract. – Before awarding any contract for public works to be done, the proper authority shall ascertain from the director of labor and training the general prevailing rate of the regular, holiday, and overtime wages paid and the general prevailing payments on behalf of employees only, to lawful welfare, pension, vacation, apprentice training, and educational funds (payments to the funds must constitute an ordinary business expense deduction for federal income tax purposes by contractors) in the city, town, village, or other appropriate political subdivision of the state in which the work is to be performed, for each craft, mechanic, teamster, laborer, or type of worker needed to execute the contract for the public works. The proper authority shall, also, specify in the call for bids for the contract and in the contract itself the general prevailing rate of the regular, holiday, and overtime wages paid and the payments on behalf of employees only, to the welfare, pension, vacation, apprentice training, and education funds existing in the locality for each craft, mechanic, teamster, laborer, or type of worker needed to execute the contract or work.

§ 37-13-7 Specification in contract of amount and frequency of payment of wages. – (a) Every call for bids for every contract in excess of one thousand dollars ($1,000), to which the state of Rhode Island or any political subdivision thereof or any public agency or quasi-public agency is a party, for construction, alteration, and/or repair, including painting and decorating, of public buildings or public works of the state of Rhode Island or any political subdivision thereof, or any public agency or quasi-public agency and which requires or involves the employment of employees, shall contain a provision stating the minimum wages to be paid various types of employees which shall be based upon the wages that will be determined by the director of labor and training to be prevailing for the corresponding types of employees employed on projects of a character similar to the contract work in the city, town, village, or other appropriate political subdivision of the state of Rhode Island in which the work is to be performed. Every contract shall contain a stipulation that the contractor or his or her subcontractor shall pay all the employees employed directly upon the site of the work, unconditionally and not less often than once a week, and without subsequent deduction or rebate on any account, the full amounts accrued at time of payment computed at wage rates not less than those stated in the call for bids, regardless of any contractual relationships which may be alleged to exist between the contractor or subcontractor and the employees, and that the scale of wages to be paid shall be posted by the contractor in a prominent and easily accessible place at the site of the work; and the further stipulation that there may be withheld from the contractor so much of the accrued payments as may be considered necessary to pay to the employees employed by the contractor, or any subcontractor on the work, the difference between the rates of wages required by the contract to be paid the employees on the work and the rates of wages received by the employees and not refunded to the contractor, subcontractors, or their agents.

(b) The terms "wages", "scale of wages", "wage rates", "minimum wages", and "prevailing wages" shall include:

(1) The basic hourly rate of pay; and

(2) The amount of:

(A) The rate of contribution made by a contractor or subcontractor to a trustee or to a third person pursuant to a fund, plan, or program; and

(B) The rate of costs to the contractor or subcontractor which may be reasonably anticipated in providing benefits to employees pursuant to an enforceable commitment to carry out a financially responsible plan or program which was communicated in writing to the employees affected, for medical or hospital care, pensions on retirement or death, compensation for injuries or illness resulting from occupational activity, or insurance to provide any of the foregoing, for unemployment benefits, life insurance, disability and sickness insurance, or accident insurance, for vacation and holiday pay, for defraying costs of apprenticeship or other similar programs, or for other bona fide fringe benefits, but only where the contractor or subcontractor is not required by other federal, state, or local law to provide any of the benefits; provided, that the obligation of a contractor or subcontractor to make payment in accordance with the prevailing wage determinations of the director of labor and training insofar as this chapter of this title and other acts incorporating this chapter of this title by reference are concerned may be discharged by the making of payments in cash, by the making of contributions of a type referred to in subsection (b)(2), or by the assumption of an enforceable commitment to bear the costs of a plan or program of a type referred to in this subdivision, or any combination thereof, where the aggregate of any payments, contributions, and costs is not less than the rate of pay described in subsection (b)(1) plus the amount referred to in subsection (b)(2).

(c) The term "employees", as used in this section, shall include employees of contractors or subcontractors performing jobs on various types of public works including mechanics, apprentices, teamsters, chauffeurs, and laborers engaged in the transportation of gravel or fill to the site of public works, the removal and/or delivery of gravel or fill or ready-mix concrete, sand, bituminous stone, or asphalt flowable fill from the site of public works, or the transportation or removal of gravel or fill from one location to another on the site of public works, and the employment of the employees shall be subject to the provisions of subsections (a) and (b).

(d) The terms "public agency" and "quasi-public agency" shall include, but not be limited to, the Rhode Island industrial recreational building authority, the Rhode Island economic development corporation, the Rhode Island airport corporation, the Rhode Island industrial facilities corporation, the Rhode Island refunding bond authority, the Rhode Island housing and mortgage finance corporation, the Rhode Island resource recovery corporation, the Rhode Island public transit authority, the Rhode Island student loan authority, the water resources board corporate, the Rhode Island health and education building corporation, the Rhode Island higher education assistance authority, the Rhode Island turnpike and bridge authority, the Narragansett Bay water quality management district commission, Rhode Island telecommunications authority, the convention center authority, the board of governors for higher education, the board of regents for elementary and secondary education, the capital center commission, the housing resources commission, the Quonset Point-Davisville management corporation, the Rhode Island children's crusade for higher education, the Rhode Island depositors economic protection corporation, the Rhode Island lottery commission, the Rhode Island partnership for science and technology, the Rhode Island public building authority, and the Rhode Island underground storage tank board.

§ 37-13-8 Investigation and determination of prevailing wages – Filing of schedule. – The director of labor and training shall investigate and determine the prevailing wages and payments made to or on behalf of employees, as set forth in § 37-13-7, paid in the trade or occupation in the city, town, village, or other appropriate political subdivision of the state and keep a schedule on file in his or her office of the customary prevailing rate of wages and payments made to or on behalf of the employees which shall be open to public inspection. In making a determination, the director of labor may adopt and use such appropriate and applicable prevailing wage rate determinations as have been made by the secretary of labor of the United States of America in accordance with the Davis-Bacon Act, as amended, 40 U.S.C. § 276a.

§ 37-13-9 Statutory provisions included in contracts. – A copy of §§ 37-13-5, 37-13-6, and 37-13-7 shall be inserted in all contracts for public works awarded by the state, any city, town, committee, an authorized agency, or awarding authority thereof, or any person or persons in their behalf in which state or municipal funds are used if the contract price is in excess of one thousand dollars ($1,000).

§ 37-13-10 Overtime compensation. – Labor performed under the provisions of §§ 37-13-1 – 37-13-16, during the period of forty (40) hours in any one week and during the period of eight (8) hours in any one day, shall be considered a legal week's work or a legal day's work, as the case may be, and any number of hours of employment in any one week greater than the number of forty (40) hours or in any one day greater than the number of eight (8) hours shall be compensated at the prevailing rate of wages for overtime employment; provided, however, when the director of labor and training has determined in the investigation provided for in §§ 37-13-7 and 37-13-8 that there is a prevailing practice in a city, town, or other appropriate political subdivision to pay an overtime rate of wages for work of any craft, mechanic, teamster, laborer, or type of worker needed to execute the work other than hours worked in any one week greater than the number of forty (40) or in hours worked in any one day greater than the number of eight (8), then the prevailing practice shall determine the legal workday and the legal workweek in the city or town for the work and the prevailing rate of overtime wages shall be paid for such work in excess of that legal workday or week, as the case may be.

§ 37-13-11 Posting of prevailing wage rates. – Each contractor awarded a contract for public works with a contract price in excess of one thousand dollars ($1,000), and each subcontractor who performs work on those public works, shall post in conspicuous places on the project, where covered workers are employed, posters which contain the current, prevailing rate of wages and the current, prevailing rate of payments to the funds required to be paid for each craft or type of worker employed to execute the contract as set forth in §§ 37-13-6 and 37-13-7. Posters shall be furnished to contractors and subcontractors by the director of labor and training, who shall determine the size and context thereof from time to time, at the time a contract is awarded. A contractor or subcontractor who fails to comply with the provisions of this section shall be deemed guilty of a misdemeanor and shall pay to the director of labor and training one hundred dollars ($100) for each calendar day of noncompliance as determined by him or her. Contracts set forth in this section shall not be awarded by the state, any city, town, or any agency thereof until the director of labor and training has prepared and delivered the posters to the division of purchases, if the state or any agency thereof is the proper authority, or to the city, town, or an agency thereof, if it is the proper authority, and the contractor to whom the contract is to be awarded.

§ 37-13-12 Wage records of contractors. – Each contractor awarded a contract with a contract price in excess of one thousand dollars ($1,000) for public works, and each subcontractor who performs work on those public works, shall keep an accurate record showing the name, occupation, and actual wages paid to each worker employed by him or her and the payments to all the employee funds specified in §§ 37-13-6 and 37-13-7 by him or her in connection with the contract or work. The director and his or her authorized representatives shall have the right to enter any place of employment at all reasonable hours for the purpose of inspecting the wage records and seeing that all provisions of this chapter are complied with.

§ 37-13-12.1 Obstruction of enforcement. – Any effort of any employer to obstruct the director and his or her authorized representatives in the performance of their duties shall be deemed a violation of this chapter and punishable as such.

§ 37-13-12.2 Subpoena powers. – The director and his or her authorized representatives shall have power to administer oaths and examine witnesses under oath, issue subpoenas, subpoenas duces tecum, compel the attendance of witnesses, and the production of papers, books, accounts, records, payrolls, documents, and testimony, and to take depositions and affidavits in any proceeding before the director.

§ 37-13-12.3 Compelling obedience to subpoenas. – In case of failure of any person to comply with any subpoena lawfully issued, or subpoena duces tecum, or on the refusal of any witness to testify to any matter regarding which he or she may be lawfully interrogated, it shall be the duty of the superior court, or any judge thereof, on application by the director, to compel obedience by proceedings in the nature of those for contempt.

§ 37-13-12.4 Penalty for violations. – Except as otherwise provided in this chapter, any employer who shall violate or fail to comply with any of the provisions of this chapter shall be guilty of a misdemeanor and upon conviction thereof shall be punished by a fine of not less than fifty dollars ($50.00) nor more than one hundred dollars ($100) for each separate offense, or by imprisonment for not less than ten (10) nor more than ninety (90) days, or by both fine and imprisonment. Each day of failure to pay wages due an employee at the time specified in this chapter shall constitute a separate and distinct violation.

§ 37-13-13 Furnishing payroll record to director of labor and training. – Each contractor awarded a contract with a contract price in excess of one thousand dollars ($1,000) for public works, and each subcontractor who performs work on public works, shall furnish a certified copy of his or her payroll record of his or her employees employed upon the public works to the director of labor and training on a weekly basis for the preceding week. The director of labor and training may promulgate reasonable rules and regulations to enforce the provisions of this section. A contractor or subcontractor who fails to comply with the provisions of this section shall be deemed guilty of a misdemeanor and shall pay to the director of labor and training one hundred dollars ($100) for each calendar day of noncompliance as determined by the director of labor and training. Any of those revenues shall be deposited as general revenues.

NOTE: THE SUCCESSFUL CONTRACTOR MUST SUBMIT TO PROVIDENCE WATER PROJECT MANAGER A COMPLETE LIST OF ALL SUBCONTRACTORS OF ANY PART OR ALL OF THE WORK TO BE PERFORMED IMMEDIATELY AFTER THE AWARD OF THE CONTRACT AND PRIOR TO THE START OF ANY WORK. ALL SUBCONTRACTORS MUST COMPLY FULLY WITH ALL STATE LABOR LAWS.

NOTE: BEFORE FINAL PAYMENT AND/OR RETAINAGE IS TO BE RELEASED, THE SUCCESSFUL VENDOR MUST SUBMIT A NOTARIZED CONFIRMATION BY A RESPONSIBLE OFFICER OF THE COMPANY CONFIRMING THAT ALL CONTRACTORS AND SUBCONTRACTORS WORKING ON THIS PROJECT HAVE FULLY COMPLIED WITH ALL STATE LABOR LAWS INCLUDING BUT NOT LIMITED TO PAYMENT OF PREVAILING WAGES, AND POSTING SAID WAGES ON SITE.

SECTION 00800

SUPPLEMENTARY CONDITIONS

APPENDICES

- **Rules and Regulations Relating to Prevailing Wages (Revised July 2013)**

STATE OF RHODE ISLAND AND PROVIDENCE PLANTATIONS
DIVISON OF PROFESSIONAL REGULATIONS

RULES AND REGULATIONS RELATING TO PREVAILING WAGES

1) Any contractor who has been awarded a contract for a public works project in excess of One Thousand Dollars ($1,000), or any subcontractor performing work on said project, shall be liable for the payment of the applicable Prevailing Wage amount listed in the General Wage Decisions (Davis-Bacon Wage Determinations) regardless of whether or not the prevailing wages were listed in the contract between the contractor and the awarding authority of the state or political sub-division, as required by law. The Fringe Benefit Credit amount listed in the applicable General Wage Decisions (Davis-Bacon Wage Determinations) must always be paid in full as either a bona fide Fringe Benefit Credit or cash equivalent or both.

2) Any contractor who has been awarded a contract for a public works project in excess of One Thousand Dollars ($1,000), shall be liable for the payment of prevailing wages regardless of whether or not a subcontractor may be the primary obligor. The contractor shall ensure that a subcontractor pays the prevailing wage to its employees and otherwise complies with the provisions of R. I. Gen. Laws §§ 37-13-1, *et seq*.

3) Pursuant to R. I. Gen. Laws § 37-13-4, all public works projects shall be done by contract. Before awarding a contract for a public works project, an awarding authority shall first determine from the Department of Labor and Training's website, Debarment List, whether the proposed contractor has been debarred under R. I. Gen. Laws § 37-13-14.1 and shall then disqualify all such debarred contractors. In addition, the awarding authority shall notify all bidders that the Prevailing Wage is required as a condition of the contract.

4) All alleged violations of noncompliance with Chapter 13 of Title 37 of the General Laws of Rhode Island shall be made in writing, and on forms issued by the Department of Labor and Training. The written complaints must be filed with the Department of Labor and Training on the Department's written complaint form within twenty-four (24) months of the completion of the project.

5) For apprentices registered pursuant to R. I. Gen. Laws § 28-45-1, *et seq.*, a percentage of the Base Hourly Rate of Pay must be taken in accordance with the scale listed in the apprentice's apprenticeship agreement. If the employee is not registered as an apprentice pursuant to R. I. Gen. Laws § 28-45-1, *et seq*., then the employee must be paid the full Prevailing Wage according to the General Wage Decisions (Davis-Bacon Wage Determinations) for the classification of the work actually performed. Moreover, all general contractors and subcontractors who perform work on any public works contract awarded by the state and valued at One Million Dollars ($1,000,000) or more shall employ apprentices required for the performance of the awarded contract. The number of apprentices shall comply with the apprentice to journeyperson ratio for each trade approved by the Department of Labor and Training. State awarding authorities may determine

from the Department of Labor and Training's website, whether all contractors and subcontractors have a registered apprenticeship program. Apprentices found to be working outside of the applicable journeyperson to apprentice job site ratios shall be paid at the full applicable journeyperson Prevailing Wage. See Appendix A, Job Site Ratios for Licensed and Unlicensed Trades, Rules and Regulations Relating to Labor Standards for the Registration of Apprenticeship Programs Under Title 28, Chapter 45, Apprentice Programs in Trade & Industry.

6) Any proceeding to debar a contractor from bidding on a public works project under the provisions of R. I. Gen. Laws § 37-13-14.1, may be brought against the principals, officers, or successors in interest of such contractor, where such principals, officers or successors in interest are responsible for the violation of the prevailing wage requirements.

7) The Department of Labor and Training will be guided by the General Wage Decisions (Davis-Bacon wage determinations) in accordance with R. I. Gen. Laws § 37-13-8.

8) In order to comply with R. I. Gen. Laws § 37-13-13, contractors and subcontractors shall execute a fully completed RI Certified Weekly Payroll Form, Appendix A, for each week of work performed on the project and shall furnish the fully executed RI Certified Weekly Payroll Form to the awarding authority on a monthly basis for all work completed in the preceding month. However, federal forms may be submitted to the Rhode Island Department of Transportation. If the Department of Labor and Training investigates any contractor awarded a contract from the Rhode Island Department of Transportation, the contractor shall furnish the Department of Labor and Training a fully executed certified payroll on the RI Certified Weekly Payroll Form, Appendix A, within ten (10) days of request. All awarding authorities shall furnish the Department of Labor and Training any requested certified payroll within ten days of request. The Department of Labor and Training may impose a penalty of up to Five Hundred Dollars ($500) for each calendar day of noncompliance with this section.

9) In compliance with R. I. Gen. Laws § 37-13-13, when the general or primary contract is One Million Dollars ($1,000,000) or more, each contractor or subcontractor shall maintain on the work site a fully executed RI Certified Prevailing Wage Daily Log, Appendix B, listing the contractor's employees employed each day on the public works site; the RI Certified Prevailing Wage Daily Log shall be available for inspection on the public works site at all times; this rule shall not apply to road, highway, or bridge public works projects. Where applicable, contractors must furnish both the Rhode Island Certified Prevailing Wage Daily Log, Appendix B, together with the Rhode Island Weekly Certified Payroll, Appendix A, to the appropriate awarding authority. The Department of Labor and Training may impose a penalty of up to Five Hundred Dollars ($500) for each calendar day of noncompliance with this section; mere errors or omissions in the RI Certified Prevailing Wage Daily Log shall not be grounds for imposing a penalty under this section.

10) The Director of Labor and Training may enter into consent agreements with contractors and/or subcontractors to resolve all issues under R. I. Gen. Laws §§ 37-13-1, *et seq*.

11) In enforcing the provisions of Chapter 13 of Title 37, when any contractor or subcontractor fails to comply with R. I. Gen. Laws § 37-13-13(a) and (b), the Director of Labor and Training may order an awarding authority to withhold all future payments until such time as the contractor or subcontractor has fully complied. The amount withheld from any subcontractor shall be proportionate to the amount attributed or due the offending subcontractor as determined by the awarding authority.

12) All service and maintenance contracts with the State of Rhode Island or political subdivision therefore shall comply with the provisions of Chapter 13 of Title 37 where the contract price exceeds One Thousand Dollars ($1,000) and the work includes alterations, installation, repairs or construction. *See* "Definitions" herein for exceptions.

13) Each contractor awarded a contract with a contract price in excess of One Thousand Dollars ($1000) for public works, each subcontractor who performs work on public works and each awarding authority awarding any such contract, shall keep those certified weekly payroll records required by R. I. Gen. Laws § 37-13-13 and on the forms set forth in Regulation 8 above, in a safe and secure location for a period of five (5) years from the date such work was performed. Certified weekly payroll records shall be made available to the Director of the Department of Labor and Training within ten (10) days of request to any contractor, subcontractor, or awarding authority.

14) The prevailing rate of wages and payments made to or on behalf of employees, as set forth in Chapter 13 of Title 37, for general contractors and subcontractors, shall be determined as of the date of the awarding of the contract for public works to the general contractor and shall remain effective until such time as those rates are modified pursuant to R. I. Gen. Laws § 37-13-8.

15) The Department of Labor and Training, in making its investigation and determination of prevailing wages pursuant to R. I. Gen. Laws § 37-13-8, shall not determine or address jurisdictional disputes between trade or trades.

16) All alleged violations of non-compliance with Chapter 13 of Title 37 filed with the Department of Labor and Training shall include information sufficient to establish a prima facie claim, and the Department may reject any complaint that does not establish such claim. This information shall include, but shall not be limited to: evidence of the actual work performed by the employee(s) involved in the complaint; the locations(s) and the exact date(s) the work in question was performed; verification of the funding source; and evidence that the correct prevailing wage was not in fact received.

17) The Director of Labor and Training hereby adopts the United States Department of Labor's definition of bona fide fringe benefit credits. These benefits may include medical or hospital coverage, life insurance, disability insurance (not

workers' compensation), pension, 401k, apprentice costs (books, tuition) or holiday, sick, vacation/personal time. State mandated unemployment insurance, travel, gas reimbursement, company vehicle, uniforms and discretionary bonuses are not bona-fide fringe benefits. In addition, in order for the plan to be acceptable, the following stipulations must be met:

- Contributions must be irrevocable and for the employee's benefit;
- Contributions must be made regularly and at least on a quarterly basis;
- Contributions must not be required by law (i.e.: taxes, workers' compensation, social security, etc.);
- Contributions made for fringe benefit plans for prevailing wage work may not be used to fund the plan for periods of non-prevailing wage work;
- The amount of contributions for fringe benefits must be paid irrevocably to a trustee or third party.

If the fringe benefits are anticipated to be paid from general assets of the contractor (ex. holidays, sick and vacation days, profit sharing, etc.), the contractor must set aside, in an escrow account the amount of money the contractor plans to claim as a fringe benefit credit for the prevailing wage project. For example, if a contractor wants to claim credit for 10 paid holidays per year, the contractor must calculate the amount that will be paid (10 holidays x 8 hours x $10/hour = $800) and place those funds in an escrow account. In the event that an employee leaves the company before the end of the calendar year and prior to the completion of the project, any remaining escrowed funds must be paid to the employee. The allowable hourly credit must be determined separately and documented for each employee since the credit is based on figures that will usually vary for each individual, depending on their benefit contribution amount, type of benefits, hours worked, etc. In addition, only the employer's contribution toward a benefit may be used to calculate the allowable hourly credit.

18) Owners, supervisors, or foremen performing manual work on the public works site must be documented as employees on the contractor's RI Certified Weekly Payroll Form, Appendix A, which must show payment of the applicable prevailing wage rate.

19) Pursuant to R. I. Gen. Laws § 37-13-10, overtime shall be calculated on the Base Hourly Rate of Pay listed in the General Wage Decisions (Davis-Bacon Wage Determinations) and not the Fringe Benefit Credit amount. The full Fringe Benefit Credit amount listed in the General Wage Decisions (Davis-Bacon Wage Determinations) must be added to the adjusted Base Hourly Rate of Pay.

20) Pursuant to R.I. Gen. Laws §§ 37-13-2 and 37-13-3.1, all general contractors and subcontractors who bid and/or perform work on state public works projects valued at One Million Dollars ($1,000,000) or more shall employ apprentices and shall be subject to the following provisions:

A) Bidding

i) Pursuant to R. I. Gen. Laws § 37-13-2, any person, firm, or corporation bidding on a state public works contract ("general contractor") valued at One Million Dollars ($1,000,000) or more shall certify their ability to perform the contract by meeting the apprenticeship requirements set forth in R. I. Gen. Laws § 37-13-3.1.

ii) If the general contractor employs apprentices, then the apprentices must be subject to an apprenticeship agreement as defined by R. I. Gen. Laws § 28-45-10 in order for the general contractor to qualify for payment of the applicable apprentice wage rate set forth on the wage schedule pursuant to Rule 5 herein.

iii) Prior to bidding on a state public works contract valued at One Million Dollars ($1,000,000) or more, the general contractor shall certify compliance with apprenticeship requirements by fully executing a General Contractor Apprenticeship Certification Form. The general contractor shall meet one of the qualifications identified on said form. The general contractor shall attach said form to his/her application to bid and submit to the awarding authority.

iv) No contract award for a state public works contract valued at One Million Dollars ($1,000,000) or more shall be made to any general contractor who fails to submit a fully executed and truthful General Contractor Apprenticeship Certification Form.

B) Awarding

i) Pursuant to R. I. Gen. Laws § 37-13-3.1, all general contractors who perform work on any public works contract awarded by the state and valued at One Million Dollars ($ 1,000,000) or more shall certify their ability to perform the contract by meeting the apprenticeship requirements set forth in R. I. Gen. Laws § 37-13-3.1.

ii) If the general contractor employs apprentices, then the apprentices must be subject to an apprenticeship agreement as defined by R. I. Gen. Laws § 28-45-10 in order for the general contractor to qualify for payment of the applicable apprentice wage rate set forth on the wage schedule pursuant to Rule 5 herein.

iii) Prior to the award of a state public works contract valued at One Million Dollars ($1,000,000) or more, the general contractor who will perform the work shall re-certify compliance with apprenticeship requirements by fully executing a General Contractor Apprenticeship Re-Certification and Certification Form. The general contractor shall meet one of the qualifications identified in Part A of said form.

iv) The general contractor who will perform work on the state public works project only through the use of subcontractors shall certify compliance with the apprenticeship requirements by completing the "non-performance" qualification of Part A of said form. Whether the general contractor or its subcontractors are performing work on the project, the general contractor shall certify that the subcontractors performing work on the project are in compliance with the apprenticeship requirements set forth in R. I. Gen. Laws § 37-13-3.1 by completing Part B of said form. General contractors shall submit said form to the awarding authority.

v) No contract award shall be made to any general contractor who fails to submit a fully executed and truthful General Contractor Apprenticeship Re-Certification and Certification Form.

C) Awarding & Subcontractors

i) Pursuant to R. I. Gen. Laws § 37-13-3.1, any subcontractor who performs work on any public works contract awarded by the state and valued at One Million Dollars ($ 1,000,000) or more shall certify its ability to perform the contract by meeting the apprenticeship requirements set forth in R. I. Gen. Laws § 37-13-3.1.

ii) If subcontractors employ apprentices, then the apprentices must be subject to an apprenticeship agreement as defined by R. I. Gen. Laws § 28-45-10 in order for subcontractors to qualify for payment of the applicable apprentice wage rate set forth on the wage schedule pursuant to Regulation 5 herein.

iii) Prior to the award of a state public works contract valued at One Million Dollars ($1,000,000) or more, all subcontractors who will perform work on the project shall certify compliance with the apprenticeship requirements by fully executing a Subcontractor Apprenticeship Certification Form. The subcontractor shall meet one of the qualifications identified in Part A of said form.

iv) The subcontractor who will perform work on the state public works project only through the use of subcontractors shall certify compliance with the apprenticeship requirements by completing the "non-performance" qualification of Part A of said form. Whether the subcontractor or its subcontractors are performing work on the project, the subcontractor shall certify that the subcontractors performing work on the project are in compliance with the apprenticeship requirements set forth in R. I. Gen. Laws § 37-13-3.1 by completing Part B of said form. Subcontractors shall submit said form to the general contractor and/or hiring subcontractor for submission to the awarding authority.

v) For state public works contracts valued at One Million Dollars ($1,000,000) or more, no general contractor and/or subcontractor shall

hire any subcontractor who fails to submit a fully executed and truthful Subcontractor Apprenticeship Certification Form.

vi) For subcontractors hired after contract award of a state public works contract valued at One Million Dollars ($1,000,000) or more, said subcontractors shall submit said apprenticeship certification form to the general contractor and/or hiring subcontractor prior to or at the time of hiring.

D) Cancellation of Award; Penalties and Enforcement Proceedings

i) Pursuant to R. I. Gen. Laws § 37-13-16, an awarding authority may cancel an award if apprentice wages are paid to apprentices who are not subject to an apprenticeship agreement as defined by R. I. Gen. Laws § 28-45-10.

ii) Pursuant to R. I. Gen. Laws § 37-13-12.4, general contractors and subcontractors determined to be in violation of these regulations shall be subject to fines and penalties.

iii) Pursuant to R. I. Gen. Laws §§ 37-13-14.1(a) and (d) and (f), general contractors and subcontractors determined to be in violation of these regulations shall be subject to enforcement proceedings.

DEFINITIONS

A) "Base Hourly Rate of Pay" means the rate of pay identified for the trade as "Rates" on the General Wage Decisions (Davis-Bacon Wage determinations).

B) "Construction"
   1) "construction" means construction activity, as distinguished from manufacturing, furnishing of materials or servicing and maintenance work and includes, without limitation, the construction of buildings, structures, improvements of all types and heavy construction work;

   2) construction work includes altering, remodeling, demolishing existing structures, installation of items fabricated off-site, painting and decorating, the transporting of materials and supplies to or from the public works site by the employee of the public works contractor or subcontractor consistent with R. I. Gen. Laws § 37-13-7(c).

C) "Employee" means any person employed by an employer. This definition shall be interpreted consistent with the definition of "employee" under 29 U.S.C. 203(e) and the Fair Labor Standards Act, including any exemptions thereto under said Act applicable to employment in Rhode Island.

D) "Employer" means any person acting directly or indirectly in the interest of an employer in relation to an employee. This definition shall be interpreted consistent with the definition of "employee" herein and the definition of "employer" under 29 U.S.C. 203(d) of the Fair Labor Standards Act, including any exemptions thereto under said act applicable to employment in Rhode Island.

E) "Fringe Benefit" means a benefit that is granted by an employer to an employee by company policy that involves a monetary cost such as holiday pay, vacation pay, health insurance, bona fide pension plans, etc. Benefits required by law such as workers compensation, unemployment premiums and matching social security are not considered "fringe benefits" and cannot be used as a credit against the fringe benefit portion of the rate. Authorized fringe benefit credits may be deducted from prevailing wages owed pursuant to Regulation 17.

F) "Fringe Benefit Credit" means the amount identified as "Fringes" for the trade on the General Wage Decisions (Davis-Bacon Wage determinations).

G) "Heavy Construction"
   1) "heavy construction" means those construction projects that are not properly classified as either "building", "highway", or "residential". Projects within the heavy classification are distinguished on the basis of their particular project characteristics, like complex engineering and industrial nature, and separate wage determinations;

   2) Examples of heavy construction include, but are not limited to power plants, pipelines, mass transit lines, marine and port facilities, sewage and solid waste facilities, landfills wastewater treatment facilities, sanitary, storm and sewer facilities, water supply facilities, transmission lines, aqueducts, water treatment facilities, desalination plant facilities, dams and reservoirs and the laying of fiber optic cable.

H) "Independent Contractor" means any natural person, business, corporation or entity of any kind that provides goods or services to another and that does not qualify as an "employee" as provided for herein.

I) "Prevailing Wage" means the Base Hourly Rate of Pay plus the Fringe Benefit Credit which are listed on the General Wage Decisions (Davis-Bacon Wage Determinations) developed by the U.S. Department of Labor and adopted by the Rhode Island Department of Labor and Training.

J) "Prevailing Wage Law" means R. I. Gen. Laws § 37-13-1, *et seq.*

K) "Principal" is a person who has a majority of the ownership of a business, firm or corporation.

L) "Public Agency" means the State of Rhode Island, any awarding agency or authority of the State of Rhode Island, those agencies listed at R. I. Gen. Laws § 37-13-7(d), any Rhode Island city, town or village or any division of same, or any person or other entity acting on behalf of any public agency as defined herein.

M) "Public Work"

1) "public work" means grading, clearing, demolition, improvement, completion, repair, alteration or construction on any public site;

2) "public work" does not include:

i) grading, clearing, demolition, improvement, completion, repair, alteration or construction on any public site for which no salary or wages or in kind payments are paid or owed;

ii) ordinary maintenance work performed on a regularly scheduled basis (e.g., daily, weekly, monthly, seasonally, semiannually or annually) or on a routine basis to service, check, or replace items or parts that are not broken.

N) "Public Works Contract"

1) "public works contract" means any contract, purchase order, or any other legal agreement, in writing, for any public work or heavy construction on a public site to be performed by a public contractor on behalf of a public agency for a fixed or determinable amount of One Thousand Dollars or more ($1,000);

2) payments made through contracts with third parties on behalf of a public agency shall be deemed public works contracts if public funds are utilized.

O) "Public Works Contractor" means the prime contractor, and each and every subcontractor, performing public work or heavy construction on any public works project site.

P) "Public Works Project" means public work or heavy construction work at any public works site for a public purpose for which the prevailing wage law applies.

Q) “Public Works Site”

1) “public works site” means the physical place or places, but not a privately owned residence where the heavy construction or public work called for in the public works contract takes place or will remain and is owned or will be owned by the public agency;

2) the physical place(s) where the public work or heavy construction is to occur also means other adjacent or nearby property used by the public works contractor or subcontractor which can reasonably be said to be included in the public works site;

3) physical place(s) which are not owned by a public agency but which are developed under contract and in anticipation of being owned by a public agency shall be considered a public works site.

R) “Residential Construction” means projects consisting of single family homes and apartments up to and including four (4) stories.

S) “Successor in interest” is one who continues to retain the same right, control or interest in a new business, firm, or corporation which purchased or merged with a former business, firm or corporation.

Appendix A

RI Department of Labor and Training - Division of Workforce Regulation & Safety
Professional Regulation Unit/Prevailing Wage Section
1511 Pontiac Avenue Building 70, P.O. Box 20247 Cranston, RI 02920-0943

Rhode Island Certified Weekly Payroll

Contractor: _____ **Subcontractor:** _____

Address: _____ **Address:** _____

City/Town: _____ **State:** _____ **Zip:** _____ **City/Town:** _____ **State:** _____ **Zip:** _____

Phone #: _____ **Email:** _____ **Phone #:** _____ **Email:** _____

For Week Ending: _____ **Project/ Location:** _____ **Wage Decision #:** _____ **Decision Date:** _____

Name, Address and Phone Number of Employee	Work Classification / Apprentice %	Date:	S	M	T	W	T	F	S	Total Hrs	Hourly Rate	Hourly Fringe Benefit	Gross	Deductions: Social Security	Medi-care	Withheld: Federal	Withheld: State	RI TDI	*Other	Net
			Hours Worked Each Day																	
		P.S.																		
		P.O.																		
		R.H.																		
		R.O.																		
		P.S.																		
		P.O.																		
		R.H.																		
		R.O.																		
		P.S.																		
		P.O.																		
		R.H.																		
		R.O.																		
		P.S.																		
		P.O.																		
		R.H.																		
		R.O.																		
		P.S.																		
		P.O.																		
		R.H.																		
		R.O.																		

Legend: P.S.=Prevailing Wage Standard Hours P.O.=Prevailing Wage Overtime Hours R.H.=Regular Hours R.O.=Regular Overtime Hours

***Note**: Deductions reported in the "other" column must be listed.

STATEMENT OF COMPLIANCE

I, _____ do hereby state:
(print name and title of signatory party)

(1) That I pay or supervise the payment of the persons employed by: _____
(contractor or subcontractor)

on the _____, that during the payroll period commencing on
(project)

_____ day of _____, 20 _____, and ending on the _____ day of _____, 20 _____
(day) *(month)* *(year)* *(day)* *(month)* *(year)*

all persons employed on said project have been paid the full weekly wages earned, that no rebates have been or will be made either directly or indirectly to or on behalf of said _____ from the full weekly wages earned by any person and that no deductions have been
(contractor or subcontractor)

made either directly or indirectly from the full wages earned by any person, other than permissible deductions as defined in Rhode Island General Law Chapter 28-14.

(2) That any payrolls otherwise under this contract required to be submitted for the above period are correct and complete; that the wage rates for laborers or mechanics contained therein are not less than the applicable wage rates contained in the appropriate wage determination for the project; that the classifications set forth therein for each laborer or mechanic conform with the work they performed.

(3) That the apprentices employed in the above period are duly registered in a bona fide apprenticeship program registered with the Rhode Island State Apprenticeship Council.

(4) That: **(a) WHERE FRINGE BENEFITS ARE PAID TO APPROVED PLANS, FUNDS OR PROGRAMS**

In addition to the basic hourly wage rates paid to each laborer or mechanic listed in the above referenced payroll, payments of fringe benefits as listed in the contract have been or will be made when due, to appropriate programs for the benefit of such employees.

Fringe Benefits Explanation: Bona fide fringe benefits are those paid to approved plans, funds or programs except those required by Federal or State Law.

Please specify the type of benefits provided:

1.) Medical or hospital care: _____

2.) Pension or Retirement: _____

3.) Life Insurance: _____

4.) Disability: _____

5.) Vacation, sick, holiday: _____

6.) Other (please specify): _____

(b) WHERE FRINGE BENEFITS ARE PAID IN CASH

Each laborer or mechanic listed in the above referenced payroll has been paid as indicated on the payroll, an amount not less than the sum of the applicable basic hourly wage rate plus the amount of the required fringe benefits as listed in the rate schedule.

(5) In accordance with Chapter 37-13-13, it is mandatory that contractors use these forms for all Rhode Island Department of Labor requests for certified copies of payroll. Failure to submit information on these forms will constitute non-compliance by the responding contractor. These forms must be signed by the owner or an officer of the corporation, certifying that this is a true and exact copy of their payroll records.

PLEASE PRINT Name and title of owner or officer of the corporation

_____

SIGNATURE **DATE**

The willlful falsification of any of the above statements any subject the contractor or subcontractor to a $100 per day fine and be deemed guilty of a misdemeanor.

Appendix B

RI Department of Labor and Training
Division of Workforce Regulation & Safety
Professional Regulation Unit/Prevailing Wage Section
1511 Pontiac Avenue Building 70, P.O. Box 20247 Cranston, RI 02920-0943

Page:_____

Rhode Island Certified Prevailing Wage Daily Log

Project Name:_____ Date:_____

Project Location:_____ Contractor: _____

Print Name	Employer	Job Title/ Classification	Time		Signature
			In	Out	

I _____ hereby certify that the information in this form is complete and correct.
(print name and title of signatory party) Any contractor who knowingly maintains a false or fraudulent daily log may be penalized by the Department of Labor and Training up to $500 for each calendar day of noncompliance.

_____ _____
Contractor/Officer's Signature Date

SECTION 01000

GENERAL REQUIREMENTS

SECTION 01000
GENERAL REQUIREMENTS

Summary of Work

1.1 GENERAL

1.1.1 Work under this contract shall be the responsibility of the CONTRACTOR, and shall be performed in accordance with the Contract Documents. The CONTRACTOR shall provide all construction and applicable services required for the Replacement/Rehabilitation of Water Mains and Appurtenances, including the replacement of lead water services and the associated **full depth temporary asphalt restoration** of street excavations and **permanent restoration of street excavations at intersections, sidewalks and grassy areas**, complete, in-place, and accepted.

1.1.2 The CONTRACTOR shall perform all work in a workmanlike manner, with due diligence and in a continuous and uninterrupted manner. All the work, labor and materials to be done and furnished under the Contract shall be done and furnished strictly pursuant to, and in conformity with, the directions of the OWNER as given from time to time during the progress of the work. All requests to perform such work are subject to the terms and conditions set forth in the bargaining union agreement, and any other agreement, between the City of Providence, Providence Water, and the Laborers' International Unions of North America, AFL-CIO Local 1033. The OWNER shall determine the amount, quality, acceptability, and fitness of all parts of the work completed.

1.1.3 The CONTRACTOR shall be required to designate at least one individual who shall be responsible to receive and respond to all emergency calls, pertaining to ongoing or completed project work performed by the CONTRACTOR, during the life of the contract. The individual(s) shall be available seven (7) days a week, twenty-four (24) hours a day. The CONTRACTOR shall respond to the emergency immediately and commence emergency repair work at the job site within **one (1) hour** of being notified by the OWNER.

1.1.4 The CONTRACTOR shall perform all work in compliance with a11 federal, state, and local laws, ordinances, rules, and regulations having any jurisdiction or authority over the work.

1.1.5 Unless otherwise stated, all aspects of street and sidewalk restoration work performed within the contract, shall be performed in accordance with the Standard Specifications for Road and Bridge Construction, RIDOT, latest edition.

1.1.6 The OWNER reserves the right to perform all or part of the work, to direct another CONTRACTOR or other CONTRACTORs to perform all or part of the work.

1.1.7 The OWNER reserves the right to direct or limit the amount of labor and/or

equipment being utilized on the project at the OWNER's expense, if the OWNER, at its sole discretion, deems that the labor and/or equipment being utilized is either in excess or deficient of that needed to successfully, economically, and efficiently completes the project work.

1.2 CRIMINAL BACKGROUND CHECK (BCI)

1.2.1 The successful bidder is required to submit all names of all employees who will be performing work on behalf of the OWNER. The successful bidder, at no cost to OWNER, is required to perform a National BCI check on those employees. The OWNER requires a sworn notarized affidavit that the named employees performing the work have successfully passed a National BCI check. As new employees, and or subcontracted employees are hired, a National BCI check must be performed for each individual. The CONTRACTOR must submit an updated BCI screening list prior to them performing work for the OWNER. The successful bidder is responsible for the professional behavior of their employees and SUBCONTRACTOR employees while working at the OWNER's job site.

1.2.2 In the event of mitigating circumstances or blemishes found on the BCI, the OWNER may consider granting an exemption. Exemptions are considered on a case by case basis, once all parties agree to release the BCI results to the OWNER. The OWNER's executive panel will review all exemption requests and make a determination.

1.3 LOCATION OF WORK

1.3.1 All work under this contract is located within the OWNER's transmission and distribution system and on private property, where property owner(s) have agreed to respective portions of the work.

1.3.2 The proposed water main rehabilitation work, under this contract, will consist of the following:

- Cleaning and lining of cast iron water mains along multiple streets
- Small sections of new water main extensions
- Tie-ins
- New valves
- New hydrants
- Lead service replacements

SECTION 01000
GENERAL REQUIREMENTS

1.4 DESCRIPTION OF WORK

1.4.1 The work covered under this contract includes (except as hereinafter otherwise specified) furnishing all labor, materials, equipment, tools, services, uniformed traffic control and flagpersons, and incidentals required for the excavation of trenches and/or pits; for the removal and disposal of existing water main pipe segments and fittings, valves, hydrants, lateral services, lead services, abandoned services, and blow-off and/or bleeder assemblies, and/or other miscellaneous items as indicated within the Contract Documents, or as otherwise directed by the OWNER; for the cleaning and cement lining of existing cast iron water mains; for the installation, testing and disinfection of new ductile-iron water main piping and fittings, valves, hydrant assemblies and blow-off assemblies associated with the overall water main replacement/rehabilitation work; for the installation of new copper services associated with replacing existing lead services within the Public Space; for copper service reconnections; for the installation, testing and disinfection of ductile-iron service laterals and valves; and/or other miscellaneous items as indicated within the Contract Documents, or otherwise directed by the OWNER; for backfilling and compaction; **for "full depth asphalt" restoration with 2" mill and overlay of street excavations and typical permanent restoration of excavations within sidewalks and driveways**; for interim and final clean-up; and miscellaneous, related, or incidental work required or otherwise necessary to satisfactory complete the work in accordance with the Contract Documents or otherwise directed by the OWNER.

1.4.2 In the Public Space, the CONTRACTOR shall replace the designated lead water service from the water main to the curb stop, including tapping the new corporation stop; installing the new corporation stop; the new copper tubing water service; the new curb stop and box; and connection to the existing Private water service piping.

1.4.3 In Private Property, should the property owner execute a Private Lead Service Replacement Agreement with Providence Water (OWNER), OWNER may direct the CONTRACTOR to replace the private side lead service as part of this Contract at the unit prices bid in Part 3 of the Bid Form. Should such an agreement be made, the CONTRACTOR shall replace the lead service from the curb stop to the water meter assembly (Internal Plumbing) in the building with new, continuous copper tubing; furnish and install the internal plumbing comprised of ball valves, pressure reducing valve (if required), backflow prevention device, expansion tank (if required); all necessary copper tubing/pipe, fittings, and appurtenances; all in accordance with OWNER requirements. The CONTRACTOR shall notify OWNER at least 48 hrs. prior to the replacement work so that OWNER can schedule inspection coverage. All internal plumbing shall be installed under the direction of a licensed Master Plumber.

1.4.4 In Private Property, exterior obstructions such as porches, walls, landscape features, planting etc. may require tunneling by moling or hole-hogging to replace the lead service.

1.4.6 For properties where OWNER directs CONTRACTOR to replace the private side lead service line, the CONTRACTOR shall accomplish both the Public and Private lead service replacement at the same time, no exceptions. Partial replacements of the public and private side lead services, at separate times, will not be allowed.

Allowances

2.1 EXTRA WORK

Work will be performed and paid for under the Contract Price, including but not limited to all submittals, permits, and services specified and required. No allowances for extra work will be made unless specifically authorized in writing by the OWNER.

2.2 CLAIMS FOR DAMAGES

2.2.1 If the CONTRACTOR makes claim for any damages alleged to have been sustained by breach of the contract or otherwise, he shall, within ten (10) days after occurrence of the alleged breach or within ten (10) days after such damages are alleged to have been sustained, whichever date is the earlier, file with the OWNER, an itemized written statement in triplicate of the details of the alleged breach and the details and amount of the alleged breach and the details and amount of the alleged damages. The CONTRACTOR agrees that unless such statement is made and filed as so required, his claim for damages shall be deemed waived, invalid and unenforceable, and that he shall not be entitled to any compensation for any such alleged damages.

2.3 OWNER’S INSPECTION

2.3.1 The CONTRACTOR shall make allowances for the OWNER to inspect and/or test the CONTRACTOR's work at any and/or all times at the OWNER's discretion.

2.3.2 The OWNER will appoint an Inspector to inspect all materials and workmanship and to see that the work conforms with the specifications and drawings. The failure of the Inspector to reject or condemn improper materials and workmanship shall not prevent the OWNER from rejecting materials and workmanship found defective at any time prior to the final acceptance of the completed work, nor shall it be considered as a waiver of any defects which may be discovered later, or as preventing the OWNER at any time subsequently from recovering damages for work actually defective.

2.3.3 The CONTRACTOR shall provide sufficient, safe and proper facilities at all times for inspection.

2.3.4 The CONTRACTOR shall furnish the Inspector with every reasonable facility for examining and inspecting the work and for ascertaining that the work is being performed in accordance with the requirements and intent of the Contract Documents, even to the extent of requiring the uncovering of portions of finished work by the CONTRACTOR.

2.3.5 Should the work thus uncovered prove satisfactory, the cost of uncovering and the replacement thereof shall be considered as extra work and the costs associated shall be borne by the OWNER. Said costs shall be borne by the CONTRACTOR if the original work was done in violation of the Contract, in the absence of the Inspector, or without the OWNER's written authorization. Should the Work uncovered prove unsatisfactory, said cost shall be borne by the CONTRACTOR.

2.3.6 If in the sole judgement of the Inspector, the CONTRACTOR is not employing sufficient labor, plant, equipment or other means to complete the work within the time specified, the OWNER may, after giving written notice, require the CONTRACTOR to employ such additional labor, plant, equipment and other means as the Inspector deems necessary to enable the work to progress properly.

3.1 WORK NOT PAID FOR SEPARATELY

3.1.1 Delivery

3.1.1.1 Payment for equipment delivery, storage or freight is included in the prices for the various items in the Bidder's Blank, and therefore no other separate payment will be made.

3.1.2 Bonds

3.2.2.1 Payment for bonds required by the contract is included in the prices bid for the various items of work in the Bidder's Blank, and therefore, no separate payment will be made.

3.2.3 Permits and Licenses

3.2.3.1 Payment for permits and/or licenses required by the contract are included in the prices bid for the various items of work in the Bidder's Blank, and therefore no separate payment will be made.

3.2.3.2 Reference is hereby made to Article 9.2, Permits, of this section of the Contract Specifications for permits required by municipalities.

Unit Prices

4.1 The Bidder shall provide unit prices for the hourly rates for Labor, Equipment, and Traffic Control, and Material, SUBCONTRACTOR, and Escalation (labor and equipment) cost markup percentages in the Bidder's Blank. Unit prices and cost markup percentages in the Bidder's Blank shall be used for partial payments for any changes and/or additions to the original scope of work. Reference is made to Part 4 and Part 5 of the Bid Schedule for the applicable contract unit bid items.

4.1.1 Original invoices for Materials and SUBCONTRACTOR cost shall be submitted to OWNER with the respective application for payment.

Product Alternates or Equals

5.1 PRODUCT ALTERNATES / EQUALS

5.1.1 The contract is based on the standards of quality established by the Contract Documents. Alternatives and substitutions will be considered as specified at the time of the bid submittal or when requested by the CONTRACTOR during the progress of the work.

5.1.2 It is the sole responsibility of the CONTRACTOR to show that the proposed alternative meets the requirements of the Contract Documents and is equal in quality, performance, reliability, durability, etc. to the OWNER's satisfaction. The CONTRACTOR shall submit, for the OWNER's approval, all documentation and materials necessary to substantiate the request.

5.1.3 Alternate materials, equipment, methods, etc., shall not be used or incorporated into the work until approved in writing by the OWNER.

5.1.4 Where the phrase "approved substitute or equal" appears in the Contract Documents, the CONTRACTOR shall submit, for the OWNER approval, all documentation and materials necessary to substantiate the request for the proposed item meets or exceeds the requirements of the Contract Documents. The CONTRACTOR shall not assume that an item will be an approved substitute unless written approval is received from the OWNER.

5.1.5 The decision of the OWNER will be final on all alternatives, substitutions and "approved substitutes or equals."

Modification Procedures

6.1 CHANGE ORDERS

6.1.1 No payment beyond the original Contract Price will be considered unless authorized in advance in writing by the OWNER. Changes in the original Contract Price may only be made by written Change Order from the OWNER.

6.1.2 Should the OWNER desire a change in the scope of work, the OWNER will issue a written change notice to the CONTRACTOR describing the scope of work of the desired change. The CONTRACTOR will review this notice and meet with the OWNER to finalize the scope of work. After the scope of work has been finalized and compensation determined in accordance with the General Conditions of the Contract Documents, the OWNER will issue a written Change Order to the CONTRACTOR to proceed with the work.

6.1.3 Should the CONTRACTOR discover a discrepancy or circumstance suggesting a change in the original scope of work, he shall immediately notify the OWNER in writing of the proposed change, describing the proposed change and its consequences. The OWNER will review information provided by the CONTRACTOR and determine if a Change Order is warranted. If the OWNER determines that a Change Order is warranted, the procedure in Paragraph 6.1.2 above will be followed; if the OWNER determines that a Change Order is not justified, he will notify the CONTRACTOR in writing.

6.1.4 Change Orders will be dated and numbered, describing the change in work and reasons for the change, and will stipulate the change in Contract Price.

Coordination

7.1 COORDINATION

7.1.1 Coordination of the work with the OWNER's operation of the facility during construction, with any SUBCONTRACTORS, and with any agencies or authorities having jurisdiction over the project or any part shall be the responsibility of the CONTRACTOR.

7.1.2 Coordination of meetings shall be the responsibility of the OWNER’s Project Manager.

7.2 NOTICES

7.2.1 It shall be the CONTRACTOR's responsibility to provide sufficient notice to all businesses, property owners, etc., of any anticipated disruption of access to businesses or properties resulting from work performed under this contract. The CONTRACTOR shall also be responsible for notifying schools, places of worship, police departments, fire departments and/or any other agencies as may be required by the City, Town or State.

7.2.2 **45 Day Notices**. The OWNER shall mail to all property owners (with both lead & copper public sides) within the scope of work, a notification letter of the CONTRACTOR's proposed schedule for water main rehabilitation. Time permitting, the letter shall be sent at least 45 days prior to the public side lead service replacement work. The "45 Day Notification Letter" shall advise the property owner of the upcoming scheduled work activities, notify the property owner that a lead service potentially exists at their location, and ask the property owner if he/she is interested in a cost estimate for the work, allowing the CONTRACTOR to replace their private side lead service **at the property owner's cost**. The "45 Day Notification Letter" includes the following attachments:

a. A Form, to be completed and returned to the OWNER, indicating whether or not the property owner is interested in replacing their private side lead service.
b. "Deciding Whether to Replace Your Lead Service"
c. "Partial Lead Service Replacement ADVISORY"
d. "How to Reduce Lead in Your Drinking Water"

7.2.3 **14 Day Notices**. The OWNER shall distribute a "Construction Notification Advisory" to all building occupants who will be impacted by the CONTRACTOR's upcoming planned work, 14 days prior to start of actual construction activities. The "14 Day Notification Letter" shall advise the occupants as to what construction activities will occur, the name of the CONTRACTOR performing the work, and contact numbers for the occupants to call to request information or to report any issues or a concerns.

7.2.4 **72 Hour Notices**. The CONTRACTOR shall distribute an "Important Notice" to each building, which will be impacted by the CONTRACTOR's construction activities, 72 hours prior to the CONTRACTOR performing work at said address. Blank "72 Hour Notification" notices will be furnished by the OWNER to the CONTRACTOR. The CONTRACTOR shall provide accurate emergency contact information on the notices prior to distribution.

7.2.5 **24 Hour Notices**. The CONTRACTOR shall distribute "Shutdown Notices" to each building, which will have their water service temporarily shut off as a result of the CONTRACTOR's construction activities, 24 hours prior to the CONTRACTOR shutting off the occupant's water. Blank "24 Hour Shutdown" notifications will be furnished by

the OWNER to the CONTRACTOR. The CONTRACTOR shall provide accurate "Date", "Time of Shutdown", and "Duration of Shutdown" information on the notices prior to distribution.

7.2.6 Consumers of OWNER's potable water shall not be deprived of their water supply for an unreasonable or extended period of time, as determined by the OWNER. The closure or disconnection of existing water services, which results in the actual shutdown of water service to occupied homes or buildings, as required for the installation of a temporary service or a new, permanent, copper water service, shall not be performed before 8:30 AM., unless otherwise approved and coordinated with the property owner and/or tenant.

7.2.7 The CONTRACTOR shall provide the OWNER at least a seventy-two (72) hour notification of any start of construction work or water shutdown. Twenty-four (24) hours prior to a water main or service shutdown, the CONTRACTOR shall provide written notice to affected OWNER's customers. The OWNER shall determine if the operation of valves will be performed by OWNER'S work forces, the CONTRACTOR, or an OWNER's SUBCONTRACTOR with the OWNER's permission or at his direction. At no additional cost to the OWNER, the CONTRACTOR is allowed to operate valves for purposes of water main shutdown under this contract. Whereupon the CONTRACTOR is unable to shutdown a valve after two (2) hours of attempting to do so, OWNER will direct the CONTRACTOR as to how to proceed. See Section 5000 – Utility Piping, Article 7.13, Operation of Valves for additional procedures and requirements.

7.2.8 All CONTRACTOR valve operation must be under the direct supervision of an OWNER's representative. **The immediacy of water main shutdowns or valve operation is not warranted by OWNER.** In the operation of valves, for the purpose of shutting down existing mains, OWNER does not guarantee or imply that shut down will be completely effective in stopping the flow of water to open ends. The CONTRACTOR must notify OWNER and/or its representative of all problematic valves. Ultimately, the OWNER will make the determination on whom will accomplish the valve repair or replacement, as delineated in Section 5000 – Utility Piping, Article 7.13, Operation of Valves.

7.2.9 It is the CONTRACTOR's responsibility to coordinate, interact with, and resolve property owner/resident inquiries and issues. The OWNER shall monitor CONTRACTOR and property owner/resident interactions and assist when required.

7.2.10 Further, whereupon a home or building cannot be flushed subsequent to the lead service replacement, a special "red" door-hanger style notice, as provided by the OWNER, will be delivered by the CONTRACTOR and placed at the home or building.

7.3 DIG SAFE

7.3.1 Prior to the start of work, and in accordance with the rules and regulations of Dig Safe, the CONTRACTOR shall notify Dig Safe (**Tel. 1-800-344-7233**) for the location and marking of all underground utilities in the work area.

7.3.2 The CONTRACTOR is to comply with all current Dig Safe Regulations.

7.4 STREET CLOSINGS

7.4.1 All emergency and/or extended street closings shall be reported to the proper City, Town, or State Authorities by the CONTRACTOR.

7.4.2 No portion of any street shall be closed to traffic unless written permission of the proper Civil Authorities has first been obtained. Reference is made to Article 9.2 "PERMITS" for specific provisions which relate to street closing permits within the City of Providence.

7.4.3 Trench repairs, paving operations, or other work involving a street and/or intersection, shall be so worked that no more than one-half of the street and/or intersection is blocked at any time.

7.5 PERMANENT "FULL DEPTH ASPHALT" STREET PAVEMENT RESTORATION

7.5.1 With the exception of driveways, and sidewalks where typical trench restoration will be required (i.e. placement of two (2) inch temporary hotmix pavement, 60-day settlement period, re-sawcutting trench edges, and placement of final asphalt paving courses), the CONTRACTOR will be completing full depth pavement restoration and after 60-days 2" mill and overlays of street sections disturbed under this Contract for water main replacement or rehabilitation.

7.5.2 As directed by the OWNER, the CONTRACTOR shall install sufficient asphalt pavement to match the existing pavement thickness (no less than four (4") inches of pavement shall be installed). To account for settlement, the CONTRACTOR at his discretion (and at no additional expense to the OWNER) may install a two (2") inch temporary pavement and then remove it to apply full depth pavement after a settlement period.

7.5.3 For pavement with a concrete base, the CONTRACTOR will be responsible for the concrete restoration in their excavations (utilizing contract unit rates in Part 1 of the Bid Schedule), as specified in "Section 08000 - Paving, Surfacing, and Permanent Repairs to Streets and Sidewalks."

7.6 SIDEWALK, DRIVEWAY, AND STREET PAVEMENT MANTENANCE AND WARRANTY

7.6.1 The CONTRACTOR will be held responsible for any pavement failures due to settlement or failures associated with his excavations, for a period of five (5) years from the date of the pavement's installation and acceptance.

7.6.2 If, at any time during the five (5) year period following final acceptance of paving work under this contract, **any part of the paving or surfacing work** which, in the opinion of the OWNER, requires replacement, repair, or remedial action to damaged private or public property (caused by any defect in the paving work), the OWNER will require the CONTRACTOR to make the necessary repairs or replacement to the OWNER's satisfaction within ten (10) days of notification.

7.6.3 At the OWNER's discretion, the OWNER may employ other persons to make such repairs and replacement. The CONTRACTOR agrees, upon demand, to reimburse the City all amounts expended for such repairs or replacements.

7.6.4 Failure to meet the warranty requirements constitutes a breach of contract.

Quality Assurance

8.1 QUALITY ASSURANCE

8.1.1 The CONTRACTOR shall use skilled workman and equipment of adequate size and capacity to assure proper performance of all work.

8.1.2 The CONTRACTOR shall comply with the requirements of any agency or codes having jurisdiction over the work.

Field Engineering

9.1 FIELD ENGINEERING

9.1.1 Field engineering, including establishing and maintaining all lines, grades, elevations, measurements, and other items specified, shall be the sole responsibility of the CONTRACTOR.

9.1.2 The CONTRACTOR shall employ a competent engineer/surveyor, to establish all lines, elevations, referenced marks, batter boards, etc., needed by the CONTRACTOR during the progress of the work, and from time to time to verify such marks by instrument or other appropriate means.

9.1.3 The CONTRACTOR shall make, check, and be responsible for all measurements and dimensions necessary for the proper construction of and the prevention of misfitting of work.

9.1.4 The OWNER shall be permitted at all times to check the lines, elevations, reference marks, batter boards, etc., set by the CONTRACTOR, who shall correct any errors in lines, elevations, reference marks, batter boards, etc., disclosed by such check. Such a check shall not be construed to be an approval of the CONTRACTOR's work and shall not relieve or diminish in any way the responsibility of the CONTRACTOR for the accurate and satisfactory construction and completion of the entire work.

9.2 The CONTRACTOR shall provide such field engineering services as may be required to properly complete the work to the OWNER's satisfaction.

Regulatory Requirements

10.1 REGULATORY REQUIREMENTS

10.1.1 Work and materials under this contract shall conform to all applicable federal, state, and local codes and requirements. The CONTRACTOR shall obtain and pay for any and all permits which may be required, and make arrangements for and coordinate any required inspections.

10.1.2 Materials, equipment, and workmanship shall meet all industry standards and be subject to inspection and testing by the OWNER and/or his authorized representatives, and the OWNER and his authorized representatives will at all times have access to the work.

10.1.3 The CONTRACTOR shall provide proper and safe facilities and equipment necessary for inspection, testing, access and observation of the work by the OWNER and his authorized representatives, and any agencies having jurisdiction over the work. The CONTRACTOR shall cooperate and provide assistance as required.

10.1.4 Except as otherwise specified herein, the CONTRACTOR shall provide all testing necessary to make certain that work is in conformance with the Contract Documents.

10.1.5 CONTRACTOR shall adhere to the requirements outlined in the RI DWSRF Program Construction Specifications.

10.2 PERMITS

10.2.1 At no additional cost to the OWNER, the CONTRACTOR shall be responsible for obtaining all permits and their associated fees from City, Town, or State authorities. CONTRACTORs must supply OWNER with copies of all permits prior to starting work. Anticipated permits are Street Opening Permits, Sidewalk Opening Permits, Construction Street/Sidewalk Closing Permits, and No-Parking Permits.

10.2.2 Street Opening Permits and Sidewalk Opening Permits - The OWNER has made arrangements with each municipality, Providence, Cranston, North Providence, and Johnston for Street and Sidewalk Opening Permits. The City of Providence is allowing permits to be acquired based on each city block of a street regardless of the number of openings within that city block. The CONTRACTOR will be supplied GIS Maps of impending water main replacement/rehabilitation and lead service replacement locations that must be included with each permit application in Providence, Cranston, North Providence, Johnston, and East Smithfield.

10.2.3 The CONTRACTOR is responsible for obtaining authorization for street closures from municipalities. Whereupon the CONTRACTOR requires a street closing as discussed under Article 7.4 "STREET CLOSINGS" of this section of the Contract Specifications, the CONTRACTOR may be required to obtain a "Construction Street/Sidewalk Closing Permit" from the City of Providence Department of Public Works – Traffic Engineering Division (or its equivalent in the other municipalities). When required and where directed, the CONTRACTOR will be responsible for the permit application and the associated fee required.

10.2.4 The CONTRACTOR shall be responsible for obtaining authorization/permits from municipalities to designate sections of roadways where "No-Parking" will be required. When required and where directed, the CONTRACTOR will be responsible for the permit application and the associated fee required.

10.2.5 Plumbing Permits – Each private side lead replacement will require a Plumbing Permit from each respective city or town. Plumbing Permit applications must be submitted by the CONTRACTOR's Master Plumber (ref. Part 3 of Bid Forms).

10.2.6 Winter Restrictions (Street and Sidewalk Opening Permits) – Typically, Department of Public Works have moratoriums on issuing permits in the winter months (November 15 through April 1). All excavations must be restored with hot mix asphalt and temporary pavement markings shall be furnished at disturbed locations, as an interim measure until permanent markings can be installed in a separate paving contract. The CONTRACTOR shall maintain these excavations, at no additional cost, throughout the winter season. OWNER does not allow cold patch for temporary trench restoration over winter. **The CONTRACTOR shall schedule work to allow for the removal of all temporary bypass piping and associated services no later than November 15th.**

11.1 REFERENCES

11.1.1	**AWWA**	American Water Works Association
11.1.2	**ASTM**	American Society for Testing and Materials
11.1.3	**ANSI**	American National Standards Institute
11.1.4	**PW**	Providence Water
11.1.5	**AASHTO**	American Association of State Highway and Transportation Officials

Project Meetings

12.1 PRECONSTRUCTION MEETINGS

12.1.2 After the award of the contract the OWNER will notify the CONTRACTOR of the time, date, and location of the Preconstruction Meeting.

12.1.3 The CONTRACTOR shall provide attendance by authorized representatives, including the project superintendent, and any major SUBCONTRACTORS.

12.1.4 The agenda will include, but not be limited to:

a. Discussion of Contract Documents.
b. Construction scheduling.
c. Submittal requirements, including shop drawings, insurance certificates, bonds, etc.
d. CONTRACTOR questions.
e. Channels and procedures for communication.

12.2 PROGRESS MEETINGS

12.2.1 Progress Meetings will be held as needed and requested by the OWNER. The times and locations will be determined by the OWNER.

12.2.2 The CONTRACTOR shall provide attendance by key representatives, including the project superintendent, and any required SUBCONTRACTORS or suppliers.

12.2.3 Progress meetings will be held to review the progress of the work, status of submittals, problems impeding the work and corrective actions, etc.

Submittals

13.1 SUBMITTALS

13.1.1 The CONTRACTOR shall provide submittals as requested by the OWNER and as required by the Contract Documents for OWNER approval, and make any required revisions and re-submittals necessary to establish compliance with the requirements of the Contract Documents.

13.2 DRAWINGS, PRODUCT DATA, AND CERTIFICATES

13.2.1 The CONTRACTOR shall submit eight (8) copies of all shop, detail or working drawings, product data and certificates required for the work, and the OWNER shall review them noting comments. Where re-submission is required, the OWNER will return only three (3) marked up copies. If required, the CONTRACTOR shall make corrections and resubmit eight corrected copies for final review and furnish such other copies as may be needed. The CONTRACTOR shall direct specific attention in writing to resubmitted drawings, data or certificates containing revisions other than those requested by the OWNER on previous submittals. A third submission from the same manufacturer will not be accepted.

13.2.2 Each letter of transmittal shall identify every item transmitted by title, revision number and date.

13.2.3 The OWNER's review of such drawings, data or certificates shall not relieve the CONTRACTOR from his responsibility in meeting the requirements of the Specifications, unless he had in writing called the OWNER's attention to any deviations from the requirements at the time of submission, and unless the OWNER issued a written waiver of the pertinent Specification.

13.2.4 Prior to submission of shop drawings to the OWNER for review, the CONTRACTOR shall stamp and sign the drawings to acknowledge that he has thoroughly examined the details, and checked all dimensions, and verified all field measurements as to confirm the proper fit of the equipment. The CONTRACTOR shall be fully responsible for the accuracy, proper fit, and coordination of all parts of the work. By stamping, signing, and submitting shop drawings, product data and certificates, the CONTRACTOR thereby represents that he has determined and verified all field measurements, materials, catalog numbers and similar data, and that he has thoroughly checked and coordinated each shop drawing with the requirements of the work and of the Contract Documents. Any submission which, upon examination by the OWNER, shows evidence of not having been thoroughly checked, or not in compliance with the provisions of this Section, will be returned to the CONTRACTOR for completion before it will be considered for review.

13.2.5 The OWNER generally will not check dimensions, quantities or schedules, except in cases where the information is lacking in the Specifications.

13.2.6 The OWNER's approval of a separate item shall not indicate approval of any assembly in which the item functions.

13.2.7 The OWNER's approval of drawings, data and certificates does not exempt the CONTRACTOR from the ultimate responsibility of providing safe, reliable, functioning systems as defined in this contract.

13.2.8 All drawings, data and certificates submitted shall be legible.

13.2.9 All drawings, data and certificates shall be properly identified as follows:

13.2.9.1 Date and revision dates.
13.2.9.2 Project title and number.
13.2.9.3 The names of:
13.2.9.3.1 CONTRACTOR
13.2.9.3.2 Manufacturer (if different)
13.2.9.4 Identification of product or material.
13.2.9.5 Relation to adjacent structure or materials.
13.2.9.6 Field dimensions, clearly identified as such.
13.2.9.7 Dimensions and clearances required.
13.2.9.8 Performance characteristics and capabilities shall accompany original shop drawing submittal.
13.2.9.9 Wiring diagrams and controls shall accompany original shop drawing submittal.
13.2.9.10 Installation instructions shall accompany original shop drawing submittal.
13.2.9.11 Specification section.
13.2.9.12 Applicable Standards, such as ASTM number or Federal Specification number.
13.2.9.13 Identification of deviations from the Contract Documents.
13.2.9.14 Identification of changes made since previous submittal.
13.2.9.15 Application of CONTRACTOR's stamp, initialed or signed, certifying the review of submittal, verification of field measurements and compliance with Contract Drawings.

13.2.10 All information not pertinent shall be removed from the submittal, or shall be crossed out.

13.2.11 No work which requires submittals shall be fabricated or purchased until return of submittals with the OWNER's stamp indicating approval.

13.3 INSTRUCTIONAL MATERIALS

13.3.2 The CONTRACTOR shall furnish five copies of all manufacturers' instructional materials known by such names as "Operating Manual," "Instruction Manual," "Repair Manual," "Operating Instructions," "Instruction Sheet," etc. as normally furnished by the manufacturer of each of the various pieces of equipment, covering operation and maintenance of the equipment. All five copies of the above manuals etc. shall be delivered directly to the main office of the OWNER for distribution.

13.3.3 If changes, revisions or insertions are required in the various publications after initial

delivery, the CONTRACTOR shall be responsible for all work and costs involved to complete such corrective measures as are required.

13.4 SCHEDULE OF SUBMITTALS

13.4.2 Immediately after the award of the contract, the CONTRACTOR shall provide the OWNER with a schedule of submittals, identifying all equipment, materials, etc. to be incorporated into the work requiring submittals. The OWNER shall review this and add or delete any items necessary; this shall then be used as a basis and log for CONTRACTOR's submittals. The OWNER retains the right to add to this schedule during the progress of the work.

13.5 PROJECT SCHEDULE

13.5.2 After notification of award and prior to start of work, the CONTRACTOR shall submit to the OWNER for approval his proposed construction sequence and schedule.

13.5.3 The schedule shall be in the form of a tabulation, chart, or graph and shall be sufficient in detail to show the chronological relationship of all activities of the project including, but not limited to, estimated starting and completion dates of various activities, submittal of shop drawings, procurement of materials, and scheduling of equipment. The schedule shall reflect completion of all work for the project within the specified time and in accordance with the specifications.

13.5.4 If the schedule fails to reflect actual progress, or if there are changes in the work, a revised schedule shall be submitted to the OWNER for approval.

13.5.5 The CONTRACTOR shall submit his proposed project schedule to the OWNER within ten (10) calendar days after the notification of award.

Construction Facilities and Temporary Controls

14.1 CONSTRUCTION FACILITIES AND TEMPORARY CONTROLS

14.1.1 The CONTRACTOR shall provide any temporary facilities, equipment, and appurtenances specified or necessary to properly complete the work.

14.1.2 Upon removal of any temporary facilities, equipment, or appurtenances, the CONTRACTOR shall restore the site, location, structure, etc. to its proper condition and make all necessary repairs acceptable to the OWNER.

14.1.3 The CONTRACTOR shall arrange work hours in accordance with the hours of the OWNER's personnel (8:30 a.m. to 4:30 p.m., Monday - Friday) so that access to the site can be coordinated with the OWNER. Hours worked by the CONTRACTOR's personnel beyond eight (8) hours per day (between the hours 7:00 a.m. to 4:30 p.m., Monday - Friday, excluding holidays) shall be deemed Overtime Hours.

14.1.4 Security and protection of work, materials, and equipment are the responsibility of the CONTRACTOR.

14.1.5 The CONTRACTOR shall confine all apparatus, materials, supplies, machinery, and equipment to areas designated or approved by the OWNER, and do not unreasonably encumber the premises/work site with such apparatus, materials, supplies, etc. Keep the premises/work site clean, neat and free of litter and promptly remove and dispose of all debris resulting from the operation. Confine operations to the property limits of the OWNER and do not infringe upon abutting properties; save the OWNER harmless from the claims of any abutting or adjacent property owners for damages resulting from operations. Upon completion of work, completely clean and restore the site to a condition acceptable to the OWNER.

14.1.6 Providing equipment and temporary facilities needed to perform and complete the work as required by the Contract Documents is the responsibility of the CONTRACTOR. Payment for such will be the sole responsibility of the CONTRACTOR.

14.1.7 In situations where the facility is owned by OWNER, the CONTRACTOR may, within reason, use power, water, and telephone available at the facility. The OWNER reserves the right to restrict this use to what is necessary and reasonable.

14.1.8 The CONTRACTOR shall provide its own office and storage facilities at the site, if needed.
The location of such facilities must be coordinated with the OWNER and subject to OWNER approval.

14.1.9 At the end of each day the CONTRACTOR shall remove all debris, stored material, equipment, and generally sweep the site(s), and all excavations shall be paved with temporary bituminous pavement or trench plated. Extensive use of trench plates overnight shall not be allowed.

14.1.10 Hot temporary bituminous pavement shall be used when available. The CONTRACTOR shall request approval from the OWNER to use bituminous cold patch. If cold patch is allowed, the CONTRACTOR shall compact and tamp the cold patch to minimize cold patch aggregate spread/movement, depressions, and

unraveling. The CONTRACTOR shall maintain the patch including sweeping and removal of disbursed aggregate. The use of cold patch is considered to be for the convenience of the CONTRACTOR and will not be paid for separately.

Materials and Equipment

15.1 MATERIALS AND EQUIPMENT

15.1.1 The CONTRACTOR shall be responsible for the protection of all equipment, materials, tools and labor during construction. Damage to equipment, materials and tools will be the CONTRACTOR's responsibility.

Safety

16.1 LIGHTS - BARRIERS - WATCHMAN

16.1.1 The CONTRACTOR shall provide and maintain such barriers and lights that will prevent accidents during the construction work.

16.1.2 The CONTRACTOR shall indemnify and protect the City and OWNER in every respect from any injury or damage whatsoever caused by any act or neglect of the CONTRACTOR or his SUBCONTRACTORS or agents.

16.1.3 In addition to the above, and when necessary, or when required by the City, Town, or State Authorities, the CONTRACTOR shall post signs and employ watchmen, flagmen, and/or policemen for the direction and control of all traffic during the construction work. With the exception of police and flagmen, the cost of said traffic control shall be borne by the CONTRACTOR. (Ref. Section 01150, Article 2.1.16)

16.1.4 The CONTRACTOR shall install barriers, barrels, cones, safety tape and other devices around the overall and individual work sites to bar and protect pedestrian and vehicular traffic.

16.2 PROTECTION OF ADJACENT FEATURES

16.2.1 It shall be the CONTRACTOR's responsibility to protect from damage all existing areas adjacent to his work. This shall include pavements next to a trench patch, lawns, trees, curbs, sidewalks, fences, shrubs, etc.

16.2.2 All damage to existing features or structures outside of the project limits shall be repaired and restored at no direct cost to the City if, in the opinion of the OWNER, said damage resulted from

the CONTRACTOR's operations.

16.2.3 The CONTRACTOR is advised that at certain lead service replacement locations, tree and/or tree roots may be in conflict with the service, curb stop and box replacement. The OWNER and CONTRACTOR shall coordinate in advance of the replacement to resolve the method and technique to be used in replacing the lead water service including notification to the individual municipalities' personnel having jurisdiction over the tree such as the City Forester, Tree Warden or Arborist. The municipality will evaluate the conflict and make recommendations for the protection, trimming, or removal of the tree and/or roots and branches, and stump grinding. The OWNER has engaged a Tree Service to provide these services. The CONTRACTOR shall coordinate with the Tree Service.

16.2.4 The CONTRACTOR shall protect all utilities and coordinate with the utility company should there be a conflict. Certain utilities such as National Grid have notification requirements for work done in proximity to cast iron gas mains. The CONTRACTOR shall notify National Grid of the location of a cast iron gas main that is exposed three (3) feet or more, of an exposed cast iron gas main bell and spigot, or of excavation eight (8) feet or greater and parallel to the cast iron gas main.

16.3 ELECTRIFIED WATER SERVICES AND WATER MAINS

16.3.1 Prior to cutting lead services, the CONTRACTOR shall test the water service or main for voltage. If voltage is present, the CONTRACTOR shall immediately notify the property owner, National Grid, and the OWNER. The lead water service shall not be replaced until the CONTRACTOR or OWNER is notified by National Grid that the stray electrical current has been eliminated.

16.4 PRE-CONSTRUCTION PHOTOGRAPHS

16.4.1 The OWNER shall take photographs from various positions and angles of water mains and individual lead service replacement addresses and other work sites subsequent to Dig Safe markings to indicate pre-construction conditions. The photographs are for the OWNER's use but can be acquired by the CONTRACTOR upon request.

16.4.2 The CONTRACTOR is advised to take pre-construction photographs/videos for their own purposes especially in conjunction with property owner discussions relative to property damage. Pre-construction conditions should be photo/video documented following the Dig Safe mark-out and before any materials are delivered and/or any work begins (i.e. bypass layout, saw cutting, and excavation). A digital copy of the photographs/videos shall be furnished to the OWNER upon request.

16.5 CUSTOMER CONTACT INFORMATION

16.5.1 Through the course of construction, the CONTRACTOR may obtain contact information from property owners, residents, and/or tenants in order to facilitate construction operations (particularly in relation to bypass piping and temporary service connections). CONTRACTOR shall tabulate this information in a spreadsheet, formatted with the following headings: name, owner/resident/tenant, address, phone number, and email (if available). A digital copy of this spreadsheet shall be furnished to the OWNER by the completion of construction or at other such intervals as requested by the OWNER.

Emergency Repairs

17.1 The CONTRACTOR shall be available to perform emergency repairs for all ongoing or completed project work by the CONTRACTOR under this contract, during the contract period and during the warranty period as per request of the OWNER.

17.1.1 The CONTRACTOR shall provide to the OWNER a list of personnel available for emergency repairs. The list shall include, as a minimum, home telephone numbers, cellular telephone numbers and/or pager numbers available 24 hours a day, 7 days a week.

17.1.2 The CONTRACTOR shall be required to designate to the OWNER at least one individual who shall be responsible to receive and respond to all emergency calls. The individual(s) shall respond to the emergency immediately and commence emergency repair work at the job site within **one (1) hour** of being notified by the OWNER.

17.1.3 The CONTRACTOR shall provide affected water service customers with a local telephone number to call in case of emergencies. The personnel available for emergency repairs shall be available 24 hours a day, 7 days a week.

17.1.4 The CONTRACTOR shall, at the time the contract is executed, submit a written statement acknowledging the responsibility as stated above and describing their plan for providing coverage for approval by the OWNER.

Facility Start-up/Commissioning

18.1 FACILITY START-UP/COMMISSIONING

18.1.1 Adjustments, testing and successful start-up of the water mains and appurtenances are the responsibility of the CONTRACTOR.

Contract Closeout

19.1 FINAL COMPLETION

19.1.1 When the CONTRACTOR believes that the project has been completed and is ready to be turned over to the OWNER, he shall request a final inspection from the OWNER in writing. In his letter the CONTRACTOR shall certify that:

a) He has inspected the work and it is complete in accordance with the Contract Documents.
b) Equipment and systems have been tested and are all operational.
c) The site has been cleaned of all debris and has been fully restored to an acceptable appearance.
d) All closeout submittals have been submitted.
e) Work is ready for final inspection.

19.1.2 The OWNER will inspect the work. If the OWNER determines the work is not complete, the CONTRACTOR will be notified in writing of defective or incomplete work. The CONTRACTOR will promptly remedy any deficiencies and request re-inspection.

19.1.3 When the OWNER determines the work is acceptable, he will request the CONTRACTOR to make closeout submittals.

19.2 CLEANUP

19.2.1 Upon completion of all operations, the CONTRACTOR shall promptly remove all unused materials, debris, etc., and shall leave all areas of work cleaned and restored to the original condition and to the OWNER's satisfaction.

19.3 OWNERSHIP

19.3.1 Any and all appurtenances installed under this agreement shall become the property of the OWNER upon completion and acceptance of paid work.

END OF SECTION

SECTION 01150

MEASUREMENT & PAYMENT

SECTION 01150
MEASUREMENT & PAYMENT

General

1.1 EXTENT OF WORK

1.1.1 Measurement

1.1.1.1 The quantities to be measured under the various items in the Bidder's Blank will be those quantities of work completed in accordance with the Specifications. The methods of measurement will be as stated hereinafter for the individual items.

1.1.1.2 All quantities, except for lump sum items, shall be unit priced and measured for payment to the nearest one-tenth of a unit.

1.1.2 Prices

1.1.2.1 The unit rates in the Bidder's Blank shall be full compensation for the work of the Contractor specified and shall include the cost of furnishing all labor, materials, equipment, and all work and expense incidental to and necessary to complete the work in accordance with the Specifications.

1.2 WORK NOT PAID FOR SEPARATELY

1.2.1 Delivery

1.2.1.1 Payment for equipment delivery, storage or freight is included in the prices for the various items in the Bidder's Blank, and therefore no other separate payment will be made.

1.2.2 Bonds

1.2.2.1 Payment for bonds required by the contract is included in the prices bid for the various items of work in the Bidder's Blank, and therefore no separate payment will be made.

1.2.3 Permits and Licenses

1.2.3.1 Payment for permits and/or licenses required by the contract are included in the prices bid for the various items of work in the Bidder's Blank, and therefore no separate payment will be made.

1.2.3.2 Permits required by Municipalities.

1.2.4 Primary Road Work

1.2.4.1 Additional payment for work along primary, state, major/minor arterial roadways or roadways with concrete base required by the contract shall be considered to be included in the prices bid for the various items of work in the Bidder's Blank, and therefore no additional compensation will be made.

Measurement

2.1 METHOD OF MEASUREMENT

2.1.1 PIPELINE SYSTEMS – PUBLIC SPACE

A. Ductile-iron Pipe: Buried ductile-iron pipes utilized for water main replacement, including ductile-iron service laterals, of the various sizes listed in the Bid Schedule (Item Nos. 1, 2, 3, 4, 5, 6), shall be measured for payment by the "Linear Foot" (L.F.), as measured along the centerline of the pipe, measured through all fittings and valves in the line, complete, in place and accepted by the OWNER.

B. Ductile-iron Fittings: Ductile-iron pipe fittings (e.g. pipe bends, tees, caps/plugs, etc.), including pipe couplings or solid sleeves for connections to existing water mains, as listed in the Bid Schedule (Item No. 7), shall be measured by the unit "pounds" (LBS.), for the number of pounds for the weight of fittings and couplings installed, complete, in-place and accepted by the OWNER. The measurement shall be based on the weight of the fitting or coupling, as provided by the standard fitting weights published in AWWA C153 and AWWA C219 for ductile iron compact fittings and couplings. There shall be no separate measurement for glands, joint restraints, or other appurtenances.

C. Gate Valves: Gate valves, of the various sizes listed in the Bid Schedule (Item Nos. 8, 9, 10, 11), shall be measured by the unit "Each" (EA.), for each gate valve installed, complete, in-place and accepted by the OWNER.

D. Fire Hydrant Assembly: New fire hydrant assemblies, as listed in the Bid Schedule (Item Nos. 12a and 12b), shall be measured by the unit "Each" (EA.), for each fire hydrant assembly installed at the designated locations, complete, in-place, as shown in the detail, and accepted by the OWNER.

E. Blow-off Assembly: New 2-inch blow-off assemblies, as listed in the Bid Schedule (Item No. 13), shall be measured by the unit "Each" (EA.), for each blow- off assembly installed at select locations at the ends of designated water mains, complete, in-place, as shown in the detail, and accepted by the OWNER.

2.1.2 SERVICE CONNECTIONS

A. Copper Tubing (Part 1 - Bid Schedule): The furnishing and installation of Copper Tubing to replace existing lead services with new buried water services within the Public Space, as listed in the Bid Schedule (Item Nos. 14a, 14b, 15a, 15b, 16a, and 16b) will be measured for payment by the unit "Linear Foot" (L.F.) of the actual number of linear feet of service tubing installed by either open-cut trench or trenchless technology means and methods, completed in place and accepted as part the assigned lead service replacement contract work.

B. Corporation Stops, Curb Stops, and Service Boxes (Part 1 - Bid Schedule) The furnishing and installation of Corporation Stops, (Saddles for 1-1/2" and 2" Services), Curb Stops, and Service Boxes, of the sizes indicated, as listed in the Bid Schedule (Item Nos. 14c, 15c, and 16c), will be measured by the unit "Each" (EA.), complete in place and accepted for each new water service installation associated with the water main rehabilitation, or at other locations as directed by the OWNER.

C. Copper Service Reconnections: The reconnection of existing copper water services, of the sizes listed in Part 1 of the Bid Schedule (Item Nos. 17a to 17d), will be measured by the unit "Each" (EA.), for each existing copper service that is reconnected to the new water main, complete in place and accepted.

D. Existing Lead Service Replacement:

i. Lead Service Removal: The removal and disposal of existing lead water services, removed by either open-cut trench or by trenchless technology at the designated public side and private side lead service replacement locations will not be measured for separate payment, but the cost thereof will be considered to be included with the unit bid prices for the lead service replacement work under Parts 1 and 3 of the Bid Schedule.

ii. Private Side Lead Service Abandonment: The abandonment of existing lead water service pipe, resulting from the relocation of the service or the use of a mole or tunneling device at designated private side lead service replacement locations will not be measured for separate payment, but the cost thereof will be considered to be included with the unit bid prices for the lead service replacement work under Part 3 of the Bid Schedule.

iii. Corporation Stop Closure and Curb Stop Removal: The closure or removal of existing service corporation stops, and the removal of existing curb stops and service boxes, will not be measured for separate payment, but the cost thereof will be considered to be included with the unit bid prices for the lead service replacement work under Part 1 of the Bid Schedule.

2.1.3 CLEANING AND LINING EXISTING WATER MAINS

A. The quantity for "Cleaning and Lining Existing 6", 8" and 12" C.I. Water Mains, as listed in the Bid Schedule (Item Nos. 18a to 18c), will be measured for payment by the unit "Linear Foot" (L.F.), along the centerline of the existing water mains that are actually cleaned and lined with the specified cement mortar thicknesses, complete and accepted at the designated street locations.

B. The quantity for "Obstructions, as listed in the Bid Schedule (Item No. 18d), will be measured for payment by the unit "Each" (EA.), for the actual number of each obstruction encountered and removed from the existing water main, as defined in Section 05200, Cleaning and Lining Water Mains, of these Contract Specifications.

2.1.3.1 EXPLORATORY VIDEO INSPECTION

The quantity for "Exploratory Video Inspection", as listed in the Bid Schedule (Item No. 33g), will be measured for payment by the unit "Linear Foot" (L.F.), as tracked / recorded in the video footage of the existing water mains at OWNER designated locations.

2.1.4 TEMPORARY BYPASS PIPING SYSTEMS

Temporary Bypass Piping: The furnishing and installation of temporary bypass piping, of the sizes listed in Part 1 of the Bid Schedule (Item Nos. 19a to 19c), including temporary services and hydrants, will be measured for payment by the unit "Linear Foot" (L.F.), for the actual laid length of temporary bypass piping, complete in place and accepted along each street location, to facilitate the removal and replacement of the existing water mains serving those areas. The furnishing of temporary services for each home or building, and the associated connections to the temporary bypass piping, and connections to other existing water mains with corporation stops, where necessary, will not be measured separately for payment.

2.1.5 EARTHWORK

A. Trench Excavation: The volume of trench excavation, as is required for the work specified under these Contract Specifications, shall not be measured separately for payment, but the costs thereof shall be considered to be included in the unit price bid for the applicable work items under "PIPELINE SYSTEMS," as described herein for the overall water main replacement work.

B. Gravel Borrow (Refill): Where, through no fault of the Contractor, sufficient suit- able materials from excavations are not available for backfill, or unsuitable

materials exist below the normal trench lines, gravel borrow from off-site sources shall be used for backfilling or refilling excavations. Gravel Borrow, as listed in Part 1 of the Bid Schedule (Item No. 20a), will be measured for payment by the unit "Tons" (TN), for gravel borrow in-place, compacted to the lines, grades and limits as directed by the OWNER.

C. Test Pits: Where and when directed by the OWNER, the Contractor shall excavate test pits to establish locations of existing pipelines or other buried structures. Test Pits, as listed in Part 1 of the Bid Schedule (Item No. 20b), will be measured for payment by the unit "Cubic Yards" (CY), for the volume of material excavated within the lines and limits, as ordered by the OWNER.

D. Dry-Hole Excavations (Part 4 - Bid Schedule): Whereupon an existing water main, service, plugged stub, or other appurtenant fitting is excavated for purposes of replacement, removal, or abandonment at select locations, as directed by the OWNER, and where, through no fault of the Contractor, it is determined that the existing service is constructed of copper pipe material, or a street marking location is determined to be incorrect, the Contractor will be compensated for the work associated with said excavations. Dry-hole excavations, as listed in the Bid Schedule (Item No. 33f), will be measured for payment by the unit "Each" (EA.) for each dry-hole excavation performed in the field as directed and approved by the OWNER.

E. Rock Excavation: Including Disposal and Refill with Suitable Material when encountered, the volume of rock excavation, as listed in Part 4 of the Bid Schedule, as "Trench Rock Excavation & Removal" (Item No. 33h), will be measured for payment in "Cubic Yards" (CY) in its original position, prior to excavation, computed based on the pre-approved trench width, length of rock excavation and average depth of rock excavation. Boulders or detached rock fragments which are less than 1 cubic yard shall not be measured for payment separately, but shall be classified as earth excavation.

F. Boulders or detached rock fragments, which are 1 cubic yard or more, shall be measured for payment individually and the volume will be computed from average dimensions taken in three representative directions. Boulders or detached rock fragments that are located within the excavation limits of the water main, service piping, or other appurtenances, or above the existing grade along the route of the water main or service piping, and are required to be removed to facilitate trenching, shall be measured as specified above. The Contractor shall clean rock formation for measurement and notify the OWNER that the boulders and/or excavated rock fragments are ready for measurement. If the Contractor fails to give such notice, then the OWNER will take measurement at the time he first observes the formation in question, and this quantity will be used for payment.

2.1.6 TEMPORARY RESTORATION - BITUMINOUS PAVEMENT

The extent of temporary bituminous concrete pavement, including gravel base course, required by these Specifications for the interim restoration of roadways, intersections, and sidewalks, as listed in Part 1 of the Bid Schedule (Item Nos. 21a and 21b) and in Part 4 of the Bid Schedule (Item Nos. 33c, 33d, and 33e) shall be measured and computed in square yards to the nearest 1/10th of a square yard. The width for measurement of the minimum 2-inch compacted thickness of bituminous concrete (hot-mix) pavement surface course, or other interim pavement depth), as required for the water main installations and related service work, will be the specified width within the payment line limits, as described and shown on the trench details, and the length will be the actual length of the trench pavement limits, as measured along the center line of the trench.

2.1.7 PERMANENT RESTORATION – BITUMINOUS STREET PAVEMENT

2.1.7.1 TRENCH RESTORATION

A. The extent of permanent bituminous concrete pavement, which is placed to restore all roadways that have existing gravel bases, as listed in Part 1 of the Bid Schedule (Item Nos. 22a, 22b, and 22c), will be measured and computed in square yards to the nearest 1/10th of a "Square Yard" (SY). The width for measurement of the permanent bituminous (hot mix) pavement structure, of the specified courses and thicknesses, will be the specified width within the payment line limits, as described and shown on the trench details for the restored pavement surface, and the length will be the actual length of the trench pavement limits, as measured along the center line of the trench.

B. The extent of concrete placed to restore roadways with a reinforced concrete road base, as listed in Part 1 of the Bid Schedule (Item No. 22d), will be measured and computed in square yards to the nearest 1/10th of a "Square Yard" (SY). The width and length for measurement of the replaced reinforced concrete road base, will be the actual limits of the sawcut trench excavation measured in the field. Furnishing and installing 1" diameter epoxy coated steel reinforcing dowels 18 inches on center will be considered included in the unit price bid for this particular item of permanent street pavement restoration.

C. The extent of permanent bituminous concrete binder pavement, which is placed to restore select roadways not requiring a surface course, as listed in Part 1 of the Bid Schedule (Item No. 22e), will be measured for payment by the unit “Ton”, for the actual number of ton of bituminous concrete binder material placed in a minimum of two lifts for the existing pavement thicknesses encountered during construction at these select roadway locations, as directed by the OWNER.

2.1.7.2 INFRARED RESTORATION

The extent of infrared permanent bituminous pavement restoration, to restore select roadway patches, as listed in Part 4 of the Bid Schedule (Item No. 33a), will be measured for payment by the "Square Yard (SY). Measurement will be computed based on the actual width and length dimensions of the burned back asphalt measured in the field. The limits of work for infrared restoration areas will be determined in the field as directed by the OWNER. Contractor shall minimize limits of asphalt burn back to 6" beyond the existing temporary patch edge or as determined in the field as directed by the OWNER.

2.1.7.3 MILL AND OVERLAY

The extent of cold plane/micro mill bituminous pavement restoration, to restore select roadways, as listed in Part 1 of the Bid Schedule (Item No. 33b), will be measured for payment by the "Square Yard (SY). Measurement will be computed based on the actual width and length dimensions as measured in the field. The limits of work for cold plane/micro mill restoration areas will be determined in the field as directed by the OWNER.

2.1.8 PERMANENT RESTORATION - SIDEWALKS & DRIVEWAYS

A. Restoration of bituminous sidewalks and driveways, which are disturbed as a result of construction operations, as listed in Part 1 of the Bid Schedule (Item No. 22f), will be measured for payment by the "Square Yard (SY). Measurement will be computed based on the actual width and length dimensions measured in the field for the specified depth of new pavement. The limits of work for the sidewalk and driveway restoration areas will be as specified, or as determined in the field and directed by the OWNER.

B. Restoration of cement concrete sidewalks and driveways, which are disturbed as a result of construction operations, of the specified thicknesses, as listed in Part 1 of the Bid Schedule (Item Nos. 22g and 22h), will be measured for payment by the square yard (SY). Measurement will be computed based on the actual width and length dimensions measured in the field for the specified depth of new concrete pavement. Contractor shall minimize limits of disturbance for the restoration of the sidewalk and driveway panels, which will be determined in the field as directed by the OWNER.

2.1.9 BRICK / PAVER AND COBBLESTONE RESTORATION

The restoration of existing brick / paver, or cobblestone sidewalks, driveways, or streets, which are disturbed as a result of construction operations associated with the service replacement work, as directed by the OWNER at select locations, as listed in Part 1 of the Bid Schedule (Item Nos. 22i and 22j), will

be measured for payment by the unit "Square Yard" (S.Y.). Measurement will be computed based on the actual width and length dimensions measured in the field at the site of the approved brick / paver, or cobblestone sidewalk, walkway, driveway, or street restoration. Contractor shall minimize the limits of disturbance of existing brick / paver, or cobblestone to remain during construction and removal operations.

2.1.10 CURB RESTORATION

A. Replacement of granite, precast concrete, cast-in-place concrete, or bituminous street curbing, to restore existing broken or deteriorated curbing, as directed by the OWNER at select locations, as listed in Part 1 of the Bid Schedule (Item Nos. 23a, 23b, 23c and 23d), will be measured for payment by the unit "Linear Foot" (L.F.), of the actual number of linear feet of new curbing installed. Contractor shall minimize the limits of disturbance of existing sound curbing to remain during construction operations.

B. The resetting of existing concrete or granite curbing, which may be required outside of the service replacement trench limits to accommodate the proper restoration of the existing sidewalk, or as directed by the OWNER at select locations, as listed in Part 1 of the Bid Schedule (Item No. 23e), will be measured for payment by the unit "Linear Foot" (L.F.). Measurement will be computed based on the actual number of linear feet, as measured in the field, of existing concrete or granite curbing that is disturbed and reset, as directed and approved by the OWNER.

2.1.11 GRASS RESTORATION

Restoration of grassed areas in the public right of way or on private property, which are disturbed as a result of construction operations, will not be measured separately for payment, but the costs thereof will be considered included in the price bid for the applicable work items under “PIPELINE SYSTEMS – PUBLIC SPACE”. The limits of work for the grass restoration areas will be as specified, or as determined in the field and directed by the OWNER.

2.1.12 CLEARING AND GRUBBING

No separate payment will be made for clearing and grubbing. The costs thereof will be considered included in the price bid for the applicable work items, as described herein.

2.1.13 ABANDONMENTS

A. Abandoned Lead Service Removal (Part 2 Bid Schedule): The work performed

in connection with the exclusive removal of existing Abandoned Lead Services, as listed in the Bid Schedule (Item Nos. 24a to 24c), will be measured for payment by the unit "Linear Foot" (L.F.) for the actual number of linear feet of service tubing removed (if required); and “Each” for the closing or the removal of the existing corporation stop, plugging of the existing tap (as applicable), and the removal and disposal of the existing service box. Abandoned Lead Service Removals at designated locations within the scope of work will be directed by the OWNER.

B. Cast Iron Abandonments NOT SPECIFIED ON THE DESIGN PLANS: The removal and disposal of existing 4", 6" and 8" Services, as listed in Part 2 of the Bid Schedule (Item Nos. 25a, 25b, and 25c), will be measured for payment by the unit “per Each” upon completion of the following: removal of existing fittings, piping, appurtenances and incidental piping work required for tie-in to the existing cast iron water main. No additional payment shall be made for the tie-in (i.e. couplings, piping, and other necessary fittings) required to remove these abandonments. These items are intended for Cast Iron Abandonments "NOT SPECIFIED ON THE DESIGN PLANS."

C. No additional payment shall be made for the abandonment of existing water mains, services, plugged stubs, and other appurtenant fitting removals as specified on the design plans. The cost, thereof, will be considered to be included with the unit bid prices for the Water Main Replacement and Rehabilitation work under Part 1 of the Bid Schedule.

D. No additional payment shall be made for the reconnect/tie-in of existing active cast and ductile iron services within the project scope of work. The cost, thereof, will be considered to be included with the unit bid prices for the Water Main Replacement and Rehabilitation work under Part 1 of the Bid Schedule.

2.1.14 PIPELINE SYSTEMS – PRIVATE SPACE

A. The furnishing and installation of 1” and 2” water services within Private Property, as listed in Part 3 of the Bid Schedule (Item Nos. 26a and 26b), will be measured for payment by the unit “Each” (EA.) completed and accepted, at the designated private-side lead service replacement locations.

B. Utility Crew (Base Rate): The base rate per Utility Crew for the services employed to complete Private Side lead service replacements, will not be measured separately for payment, but the costs thereof will be considered to be included with the unit bid prices in Items 26a and 26b.

C. Utility Crew (Hourly Rate beyond Base Rate): The rate per Utility Crew beyond a four (4) hour period, will not be measured separately for payment, but the costs thereof will be considered to be included with the unit bid prices in Items 26a and 26b.

D. Loam & Seed, Sidewalk, and Driveway Restoration (Private Side LSR): Restoration of grass lawns, both concrete and asphalt sidewalks and driveways, brick, pavers, and cobblestone areas, which are disturbed as a result of the private side lead service replacement, will not be measured separately for payment, but the costs thereof will be considered to be included with the unit bid prices in Items 26a and 26b. The limits of work for these restoration areas will be as specified, or as determined in the field and directed by the OWNER.

E. The removal and disposal of existing lead water services removed by either open-cut trench or by trenchless technology means and methods, pipe fittings, couplings, adapters, and other appurtenances, of the various sizes required, will not be measured separately for payment, but the costs thereof will be considered included in the price bid for the applicable work items under “PIPELINE SYSTEMS – PRIVATE SPACE”, as described herein.

F. The furnishing and installation of individual interior 1” or 2" Ball Valves, as required to isolate the meter, complete in place and accepted for each private water service installation, will not be measured separately for payment, but the costs thereof will be considered to be included with the unit bid prices in Items 26a and 26b.

G. The furnishing and installation of an interior 1” or 2" Pressure Reducing Valves, as applicable and if required, complete in place and accepted for each private water service installation, will not be measured separately for payment, but the costs thereof will be considered to be included with the unit bid prices in Items 26a and 26b.

H. The furnishing and installation of a Jumper Pipe at a new water meter location may be required. No additional payment shall be made for installation of a Jumper Pipe, but the costs thereof will be considered included in the price bid for the applicable work items under “PIPELINE SYSTEMS – PRIVATE SPACE”.

I. The furnishing and installation of a 1” Backflow Prevention Devices, as applicable and if required, complete in place and accepted for each private water service installation, will not be measured separately for payment, but the costs thereof will be considered to be included with the unit bid prices in Items 26a and 26b.

J. The furnishing and installation of a new Expansion Tank, as applicable and if required, complete in place and accepted for each private water service installation, will not be measured separately for payment, but the costs thereof will be considered to be included with the unit bid prices in Items 26a and 26b.

K. Master Plumber Service Fee (Base Rate): The base rate per Master Plumber, will not be measured separately for payment, but the costs thereof will be considered to be included with the unit bid prices in Items 26a and 26b.

L. Master Plumber Service Fee (Hourly Rate beyond Base Rate): The rate per Master Plumber for the services employed to complete Private Side lead service replacements beyond a four (4) hour period, will not be measured separately for payment, but the costs thereof will be considered to be included with the unit bid prices in Items 26a and 26b.

M. Plumbing Permit: The Plumbing Permit fee, required by the municipality to complete Private Side lead service replacements, will not be measured separately for payment, but the costs thereof will be considered to be included with the unit bid prices in Items 26a and 26b.

N. The furnishing, installation, and testing of a new Reduced Pressure Zone (RPZ) Backflow Prevention devices, of the sizes listed in Part 3 of the Bid Schedule (Item Nos. 27a to 27d), will be measured by the unit "Each" (EA.) complete in place and accepted for each new private water service installation associated with select commercial properties, as directed by the OWNER.

2.1.15 TRAFFIC CONTROL

A. Uniformed Traffic Control Police: Special Duty Police for uniformed traffic control within the project's limits of construction, as required by the local Police Departments of the respective Cities and Towns, will be reimbursed to the Contractor per pay period as a pass-through without markup. The Contractor will call in the details and pay the invoices to the respective cities and towns that they have utilized for the period. For reimbursement purposes, the Contractor shall forward detail voucher (slip) copies to OWNER, with a copy of the invoice for verification.

B. Flagpersons: The utilization of Flagpersons for traffic control employed within the project's limits of construction, as directed by the Engineer and/or the local Police Departments of the respective Cities and Towns, will be paid by the OWNER per pay application. If flagger services are subcontracted, the Contractor shall forward flagger invoices with certified payroll to OWNER for payment without markup. If the flagperson is employed by the General Contractor, flagger services shall be compensated for the employee's hourly wage without markup.

C. Temporary Construction Signage and Traffic Control Devices: Measurement for the placement and relocation of temporary construction signs, traffic cones, drums, barricades, or other traffic control devices, will not be measured separately for payment, but the costs thereof will be considered to be included with applicable items of work, as listed in the Bid Schedule, to perform the overall contract work.

2.1.17 EXISTING WATER MAIN FLOW LINE STOPPING DEVICES

A. The furnishing and installation of single line stopping devices, of the sizes listed in Part 4 of the Bid Schedule (Item Nos. 28a to 28c), will be measured for payment by the unit price bid per "Each" (EA.), for the actual number of line stopping operations performed on existing water mains as directed by the OWNER.

B. The furnishing and installation of double line stopping devices, of the sizes listed in Part 4 of the Bid Schedule (Item Nos. 29a to 29c), will be measured for payment by the unit price bid per "Each" (EA.), for the actual number of line stopping operations performed on existing water mains as directed by the OWNER.

2.1.18 TAPPING SLEEVES AND VALVES

The furnishing and installation of the specified Tapping Sleeves and Valves, of the sizes listed in Part 4 of the Bid Schedule (Item Nos. 30a to 30f), will be measured for payment by the unit price bid per "Each" (EA.), for the actual number of tapping sleeve and valve installations performed on existing water mains, as directed by the OWNER.

2.1.19 INSERTION VALVES

The furnishing and installation of the specified Insertion Valves, of the sizes listed in Part 4 of the Bid Schedule (Item Nos. 31a to 31c), will be measured for payment by the unit price bid per "Each" (EA.), for the actual number of insertion valve installations performed on existing water mains, as directed by the OWNER.

2.1.20 BUTTERFLY VALVES

Butterfly Valves: Butterfly valves, of the size listed in the Bid Schedule (Item No. 32a), shall be measured by the unit "Each" (EA.), for each butterfly valve installed, complete, in-place and accepted by the OWNER.

SECTION 01150
MEASUREMENT & PAYMENT

Payment

3.1 BASIS OF PAYMENT

3.1.1 PIPELINE SYSTEMS - PUBLIC SPACE

A. Ductile-Iron Pipe: Payment for quantity measured, as specified and listed in the Bid Schedule (Item Nos. 1, 2, 3, 4, 5, 6), to furnish and install Ductile-Iron Pipe for the water main replacement work, will be made at the unit prices bid per "Linear Foot" (L.F.), which price will include furnishing and installing all pipe, pipe jointing materials, joint restraint devices (e.g. field locking gaskets), and all other necessary accessory materials; for hauling and handling of all materials; for pipe cutting; for jointing and connection to other pipe; for all earthwork in connection with the construction of the new water main replacement, including saw-cutting, pavement removal, excavations, pipe bedding, backfilling and compaction, grading, and preparation of subgrades; for removal and disposal of the existing water mains and appurtenances; for all dewatering, pumping, drainage and bailing of excavations; for the satisfactory removal and disposal of all soils and pavement materials; disposal of surplus materials; pressure testing and disinfection; for all labor, equipment, plant, tools and materials; and for all appurtenant and incidental work and all other costs necessary to satisfactorily complete the ductile-iron water main installations in accordance with the specifications, and at the locations as directed by the OWNER.

B. Ductile-Iron Pipe Fittings: Payment for quantity measured, as specified and listed in the Bid Schedule (Item No. 7), to furnish and install Ductile-Iron Pipe Fittings, including pipe couplings or solid sleeves, will be made at the unit prices bid per "Pound" (LB), which price will include furnishing and installing all pipe fittings (e.g. bends, crosses, tees, etc.), pipe jointing materials, and all other necessary accessory materials; for hauling and handling of all materials; for pipe jointing; for all other incidental earthwork associated with the installation of the new fittings for the water main replacement, including saw-cutting, pavement removal, excavations, pipe bedding, backfills and compaction, grading, and preparation of subgrades; for removal and disposal of the existing water mains and appurtenances; for all dewatering, pumping, drainage and bailing of excavations; for the satisfactory removal and disposal of all soils and pavement materials; disposal of surplus materials; pressure testing and disinfection; for all labor, equipment, plant, tools and materials; and for all appurtenant and incidental work and all other costs necessary to satisfactorily complete the installation of the ductile-iron water main fittings and coupling connections in accordance with the specifications, and at the locations as directed by the OWNER.

Mechanical Joint Restraint: No separate payment will be made for the installation

of mechanical restrained joint gland mechanisms, which will be required for pipe joint restraint at all pipe bends, tees, and caps or plugs for dead-end water main locations, of the specified dimensions and sizes, but the cost thereof shall be deemed to be included in the unit price bid for the ductile-iron pipe fitting work described herein.

Concrete Thrust Blocks: No separate payment will be made for the installation of concrete thrust blocks, which will be required for pipe restraint at all pipe bends, tees, and caps or plugs for dead-end water main locations, of the specified dimensions and sizes, but the cost thereof shall be deemed to be included in the unit price bid for the ductile-iron pipe fitting work described herein.

C. Gate Valves: Payment for quantity measured, as specified and listed in the Bid Schedule (Item Nos. 8, 9, 10, and 11), to furnish and install the specified buried service Gate Valves, will be made at the unit prices bid per "Each" (EA.), which price will include the gate valve, C.I. valve box, mechanical restrained jointing materials (main line piping and couplings to be paid under respective unit items herein), and all other necessary accessory materials; for hauling and handling of all materials; for pipe jointing; for all other incidental earthwork associated with the installation of the new gate valves for the water main replacement, including saw-cutting, pavement removal, excavations, pipe bedding, backfills and compaction, grading, and preparation of subgrades; for removal and disposal of the existing gate valves and appurtenances; for all dewatering, pumping, drainage and bailing of excavations; for the satisfactory removal and disposal of all soils and pavement materials; disposal of surplus materials; pressure testing and disinfection; for all labor, equipment, plant, tools and materials, and for all appurtenant and incidental work and all other costs necessary to satisfactorily complete the items in accordance with the specifications, and at the locations as directed by the OWNER.

D. Fire Hydrant Assemblies: Payment for quantity measured, as specified and listed in the Bid Schedule (Item Nos. 12a and 12b), to furnish and install the specified Fire Hydrant Assembly, will be made at the unit prices bid per "Each" (EA.), which price will include the fire hydrant, 6-inch or 8-inch ductile-iron branch piping, 6-inch or 8-inch gate valve, valve box, hydrant anchor tee, mechanical restrained jointing materials (main line piping and couplings to be paid under respective unit items herein), and all other necessary accessory materials; for hauling and handling of all materials; for pipe jointing; for all other incidental earthwork associated with the installation of the new fire hydrant assemblies associated with the water main replacement work, including saw-cutting, pavement removal, excavations, pipe bedding, backfills and compaction, grading, and preparation of subgrades; for removal and disposal of the existing fire hydrants and appurtenances; for all dewatering, pumping,

drainage and bailing of excavations; for the satisfactory removal and disposal of all soils and pavement materials; disposal of surplus materials; pressure testing and disinfection; for all labor, equipment, plant, tools and materials, and for all appurtenant and incidental work and all other costs necessary to satisfactorily complete the items in accordance with the specifications, and at the locations as directed by the OWNER.

E. Two-inch Blow-off Assemblies: Payment for quantity measured, as specified and listed in the Bid Schedule (Item No. 13), to furnish and install the specified 2-inch Blow-off Piping Assembly, will be made at the unit prices bid per "Each" (EA.), which price will include the service saddle, 2-inch brass piping and fittings, curb stop, 2-inch galvanized riser piping, cast-iron road boxes, and all other incidental materials; for hauling and handling of all materials; for tapping; pipe jointing; for all other incidental earthwork associated with the installation of the new blow-off assembly associated with the water main replacement work, including saw- cutting, pavement removal, excavations, bedding, backfills and compaction, grading, and preparation of subgrades; for removal and disposal of the existing blow-off or bleeder assemblies and appurtenances; for all dewatering, pumping, drainage and bailing of excavations; for the satisfactory removal and disposal of all materials, disposal of surplus materials; for all labor, equipment, plant, tools and materials, and for all appurtenant and incidental work and all other costs necessary to satisfactorily complete the items in accordance with the specifications, and at the locations as directed by the OWNER.

F. Protection of Existing Pipelines and Utilities: The support and protection of existing gas, water, telephone, cable television, storm or sanitary sewer, and electric lines, crossing the trench, which may be required to prevent damage of the utilities during construction, will not be measured for separate payment, but the cost thereof will be considered to be included with the unit bid prices for the applicable work items under "PIPELINE SYSTEMS – PUBLIC SPACE", as described herein.

G. Calcium Chloride: No separate payment will be made for furnishing and placing calcium chloride for dust control, but the costs thereof shall be considered to be included with the unit prices bid for the applicable items of work as listed under "PIPELINE SYSTEMS – PUBLIC SPACE", as described herein for which calcium chloride is required.

H. Dewatering, Control & Diversion of Water: No separate payment shall be made for furnishing, installing, maintaining, operating and removing all equipment, facilities, construction and appurtenant work required to maintain in a dry condition the areas in which construction of this contract is to be conducted, but the costs thereof shall be considered to be included with the unit bid prices for the applicable work items under "PIPELINE SYSTEMS –

PUBLIC SPACE", as described herein.

I. Excavation Support Systems: No separate payment will be made for excavation support systems (trench boxes), but the cost thereof shall be deemed to be included in the unit prices bid for the applicable items of work under "PIPELINE SYSTEMS – PUBLIC SPACE", as described herein.

3.1.2 SERVICE CONNECTIONS

A. Copper Service Tubing (Part 1 - Bid Schedule): Payment for quantity measured, as specified and listed in the Bid Schedule (Item Nos. 14a, 14b, 15a, 15b, 16a, and 16b), to furnish and install Copper Service Tubing, of the specified diameter sizes, for the replacement of existing lead water services, will be made at the unit prices bid per "Linear Foot (L.F.), which price will include furnishing and installing all copper service tubing, fittings, pipe jointing materials, adapters, and all other necessary connection materials; for hauling and handling of all materials; for jointing and connection to other pipe (e.g. brass compression or polypropylene couplings); for all earthwork in connection with the construction of the new water service replacement, including sawcutting, pavement removal, excavations, backfills and compaction, grading, and preparation of subgrades; for all dewatering, pumping, drainage and bailing of excavations; for the satisfactory removal and disposal of all materials, disposal of surplus materials; flushing; disinfection; for all labor, equipment, plant, tools and materials, and for all appurtenant and incidental work and all other costs necessary to satisfactorily complete the items in accordance with the specifications at the respective public-side lead service replacement locations, as directed by the OWNER.

B. Corporation Stops, Curb Stops, and Service Boxes (Part 1 - Bid Schedule): Payment for quantity measured, as specified and listed in the Bid Schedule (Item Nos. 14c, 15c, and 16c), to furnish and install Corporation Stops and Curb Stops, will be made at the unit price bid per "Each" (EA.), which price will include furnishing all the specified buried corporation stops and curb stops (valve), service boxes, corporation and curb valve jointing accessories, service saddles; and all other necessary materials; installation of these materials as part of the new water service assembly, which price will also include the trench excavations; water main tapping; service connections, backfilling and compaction; grading; and the preparation of subgrades; for all dewatering, pumping, drainage and bailing; and for the satisfactory removal and disposal of surplus materials; for all labor, equipment, plant, tools and materials, and for all appurtenant and incidental work and all other costs necessary to satisfactorily complete the installation of the corporation stop, curb stop (valve), and service box in accordance with the details and specifications at the respective public-side lead service replacement locations, as directed by the OWNER.

C. Reconnection of Existing Copper Services: Payment for quantity measured, as specified and listed in Part 1 of the Bid Schedule (Item Nos. 17a to 17d), to reconnect existing Copper Services, of the specified diameter sizes, will be made at the unit prices bid per "Each" (EA.), which price will include furnishing and installing the new copper service tubing, corporation stop, fittings, pipe jointing materials, adapters, and all other necessary connection materials; for hauling and handling of all materials; for jointing and connection to other service pipe (e.g. brass compression or polypropylene couplings); for any other incidental earthwork in connection with the installation of the service reconnection, including sawcutting, pavement removal, excavations, backfills and compaction, grading, and preparation of subgrades; for the partial removal and disposal of the existing copper service piping; for all dewatering, pumping, drainage and bailing of excavations; for the satisfactory removal and disposal of all materials, disposal of surplus materials; for all labor, equipment, plant, tools and materials, and for all appurtenant and incidental work and all other costs necessary to satisfactorily complete the items in accordance with the specifications, and at the locations as directed by the OWNER.

3.1.3 CLEANING AND LINING EXISTING WATER MAINS

A. Payment for the quantity measured for the "Cleaning and Lining of existing 6", 8" and 12" C.I. Water Mains, as listed in the Bid Schedule (Item Nos. 18a to 18c), will be made at the unit price bid per "Linear Foot" (L.F.) for the linear footage of the existing water mains that are actually cleaned and lined with the specified cement mortar thicknesses, complete and accepted at these designated street locations. Said unit price and payments shall constitute full compensation for furnishing all labor, materials, equipment, tools, supplies and plant, which will be required to perform the cleaning and lining; the associated excavation and backfilling; the installation of the excavation support system; the dewatering of pipelines and excavations; the disconnecting and/or cutting the water main pipe; the protection of structures, properties and utilities; furnishing, installing, maintaining and removing steel decking over street access pit openings; site maintenance; and as further described in the paragraphs below.

B. Payment shall also constitute full compensation for the removal of existing mainline valves and piping to facilitate the cleaning and lining work within the access pits; the satisfactory handling and disposal of cleaning water and residual from the cleaning operations; clearing existing branch connections (laterals) and services, as applicable; hand-placed lining work, where applicable; testing of cement-mortar materials; curing and protection of the completed cement-mortar linings; and the performance of a closed-circuit television (video) inspection of the completed rehabilitated pipeline, as further specified in Section 05200, Cleaning and Lining Water Mains, of these Contract

Specifications.

C. Payment for the quantity measured for "Obstructions", as listed in the Bid Schedule (Item Nos. 18d), will be made at the unit prices bid per "Each" (EA.), as specified herein, for the actual number of each obstructions encountered and removed from the existing water mains, as defined in Section 05200, Cleaning and Lining Water Mains, of these Contract Specifications, which price shall include pavement saw- cutting, pipe cutting and removal, excavation, backfilling and compaction

D. The replacement of existing piping, fittings and valves, which are removed from the existing water mains for the cleaning and lining operations, will be measured and paid separately, as described herein under Article 3.1.1, Pipeline Systems – Public Space, of this section of the Contract Specifications, for the furnishing and installation of new Ductile-Iron Piping, Ductile-Iron Pipe Fittings and Gate Valves.

E. No separate payment will be made for the removal and disposal of existing water main piping, fittings, valves and appurtenances, which is required to facilitate the cleaning and lining operations within the access pits, but the cost thereof shall be deemed to be included in the unit price bid for the overall cleaning and lining contract work. No separate payment will be made for the temporary capping/ plugging of lined sections of main.

F. Both temporary and permanent sidewalk and street pavement restoration, which will be required in connection with the cleaning and lining contract work, will be measured and paid separately, as described herein.

G. Payment of Accepted/Conforming Cleaning and Lining pipe lengths shall only be paid after the following is completed:

i. The water main has been video inspected and approved by Providence Water.
ii. The water main has been pressure tested, chlorinated, and approved by Providence Water.
iii. All hydrants shall be installed prior to chlorination of water main.
iv. Completion of copper service or cast/ductile iron services tie-ins, and lead service replacements.
v. Completion of valve replacements and cross-street water main tie-ins.
vi. All valves, as directed, are opened to provide adequate flow to system and services

3.1.3.1 EXPLORATORY VIDEO INSPECTION

A. Payment for the quantity measured, as specified or directed herein, for

"Exploratory Video Inspection", as listed in Part 4 of the Bid Schedule (Item No. 33g), will be made at the pre-set unit price per "Linear Foot" (L.F.) for the linear footage (displayed and tracked in the video, further specified in Section 05200) of existing water mains that are video inspected for exploratory purposes at locations designated by the OWNER. Said unit price and payments shall constitute full compensation for furnishing all labor, materials, equipment, tools, supplies and plant, which will be required to perform the video inspection; the associated excavation and backfilling; the installation of the excavation support system; the dewatering of pipelines and excavations; the disconnecting and/or cutting the water main pipe; the protection of structures, properties and utilities; furnishing, installing, maintaining and removing steel decking over street access pit openings; site maintenance; and as further described in the preceding paragraphs.

B. The replacement of existing piping, fittings, valves, and other appurtenances which are removed from the existing water mains for the video inspection operations, will be measured and paid separately, as described herein under Article 3.1.1, Pipeline Systems – Public Space, of this section of the Contract Specifications, for the furnishing and installation of new Ductile-Iron Piping, Ductile-Iron Pipe Fittings and Gate Valves.

3.1.4 TEMPORARY BYPASS PIPING SYSTEMS

A. Temporary Bypass Piping: Payment for the quantity measured, for the furnishing and installation of Temporary Bypass Piping, of the sizes listed in Part 1 of the Bid Schedule (Item Nos. 19a to 19c), including temporary services and hydrants, will be made at the unit prices bid per "Linear Foot" (L.F.), which price shall constitute full compensation for the furnishing of all labor, equipment, tools, supplies, materials, appurtenances, and all other work incidental and necessary for satisfactorily installing, disinfecting, maintaining, repairing and removing all temporary bypass piping, temporary hydrants, temporary house or building services, and connections to other piping and water mains; performing all earthwork including excavations for street pipe crossings, backfilling and compacting; removing and resetting existing curbing to accommodate the installation of the temporary bypass piping (if required); performing temporary sidewalk or street pavement restoration; complete in place and accepted along each street location, to facilitate the removal and replacement of the existing water mains serving those areas.

B. Separate payment will <u>not</u> be made for connections to temporary bypass piping that are required to be made underground. As delineated in paragraph 7.6.2 in Section "05800 – Temporary Bypass Piping and Services", all costs associated with the furnishing, installation, maintaining and removing temporary building service connections made underground, will be included in the unit price bid for Temporary Bypass Piping as listed in the Bid Schedule.

C. Separate payment will not be made for temporary service connections to buildings, which extend from the temporary bypass pipe and terminate at the connection to the building plumbing; or for temporary building service connections that extend from building to building. All costs associated with the furnishing, installation, maintaining and removing temporary building service connections, will be included in the unit price bid for Temporary Bypass Piping as listed in the Bid Schedule.

D. Separate payment will not be made for pipe, fittings, isolation valve, or such other accessories or appurtenances incorporated in the temporary bypass piping and services, but the costs thereof shall be included under the unit price bid for Temporary Bypass Piping as listed in the Bid Schedule.

E. Separate payment will not be made for furnishing and installing corporation stops for the connection of temporary bypass piping to existing water mains, but the cost thereof will be included in the unit price bid for Temporary Bypass Piping as listed in the Bid Schedule.

F. Separate payment will not be made for furnishing and installing appropriately sized ball valves at the meter location in each building if required, but the cost thereof will be included in the unit price bid for Temporary Bypass Piping as listed in the Bid Schedule. Many of the existing isolation valves at the meter assemblies are inoperative; it is the responsibility of the Contractor to replace broken ball valves to restore service to each building.

G. Separate payment will not be made for the placement of 2-inch bituminous pavement for the temporary restoration of sidewalk or street pavement surfaces, which are disturbed as a result of the installation and removal of the temporary bypass piping and services, as applicable, but the cost thereof will be included in the unit price bid for Temporary Bypass Piping as listed in the Bid Schedule.

H. Payment of Accepted/Conforming By-pass Piping is to be paid according to the following schedule:
   - 45% for installation including successful disinfection prior to activation
   - 20% for activation and connection of all buildings to By-pass piping
   - 35% for water main deactivation, disconnection of all buildings from By-pass piping, removal of all By-pass Piping from the site, and restoration of all site areas disturbed.

3.1.5 EARTH EXCAVATION

A. Trench Excavation: No separate payment for earth excavation shall be made, including excavation for unsuitable material, but the costs thereof shall be

considered to be included in the unit prices bid for the applicable work items under "PIPELINE SYSTEMS", as described herein.

B. Gravel Borrow (Refill): Payment for approved gravel borrow from off-site sources, as specified, as listed in Part 1 of the Bid Schedule (Item No. 20a), will be made at the unit bid price per Ton (TN). Payment will include all costs associated with furnishing, placing and compacting the Gravel Borrow (Refill) excavation, and disposal of all unsuitable materials off-site.

C. Test Pits: Payment for the quantity measured, as specified and directed, to excavate Test Pits, as listed in Part 1 of the Bid Schedule (Item No. 20b), will be made at the unit price bid per Cubic Yard (C.Y.). Payment will constitute full compensation for all sawcutting, excavation, backfilling and compaction associated with the test pit operations. Where required, additional material to refill test pit excavations will be paid at the unit price bid for "Gravel Borrow", as described above.

D. Dry-Hole Excavations: Payment for dry-hole excavations, as listed in Part 4 of the Bid Schedule (Item No. 33f), will be made at the pre-set unit price per "Each" (EA). Payment will include all costs associated with sawcutting, pavement removal, excavation, backfilling, compaction, grading, and preparation of subgrades; for all dewatering, pumping, drainage and bailing of excavations; for all labor, equipment, plant, tools and materials, and for all appurtenant and incidental work and all other costs necessary to satisfactorily complete this item of work in accordance with the specifications at the select replacement, removal, or abandonment locations, as directed by the OWNER.

E. Rock Excavation: Payment for the quantity measured, as specified or directed herein, for "Trench Rock Excavation & Removal", as listed in Part 4 of the Bid Schedule (Item No. 33h), will be made at the pre-set unit price (per Cubic Yard). Payment will include costs for excavation, removal and disposal of excavated rock or boulders, and refill with suitable materials, either from the excavations or with gravel borrow from off-site sources.

3.1.6 TEMPORARY RESTORATION – BITUMINOUS PAVEMENT

Payment for the quantity measured, as specified or directed, to furnish and place temporary bituminous pavement in roadways, intersections, and in sidewalk or driveway areas, as listed in Part 1 of the Bid Schedule (Item No. 21a and 21b), and in Part 4 of the Bid Schedule (Item Nos. 33c, 33d, and 33e) will be made at the unit price bid (per Square Yard), which prices shall also include the preparation of gravel subgrade, compaction, cleaning, sweeping, and the subsequent maintenance and repair of the temporary trench patching.

3.1.7 PERMANENT RESTORATION – BITUMINOUS STREET PAVEMENT

3.1.7.1 TRENCH RESTORATION

A. Payment for the quantity measured, as specified or directed, to furnish and place permanent bituminous pavement in roadways with existing gravel bases, as listed in Part 1 of the Bid Schedule (Item Nos. 22a, 22b, and 22c), will be made at the unit price bid (per Square Yard), which prices shall also include the preparation and sawcutting of pavement edges; preparation of gravel subgrade; compaction; tack coat; and cleaning and sweeping.

B. Payment for the quantity measured, as specified or directed, to furnish and place concrete base in City or State roadways with reinforced concrete bases, as listed in Part 1 of the Bid Schedule (Item No. 22d), will be made at the unit price bid per "Square Yard" (SY), which price shall include the sawcutting and existing concrete base removal; gravel subgrade preparation; drilling and doweling; temporary hotmix asphalt (if used in lieu of road plates), placement of concrete; preparation and sawcutting of pavement edges; tack coating; rolling and compaction; and cleaning, sweeping.

C. Payment for the quantity measured, as specified or directed, to furnish and place permanent bituminous binder pavement in roadways, which will not require a surface course, as listed in Part 1 of the Bid Schedule (Item No. 22e), will be made at the unit price bid (per Ton), which prices shall also include the preparation and sawcutting of pavement edges; gravel subgrade preparation; tack coating; rolling and compaction; and cleaning and sweeping.

3.1.7.2 INFRARED RESTORATION

Payment for the quantity measured, as specified or directed, to permanently restore asphalt patches via the infrared method, as listed in Part 4 of the Bid Schedule (Item No. 33a), will be made at the unit price bid per "Square Yard" (SY), which price shall include the labor, materials and equipment required to blend new bituminous material with infrared heated existing material to form a joint free integral mix. The cost includes but is not limited to drainage inlet protection, resets and adjustments to final pavement elevation of all valve boxes, curb stops, manhole frames and covers, catch basin frames and grates (disturbed by construction operations) in accordance with the specified procedures of the appropriate utility, additional hot mix asphalt added during infra-red process, asphalt rejuvenator agent, sand or stone dust, removal and disposal of unsuitable material or loose aggregates, temporary patch preparation and final treatment; restoration of pavement markings and loop detectors, feathering driveway aprons to finished grade, jointing to existing asphalt (if required), squaring pavement edges; tack coating; rolling and compaction; and cleaning, sweeping. All other

work delineated in section 8100 “Infrared Bituminous Pavement Restoration” and section 08000 "Special Conditions - Paving, Surfacing, and Permanent Repairs to Streets, Driveways, and Sidewalks" will be considered incidental to this unit item and bid price shall include all work defined in this section. The full depth hot mix asphalt placed in trench after soil compaction (prior to infrared restoration) shall be quantified and paid under items 22a through 22c at the corresponding depth placed to match the existing pavement thickness in-kind.

3.1.7.3 MILL AND OVERLAY

Payment for the quantity measured, as specified or directed, to permanently restore select segments of roadways by means of a micro-mill and overlay, as listed in Part 1 of the Bid Schedule (Item No. 33b), will be made at the unit price bid per "Square Yard" (SY), which price shall include all materials, tools, labor, equipment, and all other incidentals required to finish all work, complete-in-place and accepted by the OWNER. The cost includes but is not limited to drainage inlet protection, resets and adjustments to final pavement elevation of all valve boxes, curb stops, manhole frames and covers, catch basin frames and grates (disturbed by construction operations) in accordance with the specified procedures of the appropriate utility, additional hot mix asphalt, surface preparation, milling, removal and disposal of millings, unsuitable material, loose aggregates, and other debris, asphalt placement, rolling and compaction, restoration of pavement markings and loop detectors, feathering driveway aprons to finished grade, jointing to existing asphalt outside project limits, squaring pavement edges, tack coating; rolling and compaction; and cleaning, sweeping. All other work delineated in Section 8200 **“**Cold Plane / Micro-Mill Bituminous Pavement Restoration” and section 08000 "Special Conditions - Paving, Surfacing, and Permanent Repairs to Streets, Driveways, and Sidewalks" will be considered incidental to this unit item and bid price shall include all work defined in this section. The full depth hot mix asphalt placed in trench after soil compaction (prior to mill and overlay) shall be quantified and paid under items 22a through 22c at the corresponding depth placed to match the existing pavement thickness in-kind.

3.1.8 PERMANENT RESTORATION – SIDEWALKS AND DRIVEWAYS

A. Payment for the quantity measured, as specified or directed, to furnish and place permanent bituminous pavement in sidewalk or driveway areas, as listed in Part 1 of the Bid Schedule (Item No. 22f), will be made at the unit price bid per "Square Yard" (SY), which price shall also include the preparation of gravel subgrade; compaction; rolling; and cleaning and sweeping.

B. Payment for the quantity measured, as specified and directed, to restore cement concrete sidewalks and driveways, which are disturbed as a result of construction operations, as listed in Part 1 of the Bid Schedule (Item Nos. 22g and 22h), will be made at the unit price bid per "Square Yard" (SY), which price

shall include sawcutting; preparation of the gravel subgrade; compaction; formwork; placement of the concrete; concrete protection from weather and vandalism; and clean-up.

3.1.9 BRICK / PAVER AND COBBLESTONE RESTORATION

Payment for the quantity measured, as specified and directed, to remove and restore existing brick / paver, or cobblestone sidewalks, driveways, or streets as directed by the OWNER at select locations, as listed in Part 1 of the Bid Schedule (Item Nos. 22i and 22j), will be made at the unit price bid (per Square Yard), which price shall include the preparation of the subgrade; sand or stone dust bedding; compaction; placing and resetting the existing bricks / pavers, or cobblestones; furnishing and installing the new bricks / pavers, or cobblestones, where required; sweeping; and sidewalk clean-up.

3.1.10 CURB RESTORATION

A. Payment for the quantity measured, as specified and directed, to remove and replace granite, concrete or bituminous street curbing, as directed by the OWNER at select locations, as listed in Part 1 of the Bid Schedule (Item Nos. 23a, 23b, 23c, and 23d), will be made at the unit price bid (per Linear Foot), which price shall include the cutting and removal of the existing curbing; the furnishing, installation and preparation of the gravel subgrade; compaction; furnishing and installing the new granite curbing; precast concrete curbing; forming and placing the cast-in-place concrete curbing; mortar jointing (as applicable); and clean-up.

B. Payment for the quantity measured, as specified and directed, to remove and reset existing granite street curbing outside of the typical service replacement limits of disturbance, as directed by the OWNER at select locations, to accommodate the required sidewalk restoration at a given service address location, as listed in Part 1 of the Bid Schedule (Item No. 23e), will be made at the unit price bid (per Linear Foot), which price shall include the removal, handling and cleaning of the existing segments of granite curbing; the preparation of the gravel subgrade; compaction; the resetting of the existing curbing to proper line, grade and curb reveal; disposal; and clean-up.

3.1.11 GRASS RESTORATION

No separate payment will be made for the restoration of grass lawns or grassed areas, which are disturbed as a result of construction operations. At no additional cost, the contractor shall repair all disturbed grassed areas along the street Right-of-Way, or within private property. The costs thereof will be considered included in the price bid for the applicable work items under "PIPELINE SYSTEMS – PRIVATE SPACE" and "PIPELINE SYSTEMS – PUBLIC SPACE", as described herein.

3.1.12 CLEARING AND GRUBBING

A. Clearing shall consist of removal and disposal at ground level of tree limbs, brush, shrubs, grass, weeds, other vegetation, down timber, rotten wood, rubbish, fences, incidental structures, bituminous and concrete paving, and general debris within the limits of construction.

B. Grubbing shall consist of removal of stumps, roots, stubs, brush, foundations, and other buried items and debris which interfere with this work.

C. No separate payment will be made for clearing and grubbing. The costs thereof will be considered included in the price bid for the applicable work items under "PIPELINE SYSTEMS – PRIVATE SPACE" and "PIPELINE SYSTEMS – PUBLIC SPACE", as described herein.

3.1.13 ABANDONMENTS

A. Abandoned Lead Service Removal (Part 2 Bid Schedule): Payment for quantity measured, as specified and listed in Part 2 of the Bid Schedule (Item Nos. 24a to 24c), to perform the Abandoned Service Removal work, removal and disposal of lead service tubing (as required), closing and plugging of the existing corporation, including the cutting and crimping of the existing lead service pipe at the existing corporation location (when applicable); the removal of the existing corporation; and the removal and disposal of the existing curb stop and service box, as applicable, at the designated lead service replacement locations, will be made at the unit price bid (per "Linear Foot" or "Each"), which price will constitute full compensation to furnish all the necessary labor, equipment, plant, tools and materials, to perform the specified work, and which price will also include excavations, backfilling, grading, and for the satisfactory removal and disposal of surplus materials; and for all appurtenant and incidental work and all other costs necessary to satisfactorily complete the closing of the existing corporation; the cutting and crimping of the existing lead service pipe at the existing corporation location; the removal of the existing corporation stop, and plugging of the water main at the existing corporation location; and the removal and disposal of the upper section of the existing service box, as applicable, at the designated abandoned service locations, as directed by the

OWNER.

B. Payment for the quantity measured, as specified herein, for the removal and disposal of existing 4", 6", and 8" Services, as listed in Part 2 of the Bid Schedule (Item Nos. 25a to 25c), will be made at the unit price (per Each), which price will include the removal of existing fittings, piping, appurtenances and incidental piping work required for tie-in to the existing cast iron water main (i.e. couplings, piping, and other necessary fittings), capping abandoned pipe sections, mechanical restrained jointing materials, and all other necessary accessory materials; for hauling and handling of all materials; for all other incidental earthwork associated with the removal work, including saw- cutting, pavement removal, excavations, pipe bedding, backfills and compaction, grading, and preparation of subgrades; for removal and disposal of the existing gate valves, blow-offs and appurtenances; for all dewatering, pumping, drainage and bailing of excavations; for the satisfactory removal and disposal of all soils and pavement materials; disposal of surplus materials; for all labor, equipment, plant, tools and materials, and for all appurtenant and incidental work and all other costs necessary to satisfactorily complete the items in accordance with the specifications, and at these select locations, or as directed by the OWNER.

3.1.14 PIPELINE SYSTEMS – PRIVATE SPACE

A. Private property OWNERs may request that they would like their private side lead service replaced based on construction notifications sent by OWNER (Providence Water). OWNER may utilize this contract to authorize and direct Contractor to complete private side lead service replacements in the project areas. If directed by OWNER, Contractor shall complete private side lead service replacements as measured and paid for in accordance with Bid Items 26a and 26b.

B. Private Side Lead Service Replacements must be completed at the same time as the public portion of the lead service to be replaced. Private Side Replacements may not carry over into the following construction season, unless approved by the OWNER. Subsequently all restoration work shall be completed within this aforementioned construction season, which will require appropriate scheduling to accommodate the winter close out. At the OWNER's discretion, exceptions for the permanent restoration requirement may be made for authorizations approved by property OWNERs in the month of October. These temporary patches must be maintained throughout the winter period, at no additional cost, and permanent restoration must be completed the following spring.

C. Payment for quantity measured, as specified and listed in Part 3 of the Bid Schedule (Item Nos. 26a and 26b), to furnish and install 1" and 2" private-side services will be made at the unit prices bid (per each), which price will include all labor, equipment, tools, and for all appurtenant and incidental work, all other costs

necessary to satisfactorily complete the new private-side copper service installation in accordance with the specifications at the designated residential or commercial buildings, as directed by the OWNER, furnishing and installing (by any and all installation methods used by Contractor) all copper service tubing, fittings, pipe jointing materials, adapters, and all other necessary connection materials; for hauling and handling of all materials; for jointing and connection to other pipe; for all earthwork in connection with the construction of the new water service replacement, including sawcutting, pavement removal, excavations, backfills and compaction, grading, and preparation of subgrades; for all dewatering, pumping, drainage and bailing of excavations; for the satisfactory removal and disposal of surplus materials; flushing and disinfection; for all planning and coordination necessary to perform the work, and coordination and scheduling with private property OWNERs and/or residents.

D. No separate payment will be made for the utilization of moling, or other trenchless technologies in connection with the lead service replacement, including cutting and the removal of the interior basement floor; exterior and interior excavations required for the operation; backfills and compaction, grading, and preparation of subgrades; disposal of surplus materials; and the replacement of the interior concrete basement floor. The costs thereof will be considered included in the price bid for the applicable work items under "PIPELINE SYSTEMS – PRIVATE SPACE", as described herein. The provided unit costs in Items 26a and 26b shall be inclusive of whatever installation method(s) the Contractor uses at each and every location.

E. In the event of an unsuccessful pulling attempt and where open trench replacement cannot be employed (not limited to terraced landscapes, fixed obstructions, and other immovable features), a mole or equivalent tunneling device should be utilized. A mole or equivalent tunneling device should be onsite at all times. OWNER does not guarantee the successful replacement and extraction of an existing private side lead service via trenchless technology (pull). No additional payment shall be made to compensate for losses associated with failed replacement attempts. The costs thereof will be considered included in the price bid for the applicable work items under "PIPELINE SYSTEMS – PRIVATE SPACE", as described herein.

F. No separate payment will be made for the restoration of grassed areas, concrete and asphalt sidewalks and driveways, brick, paver, and cobblestone areas which are disturbed as a result of private side lead service replacement. The costs thereof will be considered included in the price bid for the applicable work items under "PIPELINE SYSTEMS – PRIVATE SPACE", as described herein.

G. No separate payment will be made for the removal and disposal of the existing lead water services, pipe fittings, couplings, adapters, and other appurtenances,

of the various sizes required, but the costs thereof will be considered included in the price bid for the applicable work items under “PIPELINE SYSTEMS – PRIVATE SPACE”, as described herein.

H. Protection of Existing Pipelines and Utilities: The support and protection of existing gas, water, telephone, cable television, storm or sanitary sewer, and electric lines, crossing the trench, which may be required to prevent damage of the utilities during construction, will not be measured for separate payment, but the cost thereof will be considered to be included with the unit bid prices for the applicable work items under "PIPELINE SYSTEMS – PRIVATE SPACE", as described herein. Calcium Chloride: No separate payment will be made for furnishing and placing calcium chloride for dust control, but the costs thereof shall be considered to be included with the unit prices bid for the applicable items of work as listed under "PIPELINE SYSTEMS – PRIVATE SPACE", as described herein for which calcium chloride is required.

I. Dewatering, Control & Diversion of Water: No separate payment shall be made for furnishing, installing, maintaining, operating and removing all equipment, facilities, construction and appurtenant work required to maintain in a dry condition the areas in which construction of this contract is to be conducted, but the costs thereof shall be considered to be included with the unit bid prices for the applicable work items under " PIPELINE SYSTEMS – PRIVATE SPACE ", as described herein.

J. Excavation Support Systems: No separate payment will be made for excavation support systems (trench boxes), but the cost thereof shall be deemed to be included in the unit prices bid for the applicable items of work under " PIPELINE SYSTEMS – PRIVATE SPACE ", as described herein.

K. No additional payment shall be made, to furnish and install, an interior 1” or interior 2" Ball Valve, as applicable and as required to isolate the meter. The costs thereof will be considered included in the price bid for Item Nos. 26a and 26b and shall also include all appurtenant copper piping, fittings or adapters, which are required to complete the necessary piping connections before and after the water meter, as part of the interior private side service replacement work.

L. No additional payment shall be made, to furnish and install an interior 1” or 2" Pressure Reducing Valve, as applicable and when required. The costs thereof will be considered included in the price bid for Item Nos. 26a and 26b and shall also include all appurtenant interior copper piping, fittings or adapters, which are required for the necessary piping connections to complete this valve installation, as part of the interior private side service replacement work.

M. No additional payment shall be made, to furnish and install a Jumper Pipe at a

new water meter location (if required). The costs thereof will be considered included in the price bid for Item Nos. 26a and 26b and shall also include all appurtenant copper piping, fittings or adapters, which are required for the necessary piping connections to complete this piping installation, as part of the interior private side service replacement work.

N. No additional payment shall be made, to furnish and install 1" Backflow Prevention Devices, as applicable, after the water meter. The costs thereof will be considered included in the price bid for Item Nos. 26a and 26b and shall also include all appurtenant interior copper piping, fittings or adapters, which are required to complete the backflow device installation, as part of the interior private side service replacement work.

O. No additional payment shall be made, to furnish and install an Expansion Tank (if required). The costs thereof will be considered included in the price bid for Item Nos. 26a and 26b and shall also include all appurtenant interior copper piping, fittings or adapters, which are required for the necessary piping connections to complete the expansion tank installation, as part of the interior private side service replacement work.

P. No additional payment shall be made for providing the services of a Master Plumber to perform and/or supervise the performance of the interior plumbing contract work associated with the installation of private-side service replacements. The costs thereof will be considered included in the price bid for Item Nos. 26a and 26b.

Q. No additional payment shall be made for Plumbing Permit fee required by the municipality to complete Private Side lead service replacements. The costs thereof will be considered included in the price bid for Item Nos. 26a and 26b.

R. Payment for the quantity measured, as specified herein, to furnish, install and test Reduced Pressure Zone (RPZ) Backflow Prevention devices, of the sizes listed in Part 3 of the Bid Schedule (Items 27a to 27d), will be made at the unit price bid per "Each" (EA.), which price shall also include all appurtenant interior copper piping, fittings or adapters, which are required for the necessary piping connections to complete the RPZ backflow preventer installation, as part of the interior private side service replacement work at select commercial properties.

3.1.15 TRAFFIC CONTROL

A. Police details shall be paid by the Contractor and reimbursed by PW per pay period without markup. For reimbursement purposes, the Contractors shall submit invoices copies from the respective cities and towns with copies of daily detail vouchers for verification.

B. Compensation for the Flagperson's services shall be paid by PW per pay period without markup. If flagger services are subcontracted, the General Contractors shall submit flagger invoices with certified payroll for payment. If the flagperson is employed by the General Contractor, flagger services shall be compensated for the employee's hourly wage (on certified payroll) per pay period without markup. The hourly rate of wages paid by the Contractor or Sub-Contractor shall not be less than the prevailing rate set by the Rhode Island Department of Labor.

C. Temporary Construction Signage and Traffic Control Devices: No separate payment shall be made for the placement and relocation of temporary construction signs, traffic cones, drums, barricades, or other traffic control devices, but the costs thereof will be considered to be included with applicable items of work, as listed in the Bid Schedule to perform the overall contract work.

3.1.16 EXISTING WATER MAIN FLOW LINE STOPPING DEVICES

Payment for the quantity measured, as specified and directed, to furnish and install double line stopping devices, of the sizes listed in Part 4 of the Bid Schedule (Item Nos. 28a to 28c and 29a to 29c), will be made at the unit price per "Each" (EA), which price shall constitute full compensation to furnish all materials, equipment, tools and labor to install the specified line stopping devices, including excavations, backfilling, compaction and temporary pavement restoration. The work will also include the exterior cleaning of the existing water main; thrust and support blocking; disinfection; plug seal testing; temporary valve removal; blind flange installation; and coal tar epoxy coating of the assembly.

3.1.17 TAPPING SLEEVES AND VALVES

Payment for the quantity measured, as specified and directed, for the furnishing and installation of the specified Tapping Sleeves and Valves, as listed in Part 4 of the Bid Schedule (Item Nos. 30a to 30f), will be made at the unit price per "Each" (EA), which price will include the tapping sleeve, gate valve, valve box, mechanical restrained jointing materials, concrete thrust block. and all other necessary accessory materials; for hauling and handling of all materials; for pipe jointing; for all other incidental earthwork associated with the installation of the new tapping sleeve and valve for interconnection to the new water main piping, including saw-cutting, pavement removal, excavations, pipe bedding, backfills and compaction, grading, and preparation of subgrades; for removal and disposal of the existing gate valves and appurtenances; for all dewatering, pumping, drainage and bailing of excavations; for the satisfactory removal and disposal of all materials, disposal of surplus materials; for all labor, equipment, plant, tools and materials, and for all appurtenant and incidental work and all other costs

necessary to satisfactorily complete the items in accordance with the specifications, and at the tapping valve locations as directed by the OWNER.

3.1.18 INSERTION VALVES

Payment for the quantity measured, as specified and directed, for the furnishing and installation of the specified Insertion Valves, as listed in Part 4 of the Bid Schedule (Item Nos. 31a to 31c), will be made at the unit price per "Each" (EA), which price will include the new insertion valve, valve box, mechanical restrained jointing materials, and all other necessary accessory materials; for hauling and handling of all materials; for cleaning and tapping the existing water main piping; for permanent valve support; for all other incidental earthwork associated with the installation of the overall insertion valve installation, including saw-cutting, pavement removal, excavations, pipe bedding, backfills and compaction, grading, and preparation of subgrades; for all dewatering, pumping, drainage and bailing of excavations; for the satisfactory removal and disposal of all materials, disposal of surplus materials; for all labor, equipment, plant, tools and materials, and for all appurtenant and incidental work and all other costs necessary to satisfactorily complete the items of work in accordance with the specifications at the designated insertion valve locations, as directed by the OWNER.

3.1.19 BUTTERFLY VALVES

Butterfly Valves: Payment for quantity measured, as specified and listed in the Bid Schedule (Item No. 32a), to furnish and install the specified buried service Butterfly Valves, will be made at the unit prices bid per "Each" (EA.), which price will include the butterfly valve, C.I. valve box, mechanical restrained jointing materials, a minimum 3ft DI spool piece on either side of the valve (sized as required), couplings (as required) for tie-in to the existing main, and all other necessary accessory materials; for hauling and handling of all materials; for pipe jointing; for all other incidental earthwork associated with the installation of the new gate valves for the water main replacement, including saw-cutting, pavement removal, excavations, pipe bedding, backfills and compaction, grading, and preparation of subgrades; <u>for removal and disposal of the existing gate valves and appurtenances;</u> for all dewatering, pumping, drainage and bailing of excavations; for the satisfactory removal and disposal of all soils and pavement materials; disposal of surplus materials; pressure testing and disinfection; for all labor, equipment, plant, tools and materials, and for all appurtenant and incidental work and all other costs necessary to satisfactorily complete the items in accordance with the specifications, and at the locations as directed by the OWNER.

SECTION 01150
MEASUREMENT & PAYMENT

4.1 UNIT PRICES

4.1.1 The Bidder shall provide unit prices for the hourly rates associated with Labor; Equipment; and Material and Subcontractor Cost Markup Percentages, in the spaces provided in Part 5 of the Bid Schedule. Unit prices and cost markup percentages, as submitted with the Bid Schedule, shall be used for partial payments for any changes and/or additions to the original scope of work. Cost Markup Percentages are not applicable to police, flaggers, and subcontracted flaggers utilized for in scope contract work. Reference is made to the general Item Nos. 34, 35, 36, and 37 in Part 5 of the Bid Schedule for the respective bid items.

4.1.2 Original invoices for Materials and Subcontractor cost shall be submitted to Providence Water with the respective application for payment.

END OF SECTION

SECTION 02000

EARTHWORK

SECTION 02000
EARTHWORK

General Provisions

1.1 DEFINITION OF TERMS

1.1.1 Earthwork shall consist of all excavation, backfilling, and dewatering associated with removal and installation of water mains and/or appurtenances.

1.1.2 The Contractor shall perform all necessary excavation and backfilling called for in these specifications or as required by Providence Water (OWNER), including the necessary sheeting, shoring, pumping, bailing, supporting and protecting existing structures and repairing them when damaged, and removing or altering existing underground obstructions which are owned by private parties.

1.1.3 All excavations shall be classed as earth excavation or rock excavation.

1.2 EARTH EXCAVATION

1.2.1 Earth excavation shall include sand, gravel, ashes, roots, loam, clay, swamp muck, soft shale or disintegrated rock or hardpan which can be removed by a pick, or a combination of such materials, and boulders measuring less than one (1.0) cubic yards, whether the boulders are blasted or removed intact.

1.3 ROCK EXCAVATION

1.3.1 Rock excavation shall include solid rock in place, detached rocks, ledge or boulders, sound masonry and concrete, measuring one (1.0) cubic yards or more necessarily removed within the limits of the work, but shall not include pavement, sidewalks, or curbing.

Submittals

2.1 SUBMITTALS

2.1.1 The Contractor shall provide submittals in accordance with Section 13 of "Section 01000 - General Requirements".

2.1.2 The Contractor shall submit for Owner's approval a list of materials to be used for backfilling all trenches.

2.1.3 The Contractor shall submit to Owner a list of equipment to be used in excavation and backfill of all trenches.

Project/Site Conditions

3.1 PROJECT/SITE CONDITIONS

3.1.1 Streets, roads, driveways and sidewalks shall be kept open over all trenches and excavations and the use thereof rendered safe by the construction of substantial bridges with proper handrails where required.

3.1.2 The Contractor shall dispose of all plant, construction and excavated material so as not to obstruct streets, roads, highways or private rights of way. The Contractor shall not obstruct the gutter of any street, road or highway, as such construction operations shall not impede the free passage of surface and storm waters along them. All excavated materials shall be placed in a neat manner on one side of the excavation and shall be kept trimmed up so as to inconvenience the traveling public and adjacent property owners as little as possible. The utmost care shall be used to avoid interference with the ordinary use of the existing streets, roads or highways.

3.1.3 The Contractor shall keep on the job, sufficient supplies of calcium chloride to be applied at locations and at such times and in amounts as directed for the purpose of allaying dust conditions.

3.1.4 The Contractor shall perform roadway sweeping at the end of each workday.

3.1.5 There may be existing traffic loops, sanitary sewers and laterals, gas and water mains with services in all streets along with telephone, cable TV, electric or other underground utilities. If any of these items are damaged by the Contractor, the Contractor shall repair the damage at his own cost, through the appropriate agency.

Materials

4.1 GENERAL

4.1.1 All materials shall conform to the Materials Section of the RIDOT "Standard Specification for Road and Bridge Construction", latest edition, including supplements, if applicable.

4.2 FINE SELECTED MATERIAL

4.2.1 Earth materials containing no stones larger than one (1) inch in size.

4.3 UNCLASSIFIED FILL

4.3.1 For general site earthwork and grading, unless otherwise designated, the fill that is excavated during trench work shall be used as backfill. Where extracted material cannot be replaced as backfill, an unclassified fill shall be used. Unclassified fill is designated as:

a. Containing no rocks greater than two (2) inch in diameter.
b. Containing no frozen material or material subject to decomposition.
c. The Contractor shall remove any unsuitable material as directed by the Owner at his own expense and no additional cost to the Owner.

4.4 FLOWABLE FILL

4.4.1 Where extracted material cannot be replaced as backfill, where situations and conditions so warrant, and as **directed by the Owner**, flowable fill may be placed as backfill. Flowable fill is a fluid, self-leveling, low strength (50 - 100 psi) material consisting of sand, cement, and water. Flowable fill is quick setting, will not settle, yet can be re-excavated in the future if required.

4.5 GRAVEL BORROW MATERIAL

4.5.1 When required, and where directed by the Owner, gravel borrow from off-site sources, when used for backfilling, refill or pavement subbase, shall be composed of hard durable stone and coarse to fine sand, not frozen and free from loam and undesirable organic matter. Gravel borrow shall conform to gradation requirements of the Materials Section of the RIDOT Standard Specification for Road and Bridge Construction, latest edition, including supplements, if applicable.

4.6 CRUSHED STONE MATERIAL

4.6.1 The Contractor shall furnish and install all crushed stone as required. Crushed stone shall consist of ½ to 1-inch washed crushed stone. Crushed stone shall conform to gradation requirements of the Materials Section of the RIDOT Standard Specification for Road and Bridge Construction, latest edition, including supplements, if applicable.

4.7 BANK RUN GRAVEL or PROCESSED GRAVEL

4.7.1 Bank run or processed gravel shall consist of sand and gravel made up of sound, durable particles free from loam, clay, organic soil, vegetative matter, and soft and elongated particles. Bank run or processed gravel shall conform with the Gravel Borrow specifications of the Rhode Island Standard Specifications for Highways and Bridges Subsection M.01.02 and meet the gradation requirements specified in Table 1, column 1a in Subsection M.01.09 of the Rhode Island Standard Specifications for Highways and Bridges. In addition, the maximum particle size shall not exceed 9 inches, or 3/4 of the loose lift thickness, whichever is smaller.

4.8 GRAVEL BEDDING

4.8.1 Gravel bedding for water piping shall consist of bank run or processed gravel, as specified in 6.6.1 of this specification section. Gradation requirements shall comply with Table 1, Column 1a, in Subsection M.01.09 of the Rhode Island Standard Specifications for Highway and Bridges with the exception that 100% by weight of the gravel bedding material shall pass through the 1-1/2 sieve.

Equipment

5.1 Equipment shall be of adequate size for any and all operations throughout the course of work.

5.2 SAW CUTTER

5.2.1 A saw cutter of adequate size and power is required for all saw cutting of bituminous and/or concrete pavements.

5.3 COMPACTOR

5.3.1 A compactor is required to achieve 95% maximum dry density for compaction of backfill.

5.4 ACCESSORIES

5.4.1 The Contractor shall have a water pump at the site of any and all excavations requiring their use to keep excavations clear of water.

Execution

6.1 REMOVING PAVEMENT

6.1.1 Where pavements for existing streets, roads, driveways or sidewalks are encountered within the limits of the excavation, remove such pavement or surfacing to the extent necessary to complete the work. The width of pavement removal for the required street excavation shall not exceed the maximum width of trench excavation as specified herein under Article 8.2.1.

6.1.2 The Contractor shall remove pavement in accordance with the regulations and ordinances of the Local, City, Town and/or State authority having jurisdiction over the project.

6.1.3 Saw-cutting of all bituminous and concrete pavement shall be required. Ripping of pavement is unacceptable.

6.2 DIMENSIONS OF EXCAVATION

6.2.1 The width of the excavation shall be sufficient to meet the minimum trench excavations specified herein so as to permit proper alignment of the pipes, service tubing and appurtenances; and to accommodate the thorough tamping of the backfill around and under the pipes, service tubing and appurtenances in their final location. The width of the excavation shall not exceed four (4) feet, or six (6) inches beyond the exterior of the sheeting or trench box when excavation support systems are required within the trench.

6.2.2 There shall be at least six (6) inches clear opening at all points between the outside of the pipe and appurtenances and the sides of the excavation. Where excavations are sheeted, the specified clear opening shall be provided between the inside face of the sheeting and the outside of the pipe and/or appurtenances.

6.3 TUNNELING

6.3.1 All excavations shall be open cut. Tunneling or any other trenchless method will not be permitted unless authorized by the Owner, or required by federal, state, or local ordinances.

6.4 SHEETING, BRACING, AND COFFERDAMS

6.4.1 To prevent injury to the work or delays in construction, the Contractor shall maintain all excavations in proper order and take necessary precautions to prevent movement of the sides.

6.5 DEWATERING

6.5.1 The Contractor shall take necessary precautions to keep the work free from ground or surface water. Provide pumps of adequate capacity to remove from the excavations the water which may enter and in such a manner that it will not interfere with the progress of the work or the proper placing of pipes and appurtenances. The Contractor shall also utilize sedimentation and silt control for the protection of catch basins such as check hay bales, filter cloth, or silt stacks for effluent discharges from the dewatering operations.

6.6 TRENCH EXCAVATION

6.6.1 The Contractor shall perform all necessary excavation specified herein or as required by the Owner, including the necessary sheeting, shoring, pumping, bailing, supporting and protecting existing structures and repairing them when damaged, and removing or altering existing underground obstructions which are owned by private parties.

6.6.2 The Contractor shall make all trench excavations to a sufficient depth so as to leave a minimum cover of four (4) feet, six (6) inches over the top of the pipe. Unless otherwise directed by the Owner, the Contractor shall excavate so as to leave at least six (6) inches between all pipes and/or appurtenances and other subsurface structures as installed or relocated.

6.6.3 Dry-Hole Excavations: Dry-hole excavations are considered the customary open-cut trench excavations intended to uncover and reveal the existing lead water service for purposes of removal and replacement, but the existing service is found to be constructed of copper or other materials, and therefore would not require replacement. The dry-hole excavation is also applicable to trench excavations performed by the Contractor for the removal of abandoned services, which cannot be found, or for excavations performed at mismarked field locations. These excavations shall be of a suitable depth, length and width to uncover and reveal the existing service, or to determine that an active or abandoned service is not located within the normal trench width anticipated for this work at the marked field locations. A water facility shall be considered mismarked if its actual location is found to be greater than three feet from the DIGSAFE marked field location. During the dry-hole excavations, the Contractor shall

ensure that the existing service is adequately revealed so as to determine that the existing public service extending from the water main to the point of connection to the private side service is constructed of copper material. Similarly, excavations associated with abandoned services not found, or excavations associated with mismarked water main locations, shall be satisfactorily excavated and probed to reasonably determine that these services or water main appurtenances cannot be found at those field locations. Reference is made to Section 01150, "Measurement and Payment", for the measurement and basis of payment associated with dry-hole excavation work under this contract.

6.6.4 Test Pits: Test pits shall be excavated by the Contractor at the locations shown on the drawings, or where directed by the Owner, to investigate and establish locations of existing pipelines, other utilities, or other buried items for which the exact location is to be determined. The excavation, protection and backfilling of test pits shall be in accordance with the provisions of this section of the Contract Specifications. The depth of the test pits shall be of a minimum depth as necessary to uncover and reveal the underground utilities or other items being investigated, but the maximum depth of the test pit shall generally be no more than ten (10) feet, as measured from the average ground surface at the test pit location immediately prior to excavating each pit. Test pits shall be backfilled with approved materials and compacted to the densities specified herein.

6.7 BACKFILLING

6.7.1 Backfilling material for at least one (1) foot above the top of the pipe and appurtenances shall consist of selected fine material containing no stones larger than one (1) inch in size.

6.7.2 The Contractor shall carefully and thoroughly tamp backfill of fine selected material with approved tools in such a manner as to prevent settlement. Special care shall be taken to place the best sandy or gravelly material under the pipe and appurtenances, on the quarters as to bring it up solidly so as to furnish a hard bed for the whole of the lower part of the pipe.

6.7.3 The required backfill material, which is placed above the one (1) foot layer of fine selected material, shall be the excavated, in-situ material; an unclassified fill; or Gravel Borrow. The backfill material shall be placed in three equal layers provided it is compacted by means of a compactor to achieve a ninety-five percent (95%) maximum dry density. All percentages of compaction specified herein shall be related to the maximum dry density as established by Method D, ASTM D1557-70, and verified in the field by the Owner's field/laboratory testing representative utilizing ASTM D1556-68, D2167-66 or an approved nuclear density testing device. Prior to placing the backfill material, at least one (1) laboratory test shall be made on a representative sample to determine gradation and the moisture density characteristics of the proposed material.

6.7.4 At the direction of the OWNER or as specified in the contract documents, the Contractor may be directed to place flowable fill as backfill material at select trench locations.

6.7.5 The use of frozen material will not be permitted. The excavated paving, either bituminous or other, shall not be placed in the trench as backfill.

6.7.6 Unsuitable materials are herein defined as organic material, peat, organic silt or combinations thereof; and any existing materials of such gradation that more than 40% of its total weight passes the No. 200 sieve in a standard gradation analysis (ASTM D422). All materials of whatever description, which are in the opinion of the OWNER is too loose or saturated for use as backfill to provide satisfactory bearing, shall be considered as unsuitable. Tests required to evaluate such conditions shall be made at the Contractor's expense. If unsuitable material is encountered at the depths indicated on the drawings for bottom limit of excavation, the Contractor shall immediately notify the OWNER and shall not proceed further until instructions are given.

6.7.7 The Contractor shall leave top surfaces of backfilled trenches free of loose materials and promptly remove and dispose of such materials from the site.

6.7.8 Prior to placement of permanent pavement, all trenches shall have sufficient compaction to achieve a 95% maximum dry density.

6.7.9 If there is a question as to whether sufficient compaction is achieved, as specified above, the Owner may require the Contractor to re-test the backfilled material to verify if ninety- five percent (95%) maximum dry density was achieved, as determined using the testing method specified in paragraph 6.7.3 of this section. If tests indicate the compaction fails to meet density requirements, the cost of re-testing shall be borne by the Contractor. If tests indicate the compaction meets density requirements, the cost of re-testing shall be borne by the Owner.

6.8 CLEARING AND GRUBBING

6.8.1 Clearing: Clearing within the construction area includes removing and disposing of tree limbs, vegetation, rotten wood, rubbish, and structures not specified for removal and disposal.

6.8.2 Grubbing: Grubbing shall be defined as removing from the ground and disposing of all stumps, roots and stubs, and other debris.

6.8.3 Protection of existing trees: Contractor shall protect existing trees and other vegetation indicated to remain in place, against unnecessary cutting, breaking or skinning of roots, skinning and bruising of bark, smothering (by stockpiling

construction materials or excavated materials within the drip line), excess foot and/or vehicular traffic, and parking of vehicles within the drip line. At the direction of the City Tree Warden, the Contractor shall provide temporary fences or coverings as required to protect the trees and vegetation to be preserved.

6.8.4 As directed by the City Tree Warden, root pruning shall be performed wherever existing grades will be lowered to accommodate pavement installation at grade with adjacent panels or other pavement structures.

6.8.5 All waste material must be removed from the site and disposed of per RIDEM requirements.

Repair/Restoration

7.1 REPAIR/RESTORATION

7.1.1 The Contractor shall be responsible for repairing any and all settlement of backfilled trenches and the cost said repairs shall be borne by the Contractor.

Cleaning

8.1 CLEANING

8.1.1 At the end of each work day and upon completion of all site work, the Contractor shall make all necessary provisions to leave the site in the same aesthetic condition as before construction and site work.

END OF SECTION

SECTION 05000

UTILITY PIPING

SECTION 05000
UTILITY PIPING

General Provisions

1.1 DEFINITION OF TERMS

1.1.1 This section pertains to all workmanship, materials, equipment, and incidentals required for the repair, removal, and/or installation of piping and appurtenances of water mains and service piping.

1.2 REFERENCES:

a.	ANSI A-21.4	Cement Mortar Lining for Ductile-Iron Pipe and Fittings
b.	ANSI A-21.10	Ductile-Iron and Gray-Iron Fittings
c.	ANSI A-21.11	Rubber-Gasket Joints for Ductile-Iron Pipe and Fittings
d.	ANSI A-21.51	Ductile-Iron Pipe
e.	ASTM A-48	Gray Iron Castings
f.	ASTM A-126	Gray Iron Castings for Valves, Flanges, and Pipe Fittings
g.	ASTM A-276	Stainless Steel Bars and Shapes
h.	ASTM A-536	Ductile Iron Castings
i.	ASTM A-576	Steel Bars, Carbon, Hot-Wrought, Special Quality
j.	ASTM D-429	Rubber Property-Adhesion to Rigid Substrates
k.	ASTM B88	Copper Tubing for Water Services
l.	ASTM D2000	Rubber Products
m.	AWWA C-104	Cement Mortar Lining for Ductile-Iron Pipe and Fittings
n.	AWWA C-153	Ductile-Iron and Gray-Iron Fittings
o.	AWWA C-111	Rubber-Gasket Joints for Ductile-Iron Pressure Pipe and Fittings
p.	AWWA C-151	Ductile-Iron Pipe
q.	AWWA C-504	Rubber-Seated Butterfly Valves
r.	AWWA C-509,C-515	Resilient Seated Gate Valves
s.	AWWA C-550	Protective Interior Coating for Valves and Hydrants
t.	AWWA M41	Ductile Iron Pipe and Fittings
u.	NSF/ANSI 61	Drinking Water System Components - Health Effects
v.	NSF/ANSI 60	Drinking Water Treatment Chemicals – Health Effects
w.	PW Policies	Requirements for Water Mains, Services, and Appurtenances
x.	SSPC-SP10	Near-White Blast Cleaning
y.	ISO 8179	Ductile iron pipes – External zinc-based coating
z.	ISO 2531	Ductile Iron Pipes, Fittings, Accessories and their Joints for Water Applications
aa.	AWWA C655-18	Field Dechlorination

1.2.1 Reference is made to “Appendix-B, Typical Construction Details”.

Submittals

2.1 SUBMITTALS

2.1.1 The Contractor shall provide submittals in accordance with Section 13 of "Section 01000 - General Requirements".

2.1.2 The Contractor shall submit for Owner's approval a list of materials including, but not limited to, all pipes, fittings and appurtenances to be installed as part of the work. In addition, all catalog cuts pertaining to the work shall be submitted.

2.1.3 The Contractor shall submit to Owner a list of equipment to be used for the removal and/or installation of water mains and appurtenances

2.1.4 The Contractor shall submit to Owner the method that shall be utilized for pressure and leakage testing of the mains after installation.

2.1.5 The Contractor shall submit to Owner the method that shall be utilized to disinfect the mains after installation.

Reference is hereby made to page 2 of "Section 00300, Information Available to Bidders", of these Contract Specifications, regarding the availability of the list of "List of Approved Materials/Manufacturers for use in the Providence Water Distribution System", as provided by OWNER as part of their Requirements for Water Mains, Services and Appurtenances.

Coordination

3.1 Refer to "Section 01000 – General Requirements, Article 7".

Materials

4.1 HANDLING MATERIALS

4.1.1 The Contractor shall use proper and suitable tools for safe and convenient handling of pipes, fittings and valves.

4.1.2 The Contractor shall take great care to prevent damage to protective coatings. Minor damage to exterior coating may be patched with asphalt. Materials with excessive

damaged to exterior coatings must be removed and replaced. If interior cement coating is damaged, the fitting or pipe will be deemed unacceptable and rejected.

4.1.3 The Contractor shall carefully examine all pipes and appurtenances for defects. No material is to be installed which is known to be defective. The Contractor shall replace, at his own expense, any defective material incorporated into the work.

4.1.4 The Contractor shall store all pipe, material, and appurtenances on site in conformance with Section 1000, General Requirements, Article 14.1.5. Before the conclusion of each day, the Contractor must examine the worksite to detect any unsafe conditions, or equipment and take **immediate corrective action.**

4.2 DUCTILE IRON PIPE

4.2.1 The zinc coated ductile iron pipe, to be furnished and installed by the Contractor under these specifications, shall be from manufacturers on the latest revision of the "The List of Approved Materials / Manufacturers for use in the Providence Water Distribution System, or approved substitutes, shall be manufactured in accordance with the standard specifications of the AWWA Designation C-151 (ANSI Designation A-21.51) newest edition, and amendments thereto without exception. Ductile iron pipe shall be Class 52. In areas of the system where "High Service Fire Mains" are present or other circumstances directed by OWNER, Class 56 ductile iron pipe shall be required.

4.2.2 Prior to delivery, all lengths of ductile iron must be secured with plastic bags on both ends.

4.2.3 Metalized detectable identification tape, 2-inches wide, blue in color and imprinted with the words "Caution - WATER LINE BURIED BELOW," shall be utilized over the new water main and all service lines from the main to curb stop. The tape shall be buried a depth of 18-24 inches below finished grade.

4.2.4 Cement mortar lining, seal coating, and admixtures shall be in accordance with AWWA C-104 (ANSI A-21.4) and compliant with ANSI/NSF-61(standards for material in contact with potable water), newest editions and as amended to date.

4.2.5 Zinc Coating - The exterior of ductile iron pipe shall be coated with a layer of arc-sprayed zinc per ISO 8179, newest edition and as amended to date. The external protective coating system shall be factory applied to ductile iron pipeline components as specified in ISO 2531. A finishing layer topcoat shall be applied to the zinc. The coating system shall conform in every respect to ISO 8179, newest edition and as amended to date.

4.3 DUCTILE IRON FITTINGS

4.3.1 The zinc coated ductile iron fittings, to be furnished and installed by the Contractor under

these specifications, shall be Rubber Seat Mechanical Joints. The fittings shall be standard length or short body castings conforming to AWWA Standard Ductile Iron Fittings specifications designation C-153 or ANSI Standard for Ductile Iron Fittings specifications designation A21.53, newest edition and as amended to date. Fittings shall be Class 350 and 250.

4.3.2 Cement mortar lining shall be in accordance with AWWA C-104 or ANSI A21.4, newest edition and as amended to date.

4.3.3 Zinc Coating - The exterior of ductile iron fittings shall be coated with a layer of arc-sprayed zinc per ISO 8179, newest edition and as amended to date. The external protective coating system shall be factory applied to ductile iron pipeline components as specified in ISO 2531. A finishing layer topcoat shall be applied to the zinc. The coating system shall conform in every respect to ISO 8179, newest edition and as amended to date.

4.3.4 Rubber gaskets for pipes and fittings shall be in accordance with AWWA specification designation C-111 or ANSI A21.11, newest edition and as amended to date.

4.4 RESILIENT SEATED GATE VALVES

4.4.1 Valves up to 12 inches in diameter shall be resilient seated gate valves, to be furnished and installed by the Contractor under these specifications, shall conform to the latest edition of the AWWA specification designation C-509.

4.4.2 Valves shall be equipped with all accessories including, but not limited to, retainer glands, bolts and gaskets.

4.4.3 Valves shall be designed for 200 pounds per square inch working water pressure and tested to 400 pounds per square inch hydrostatic shell tests.

4.4.4 End connections shall be mechanical joints. Ends shall have a clear waterway equal to the full nominal diameter of the valve. The waterway shall be smooth and have no depressions or cavities in the seating area where foreign material can lodge or collect.

4.4.5 Gate valves shall **open right** and an arrow shall be cast in a standard two-inch square operating nut. The operating nut shall be painted red. The operating stem and nut shall be configured in a way that a “valve box aligner” device can be installed prior to the installation of the valve box and backfilling.

4.4.6 A minimum of two (2) O-rings shall be fitted into the grooves that shall be located in the seal plate. The O-rings shall seat against a smooth bronze stem surface. The design of the seal plate shall be such that it can be fitted with new O-rings while the valve is under pressure and in the fully open position.

4.4.7 All seals between parts such as Seal Plate-to-Bonnet and Bonnet-to-Body shall be Buna N O-rings.

4.4.8 The stem shall be bronze with an integral thrust flange. Located above and below the thrust flange shall be an O-ring and anti-friction device to reduce operating torque.

4.4.9 The torque required to open a fully closed value under 100 psi pressure on one side shall not exceed 100 ft-lbs and the torque required to fully close a valve under the flow conditions of 10 fps shall not exceed 100 ft-lbs. Valves must be able to withstand an input torque of 300 ft-lbs with no distortion of the stem or other damage to the valve.

4.4.10 The waterway inside the body of the valve shall be free of pockets, channels, cavities, depressions or obstructions in the seat area.

4.4.11 The gate shall have a vulcanized synthetic rubber coating that utilizes a rubber seating edge at the bottom which will eliminate the possibility of entrapment of foreign material.

4.4.12 The valve shall be designed so no metal fasteners or screw other than the stem and stem nut are exposed to water. Bonnet bolts, seal plate bolts, stuffing box bolts and other bolts in contact with soil shall be manufactured of stainless steel.

4.4.13 All interior and exterior ferrous parts, including the interior of the gate shall be coated with a fusion-bonded epoxy coating with a minimum thickness of 8 mils. **Said coating shall be nontoxic, impart no taste to water and shall conform to NSF 61 and AWWA C-550 or the latest revision.**

4.4.14 The resilient seated gate valves, to be furnished and installed by the Contractor under these specifications, shall be from manufacturers on the latest revision of the "List of Approved Materials / Manufacturers for use in the Providence Water Distribution System", or approved substitutes.

4.4.15 All valve connections at work limit terminations shall be restrained to the new piping for future work in adjacent areas.

5.1 RESILIENT SEATED TAPPING VALVES

5.1.1 The resilient seated tapping valves, to be furnished and installed by the Contractor under these specifications, shall conform to the latest edition of the AWWA specification designation C-509. Where otherwise noted, all tapping valves shall conform to Section 5.4 Resilient Seated Gate Valves.

5.1.2 Valves shall be equipped with all accessories including, but not limited to, glands, bolts and gaskets.

5.1.3 Valves shall be designed for 200 pounds per square inch working water pressure and tested to 400 pounds per square inch hydrostatic shell tests.

5.1.4 End connections shall be mechanical joint on one end and be flanged on other with ANSI 150 lb drilling. Ends shall have a clear waterway equal to the full nominal diameter of the valve to accommodate full size cutters. The mating valve flange to the tapping sleeve outlet must have a raised male face to insure true alignment of valve and tapping machine. The waterway shall be smooth and have no depressions or cavities in the seating area where foreign material can lodge or collect.

5.1.5 Tapping valves shall **open right** and an arrow shall be cast in a red painted standard two inch square operating nut.

5.1.6 The design of the valve shall be such that the seal plate can be fitted with new O-rings while the valve is under pressure and in the fully open position.

5.1.7 All seals between parts such as Seal Plate-to-Bonnet and Bonnet-to-Body shall be Buna N. O-rings.

5.1.8 The stem shall be bronze with an integral thrust flange. Located above and below the thrust flange shall be an O-ring and anti-friction device to reduce operating torque.

5.1.9 The gate shall have a vulcanized synthetic rubber coating that utilizes a rubber seating edge at the bottom which will eliminate the possibility of entrapment of foreign material.

5.1.10 The valve shall be designed so no metal fasteners or screws, other than the stem and stem nut, is exposed to water. All interior and exterior ferrous parts, including the interior of the gate or wedge shall be coated with a fusion-bonded epoxy coating with a minimum thickness of 8 mils or use stainless steel fasteners. **Said coating shall be nontoxic, impart no taste to water and shall conform to AWWA C-550 and NSF 61 or the latest revision.**

5.1.11 The resilient seated tapping valves, to be furnished and installed by the Contractor under these specifications, shall be from manufacturers on the latest revision of the (List of Approved Materials / Manufacturers for use in the Providence Water Distribution System), or approved substitutes.

5.2 TAPPING SLEEVES

5.2.1 Tapping sleeves shall be two piece, epoxy-coated, fabricated steel or full circle stainless steel rated for at least 150 psi working pressure. Stainless steel tapping sleeves shall be utilized for all applications. Epoxy coated fabricated steel tapping sleeves shall only be utilized where there is no stainless steel alterative, such as, tapping large diameter pipe.

5.2.2 Stainless steel tapping sleeves, to be furnished and installed by the Contractor under these specifications, shall be manufactured by the Smith Blair Co. – Model 664, JCM – Model 432 or approved equal. All tapping sleeves shall meet or exceed the ANSI/AWWA C-223 Standards.

5.2.3 Tapping sleeves shall be supplied with test plugs and flanged outlets. The test plug shall be 3/4" NPT with standard square head.

5.2.4 The flange shall be 18-8 Type 304 Stainless Steel or epoxy coated steel with recess to accept standard tapping valves.

5.2.5 Bolts shall be self-aligning, 18-8 Stainless Steel. Bolts are to be fluorocarbon coated.

5.2.6 The tapping sleeves, to be furnished and installed by the Contractor under these specifications, shall be from manufacturers on the latest revision of the (List of Approved Materials / Manufacturers for use in the Providence Water Distribution System), or approved substitutes.

5.3 BUTTERFLY VALVES

5.3.1 Valves sixteen (16) inches and larger shall be butterfly-type and suitable for direct burial. The butterfly valves, to be furnished and installed by the Contractor under these specifications, shall conform to the latest edition of the AWWA standard specification designation C-504 for Class 150B and shall exceed the standard where specified with special attention to section 5.2.2.1 of the standard relating to the pressure testing and acceptance of the valves. The manufacturer must furnish a certified statement that proof-of-design tests were carried out and all requirements were met per Section 5.2.4.1 of the standard. Additional site testing, at the direction of the OWNER, may be required for valves on critical transmission mains. **This product shall be certified as suitable for contact with drinking water by an accredited certification organization in accordance with ANSI/NSF Standard 61, Drinking Water System Components – Health Effects.** In areas within the system where working pressure is 100 psi or higher, Class 250 butterfly valves are required.

5.3.2 Valve Bodies shall be constructed of cast iron ASTM A126 Class B or ASTM A48 Class 40 and conform to AWWA C504 in terms of laying lengths and minimum body shell thickness. Body ends shall have mechanical joints (MJ), complete with all accessories, in accordance with the latest revision of AWWA C111. MJ bolts shall be U.S. "Cor-Ten" steel, or approved equal.

5.3.3 The Valve Interior and Exterior Surfaces except for seating shall be coated in accordance with AWWA C550 and C504. All internal and/or external surfaces shall be covered with a polyamide cured epoxy coating applied per SSPC-SP10 with a coat thickness compliant

with AWWA C550. Said coating shall be nontoxic and impart no taste to water.

5.3.4 Valve Discs shall be made from cast iron ASTM A-126 Class B in sizes 20" and smaller. Sizes 24" and larger shall be built from ductile iron in conformance to ASTM A-536. Disc shall be furnished with Type 304 or 316 stainless steel seating edge to mate with the rubber seat on the body. Discs shall be capable of maintaining a bubble-tight seal at 150 psi, in either direction.

5.3.5 Valve Actuators shall be fully grease packed and have stops in the open/close position. The actuator shall have a mechanical stop which will withstand an input torque of 450 ft. lbs. against the stop. The traveling nut shall engage alignment grooves in the housing. The actuators shall have a built-in packing leak bypass to eliminate possible packing leakage into the actuator housing. Actuator stem extension rods shall be furnished and installed at the request of the Owner, as required.

5.3.6 Valve Shafts shall be Type 304 stainless steel conforming to ASTM A-276. Shaft seals shall be standard self-adjusting split V packing. Shaft seals shall be of a design allowing replacement without removing the valve shaft. Valve Bearings shall be sleeve type that are corrosion resistant and self-lubricating.

5.3.7 The actuator stem shall have at least one (1) O-ring. It shall function as a dirt seal and prevent ground water from entering the actuator housing. A thrust washer of Teflon, or approved equal, shall be used directly above and below the actuator stem collar.

5.3.8 The operating nut shall be 2 inches in size, painted red, and shall open right (clockwise). The operating stem and nut shall be configured in a way that a “valve box aligner” device can be installed prior to the installation of the valve box and backfilling.

5.3.9 Valve Seat shall be Buna-N rubber (or approved equal designated for potable water applications) located on the valve body. Reclaimed rubber is not acceptable. The mating seat surface shall be Type 304 or 316 stainless steel. In sizes 20" and smaller, valves shall have bonded seats that meet test procedures outlined in ASTM D-429 Method B. Sizes 24" and larger shall be retained in the valve body by mechanical means without use of metal retainers or other devices located in the flow stream.

5.3.10 The butterfly valves, to be furnished and installed by the Contractor under these specifications, shall be from manufacturers on the latest revision of the List of Approved Materials / Manufacturers for use in the Providence Water Distribution System, or approved substitutes.

5.4 STRAIGHT AND TRANSITION PIPE COUPLINGS

5.4.1 The center and end rings of couplings shall be modular ductile iron or epoxy coated steel, meeting or exceeding ASTM A536 and ASTM A576. The coupling shall accommodate

the entire O.D. range in the specified size, and shall meet or exceed AWWA Standard Specification AWWA C219-01.

5.4.2 The coupling gasket shall be made of virgin rubber or a EDPM compound for water use. The gasket shall have raised lettering and sizing and state the proper color code for the appropriate end ring or be designed with a muti-layered wide range removable outer layer.

5.4.3 The coupling shall have ANSI 304 grade stainless steel bolts with heavy hex nuts which conform to the latest edition of the AWWA specification designation C-111.

5.4.4 The couplings, to be furnished and installed by the Contractor under these specifications, shall be from manufacturers on the latest revision of the List of Approved Materials / Manufacturers for use in the Providence Water Distribution System, or approved substitutes.

5.4.5 All coupling connections at work limit terminations shall be restrained to the new piping for future work in adjacent areas.

5.5 FIRE HYDRANTS

5.5.1 The fire hydrants to be furnished and installed by the Contractor under these specifications shall be dry-barrel, post-type, and conform to the latest edition of the AWWA specification designation C-502. The main hydrant valve shall be a compression-type that opens against pressure in the main. The main valve shall have a 5 1/4-inch opening and shall be constructed of solid rubber that may be reinforced with steel. The bottom cap nut shall be bronze or epoxy coated ductile iron or cast iron. An O-ring seal shall be provided in the main valve assembly to ensure that water cannot leak from the hydrant boot, or shoe, into the hydrant barrel or drainway. All O-ring seals in the main valve area shall seat against bronze or epoxy coated cast iron. Also, hydrants shall have a bronze seat ring threaded to a bronze sub-set (NOTE: threads of the main valve seat ring shall not be designed as a sealing thread.)

5.5.2 Drainways shall be manufactured of nautical brass, bronze, epoxy-coated cast iron, or an approved substitute. A minimum of two (2) drain ports shall be provided with a minimum net diameter of 1/4-inch. Drain valves shall momentarily force flush each time the hydrant is operated.

5.5.3 Hydrants shall **open right** and shall utilize a breakaway design. Each hydrant shall have two (2) 2-1/2-inch hose nozzles, 180-degrees apart and one (1) 4-1/2-inch steamer port nozzle, unless designated as a “Special High Service Hydrant” which would be ULFM rated and have three (3) 2-1/2 inch hose nozzles. All nozzle threads shall be National Standard Thread (NST). Lead shall not be used to secure nozzles to the hydrant barrel. Nozzle caps shall be cast iron and shall be secured to the hydrant barrel with rustproof steel chains.

5.5.4 The hydrant bonnet shall be designed so that no part of the threads of the operating stem shall be in contact with water. Two (2) O-rings shall be used to accomplish this. Also, one (1) O-ring shall be used to seal the upper end of the operating mechanism from atmospheric moisture. The operating valve stem shall be sheathed with nautical brass or bronze where it contacts the lower O-rings. All temperature grease shall be used as a lubricant for the operating rod threads. Oil is not acceptable. **The grease shall be certified by the National Sanitation Foundation (NSF 61) as "nontoxic and safe for use in contact with potable water supplies".** Changing the main valve and seat shall only require removal of the bonnet and lubrication chamber or bonnet and seal plate.

5.5.5 Hydrant inlets shall be mechanical joints (MJ) with all accessories, and shall accommodate 6-inch ductile iron pipe and cast iron pipe, when requested. All MJ bolts and nuts shall be "Cor-Ten" or an approved substitute. Interior surfaces of the boot, or shoe, shall be epoxy-coated.

5.5.6 The exterior of the hydrants, above the ground line, shall be painted with one (1) coat of primer and two (2) finish coats of "Ivy Green" paint that will produce a surface to which subsequent coats of paint, having a linseed oil base, will readily adhere. The bonnet of the hydrant shall be painted, in the same manner, to match existing color ("Safety Yellow").

5.5.7 Hydrants shall be designed so that when properly installed a standard 15-inch hydrant wrench will not contact the ground when making a full 360-degree turn on any nozzle cap. Hydrants shall have a minimum vertical distance from the center of the steamer port nozzle to the shoulder of the operating nut (lower most part of the hydrant wrench) of nine (9) inches.

5.5.8 The hydrants, to be furnished and installed by the Contractor under these specifications, shall be from manufacturers on the latest revision of the List of Approved Materials / Manufacturers for use in the Providence Water Distribution System, or approved substitutes.

5.5.9 Hydrants must be "hydra-shield custodian" ready. Typical low service hydrants must be installed at a depth of five (5) feet. Typical high service hydrants must be installed at a depth of five (5) feet six (6) inches. For replacement of existing hydrants the depth should be determined prior to installation to assure that new hydrant is installed at the prescribed depth.

5.5.10 Hydrant extension kits and traffic repair kits shall be available **from the manufacturer** as an off-the-shelf item for the hydrant supplied to the Owner. Kit components shall be those manufactured by the original hydrant manufacturer and considered original equipment. Substitutes shall not be allowed under **any** circumstances.

5.6 WATER SERVICE LINES

5.6.1 All water service piping and goosenecks, 2-inch diameter and smaller, shall be ASTM B88-03, Type K, soft-temper copper water service tubing. The name and trademark of the manufacturer shall be stamped along the pipe.

5.6.2 Tubing for water services over 100 ft. long shall be polyethylene C T S water service tubing (PE 3408) with a 200-psi pressure rating in accordance with AWWA Standard Specification C-901.

5.6.3 All water service lines shall have a metalized, 2" wide, detectable identification tape - "water line buried below" - installed 18"-24" below finished grade directly above the water service line.

5.7 COUPLINGS

5.7.1 The couplings to join existing lead or copper services to new copper services, to be furnished and installed by the Contractor under these specifications, shall be from manufacturers on the latest revision of the "List of Approved Materials/Manufacturers for use in the Providence Water Distribution System", or approved substitutes. The couplings shall be the "lead-free" brass compression style couplings for use with service piping (tubing), or the polypropylene compression couplings as specified herein. **The conventional brass couplings shall be utilized for service connections when the house (building) foundation is less than ten (10) feet from the curb stop location. The polypropylene couplings shall be utilized for service connections when the foundation is greater than ten (10) feet from the curb stop location.**

5.7.2 Brass compression couplings shall be manufactured in accordance with AWWA Standard C800 and shall be "Lead-Free" as defined for lead-free brass alloys in accordance with the ANSI/NSF-60 and ANSI/NSF-61 standards for components in contact with potable water. These products shall have the letters "NL" or "LF" cast into the main body of coupling for proper identification.

5.7.3 Polypropylene compression style connection fittings, which serve as couplings or adapter couplings for service piping connections, shall be manufactured in accordance with the pressure requirements of AWWA Standard Specification C800, and shall be suitable for use with copper, lead, polyethylene and steel service piping. Polypropylene couplings shall also comply with the ANSI/NSF-61 standards for components in contact with potable water. Couplings for use with lead services shall accommodate lead service sizes ranging from 5/8-inch to 1-1/4-inch. The specified polypropylene compression fittings (or couplings) shall be the Philmac UTC design style, as manufactured by the Harrington Corporation (Harco), Lynchburg, VA.

5.8 CORPORATION STOPS AND SERVICE SADDLES

5.8.1 The corporation stops, to be furnished and installed by the Contractor under these specifications, shall be from manufacturers on the latest revision of the "List of Approved Materials / Manufacturers for Providence Water Distribution System", or approved substitutes.

5.8.2 Corporation stops shall be manufactured in accordance with AWWA Standard C800 and shall be "Lead-Free" as defined for lead-free brass alloys in accordance with the ANSI/NSF- 60 and ANSI/NSF-61 standards for components in contact with potable water. These products shall have the letters "NL" or "LF" cast into the main body of corporation stop for proper identification.

5.8.3 The inlet thread of all corporation stops shall be AWWA Standard CC inlet thread for their respective sizes. The outlet of all corporation stops shall be provided with compression couplings for type "K" copper service pipe for their respective sizes.

5.8.4 Service saddles shall be utilized for all connections to asbestos-cement (transite) pipe and for 1-1/2" and 2" connections on all other pipe. Service saddles, which are to be furnished and installed by the Contractor under these specifications, shall be constructed of Epoxy Coated Ductile Iron with a body curvature designed to fit pipes accurately with a broad pressure activated gasket to provide uniform sealing pressure Service saddles shall have double straps.

5.8.5 The saddle clamp must be furnished with a tapped outlet with full length threads that meet AWWA Standards for corporation stops, and shall be from manufacturers on the latest revision of the "List of Approved Materials / Manufacturers for use in the Providence Water Distribution System", or approved substitutes.

5.8.6 The saddle's double straps, bolts, nuts and washers shall be 18-8 stainless steel with all welds passivated for resistance to corrosion. The combined strap width shall be 3-1/4" wide to provide a wide stance on the pipe.

5.8.7 A neoprene or virgin rubber gasket must be bonded into a cavity in the saddle body to provide a pressure tight seal on a water main.

5.8.8 New corporation stops shall be installed in the same location as the existing. The existing corporation stop shall be removed from the main using the tapping machine with the extraction tool and the new stop shall be installed after drilling for the larger corporation.

5.9 CURB STOPS

5.9.1 The curb stops, to be furnished and installed by the Contractor under these specifications, shall be from manufacturers on the latest revision of the "List of

Approved Materials / Manufacturers for use in the Providence Water Distribution System", or approved substitutes.

5.9.2 Curb stops shall be manufactured in accordance with AWWA Standard C800 and shall be "Lead-Free" as defined for lead-free brass alloys in accordance with the ANSI/NSF-60 and ANSI/NSF-61 standards for components in contact with potable water. These products shall have the letters "NL" or "LF" cast into the main body of curb stop for proper identification.

5.9.3 Curb stops shall be ball valve type with combined cap and tee and shall be provided with a positive stop at fully open and fully closed.

5.9.4 The inlet and outlet ends of the curb stops shall be provided with compression couplings for Type "K" copper service pipe for their respective sizes.

5.9.5 The curb stops to be furnished under these specifications shall "OPEN TO THE RIGHT - CLOCKWISE."

5.10 CURB SERVICE BOXES

5.10.1 The extension service boxes, to be furnished and installed by the Contractor under these specifications, shall be from manufacturers on the latest revision of the "List of Approved Materials / Manufacturers for use in the Providence Water Distribution System", or approved substitutes.

5.10.2 Curb boxes for ¾ and 1" services shall be Erie style type boxes with an arch or bell bottom, and shall be so constructed as to permit the total length of the box to be adjusted from not less than 4 ½ feet to 5 ½ feet.

5.10.3 The upper section of the box shall not be less than one (1) inch in diameter and provided with a suitable and removable cover. The covers for all curb boxes shall be screwed to top section, have a bronze pentagon plug, and have the word "Water" cast into them.

5.10.4 The boxes shall be constructed so as to prevent the separation of the upper section from the lower section and to prevent the upper section from turning when removing the lid.

5.10.5 The boxes shall be furnished with stationary rods extending up into the upper section to allow the use of a short wrench. The rod shall be stainless steel not less than 5/8 of an inch in diameter, the upper end of which shall be shaped to receive a curb stop operating wrench. The lower end of the rod shall be provided with a malleable iron fork to fit standard curb stop operating keys. A suitable pin shall be furnished to attach the rod to the key.

5.10.6 The boxes shall be coated both inside and outside with the manufacturer's standard paint or enamel.

5.10.7 The service box covers are to be furnished with a plug cover.

5.10.8 Curb boxes for 1-1/2 inch and 2-inch curb stops shall be constructed of a cast iron two section roadway style box, and shall have a 4-1/2 inch cover with the word "Water" cast into them, with an arched bell and foot bottom section. Curb stops shall be placed on a bedding of crushed stone to provide adequate drainage with suitable blocking on each side of the pipe to support the curb box bottom. At no time should the service box bottom rest or contact the service piping. Boxes shall be adjustable for a maximum burial depth of 5.5 feet.

5.11 VALVE / GATE BOXES

5.11.1 The valve / gate boxes, to be furnished and installed by the Contractor under this specification, shall be from manufacturers on the latest revision of the "List of Approved Materials / Manufacturers for use in the Providence Water Distribution System", or approved substitutes.

5.11.2 The valve / gate boxes shall be cast iron and furnished complete with covers. The cover shall be marked "Water."

5.12 GATE BOX ALIGNERS

5.12.1 All valves shall be installed with a valve box aligner to center the operating nut within the bell of the gate valve box bottom preventing shifting of the gate box during the backfill operation. Gate valve box aligners shall be used in every gate valve box installation.

5.13 AIR RELEASE ASSEMBLY

5.13.1 The contractor shall furnish and install air release assemblies as indicated within the Contract Documents or otherwise directed by the Owner.

5.13.2 Air release assemblies shall consist of a corporation stop, two ninety (90) degree elbows, two brass nipples, a curb stop, two gate boxes, and a stand pipe and cap. The Contractor will be required to contact the OWNER for specific material, size, and assembly requirements.

5.14 BLOWOFF ASSEMBLY

5.14.1 The contractor shall furnish and install blowoff assemblies as indicated within the Contract Documents or otherwise directed by the Owner.

5.14.2 A 2" blow off assembly shall be used at the terminus of a "dead end" main. It consists of the following 2" diameter components: tapping saddle, brass nipples, brass elbow, curb stop valve (open "RIGHT") with drain, galvanized pipe, ductile iron end cap (MJ) for main, poured concrete thrust block, cast iron 4 1/4" gate valve roadway box, and cast iron 5 1/4" gate valve box. Components shall be joined together with iron pipe threads.

5.14.3 2" Blow off assemblies shall be as manufactured by Wedge Manufacturing.

5.15 SWING-CHECK VALVES

5.15.1 Swing-check valves shall utilize iron-body bronze-mounted (IBBM) design. They may employ metal-to-metal or composition-to-metal seat construction. Working pressure shall be 175 psi for valves up to 12-inches and 150 psi for those 16-inches and larger.

5.16 THRUST BLOCKS

5.16.1 The Contractor shall furnish and install all concrete for thrust blocks.

5.16.2 Cement shall be domestic Portland Cement conforming to ASTM designation C150, Type II (Rhode Island Department of Transportation Class "B").

5.16.3 Fine aggregate shall be natural sand conforming to ASTM designation C33.

5.16.4 Coarse aggregate shall be well graded stone conforming to ASTM designation C33 Size No. 67.

5.16.5 The Cement Concrete shall develop a minimum compressive strength of 3000 psi at 28-days.

5.16.6 Concrete for thrust blocks shall be placed where directed, with rough side forming or stone bulkheads as required, in such manner as to transmit pipe thrust leads against the undisturbed earth of the trench walls. Concrete materials, mixing, handling and placing shall conform to all applicable requirements of the latest revision to the State of Rhode Island, Department of Transportation, Standard Specifications for Road and Bridge Construction. Vertical Fittings and Rods.

5.16.7 Vertical fittings shall be anchored to thrust blocks using at least two (2) #5 (5/8-inch

minimum), Grade 60, deformed steel rebars. Blocks shall be designed by a professional engineer for pipe sizes greater than 12-inches. Anchors shall be bent to match to outside radius of the fitting to be restrained.

5.17 CRUSHED STONE

5.17.1 Reference is made to Section 02000, Earthwork, for crushed stone requirements.

5.18 INSERTION VALVES

5.18.1 General: Insertion Valves, of the sizes required and directed by the Owner, shall be a resilient wedge gate valve, of ductile-iron construction with a 250 psi operating (working) pressure rating, designed for use in potable water applications. The design will allow the valve to be installed into an existing pressurized water main while maintaining constant pressure and service. Whereupon the wedge is closed and the valve body is adequately restrained, the downstream pipe can be completely removed and replaced.

5.18.2 Ductile Iron Construction: The ductile iron body, bonnet and wedge shall meet or exceed the requirements of AWWA Standard C-515. The ductile-iron construction of the insertion valve shall be in accordance with ASTM A536 Grade 65-45-12.

5.18.3 Water Main Sizes: Insertion valve sizes of 12" and smaller must be suitable for use with Cast/Grey Iron or Ductile Iron Class A, B, C and D pipe diameters, or AC pipe diameters without changing either top or bottom portion of split valve body.

5.18.4 Working Pressure: The insertion valve shall be rated for a maximum working pressure of 250 psig. The pressure rating marking shall be cast into the body of the insertion valve.

5.18.5 Resilient Wedge Gate: The construction of the resilient wedge gate assembly shall comply with the requirements of AWWA Standard C-509. The ductile iron wedge shall be fully encapsulated with EPDM rubber to ensure that the ductile iron gate is fully coated with molded rubber with no exposed iron. The resilient wedge shall seat on the valve body and not the existing water main piping to obtain the optimum seating and flow control results. The resilient wedge shall be totally independent of the existing water main (carrier pipe) and shall not come into contact with the carrier pipe or depend on the carrier pipe to create a seal. Pressure equalization on the down or upstream side of the closed wedge shall not be necessary to open the valve. The wedge shall be symmetrical and seal equally well with flow in either direction. The resilient wedge must travel inside the body channels to maintain wedge alignment throughout its travel to achieve maximum fluid control regardless of high or low flow pressure or velocity. The flow way shall be oversized and unobstructed so as to provide optimum flow.

5.18.6 Epoxy Coating: The insertion valve is fully epoxy coated on the interior and the exterior. The required fusion-bonded coating is also applied to the bolt holes and body-to-bonnet flange surfaces. The insertion valve shall be coated with a minimum of 10 mils epoxy in compliance with AWWA Standard C-550 and certified in accordance with ANSI/NSF-61.

5.18.7 O-Ring Stem Seals: The design of the insertion valve includes triple O-Ring stem seals, which consists of two O-Rings located above the thrust collar and one O-Ring located below the thrust collar. The lower two O-Rings provide a permanently sealed lubrication chamber for prolonged valve operation. The upper O-Ring ensures that sand, dirt or grit cannot enter the valve to cause damage to the lower O-Rings. Side flange seals shall be of the O-Ring type of either round, oval, or rectangular cross-sectional shape.

5.18.8 Valve Stem: The gate valve stem and wedge nut shall be copper alloy in accordance with Section 4.4.5.1 of the AWWA Standard C-515. The non-rising stem (NRS) stem must have an integral thrust collar in accordance with Section 4.4.5.3 of AWWA Standard C-515. The wedge nut shall be independent of the wedge and held in place on three sides by the wedge to prevent possible misalignment. Two thrust washers are utilized with one located above the stem thrust collar and one located below the stem thrust collar. The NRS shall provide valve actuation with AWWA standard turns and be operated by 2" square wrench nut in accordance with ASTM A126 CL.B. The insertion valve shall "**Open Right**".

5.18.9 Bolting Materials: Bolting materials shall be manufactured in accordance with ASTM A307 with dimensions conforming to ANSI B18.2.1

5.18.10 Split Restraint Devices: Split restraint devices shall consist of multiple gripping wedges incorporated into a follower gland that meet the applicable requirements of ANSI/AWWA Standard C110/A21.10. The devices shall have a working pressure rating of 350 psi for the 4 inches through 12 inch pipe sizes. Ratings are for water pressure and must include a minimum safety factor of 2 to 1 in all sizes. Gland body wedges and wedge actuating components shall be cast from grade 65-45-12 ductile iron material in accordance with ASTM A536. Mechanical joint restraint shall require conventional tools and installation procedures per AWWA Standard C-600, while retaining full mechanical joint deflection during assembly as well as allowing joint deflection after assembly. Proper actuation of the gripping wedges shall be ensured with torque limiting twist off nuts. Set screw pressure point type hardware shall not be used. Restraint devices shall be listed by Underwriters Laboratories and Approved by Factory Mutual (3" through 12" inch size).

5.18.11 Maintenance Features: The stuffing box, operating stem and resilient wedge (complete bonnet and all moving parts) shall be removable, repairable and or replaceable while the valve is fully pressurized within the system. Whereupon the valve stem is broken or damaged, the bonnet can be removed under pressure. Internal pressure equalization

system assures the safe entry and removal of the valve bonnet during initial installation as well as future maintenance.

5.18.12 The specified Insertion Valve shall be the "InsertValve RW-Gate" as manufactured by TEAM Industrial Services, Alvin, Texas.

5.18.13 Insertion Valves: After the installation of the insertion valve body onto the existing pipe, a pressure test of 1.1 times that of the system operating pressure shall be sustained for a 15 minute period. Once the pressure test is effectively achieved, the insertion valve body must not be moved in accordance with AWWA Standards. Whereupon the insertion valve is moved, the pressure test must be performed and satisfactorily completed again. The insertion valve must not be moved or repositioned once the pressure test has been satisfactorily achieved.

5.19 ASBESTOS CEMENT (AC) PIPE RESTRAINERS

5.19.1 Restrainers shall be used on asbestos cement (AC) pipe connections to new ductile iron pipe.

5.19.2 Restrainers shall be JCM 630 Restrainer Series as manufactured by JCM Industries.

Equipment

6.1 PIPE SAW

6.1.1 When applicable and where directed by the Owner, the Contractor shall employ a pipe saw for field cutting of all pipe. The pipe saw shall produce a clean true cut, free from irregularities and leave a smooth end at right angles to the axis of the pipe. When the project requires large diameter pipe an air or hydraulic operated wrap around style saw may utilized to provide a true and square cut.

6.2 VALVE OPERATOR

6.2.1 When applicable and where directed by the Owner, the Contractor shall employ a Wachs TM6 type valve operator, or better, for opening and closing gate valves as required and/or directed.

6.3 VACUUM

6.3.1 When applicable and where directed by the Owner, the Contractor shall employ a Wachs TRAV-L-VAC 300 type vacuum, or better, for the removal of debris and/or water from gate boxes and manholes as required and /or directed.

Execution

7.1 INSTALLATION/REMOVAL

7.1.1 The Contractor shall perform and complete all work in accordance with the drawings and specifications. The Owner shall determine the amount, quality, acceptability, and fitness of all parts of the work completed. The Contractor shall perform all work in a workmanlike manner, with due diligence, and in a continuous and uninterrupted manner.

7.1.2 Removal of Existing Water Main - Existing water main removal from the system, for replacement, shall be removed from the trench in a manner as not to disrupt adjoining pipes/utilities. As the main is removed, ALL service connections shall be mechanically cut and sealed to prevent any debris from entering service tubing until such time the permanent connection to the new main is completed. All existing main connections shall be temporarily capped and restrained until such time the permanent connection to the system can be completed as detailed in Section 7.7.1.

7.1.3 Trench Excavation and Backfill - Water mains and services shall be installed with a minimum cover of 4'-6" to the crown of the pipe in an AWWA "Type 5 Trench". Where unsuitable material is found at or below the grade of the placement of the pipe or fitting, said material shall be removed to the required width and depth and replaced with thoroughly compacted bank run or processed gravel (Ref. Section 02000, Materials). Material shall be deposited across the full width and length of the trench in layers of not more than twelve (12) inches in depth, *before* compaction. Each layer shall be compacted to 95% Standard Proctor to a minimum depth of the street subgrade.

7.1.4 Compacted gravel bedding (12" min) shall be installed under the entire length of the pipe and across the full width of the trench. Firm bearing shall be achieved by tamping selected material at the sides of the pipe/fitting, up to the "spring line" (mid-point height).

7.1.5 Dig-Safe® is to be notified prior to commencement of work. Any broken or damaged utility connection or services (water, sewer, gas, telephone, electric, etc.) shall be fully repaired at the expense of the party responsible for the damage. Underground structures shall be thoroughly supported or otherwise protected to maintain uninterrupted service.

7.2 CONNECTING DUCTILE IRON PIPE

7.2.1 With the exception of MJ and flanged pipe, each section of ductile iron pipe comes complete with a spigot end and a bell & O- ring end. To connect the pipes, the Contractor shall slide the spigot end of one pipe into the bell and gasket end of another pipe. When directed by the Owner, a restraint style gasket (Field Lok) may be required in place of a standard Tyton gasket. See Restraint Guide Table at the end of this section. At all times it

will be required to lube the pipe to facilitate the connection. The pipe lubricant shall be a nontoxic vegetable based product as supplied by the pipe manufacturer, and be certified by the National Sanitation Foundation (NSF 61) as safe for drinking water use. All ductile pipe shall be installed adhering to the latest guidelines published by the Ductile Iron Pipe Research Foundation and AWWA standards manual M41- Ductile Iron Pipe and Fittings.

7.3 REPLACEMENT OF LEAD SERVICES

7.3.1 The Contractor shall install the service saddle if required, tap the existing or newly installed main, install the corporation stop, and install the copper tubing to a point approximately one (1) foot beyond the existing curb line or as directed by the Owner, to the new curb stop.

7.3.2 For lead services replaced within the scope of Cleaning and Lining rehabilitation contracts, the existing corporation stop shall be removed and replaced with a new corporation at the existing location on the main (unless otherwise obstructed).

7.3.3 The Contractor shall install a new curb stop and make connection to the existing service using a short section of copper tubing and a compression coupling (as delineated in Article 5.11 Couplings) on the property owner's side.

7.3.4 For operating purposes, the Contractor shall install a new curb box and rod as part of the completed curb stop installation. Upon completion of the overall curb stop assembly, the Contractor shall exercise the curb stop to ensure that the valve is functioning properly. The Contractor is reminded that the new curb stop shall be left in the same position (open or closed) as was found upon examination and inspection of the old (existing) curb stop.

7.3.5 All fittings and tubing shall be in accordance with OWNER specifications. The minimum depth to the top of the copper tubing shall be 4'-6".

7.3.6 The Contractor shall remove the existing lead service and curb box and restore the excavation to its original condition.

7.4 INSTALLATION OF COPPER SERVICES – PUBLIC SIDE

7.4.1 The Contractor shall direct tap or install a service saddle, if required; tap the existing or newly installed main; install the corporation stop; and install the copper tubing to the closest point on the existing copper service with a compression coupling to re-connect to the existing copper service.

7.4.2 SAll fittings and tubing shall be in accordance with OWNER specifications. The minimum depth to the top of the copper tubing shall be 4'-6".

7.5 INSTALLATION OF COPPER SERVICES – PRIVATE SIDE

7.5.1 When directed**,** the Contractor shall install a new private-side water service from the curb stop to the water meter within the basement of the building. The new water service installation shall be performed by trenchless technology methods, or by open-cut trench, depending on the existing conditions of the private property. Whenever possible, it is desirable that the Contractor will install the new copper water service by trenchless technology utilizing the pulling method so as to minimize disturbance of existing conditions and other features within the exterior grounds of the private property.

7.5.2 Whereupon the Contractor is directed to perform a private service replacement that will require the internal moling method for the installation of the private service, the Contractor will be required to cut and remove a portion of the existing basement floor in order to excavate a suitable access pit to perform the moling work within the interior of the building. The Contractor will hand-excavate to a suitable depth to accommodate the operations required for the trenchless means of underground pipe installation. The Contractor will be required to refill and compact the interior excavation, and replace that portion of the existing concrete basement floor that was cut, removed and disturbed as a result of the interior construction operations.

7.5.3 All exterior fittings and tubing shall be in accordance with OWNER specifications. The minimum depth to the top of the copper tubing shall be 4'-6". No couplings will be allowed for the new exterior service installation, which shall be continuous from the curb stop to the building.

7.5.4 The Contractor shall also perform interior plumbing work as part of the overall private service replacement. This work will consist of the installation of new ball valves on each side of the existing or new meter (as provided by OWNER), and the installation of all appurtenant interior copper piping and fittings required for the completed valve installations. This internal plumbing work will also require the installation of jumper pipe at the water meter location, and the installation of backflow prevention device. All materials and installations shall be in accordance with OWNER specifications and/or the local plumbing code.

7.5.5 If and when required, the Contractor shall also install additional interior plumbing equipment as part of the overall interior private service replacement work. This work will consist of the installation of new pressure reducing valve before the water meter, and the installation of a new expansion tank. This work will also include the all appurtenant interior copper piping and fittings required for the completed equipment installations. All materials and installations shall be in accordance with OWNER specifications and/or the

local plumbing code.

7.5.6 All exterior fittings and tubing shall be in accordance with OWNER specifications. The minimum depth to the top of the copper tubing shall be 4'-6". No couplings will be allowed for the new exterior service installation, which shall be continuous from the curb stop to the building.

7.6 INSTALLATION OF FIRE HYDRANTS

7.6.1 The Contractor shall utilize an anchor tee fitting, as opposed to a tapping sleeve and valve approach for a newly installed water main. At the necessary locations, the Contractor shall cut the new ductile iron main and install an anchor tee fitting to provide a service to the new hydrant. Tapping sleeve and valve for hydrant installation shall be utilized only with prior OWNER approval.

7.6.2 Locations of new hydrants shall be as near to the replacement hydrants as possible or as per contract drawings.

7.6.3 Hydrants shall be set plumb with the steamer port facing the roadway. Hydrants shall be positioned with the center of the operating nut 24-inches back from the face of the curb or as required by the local fire chief.

7.6.4 The hydrants shall be set so that the manufacturer's "bury" mark or ground line is at finished grade. If there is no "bury" mark on the hydrant, the bottom of the breakaway feature shall be set at a minimum of 2-inches to a maximum of 4-inches above finished grade. Depths of bury shall be at least 4'-6". Hydrant base shall be set on either a flat stone or a concrete base that is at least 14-inches square and 6-inches thick.

7.6.5 Hydrants shall be restrained using poured concrete thrust blocks along with a mechanical restraining device such as the "Megalug" or strapped back to the hydrant gate valve.

7.6.6 A drainage pit shall be excavated below and around each hydrant and backfilled to a height of at least 6-inches above all drain ports with at least one (1) cubic yard of 1/2" to 1-inch washed crushed stone. The stone shall be compacted prior to backfilling and compaction of the hydrant. Aggregates shall be covered with a layer of non-woven filter fabric to lessen the intrusion of fine soil particles into the stone.

7.6.7 Hydrants shall be fed from the main with a 6 or 8-inch ductile iron lateral (8-inch is used when hydrant laterals exceed 10 feet). A resilient seated gate valve (MJ) shall be installed in the lateral between the tee and the hydrant. Special anchor or swivel tees (MJ) shall be used to connect the hydrant branch to the main.

7.6.8 As directed on the plans or at the OWNER's discretion, existing hydrants removed from service shall be properly disposed of by the Contractor. If the Contractor is directed **not** to remove an existing hydrant, and the hydrant is removed by OWNER forces, the

Owner shall be the responsible party for disposal.

7.7 CONNECTION TO EXISTING MAIN

7.7.1 The Contractor shall excavate; place processed stone on the excavation bottom; cut the existing main; dewater the excavation; clean the main; swab with a 50 ppm chlorine solution; install a tee; pour a concrete thrust block behind the tee; install the require fittings; and backfill and compact the excavation. After the connection is made, the existing water main shall be flushed until clear with the assistance of OWNER forces.

7.7.2 At the discretion and direction of the Owner, the Contractor shall make necessary excavations, install the tapping sleeve and valve, make the required size tap using a tapping machine or remove the existing end plug, and install the required fittings.

7.8 CUT AND PLUG EXISTING MAIN

7.8.1 The Contractor shall excavate, place crushed stone on the excavation bottom; cut the existing main; dewater the excavation; clean the main by spraying with a chlorine solution; install a cap; restrain cap back to the tee; pour a cement thrust block behind the cap; and backfill and compact the excavation.

7.8.2 The Contractor shall make cuts and plugs in the existing mains, at points shown on the Contract Drawings or where directed by the Owner, after the newly installed main is satisfactorily in service and all services have been transferred to the new main.

7.9 WATER MAINS AND APPURTENANCES ABANDONED IN PLACE

7.9.1 Water mains, water services, and hydrant runouts that are disconnected from the system and **abandoned in place** shall be capped at ALL openings.

7.10 INSTALLATION OF VALVES

7.10.1 The Contractor shall furnish and install valves at the locations designated on the Contract Drawings or where directed by the Owner.

7.10.2 All valves and fittings shall be carefully examined for defects and no piece shall be installed which is known to be defective. If any defective piece is discovered after having been installed, it shall be removed and replaced at the expense of the Contractor. All valves and fittings shall be thoroughly cleaned before they are installed and shall be kept clean until they have been accepted in the completed work.

7.10.3 Prior to installing butterfly valves, concrete blocks shall be firmly bedded on the

excavation bottom slightly below the grade of the finished valve. After the valve and fittings have been lowered into the trench, wedges shall be placed and adjusted so as to bring the valve and fittings to proper alignment and grade. Ductile Iron pipe, a minimum of 22 inches in length (assembled), shall be installed on both sides of the butterfly valve or as required to facilitate the installation of the new valve. Before backfilling occurs, the work shall be tested under pressure. Additional on-site testing may be required at the OWNER's discretion.

7.10.4 All valves and fittings shall be carefully examined for defects and no piece shall be installed which is known to be defective. If any defective piece is discovered after having been installed, it shall be removed and replaced at the expense of the Contractor. All valves and fittings shall be thoroughly cleaned before they are installed and shall be kept clean until they have been accepted in the completed work.

7.10.5 If leakage is visible, the Contractor shall do whatever is necessary to repair said leak at his own expense. Upon completion of the repair the work shall be retested.

7.11 AIR RELEASE ASSEMBLY

7.11.1 The Contractor shall drill and tap the water main and furnish and install the brass pipe, brass fittings, corporation stop, hydrant stop, drain and valve box necessary for the complete installation of the Air Release Assembly as per OWNER Standards.

7.12 BLOWOFF ASSEMBLY

7.12.1 The Contractor shall provide all materials, labor and equipment for the complete installation of the Blowoff Assembly as per OWNER Standards. The Contractor shall insure that the Blowoff Assembly is free to move vertically within the valve box and to surround the drain port with a sufficient amount of crushed stone to provide an adequate drain field.

7.13 THRUST BLOCKS

7.13.1 The preferred method of counteracting thrust is through the use of a mechanical joint restraint device. Concrete thrust blocks are allowed and may be used as an option to or in conjunction with a mechanical joint restraint device.

7.13.2 Thrust blocks shall be designed using a soil bearing strength of 1,500 pounds per square foot (psf). They shall be constructed in place using Portland cement concrete (R.I. Department of Transportation Class "B") having a 28-day compressive strength of at least 3,000 psi, and be located in such a way so as to bear against undisturbed earth. They shall be utilized on all water mains for the following conditions:

- Pipeline direction changes (tees, bends, etc.)
- Dead end lines (caps, plugs or hydrants)
- Transition pieces (reducers, offsets, etc.)

The sides of thrust blocks shall be formed. Forms shall be removed before backfilling commences. Curing time should be at least forty-eight (48) hours. Minimum bearing shall be that which is depicted on the plans or as directed by OWNER. Felt roofing paper shall be used to protect pipe joints. Concrete shall not be placed over bolts or nuts, or placed in such a way that will prevent the removal of joints (NOTE: concrete reaction blocks may be used when bearing against undisturbed soil cannot achieved).

7.14 OPERATION OF VALVES

7.14.1 Unless precluded by unexpected events, the Contractor shall notify the OWNER at least seventy-two (72) hours prior to a water main shutdown. The OWNER shall determine if the operation of valves will be performed by OWNER work forces, the Contractor, or a OWNER Subcontractor. **The immediacy of water main shutdowns or valve operation is not warranted by OWNER**. In the operation of valves, for the purpose of shutting down existing mains, the OWNER does not guarantee or imply that shut down will be completely effective in stopping the flow of water to open ends.

7.14.2 The Contractor must notify the OWNER and/or its representative at least seventy- two (72) hours prior to a water main shutdown. Prior to the shutdown notification, and whereupon OWNER authorizes the Contractor to operate valves, the Contractor shall locate, uncover buried valves, and clean the valve boxes, if necessary, and perform a preliminary test of the valves required to accomplish the shutdown, in order to assess the condition of the valve and its capability to achieve the shutdown. If a valve **within the scope of work** is found to be inoperable or not functioning properly and is required to complete a shutdown, it may be replaced out of sequence (as directed by OWNER) at no additional cost. Additionally if a valve **not within the scope of work** is found to be inoperable or not functioning properly and is required to complete a shutdown, the Contractor shall notify OWNER and/or its representative. Upon notification by the Contractor, OWNER will make the determination on whether the valve repair or replacement will be accomplished by the Contractor (at cost to the owner in accordance with the Bid Schedule Part 1, Items 8 to 11-1; or Part 6, Items 40 and 41), its own forces, or by an OWNER's contractor. The Contractor must notify OWNER and/or its representative of all problematic valves. Ultimately, OWNER will make the determination on whom will accomplish the valve repair or replacement, as delineated above. During the interim period, the Contractor shall locate other backup isolation valves and test in a like manner. The preparatory and/or explorative work required for a satisfactory shutdown shall be completed at no cost to OWNER.

7.14.3 As specified herein, the Contractor may be authorized to operate all valves required to shut down (and subsequently reopen) existing water mains under this contract. Whereupon the Contractor is unable to shut down a valve after two (2) hours of attempting to do so,

OWNER will direct the Contractor as to how to proceed. In order to complete the shutdown, it may be necessary to operate additional isolation valves not originally anticipated in the shutdown. There shall be no additional payment to the contractor for the operation of these auxiliary valves to achieve the shutdown.

7.14.4 When authorized, the operation of valves of any diameter, hydrants, and other water appurtenances for work associated with this contract shall be performed by the Contractor under the supervision of the OWNER and/or its representative. Valves shall be operated slowly, especially in the near closed position, so as to cause the least disturbance to the distribution system. Upon completion of the construction work in the area, all new and all existing valves that have been operated in conjunction with the contract work shall be checked for position by the Contractor in the presence of OWNER or its representative. All valves shall be left fully open unless otherwise directed.

7.14.5 During the required valve operations, packing leaks may appear on valves left in the closed position. Should this occur, OWNER will make the determination on whether to have the valve repaired to make it leak free by the Contractor, its own forces, or by another OWNER contractor.

7.14.6 In accessing and operating existing valves, the Contractor shall take the utmost care to protect the valve and appurtenances including the valve box assembly. The Contractor shall immediately notify OWNER or its representative of any pre-construction/existing damage of the valve and appurtenances such as a rounded operating nut, broken stem, cracked casting, or other observed conditions. Should the Contractor damage an existing valve or appurtenances through its own neglect, the Contractor shall repair or replace the asset to the satisfaction of OWNER and at no additional cost to OWNER.

7.14 SALVAGE AND DISPOSAL

7.14.1 Unless otherwise stated herein, or as directed by the OWNER or its Construction Manager, all existing water mains, valves, hydrants and appurtenances, which are removed as part of the contract work, shall be disposed of by the Contractor.

7.14.2 As the contract work progresses, OWNER will identify certain items, such as hydrants, valves, or parts thereof, including valve box covers, where OWNER will retain ownership. In these cases, OWNER forces will pick up the item in its entirety, or remove pertinent parts in the field for future use by OWNER. Upon completion of the pick-up or the removal of parts by OWNER forces, any remaining portions will be disposed of by the Contractor.

Field Quality Control

8.1 WATER MAIN PRESSURE AND LEAKAGE TESTS

8.1.1 GENERAL

8.1.2 The Contractor shall be responsible for the planning, coordination and execution of a combined pressure and leakage testing of water mains prior to them being placed in service. The pressure and leakage test shall be conducted in accordance with ANSI/AWWA C-600, except as modified herein.

8.1.3 After water main pipe has been installed, it shall be subjected to combined pressure and leakage test. Regardless of length of water main in a project, all segments shall be tested unless otherwise approved by OWNER.

8.1.4 Contract work shall remain separated from the existing distribution system, except for test connections, until the pressure/leakage test, and chlorination work has been completed, and connection to the water distribution system is approved by OWNER. Testing against closed valves shall be permitted only under special circumstances and with prior approval by OWNER.

8.1.5 Water required to fill the new water main for hydrostatic pressure testing, disinfection, and flushing shall be supplied through a temporary connection between the distribution system and the new main. The temporary connection shall include an appropriate double check valve backflow prevention device and shall be disconnected (physically separated) from the new main during the hydrostatic pressure test. It will be necessary to re-establish the temporary connection after completion of the hydrostatic pressure test to flush out the disinfectant water prior to final connection of the new water main to the distribution system. The source of potable water used for disinfection and pressure testing shall be flushed prior to its use to ensure that contaminates or debris are not introduced into the new pipe. Adequate drainage must be provided during flushing.

8.1.6 The Contractor shall perform all work necessary to complete testing. This shall include furnishing all labor, materials and equipment including pumps, gauges, charts, meters, and water source connections. Test gauges shall have pressure scale increments of no more than two (2) psi and have an operating range of 0 to 250 psi. The Contractor shall demonstrate that the test gauges have been tested, and that their calibration is certified within one year of the proposed date of the test. Otherwise, the test gauges shall be newly purchased.

8.1.7 The Contractor shall provide and install approved caps and plugs in sections to be tested. Openings in pipe and fittings shall be closed tight to prevent leakage. All temporary plugged and capped ends shall be properly blocked to prevent displacement and leakage. All fire hydrant laterals shall be installed and the hydrant control valves in the open position. The Contractor shall install water source and discharge connections to the isolated pipe section for test purposes as directed. If a water main tap is approved for test connection to new water main, the tap will be furnished and installed by the Contractor.

8.1.8 The Contractor shall fill and flush the new main to remove any air that may become trapped within the new piping. The new water main shall be filled no less than twenty four (24) hours prior to the start of testing procedures. Water utilized for this purpose, which is obtained directly from the OWNER's system, must flow through an approved backflow device that has been tested and certified to be in working condition at the time it is used for this purpose.

8.1.9 If the Contractor should choose to conduct tests prior to backfilling, he shall be responsible for providing and installing temporary blocking to properly restrain pipe. Temporary blocking shall be approved by OWNER prior to testing.

8.1.10 Upon test completion and approval of samples tested for bacteriological quality, the Contractor shall remove temporary caps, plugs and other temporary construction, and shall complete connections of new work to the water distribution system.

8.1.11 All materials and equipment furnished by the Contractor for water main testing, including closure caps, plugs and other temporarily required accessories, shall remain the property of the Contractor upon completion of testing.

8.2 FIELD PRESSURE AND LEAKAGE TEST

8.2.1 Each segregated section to be tested shall be subjected to a hydrostatic test pressure per subsection **8.3**, which shall:

a. Be of at least one hour duration; and

b. Be pressurized to 150 psi, or 1-½ times the working pressure of the existing main.

c. Not vary by more than ± 5 psi from the specified test pressure for the duration of the test.

8.2.2 Leakage shall not exceed the total computed from the Table 08-02-01 as determined by the following formula:

$$L = \frac{SD \times \sqrt{P}}{133{,}200}$$

Where:

L = Allowable leakage in gallons per hour
S = Length of pipe tested in feet
D = Nominal diameter of the pipe in inches
P = Average test pressure during the test in pounds per square inch

Pipe Size (in.)	Maximum Allowable Leakage Per 1,000 LF of Pipeline (Gallons / Hour)
4	0.37
6	0.55
8	0.74
10	0.92
12	1.10
14	1.29
16	1.47
18	1.66
20	1.84
24	2.21
30	2.76
36	3.31
42	3.86
48	4.41
54	4.97

*If the pipeline under test contains sections of various diameters, the allowable leakage will be the sum of the computed leakage for each size.

8.2.3 Any section that fails the pressure and leakage test shall be repaired by the Contractor. The Contractor shall then retest the section until approved at no additional costs to OWNER.

8.2.4 All visible leaks shall be repaired regardless of the amount of leakage.

8.3 PRESSURIZATION

8.3.1 Each section of pipe shall be slowly pressurized to the specified test pressure by means of an approved hydrostatic test pump connected to the pipe in a manner satisfactory to OWNER.

8.3.2 The system shall be allowed to stabilize at the test pressure before conducting the test.

8.4 AIR REMOVAL

8.4.1 Before applying the specified test pressure, air shall be expelled completely from the pipe, valves and hydrants. If permanent air valves are not located at all high points, the Contractor shall expose the entire pipe circumference at those points and install corporation cocks at such points so that trapped air can be expelled as the line is filled

with water.

8.4.2 After all the air has been expelled, the corporation cocks shall be closed and the test pressure applied.

8.4.3 At the conclusion of pressure and leakage tests, the Contractor shall remove the corporation cocks and plug the tapped holes with brass plugs.

8.5 EXAMINATION

8.5.1 Any damaged or defective pipe, fittings, valves or hydrants which are discovered following the pressure and leakage test, shall be replaced by the Contractor, and the test shall be repeated until work is satisfactory.

8.6 WATER MAIN DISINFECTION

8.6.1 Upon completion of installation and testing, the Contractor shall disinfect all water mains in the following manner:

a. The Contractor shall furnish and install suitable temporary testing plugs, caps, pumps, pipe connections and appurtenances, as necessary.

b. Water required to fill the new water main for hydrostatic pressure testing, disinfection, and flushing shall be supplied through a temporary connection between the distribution system and the new water main. The temporary connection shall include an appropriate double-check valve backflow prevention device and shall be disconnected (physically separated) from the new water main during the hydrostatic pressure test. It will be necessary to re-establish the temporary connection after completion of the hydrostatic pressure test to flush out the disinfectant water prior to final connection of the new water main to the distribution system. The source of potable water used for disinfection and pressure testing shall be flushed prior to its use to ensure that contaminates or debris are not introduced into the new pipe. Adequate drainage must be provided during flushing.

c. Pipes shall be completely filled with water, all air released, and then thoroughly flushed out in the amount of twice the capacity of the section to be treated. Chlorine liquid/gas, or other OWNER approved disinfection agents, shall be introduced into the new water main near the point of water supply, with OWNER approved Chlorine constant feed chemical injection equipment, in the concentration required (not less than 100 parts of available Chlorine per million parts of water [ppm]) to maintain residual concentrations at the end of the disinfection period, as specified.

d. The disinfecting solution shall be left in the mains under full pressure for a period of not less than 24 hours. Prior to flushing the water main, a sample shall be obtained from the water main to verify that a minimum Chlorine residual concentration of 50 ppm is present. The entire section shall then be flushed through a neutralizing agent until all traces of Chlorine are removed in accordance with AWWA Standard C655-18. NOTE: Under special circumstances approved by OWNER, a 3 hour disinfection period may be allowed with the requirement that a minimum Chlorine residual concentration 100 ppm is present in the main at the end of the disinfection period.

e. After completion of the final flushing of the new water main, and prior to connecting main to the distribution system and placing into service, two (2) consecutive sets of water samples from the new main **shall be taken by OWNER and delivered to OWNER's laboratory, at least 24 hours apart, to be analyzed for total coliform and heterotrophic plate count (HPC).**

f. Water samples shall be collected by the OWNER's representative, from only approved water sample locations. At no time shall bacterial samples be collected from Fire Hydrants without prior approval by OWNER and special procedures followed. Water sample shall be taken at every terminus of the main, also at points no further apart than 1,000 feet. Sample collection and analysis must be performed by OWNER's personnel and laboratory, at no additional cost to the contractor.

g. Any new water main or section of pipe failing to meet OWNER's laboratory standards for disinfection shall be flushed or re-chlorinated, at the discretion of the Owner, until the desired results are obtained.

h. The analytical results of the samples shall reflect what is typical of the distribution system in the area where the water main is replaced.

Parameters measured by the OWNER's laboratory:

- Total Coliform
- HPC (Heterotrophic Plate Count)
- Free Chlorine
- Total Iron

Required standards for acceptance:

- Total Coliform = Negative
- HPC = <30 Colonies per plate
- Free Chlorine = <0.90 ppm (acceptable range shall be 0.10 - 0.90 ppm)
- Iron = <0.30 ppm Total Iron

Samples that are visibly discolored due to elevated iron levels shall be rejected.

i. Connections at cuttings shall be swabbed with 50 ppm solution of Chlorine at locations when other methods are not applicable.

j. Chlorine, or other OWNER approved disinfection agents, shall be ANSI/NSF-60 certified for use in potable water.

8.6.2 Particular attention is directed to the requirement that a double-check valve installation shall be made in the water supply to the main under treatment, to prevent possible backflow or siphonage of chlorine treated solutions into the distribution system in service. At no time is an existing Valve separating a live water main to the new water main be opened for the purpose of flushing or filling a newly installed water main, until that new water main has been accepted by OWNER and placed into service.

8.6.3 Permission of the Owner must be obtained by the Contractor before any water main is placed into service.

8.6.4 Valves and Fittings

8.6.4.1 Before valves and fittings are installed, they shall be thoroughly disinfected in accordance with AWWA Standard C651. **Chlorine used for disinfection shall be ANSI/NSF-60 certified for potable water use.**

8.6.4.2 A solution of 50 mg/L available chlorine shall be applied directly to the surfaces of all parts of the valve and fittings that would be in contact with potable water.

8.6.4.3 The chlorine solution may be applied with suitable brushes or spray equipment. The solution shall thoroughly coat all surfaces to be treated.

8.6.4.4 The disinfected surfaces shall remain in contact with the strong chlorine solution for at least 30 minutes, after which the valve and fittings shall be rinsed with potable water. Following this procedure, the valve and fittings may be installed upon approval of the Owner.

8.7 WATER SERVICE LEAKAGE REPAIRS

8.7.1 Upon activation, the Contractor shall observe and check the new water service line for any visible leaks. The Contractor shall stop all visible leaks at the joints or connections, and remove and replace any cracked or defective piping, fittings, or valve.

8.8 WATER SERVICE DISINFECTION

8.8.1 Before the piping, curb valve and fittings are installed, they shall be disinfected in accordance with AWWA Standard C651. Chlorine used for disinfection shall be NSF 60 certified for potable water use.

8.8.2 A 50% chlorine solution shall be applied directly to the surfaces of the corporation stop, service piping, curb valve and fittings. The chlorine solution may be applied with suitable brushes or spraying devices. The solution shall thoroughly coat all surfaces to be treated.

8.9 WATER SERVICE FLUSHING

8.9.1 The Contractor shall open the corporation at the water main connection to perform a preliminary flushing and cleaning of the new service piping prior to connection to the existing private-side service piping.

8.9.2 Whereupon the final connection of the new service to the existing private service piping is completed, and the water service is activated, the Contractor will perform a final flushing of the overall service line utilizing the exterior faucet/hose bib of the house or building. The final flushing shall be performed for a minimum period of fifteen (15) minutes. If an exterior faucet is not available, or is inoperable, and a final flush cannot be performed, the Contractor shall deliver and place a "red" door-hanger notice, as provided by the Owner, at the home (building). This notice will advise the homeowner and/or resident to flush their internal plumbing.

8.9.3 The contractor must coordinate with OWNER before removing a lead water service from the bypass, and shall notify OWNER 24 hours prior to the final connection and activation of a new service line connection to an existing lead private side pipe.

8.10 WATER QUALITY SAMPLING AND TESTING

8.10.1 When a public-side lead service is removed, replaced with a copper service, reconnected to a private-side lead service, and after it is activated; the OWNER shall then make arrangements to obtain a water sample for lead testing at a certified testing laboratory. The Owner is responsible for obtaining the water samples and the costs associated with the laboratory testing.

Ductile Iron Pipe Restraint Guide

Bends				
	11.25	**22.5**	**45**	**90**
Pipe Size	*Restraint Length*			
4"	2'	3'	6'	14'
6"	2'	4'	8'	20'
8"	3'	6'	11'	26'
10"	3'	6'	13'	31'
12"	4'	8'	15'	36'
16"	5’	10’	19’	46’

End Caps	
Pipe Size	*Restraint Length*
4"	25'
6"	35'
8"	46'
10"	55'
12"	65'
16”	83’

Tees				
Pipe Size	*Restraint Length*		*Pipe Size*	*Restraint Length*
4" x 4"	25'		**12" x 4"**	25'
6" x 4"	25'		**12" x 6"**	35'
6" x 6"	35'		**12" x 8"**	46'
8" x 4"	25'		**12" x 10"**	55'
8" x 6"	35'		**12" x 12"**	65’
8" x 8"	46'		**16” x 6”**	35’
10" x 4"	25'		**16” x 8”**	46’
10" x 6"	35'		**16” x 12”**	65’
10" x 8"	46'		**16” x 16”**	83’
10" x 10"	55'			

Reducers	
Pipe Size	*Restraint Length*
6" x 4"	18'
8" x 4"	33'
8" x 6"	19'
10" x 4"	45'
10" x 6"	34'
10" x 8"	19'
12" x 4"	56'
12" x 6"	47'
12" x 8"	35'

Notes:

Restraint lengths are calculated in feet from face of fitting to closest bell or mechanical joint.

All calculations are based on the pipe bedded in a 4" minimum of loose soil backfill, lightly consolidated to top of pipe and then backfilled to a depth of 4.0'.

Also the piping will have a maximum pressure of 150psi.

END OF SECTION

SECTION 05200

CLEANING AND LINING WATER MAINS

SECTION 05200
CLEANING AND LINING WATER MAINS

General Provisions

1.1 DEFINITION OF TERMS

1.1.1 This section pertains to the furnishing of all labor, equipment, tools, and materials and performing all operations in connection with providing the cleaning and cement-mortar lining of cast-iron water pipelines, including excavation, sheeting, shoring, cutting pipe openings, dewatering pipelines and excavations, cleaning and inspecting pipelines, cement lining pipelines, video recorder inspection of cement lining, closing pipe openings, uncovering existing valves, removing existing mainline valves, removing and replacing piping, fittings and valves where obstructions occur, removing inoperative valves, clearing service connections, testing and disinfecting pipelines, backfilling, protection of existing structures, properties, and utilities, and all other appurtenant and related work required to satisfactorily complete the cleaning and cement mortar lining of the existing cast-iron piping, complete and in strict accordance with the specifications and the applicable drawings, and as directed.

1.1.2 All temporary bypass service piping and building services shall be provided, kept in repair, and maintained in such a manner so as to prevent injury to persons or damage to the work or public and private property, and in accordance with the requirements specified in "Section 05800 - TEMPORARY BYPASS PIPING AND SERVICES".

1.1.3 The work included in this section shall be performed in strict accordance with the requirements of AWWA Standard for Cement-Mortar Lining of Water Pipelines In Place - 4 inches (100 mm) & Larger (AWWA C-602), latest editions except as modified or otherwise specified herein. The materials used to create the cement mortar and any admixture must also comply with ANSI/NSF-61.

SECTION 05200
CLEANING AND LINING WATER MAINS

1.2 REFERENCES:

a.	Section 01000	General Requirements
b.	Section 05000	Utility Piping.
c.	Section 05800	Temporary Bypass Piping.
d.	Section 08000	Paving, Surfacing, and Permanent Repairs to Streets and Sidewalks
e.	AWWA C-602	Cement-Mortar Lining
f.	ANSI/NSF-61	Drinking Water System Components - Health Effects

Submittals

2.1 SUBMITTALS

2.1.1 The Contractor shall provide submittals in accordance with Section 13 of "Section 01000 - General Requirements".

2.1.2 The Contractor shall submit to Owner a list of equipment to be used for the cleaning and lining of water mains and appurtenances.

2.1.3 The Contractor shall submit to Owner the method that shall be utilized to disinfect cleaned and lined water mains and appurtenances.

3.1 MORTAR FOR LINING

3.1.1 All cement-mortar for pipe linings shall be composed of Portland cement, sand and water. It shall be the proportion of one part of cement and one to one and one-half parts of screened sand by volume. The exact proportion shall be designed to create the proper consistency to provide a dense, homogenous pipe lining which shall adhere firmly to the pipe interior surfaces.

3.1.2 Portland cement shall meet the requirements of ASTM. Designation: C 150, Type II, with latest amendment.

3.1.3 Sand shall be clean and well graded, having clean, hard, durable, uncoated grains, free from organic matter, clay lumps, shale, soft or flaky particles and other unsound or

deleterious substances. All sand shall be washed, if required, and shall pass a No. 16 mesh sieve with not more than 5 percent in weight passing a No. 100 sieve. Samples of sand to be used shall be furnished to the Owner for test and approval at least 10 days prior to the time when it is to be used. Tests of sand will be made in accordance with the latest ASTM Standard Methods. Test results shall meet the approval of the Owner.

3.1.4 Water shall be clean, free from injurious ingredients and shall be obtained from the Owner's water supply. **A testable backflow prevention device shall be utilized at the location where the Contractor is granted access to the Owner's water supply for construction purposes.**

3.1.5 The mortar shall be well-mixed and the water-cement ratio shall be carefully controlled and kept to a minimum. No mortar which has attained its initial set shall be used for pipe lining.

Equipment

6.1 The Contractor shall be responsible for providing all necessary and required equipment for the excavation and restoration of access pits, for dewatering pipelines, for cleaning pipelines, for cement-mortar lining of pipelines, for inspection and testing of pipelines, for pressure testing and chlorination of pipelines, and for the replacement/installation of fittings, valves, hydrants, and services.

Execution

7.1 PROCEDURE

7.1.1 The Contractor shall perform and complete all work in accordance with the plans and specifications. The Owner shall determine the amount, quality, acceptability, and fitness of all parts of the work completed. The Contractor shall perform all work in a workmanlike manner, with due diligence, and in a continuous and uninterrupted manner.

7.1.2 Lead service replacements must be installed on chlorinated and pressurized mains. To prevent undetected leaks, contractors shall not complete service replacements on dry mains.

7.1.3 All existing services shall be blown back after cleaning to remove tubercules; and again following lining to remove cement mortar deposited during the lining operation. Blow back hoses shall be installed in each building during the temporary bypass connection.

The use of water for blow backs will not be permitted.

7.2 ACCESS PITS FOR CLEANING AND LINING

7.2.1 The Contractor shall open the water main at each end of the section to be cleaned and lined, at all main line valves, bends, fittings, and obstructions shown on the Contract Drawings or identified by the Owner, and at other locations to install new valves or relocate existing valves, and as necessary to permit satisfactory cleaning and lining. Additional openings may be required due to obstructions which prevent the passage of cleaning and lining equipment; payment for the removal of obstructions shall be made as defined in Section 7.5 - "Obstructions".

7.2.2 Prior to construction, a plan showing all proposed access pit locations shall be submitted to the Owner for review and approval.

7.2.3 Openings in the pipes shall be made by guillotine saw cuts, with an approved power-operated pipe cutter, removing existing couplings or other approved methods for cutting the pipe square and true by hand or machine. Any material not reused shall become the property of the Contractor and shall be disposed of by the Contractor to a site approved by the Owner.

7.2.4 At openings adjacent to sections under pressure or in service, the Contractor shall install adequate blocking to prevent movement during the time the pipe is open. The Contractor shall be responsible for the design and adequacy of all blocking required and the design of the blocking shall be submitted to the Owner for review. The Contractor shall include in his unit prices, the cost of all access openings, especially in locations at or adjacent to valves and water main intersections; hand cleaning and lining; and bracing of existing or replaced valves as may be required to facilitate cleaning and lining of all portions of a main to the limits shown on the Plans. Additional new valves shall be added to the pipeline as shown on the Contract Drawings and elsewhere as required by the Owner.

7.3 DEWATERING PIPELINES

7.3.1 The Contractor shall dewater all pipelines prior to the start of cleaning, lining and such other work; drain all low spots; plug or close all services; close valves or otherwise isolate the work area. The Contractor shall be responsible for taking all necessary and special precautions to prevent the possibility of any water entering the sections where men are working.

7.3.2 The Contractor shall insert bulkheads at the terminals of dewatered sections. Water shall be disposed of in a manner and to a location meeting the approval of the Owner.

7.3.3 The OWNER makes **no** warranty as to the completeness of water shutdowns from open pipes during the work. It is the contractor's responsibility to provide an adequate number and proper type of pumps to dewater the excavations to prosecute the work. There will be **no** extra payments to the contractor for delays as a result of inadequate dewatering.

7.4 CLEANING OF WATER MAINS

7.4.1 Prior to proceeding with the cleaning of pipelines, the Owner shall provide all known documentation that identifies the existence and locations of any conditions which might prevent free passage of cleaning or lining equipment. OWNER makes no guarantee to the completeness or accuracy of record documents. Conditions which constitute obstructions as described herein under Section 7.5 - "Obstructions" shall be remedied by the Contractor and the work will be paid for in the manner specified as unforeseen additional work utilizing Bid Schedule rates. All other conditions encountered, which in the opinion of the Owner, do not constitute obstructions within the scope of the criteria specified herein under Section 7.5 - "Obstructions" shall be remedied by the Contractor in an approved manner to provide conditions satisfactory for the performance of the work of the contract, at no additional expense to the Owner.

7.4.2 All rust, tubercles, deposits, loose materials, and all other foreign materials which might affect adversely the bonding of the mortar to the pipe surfaces shall be removed from the interior of the pipelines by use of the dry dragline (or "drag") method, except for locations where hand cleaning is warranted or is the only feasible method. The Contractor shall provide the necessary measures to uncover all mainline valves and either remove all operating parts of valves or entirely remove existing mainline valves, as shown on the Contract Drawings and as specified herein under Section 7.6 - "CEMENT-MORTAR LINING OF PIPELINES", to prevent damages to valves and similar water line appurtenances. The Contractor shall pass the machine through the mains as many times as may be necessary and shall employ such other supplementary means as may be required to clean the pipe surfaces and to remove all foreign matter, rust and dirt from the pipe surfaces. It shall be the responsibility of the Contractor to employ approved methods and to do all work necessary to obtain clean pipe surfaces and to insure the satisfactory bonding of the cement-mortar lining to the pipe surfaces.

7.4.3 The Contractor shall dispose of cleaning water and the residue from cleaning the mains at a site and in a manner as approved by governing City and State agencies. All residue shall become the property of the Contractor and lifted from the trench or access pit by vacuum truck and removed from the site, not disposed of in the trench nor access pit, nor reintroduced in any of the Owner's projects. The Contractor shall examine the location where cuts are to be made and make adequate preparations to avoid the

flooding of streets and adjacent structures or private property. Precaution shall be taken to prevent cleaning wastes from being deposited in drains, sewers or waterways by use of sandbags stacked to trap the cleaning residue. All wastewater resulting from the cleaning operations shall be disposed of at locations and in a manner meeting the Owner's approval. Immediately following cleaning, streets and affected areas shall be hosed and swept clean of tuberculation residue.

7.4.4 The Contractor shall take precautions to prevent obstruction of any lateral, hydrant or service connection by deposit of cleaning debris. Branch connections and service connections shall be back flushed before closure of pipe access openings to remove all sediment, loose and foreign materials which have entered the branch lines during cleaning operations. Precautionary measures shall be provided to protect valves and other appurtenances against the entrance of dirt, sediment and other foreign materials and any other damage. All damage to valves, pipes or other pipeline appurtenances and fittings as a result of the Contractor's operations shall be made good or replaced by the Contractor in a manner satisfactory to the Owner, at no additional expense to the Owner. Defective parts not the result of the Contractor's operations will be repaired at the discretion of the Owner, and if so directed by the Owner, the defects remedied by the Contractor will be paid for in the manner specified as unforeseen additional work utilizing Bid Schedule rates.

7.5 OBSTRUCTIONS

7.5.1 Horizontal or vertical pipeline bends, or other physical obstructions within the pipelines, which will not permit the passage of pipe cleaning or cement-mortar-lining devices, and which are not shown on the drawings or other plans made available to the Contractor; or are not made known to the Contractor prior to the pipe cleaning operations at the respective section; or are not obviously implied by the layout on the drawings, will be considered as "OBSTRUCTIONS" for purposes of payment. When an obstruction is encountered in the pipe cleaning operations which will not permit the passage of pipe cleaning and cement-mortar lining equipment, the Contractor shall provide all work necessary to permit the satisfactory passage of the equipment, as directed by the Owner, and said work will be paid for in the manner specified as unforeseen additional work utilizing Bid Schedule rates. After pipeline cleaning, and before lining operations, the Contractor shall run a "proover" through the pipeline to determine if there are any obstructions that would not permit the passage of the cement-mortar lining equipment.

7.6 CEMENT-MORTAR LINING OF PIPELINES

7.6.1 Cement-mortar lining of pipelines shall not be started until all cleaning operations have been satisfactorily completed and approved by the Owner.

7.6.2 The cement-mortar lining in the pipelines shall be continuous, dense, smooth and without variations in quality, and free from noticeable changes in thickness. The cement-mortar- lining of the pipelines shall be provided in strict accordance with the requirements of the American Water Works Association Standard Specification for "Cement-Mortar Lining of Water Pipelines in Place". Designation: AWWA C 602, with latest amendments, except as modified herein, and in accordance with additional requirements specified herein.

7.6.3 The cement-mortar lining thickness for the various diameter pipelines shall be in accordance with the following table, with an allowable plus tolerance of 1/8 inch. No minus tolerances in the cement-mortar lining thickness specified will be permitted.

Nominal Pipe Diameter (inches)	Lining Thickness (inches)
4 - 10	1/8
12 - 36	3/16
Greater than 36	1/4

7.6.4 PLACING CEMENT-MORTAR PIPE LINING

7.6.4.1 Immediately prior to running the lining machine through the pipeline, all sand, water loose material and other foreign material that has accumulated in the pipelines shall be satisfactorily removed. All preparatory work shall be provided by the Contractor in a manner that shall insure the proper and satisfactory placement of the cement-mortar pipe lining.

7.6.4.2 The cement-mortar pipe lining shall consist of a one course application of a premixed cement-mortar which shall be continuously placed by a machine projecting the mortar against the wall of the pipe by centrifugal force, without injurious rebound, and with sufficient velocity to cause the mortar to be densely packed and to satisfactorily adhere in place. The machine used for cement-mortar lining all pipelines shall be provided with an attachment for mechanically troweling or drag troweling the mortar so as to produce a smooth surface finish, and shall travel ahead of the lining so that the freshly placed and troweled mortar will not be touched until it has set; the design of the trowel attachment shall be such as to permit operation in pipes which may be found out of round, and produce a smooth surface without spiral shoulders. The finished surface shall be smooth and shall not have a sand finish.

7.6.4.3 Mortar which does not provide a dense, homogenous lining satisfactorily adhered to the pipe surfaces, mortar lining containing sand pockets, voids, over-sanded and cracked areas, areas of unsatisfactory surface finish and such other defective areas

and materials shall be removed from the pipe wall. These areas shall be repaired by hand application or other approved method to the full required thickness of the mortar lining and as approved. All spatter and loose material shall be removed from the pipelines.

7.6.4.4 Faulty sections of pipe lining such as sections of pipe lining which fail, or show evidence of failure, or show unusual or undue irregularity, or which will require an excessive amount of patching shall be removed by the Contractor before the lining has reached its initial set to the extent directed by the Owner. The pipe shall then be re-cleaned and the lining shall be replaced by the Contractor to conform to the requirements specified herein, and as approved. Defective lining rejected after initial set shall be repaired by the most practical method as determined by the Owner, in consultation with the contractor.

7.6.5 CURING OF CEMENT-MORTAR LINING

7.6.5.1 Immediately upon completion of the cement-mortar lining of pipeline between pipe openings or upon the completion of a day's run of the machine, the section of the pipeline shall be closed at each end and maintained in a moist condition by installing a "Plug" or "End Cap". As soon as practicable after placing the cement mortar lining, water shall be introduced into the mortar- lined section between the closed ends of pipe in order to create a moist atmosphere and keep the cement-mortar lining damp, but not under pressure, until the mortar lining has been in place not less than 48 hours. The Contractor shall be responsible for the proper curing of the cement mortar linings.

7.6.6 HAND-PLACED MORTAR WORK

7.6.6.1 Cement-mortar lining of sharp bends, specials, areas adjacent to valves or other areas where machine placing is impracticable, and correcting defective areas shall be done by hand. Hand-placed mortar shall have uniformly smooth finished surfaces and smooth transitions adjacent to machine-placed areas. Cement-mortar shall be as specified herein for machine lining. Prior to the placing of hand mortar work, all areas to be lined shall be thoroughly cleaned in an approved manner with all loose and foreign materials removed, and if required, surfaces shall be dampened before placing the mortar. Steel trowels shall be used for finishing where practicable. Hand mortar work shall be completed within 24 hours after machine application in that particular section of pipeline has been completed. Machine application of mortar lining shall be slowed down, or stopped if necessary, to assure hand mortar work is being placed in accordance with the requirements specified or directed.

7.6.7 PROTECTION OF LINING

7.6.7.1 The Contractor shall be solely responsible for taking every precaution necessary to prevent injury to the pipe lining. All damage to pipe linings shall be satisfactorily repaired, or damaged portions removed and replaced by the Contractor to the satisfaction of the Owner, at no additional expense to the Owner.

7.7 INSPECTION AND TESTING

7.7.1 The Contractor shall make test cylinders of the cement-mortar used for pipe linings at such times as directed by the Owner. The making, curing, handling and testing of cement-mortar shall be in accordance with ASTM Specifications and as approved; the making, handling and curing of mortar test cylinders shall be performed by the Contractor; the testing of mortar test cylinders will be made by the Owner.

7.7.2 The machine for placing the cement-mortar lining shall be so operated and controlled as to produce pipe linings conforming to the requirements specified herein. The operation and controls for the equipment shall be constantly checked while the machine is in operation.

7.7.3 Television Inspection: The Contractor shall utilize a professional video recording service specializing in Closed Circuit Television (CCTV) Inspection of water mains to visually inspect the condition of the cleaned and lined water mains with a picture quality acceptable to OWNER. The Contractor shall re-inspect if the inspection is determined to be unsatisfactory. Lighting for television inspection shall be provided by a camera mounted lamp capable of lighting the entire inside circumference of the pipe. The camera shall be moved through the line in either direction at a uniform rate not to exceed three feet (3) per second and stopping when necessary to insure proper documentation of the lined main condition. Equipment used to move the camera through the lined water main shall not interfere with the camera view.

7.7.3.1 Camera: The television camera shall be specifically designed and constructed for water main television inspection. Cameras and pertinent inspection equipment shall be from potable water inspections only; the equipment shall not have been used in either drain or sewer inspection. The camera shall be capable of operating in 100% humidity conditions and of viewing the entire inside circumference of the pipe. The camera shall be self- propelled or mounted on adjustable skids. The camera view shall be transmitted to an above grade minimum 17-inch monitor.

7.7.3.2 Video Record: The Contractor shall submit 2 copies of the video record in DVD format to OWNER for review. The video record shall have both audio and video tracks describing and depicting pertinent features viewed during the inspection. The video track shall include the following; street, limits of cleaning and lining (i.e. start and end point), date and current distance along reach complete with descriptive printed labels. The audio track shall include the date and time of inspection, limits of cleaning and lining (i.e. start and end point), verbal description of pipe size and type, and description

of any defects or significant features. At no additional cost, OWNER shall reserve the right to require repairs to any defects noted during the television inspection before acceptance. The DVD video of the pipeline shall be submitted to the Owner for review prior to closure of the pipe access openings for that pipeline. No separate payment will be made for video recorder inspection, but the costs thereof shall be included in the work under this section of the Specifications.

7.7.4 The thickness of the cement-mortar lining for various pipe diameters shall be checked at each entrance/exit pit by the Owner and the Contractor and at other inspection points as directed by the Owner. If the cement-mortar lining is found to be defective at any random inspection point, the Owner may require the Contractor to provide additional inspection pits to determine the extent of the defective lining and the Contractor shall repair the cement-mortar lining found to be defective at no additional expense to the Owner. The Contractor shall make the necessary excavations, at locations as directed, cut out a three foot section of cleaned and cement-lined pipe for visual inspection, patch the lining as required at pipe cuts, reinsert the section using approved pipe couplings as specified in Section 7.9 - "REPLACING WATER MAIN PIPING" below, backfill excavations, place gravel base, and restore pavement. No separate payment will be made for inspection pit and related work.

7.8 GUARANTEE OF CEMENT - MORTAR LINING

7.8.1 The Contractor shall guarantee materials and workmanship furnished under this contract against deterioration and failure for a period of one year after final acceptance of all the work under this contract. Any portion of the cement-mortar lining found to be deteriorated or to have failed shall be made good by the Contractor in a satisfactory manner by patching or by removal and replacement of the cement-mortar lining, as required by the Owner, to provide a sound, durable cement-mortar lining. Repairs and/or replacements shall be made in accordance with AWWA Standard C602 (latest edition) and with the requirements specified herein, including removal of defective lining, cleaning the pipe, cutting and repairing or replacing access openings and all other incidental work. Repairs or replacements of defective cement-mortar lining and incidental work shall be provided in a satisfactory manner by the Contractor, at no additional expense to the Owner.

7.9 REPLACING WATER MAIN PIPING

7.9.1 After all tests have been satisfactorily completed (including a successful disinfection), and the cement-mortar lining has been approved by the Owner, the access openings in the water main shall be closed. Unless otherwise directed, the sections removed from the pipelines shall be disposed of and replaced with new Ductile Iron pipe in the completed water main. If so directed by the Owner, the Contractor shall reinsert

sections of hand cleaned and lined pipe into the access openings in lieu of replacing the removed sections with new D.I. pipe. Hand cleaning and lining sections of pipe shall be provided in accordance with "Section 05200 - Cleaning and Lining Water Mains". At those locations where existing mainline valves have been removed and/or relocated elsewhere, the Contractor shall provide a new section of D.I. pipe for the closure. New sections of D.I. pipe shall be installed in accordance with "Section 05000 - Utility Piping".

7.10 LEAKAGE

7.10.1 If any leaks occur in the water mains at locations where sections have been removed for access and later replaced by the contractor, or if leaks occur at any other locations which are directly attributable to the operations of the Contractor in the cleaning and lining of mains, the Contractor shall uncover and satisfactorily repair said leaks at no additional expense to the Owner for a period of one year after final acceptance of the work under this contract.

Field Quality Control

8.1 PROTECTION

8.1.1 Existing pipelines, utilities and structures, as well as work installed under this contract, shall be protected by the Contractor from damage during construction, backfilling and other contract operations; and if damaged, shall be satisfactorily replaced or repaired by the Contractor, at no additional expense to the Owner.

8.1.2 At locations where the existing pipelines are cut and open and sections temporarily removed, the Contractor shall keep the open ends covered and plugged at all times, utilizing approved methods as directed by the Owner, to prevent any run-off or foreign matter from entering the pipeline until such time as the existing pipeline has been permanently closed. No flexible fabrics, plastics or tape will be acceptable as bulkheads or caps.

8.1.3 The Contractor shall be responsible for taking and providing all necessary and required precautionary measures at all times during the cleaning and lining operations and the installation and removal of the temporary bypass service piping and building service connections, to prevent any contamination of the OWNER distribution system, and for the protection of public health and safety.

8.1.4 The Contractor shall be responsible for providing labor, materials, and equipment on a twenty-four (24) hour standby status, at no additional cost to the Owner, to

maintain continuous service to all OWNER customers.

8.2 VISUAL LEAKAGE INSPECTIONS

8.2.1 Upon activation of the newly lined water mains, the Contractor and the Owner will visually inspect all new piping, valve and coupling connections within the access openings (cleaning and lining pits) for leakage. Whereupon any evident leakage is observed, the Contractor will repair, remove and/or replace any defective component at no additional expense to the Owner, and again perform a visual inspection to confirm that the corrective work has eliminated the leakage.

8.3 DISINFECTION

8.3.1 All existing water mains, new water main piping, fittings and valves shall be disinfected just before placing the newly lined water mains into service. Disinfection shall be done as part of the work included under this section of the specifications, and in accordance with the disinfection requirements specified under Section 8.6 of "Section 05000 – Utility Piping". No separate payment will be made for such work, but the cost thereof shall be deemed to be included in the work required herein.

END OF SECTION

SECTION 05600

FLOW STOPPING DEVICES

General Provisions

1.1 DEFINITION OF TERMS

1.1.1 This section pertains to all workmanship, materials, equipment, and incidentals required for providing and installing single and double flow stopping mechanical devices (ie. single and double line stops). If the Owner determines that a valve and/or a section of an existing water main cannot be shut down or taken out of service, the Contractor will be directed to install a line stop which will temporarily plug the pressurized pipe without disrupting pressure or service upstream of the line stop.

1.2 REFERENCES:

a.	ANSI B16.5	Dimensional Standards for Steel Pipe Flanges and Flanged Fittings
b.	ASTM A36	Standard Spec. for Carbon Structural Steel
c.	ASTM A105	Standard Spec. for Forgings, Carbon Steel & Piping Components
d.	ASTM A181	Stand. Spec. for Forgings, Carbon Steel & General-Purpose Piping
e.	ASTM A234	Stand. Spec. for Piping Fittings of Wrought Carbon Steel and Alloy Steel for Moderate Elevated Temperatures
f.	ASTM A385	Standard Specification for Pressure Vessel Plates, Carbon Steel, Low-and Intermediate-Tensile Strength – Grade C
g.	AWWA C-207	Steel Pipe Flanges for Waterworks Service - Sizes 4 inch through 144 inch

Submittals

2.1 SUBMITTALS

2.1.1 The Contractor shall provide submittals in accordance with Section 13 of "Section 01000 - General Requirements".

2.1.2 The Contractor shall submit, for Owner's approval, manufacturer's drawings, which fully and distinctly illustrate and describe the line stop fittings proposed to be furnished. In addition, all catalog cuts pertaining to the work shall be submitted.

2.1.3 The Contractor shall submit to Owner a list of equipment to be used for the supply and installation of line stops.

2.1.4 The Contractor shall submit to Owner as-built shop drawings of each line stop throughout the course of the work.

2.1.5 The Contractor shall submit to Owner the method that shall be utilized for pressure and leakage testing of the mains after installation of line stops. The Contractor shall submit to Owner the method that shall be utilized to disinfect the mains after installation of line stops. Prior to the performance of any subcontract work, the subcontractor must be approved by the Owner. The Contractor is responsible for any and all work performed by their Subcontractors.

Quality Assurance

3.1 QUALITY ASSURANCE

3.1.1 To make certain that the entire operation shall be accomplished without interruption of service or flow, the installation of the line stop, associated fittings and support/reaction blocking shall be accomplished by personnel skilled and experienced in the installation procedures specific to line stops.

3.1.2 Reference Section 8, "Quality Assurance" of "Section 01000 - General Requirements".

Materials

4.1 SINGLE & DOUBLE LINE STOP FITTINGS AND ACCESSORIES, CAST IRON PIPE

4.1.1 Line stopping mechanical devices shall be manufactured by Hydra-Stop, Inc., or equal as approved by the Owner.

4.1.2 Fitting(s) shall be full encirclement, pressure retention type split tee. It shall consist of two steel weldments; 1) an upper line stop flange saddle plate and 2) a lower saddle plate. These two saddle plates shall be contiguous.

4.1.3 Upper Saddle Plate: The interior of the saddle plate, adjacent to and concentric with the O.D. of the nozzle, shall be grooved to retain a gasket which shall seal the saddle plate to the exterior of the cast iron main. This gasket shall constitute the only seal between the main and the fitting.

4.1.4 Line Stop Flange: The outlet of each fitting shall be machined from 150 lb. forged steel flange (ASTM A181 or A105) or from pressure vessel quality steel plate (ASTM A285, Grade C); flat faced and drilled per ANSI B16.5. Suitable independently

operated locking devices shall be provided in the periphery of the flange to secure the completion plug.

4.1.5 Line Stop Nozzle: The nozzle, which lies between the saddle and the flange shall be fabricated from steel pipe (ASTM A234). After welding and stress relief, the nozzle shall be accurately bored as follows to accommodate the line stop plugging head:

a. Machine an internal circular shoulder to seal against the circumferential gasket carried on the plugging head.

4.1.6 Completion Plug: The completion plug shall be machined from a stress relieved carbon steel weldment. It shall contain two (2) circumferential grooves; 1) one to receive the locking devices from the line stop flange, and 2) the second to contain a compressible "O" ring to seal pressure tight against the bore of the flange.

4.1.7 Blind Flange: Each line stop fitting shall be closed with a blind flange. Facing and drilling of the blind flange shall be compatible with that of the line stop flange. Minimum blind flange thickness shall be that of AWWA specification 207, class D.

4.1.8 Saddle Alignment Marking: Each saddle half shall be matched and marked with serial numbers, to insure proper alignment in the field.

4.1.9 Fasteners: All bolts, studs, and nuts used on the line stop and drain/equalization fittings shall be of the heavy series.

4.1.10 General: The Manufacturer shall exercise extreme care to insure that weldments are of adequate strength, properly shaped, securely reinforced, and free from distortion that could stress the cast iron main during installation, pressure tapping, or line stopping operations. All steel shall meet the requirements of ASTM A36, as a minimum. All weldments shall be braced and stress relieved.

4.1.11 Gaskets: Shall be molded from elastomer compounds that resist compression setting and are compatible with water in the 32 to 140 degree Fahrenheit temperature range.

4.1.12 Upper Line Stop Flange Saddle: Shall consist of a saddle plate, a line stop flange, and a line stop nozzle.

a. Saddle plate shall be of a minimum of .375" in thickness. It shall be shaped to be concentric to the outside of the cast iron main. The smallest I.D. of the saddle and its interior rings shall exceed the O.D. of the main by a minimum of .250" to allow for ovality of the main.

b. A line stop nozzle of .375" minimum wall thickness shall be securely welded to the saddle plate.

c. The line stop flange shall be securely welded to the nozzle. After welding, the assembly shall be braced, stress relieved, and bored to receive the completion plug and the circumferential gasket of the line stop machine plugging head.

d. Bolts and nuts, except where otherwise indicated, shall be heavy unfinished head bolts and nuts Grade B, low-carbon steel or equal. Bolt studs and nuts shall be of the same quality as machine bolts.

e. Lower Saddle Plate: Shall be of a minimum .375" thickness and shall be shaped to be concentric to the outside of the cast iron main. Gusseted bolting brackets shall match upper half.

f. Coating: After fitting has been stress relieved and machined, the exterior and un-machined interior surfaces shall be sandblasted and coated with coal tar epoxy to a final minimum cured thickness of .020".

g. The Contractor shall use proper and suitable tools for safe and convenient handling of line stop assemblies.

h. The Contractor shall take great care to prevent damage to protective coatings. Minor damage to exterior coating may be patched with asphaltum. Materials with excessive damaged to exterior coatings must be removed and replaced.

i. The Contractor shall carefully examine all fittings and appurtenances for defects. No material is to be installed which is known to be defective. The Contractor shall replace, at his own expense, any defective material incorporated into the work.

4.2 MATERIALS

4.2.1 All materials used to incorporate the line stop in the water system shall conform to current American Water Works Association (A.W.W.A.) and OWNER specifications.

4.3 SUBSTITUTIONS

4.3.1 The contract is based on the standards of quality established by the Contract Documents. Substitutions will be considered as specified at the time of bid submittal or when requested by the Contractor during the progress of the work.

4.3.2 Specific materials, dimensions and tolerances are specified as a reference standard. Deviations from these may be allowed providing the Contractor can clearly demonstrate that his proposed substitution meets the requirements of the specifications and is equal in quality, performance, reliability, durability, etc. to the Owner's satisfaction. The contractor shall, submit for Owner approval any materials necessary to substantiate his

request.

4.3.3 Substitute materials, equipment, methods, etc. shall not be incorporated into the work until approved in writing by the owner.

4.3.4 Where the phrase "or equal" or "equal as approved by the Owner" appear in the specification the Contractor shall provide a submittal to the Owner for approval to substantiate that the proposed item meets specification requirements. Do not assume that an item will be approved as equal unless written approval is received from the Owner.

4.3.5 The decision of the Owner will be final on all substitutions and "equals".

Equipment

5.1 LINE STOP MACHINERY

5.1.1 Line stop equipment shall consist of a cylindrical plugging head that contains a flat, expandable elastomer sealing element or equal as approved by the Owner.

5.1.2 Sealing Element: The element shall be monolithically molded from a suitable polyurethane compound. The element shall be flat in a plane perpendicular to the flow in the main. Minimum thickness of the element shall be 1.5". The bottom of the element shall be semicircular to conform to the bore of the main.

5.1.3 Plugging Head: The diameter of the cylindrical plugging head shall be slightly smaller than the bore of the line stop nozzle. The plugging head gasket shall seal against the sealing element to prevent bypass flow around the line stop.

5.1.4 Deposits in Bore of Main: The semi-cylindrical bottom of the plugging head shall be designed to break and dislodge tuberculation and other deposits in the bore of the main which might interfere with a satisfactory line stop.

Execution

6.1 PROCEDURE

6.1.1 The Contractor shall perform and complete all work in accordance with the plans and specifications. The Owner shall determine the amount, quality, acceptability, and fitness of all parts of the work completed. The Contractor shall perform all work in a workmanlike manner, with due diligence, and in a continuous and uninterrupted manner.

6.1.2 Prior to ordering the material:

a. The Contractor shall excavate, dewater, expose, and clean the exterior of the main at the location of the proposed line stop. If the main is heavily corroded, or if utilities will interfere with fittings, support/reaction blocking, or equipment, the Owner shall designate a new location up or downstream to structurally sound pipe.
b. The Contractor shall caliper O.D. of main to determine ovality, verify wall thickness and interior condition.
c. The Contractor shall backfill and restore area as necessary.

6.1.3 Once Contractor has received the proper fittings and is ready to perform the line stop operation, the Contractor shall re-excavate and dewater area.

6.1.4 Selected Contractor shall provide and install approved line stops, associated fittings and support/reaction blocking around the main as follows:

a. Pressure test per Owner's specifications.
b. Install concrete support and reaction blocking.
c. Allow to cure per Owner's specifications.
d. Mount temporary tapping valve(s) to line stop fitting(s) and drain nozzle(s).
e. Mount line stop machine; open temporary valve; insert line stop plugging head into main.
f. Test for shutdown at drain nozzle.

6.1.5 Upon a successful shutdown of the main, the Contractor shall proceed with the repair activities (valve replacement, water main repair, etc.) for which the shutdown was required.

6.2 INSTALLATION

6.2.2 Prior to the installation of the line stop the Contractor shall power wire brush and grind the exterior of the main to remove any debris, corrosion deposits, or other surface irregularities that might interfere with proper seating and sealing of the line stop fitting around the main. Under no circumstances shall the Contractor attempt to force, reshape, or bend saddle studs while line stop fitting is assembled around the main.

a. Any retrofitting shall be accomplished with the fitting removed from the main.
b. Any damage to fittings, accessories, or main shall be repaired at Contractor's expense.

6.2.3 Thrust and Support Blocking: Prior to mounting temporary tapping valve and pressure tapping machinery, the Contractor shall install concrete thrust and support blocking as designed and certified by a registered Professional Engineer. Blocking shall reach a minimum cure strength specified by the OWNER before any valves or machinery shall

be mounted onto the line stop fitting.

6.2.4 Assembly of the line stop fitting:

a. The entire periphery of the cast iron main shall be power ground for the entire length of the line stop fitting.
b. Upper and lower saddle halves shall be drawn together by bolt assemblies in the horizontal position.

6.2.5 Line stops and appurtenances shall be swabbed with a chlorine solution, by the Contractor, in accordance with American Water Works Association (A.W.W.A.) specifications prior to assembly. **Chlorine used for the disinfection of line stops and appurtenances shall be NSF 60 certified for potable water use.**

6.2.6 Completion: Final closure shall be accomplished by:

a. Insertion of a completion plug.
b. Test of completion plug sealing shall be accomplished through bleed-off in machine housing.
c. Temporary valve shall be removed and installation of blind flange shall be completed.

6.2.7 Upon completion, the Contractor shall test the plug sealing, remove the temporary valve, cap and coat the entire assembly with coal tar epoxy to a final minimum cured thickness of 0.02", and ensure that the entire assembly is completely watertight under the full normal working pressure in the main.

6.2.8 Upon completing the repair activities, the Contractor shall remove the temporary line stop valve as follows:

a. Retract line stop plugging head(s), and close temporary valves.
b. Remove line stop machine.
c. Install completion machine; open valve.
d. Insert completion plug into nozzle of line stop fitting.
e. Remove completion machine and temporary valve.
f. Repeat items a through d at other line stop fitting.
g. Install blind flange(s) onto nozzle of line stop fitting(s) and onto drain fitting(s).
h. Cap and coat the entire assembly(s) with coal tar epoxy to final minimum cured thickness of 0.02".
i. The Contractor shall backfill and restore as necessary.

Field Quality Control

7.1 FIELD QUALITY CONTROL

7.1.1 Reference Article 8, “Field Quality Control” of “Section 05000, Utility Piping”.

END OF SECTION

SECTION 05800

TEMPORARY BYPASS PIPING AND SERVICES

SECTION 05800
TEMPORARY BYPASS PIPING AND SERVICES

General Provisions

1.1 DEFINITION OF TERMS

1.1.1 This section pertains to the furnishing of all labor, equipment, tools, appurtenances and materials, and performing all operations in connection with providing, maintaining, repairing, and removing all temporary bypass piping and service connections, as specified. Temporary bypass piping shall be used on streets where existing water mains are to be replaced or rehabilitated, or otherwise taken out of service to facilitate new work. The work also includes temporary building service piping and connections, valves, fittings, piping, hydrants, connections to other piping and facilities, disinfection of temporary bypass line and service piping, excavations and backfills, temporary asphalt restoration, replacement of all disturbed existing work, crossings over traveled ways, and all other incidental and appurtenant work required to satisfactorily provide temporary water service to OWNER consumers for domestic and fire protection uses, complete, in strict accordance with the Specifications and Drawings, and as directed. Where fire hydrants are bypassed, a minimum 4-inch bypass line shall be used and a temporary fire hydrant shall have a 4-inch steamer outlet, complete with a control valve, and a hose fitting and cap.

1.1.2 All temporary bypass piping and building service connections shall be provided in such a manner that all public health and safety requirements of the State and City shall be strictly adhered to at all times. It shall be the responsibility of the Contractor to familiarize himself with all State and City public health and safety requirements, as they may affect the work under this contract. All temporary bypass service piping and building services shall be provided, kept in repair, and maintained in such a manner so as to prevent injury to persons or damage to the work or public and private property.

1.2 REFERENCES:

a.	Special Conditions 05000	Utility Piping
b.	Special Conditions 08000	Paving, Surfacing, and Permanent Repairs to Streets and Sidewalks

SECTION 05800
TEMPORARY BYPASS PIPING AND SERVICES

Submittals

2.1 SUBMITTALS

2.1.1 The Contractor shall provide submittals in accordance with Section 13 of the General Requirements.

2.1.2 Prior to installation, the Contractor shall prepare a plan (2 copies) showing all proposed bypass piping locations and shall submit this plan to the Owner for review. Plans shall clearly show locations of feeds, sample points, and temporary hydrants. Bleeder locations shall be determined in the field and verified by the inspector. Upon receipt of written approval by the OWNER, the Contractor will proceed to install the temporary bypass piping and services, as outlined in this section. Should it be determined at any time during the construction, that the proposed bypass system piping cannot be installed as shown on the temporary bypass piping plan or in alternate locations approved by the Owner, without extensive disruption of service of the existing water system, the Contractor will immediately notify the Owner. The Owner shall have the final approval on the layout and pipe sizes of the proposed bypass piping system

2.1.3 If the existing hydrants that Contractor proposes for bypass piping feed hydrants are not breakaway type or are found to be operationally deficient, Contractor shall replace said hydrants at the unit cost listed in the Bid Schedule (Section 00410-Bid-Form, Item Nos. 12a and 12b) prior to installation of the bypass piping system. OWNER reserves the right to review the Contractor's proposed hydrants for bypass piping and require the Contractor to replace any existing hydrant (including those outside the limits of work) at the unit cost listed in the Bid Schedule (Section 00410-Bid-Form, Item Nos. 12a and 12b) prior to installation of the bypass piping system. The Contractor shall identify all feed hydrants on submitted bypass piping plans as stipulated in 2.1.2 above for OWNER's review and approval.

2.1.4 The Contractor shall submit for OWNER's review and approval a plan detailing all work to be performed and a list of materials including, but not limited to, all pipes, fittings and appurtenances to be installed as part of the work. In addition, all catalog cuts pertaining to the work shall be submitted. All documentation shall be submitted prior to commencement of any construction activities.

2.1.5 The Contractor shall submit to OWNER a list of equipment to be used for the installation and removal of temporary by-pass piping and appurtenances.

2.1.6 The Contractor shall submit to OWNER the method that shall be utilized to disinfect temporary by-pass piping and appurtenances.

2.1.7 A Subcontractor must be approved by the OWNER before any subcontract work is performed. The Contractor is responsible for any and all work performed by their Subcontractors.

Materials

5.1 HANDLING MATERIALS

5.1.1 The Contractor shall use proper and suitable tools for safe and convenient handling of all temporary by-pass piping and appurtenances.

5.1.2 All piping utilized for the main line temporary by-pass shall be fusion welded, high density polyethylene (HDPE) piping. Temporary service lines must be NSF 61 certified and shall be a high purity street to home potable water hose with a PVC tube and blue PVC compound cover, as required by RIDOH. All pipe and appurtenances utilized in providing temporary bypass service shall be adequate to withstand at least 1-1/2 times the normal water working pressures and all other conditions of use. The piping and other materials shall provide adequate water tightness. All bypass pipe shall be new and rated for potable use, or have been used previously for potable water use applications only. Temporary hydrants shall meet the approval of the OWNER prior to installation.

Execution

7.1 INSTALLATION

7.1.1 The Contractor shall perform and complete all work in accordance with the plans and specifications. The OWNER shall determine the amount, quality, acceptability, and fitness of all parts of the work completed. The Contractor shall perform all work in a workmanlike manner, with due diligence, and in a continuous and uninterrupted manner.

7.1.2 All contract water main and appurtenant work shall be generally scheduled for completion so as to allow for the removal of all temporary bypass piping and associated services no later than November 15th. Weather permitting, OWNER will give consideration to the approval of allowing active bypass piping to remain in-place beyond this date in order to complete work which may have been delayed for unforeseen reasons.

7.1.3 Bypass piping and services shall not compromise ADA compliance of sidewalks, ramps, and other ADA compliant features.

SECTION 05800
TEMPORARY BYPASS PIPING AND SERVICES

7.2 TEMPORARY BYPASS PIPING AND SERVICES

7.2.1 The Contractor shall provide temporary bypass piping and services, including isolation and shut-off valves, as required to provide adequate fire protection and serve all OWNER customers serviced by the section of water main that is out of service during the performance of the work under this contract. The size of the bypass mainline piping to serve OWNER customers shall be a minimum of 2-inches in diameter. Additional mainline bypass control valves must be installed at each intersection, on bypass piping after every ten (10) service connections or not more than 1,000 feet between valves. The minimum diameter of bypass service pipe for adequate fire protection shall be 4-inches.

7.2.1.1 6-inch bypass piping may be warranted in select areas to support a higher fire service supply demand for existing commercial facilities, or for multiple fire hydrants, as directed by the OWNER. 6-inch bypass piping shall be utilized where two (2) or more hydrants are located within the bypass system, unless a 4-inch bypass system has multiple feeder (supply) hydrants, or direct system connections. The Contractor shall always utilize 6-inch bypass piping for bypass systems that serve facilities with existing 6-inch fire services.

7.2.1.2 Dead-end bypass lines shall be provided with valves and piping for blow-offs and bleeding. Check valves shall be installed at the end of the bleeder hoses. The Contractor shall provide temporary building service connections to every building served by the section of water main taken out of service. Temporary building service connections shall extend from the bypass pipe with a control valve; terminate at the connection to the building plumbing; and shall be of adequate size to satisfactorily provide adequate water to the building being serviced.

7.2.2 In general, all temporary piping and services shall be provided in such a manner as to protect it from damage and to insure an uninterrupted supply. The Contractor shall locate temporary piping and services out of traveled ways where practicable, in locations where it will cause the least obstruction and inconvenience, and where it will be least subject to damage.

7.2.3 The bypass main shall be supplied from **dual check valve assembly** connections made to hydrants or existing water mains that are to remain in service. The Contractor shall furnish all work and fittings and make all necessary connections required to supply the bypass pipes (including services) with water from hydrants or existing water mains. All connections to existing water mains shall be swabbed with chlorine and flushed prior to placing in service.

7.2.4 All temporary customer service connections shall extend from the bypass pipe and terminate at the connection to the building plumbing. Temporary building services shall include all necessary hoses, pipes, valves and fittings of approved size, required to

service OWNER consumers. **By-pass material components (including but not limited to temporary service hoses, couplings, adapters, valves, garden hose wyes, hose ends, and all other fittings and appurtenances) shall be manufactured in accordance with AWWA Standard C800 and shall be "Lead-Free" as defined for lead-free brass alloys in accordance with the ANSI/NSF-60 and ANSI/NSF-61 standards for components in contact with potable water. These products shall have the letters "NL" or "LF" cast into the main body for proper identification.** The Contractor shall make the actual connection and disconnection to the consumer's building plumbing, and shall coordinate his work with the owner of any building to be serviced so that there will be the least amount of inconvenience to the owners. In general, the Contractor may connect temporary service hose or piping to the consumer's plumbing by any means acceptable to the Owner and the property owner, including either inside or outside connections to temporarily disassembled water system components, or direct connections to hose bibs, standpipes or other acceptable connection points. The locations of connections and methods used must be acceptable to the OWNER and the property owners. Connection to the hose bib requires the installation of a wye fitting to allow the property owner use of the hose bib. After multiple failed attempts to gain access to the meter, the contractor shall excavate the service and directly connect to the service curb stop. This shall be accomplished at no cost to the OWNER.

7.2.4.1 Each building shall be individually serviced by by-pass tubing; a by-pass service cannot be shared between two facilities. At no time shall two services be interconnected as part of a permanent temporary by-pass system. As a short term remedy to an emergency situation, the interconnection may be permissible at the direction of OWNER.

7.2.4.2 When connecting service tubing, it will not be acceptable to shut the curb stop as a means of isolating the customer's service line. The contractor must gain access to the meter location and close the valve before the meter and/or disconnect the meter assembly (as required) before connecting service tubing to the sill cock. The valve on the street side of the meter must be shut to prevent leakage into to replacement/relining main.

7.2.4.3 At no time shall a customer's basement window be "left open" to allow the installation of the by-pass service line and/or the service blowback hose. A suitable temporary cover must be fitted over the window opening as not to allow weather or animals into the home. This cover must be approved by the building owner.

7.2.4.4 By-pass piping must be installed to serve every customer. Service tubing is not considered by-pass pipe and will not be measured for payment. Service tubing in excess 100' must be chlorinated.

7.2.5 Temporary service connections for select commercial facilities will require temporary backflow prevention devices while temporary water service is provided throughout the

construction period. Where directed by the OWNER, the Contractor shall accommodate these commercial facilities, which include but are not limited to, dentist offices, laboratories, medical facilities, and restaurants.

7.2.6 The Contractor shall be responsible for providing adequate temporary supply for buildings or commercial facilities that are served with separate fire service lines. The Contractor is not allowed to connect directly to existing, exterior, "Siamese" service connections for these building facilities. The Contractor may be required to excavate, tap or directly connect to the existing, underground fire service, with temporary fire service piping, of the sizes required, and as directed by the OWNER.

7.2.7 After temporary service connections are completed, the Contractor shall check each building to insure that the applicable existing service(s) to the buildings are shut off at the curb stop (by OWNER work forces) or at gate valve(s), as applicable, outside the building or within the interior of the building as required, to prevent any potential back feeding of water into the new or existing pipelines during water main replacement and/or cleaning and lining operations.

7.2.8 Once put in use, all temporary piping and services shall be maintained until the new water main or newly-lined existing water main is placed in service. Any interruptions, whether caused by frost, physical damage or otherwise, shall be immediately corrected, and the service restored or replaced by the Contractor without additional payment.

7.2.9 All out-of-service fire hydrants, new or existing, shall be clearly indicated "Out of Service" utilizing orange out-of-service bags or other methods acceptable by the Owner and the local Fire Department or City/Town Agency.

7.3 PIPING CROSSING TRAVELED WAYS

7.3.1 The Contractor shall install temporary bypass piping in such a manner as to minimize the number of street crossings required. Where temporary bypass pipes and service lines are permitted to cross streets, driveways or sidewalks, the Contractor shall provide all necessary and required construction to protect and prevent injury to persons, property, vehicles and pipelines. At street crossings, narrow trenches shall be excavated and the pipe shall be installed below the roadway surface with bituminous concrete (hot-mix or cold patch) placed around and above the pipe flush with the existing roadway surface. At driveways, provisions shall be made, as approved by the Owner, to permit vehicles to drive over the temporary pipe by the use of **rubber hose ramps**. Unprotected flexible service hose is not acceptable for driveway crossings. In areas of high traffic and business entrance crossings all 4” and 6” by-pass piping must be buried and paved with temporary asphalt. At sidewalk crossings, provisions

shall be made, as approved by the owner, to permit the safe travel of pedestrians by the use of **rubber hose ramps**. These ramps must meet or exceed ADA requirements. At the Owner's discretion, ramps constructed of bituminous concrete (hot-mix or cold patch), wood or other acceptable material on each side of the pipe; by depressing the pipe as at street crossings; or by other methods that may be acceptable and suitable for the purpose intended. **Gravel or stone dust alone will not be considered suitable material.**

7.3.2 The Contractor shall provide watchmen, lights, barriers, signs and such other methods as may be necessary or required to maintain and direct traffic through the project and to prevent injury to persons and property and to comply with all State and City safety codes, ordinances and regulations. Separate payment will not be made for the furnishing of watchmen, lights, barriers, signs, etc. for protection of traffic and to prevent injury to persons and property.

7.3.3 All pavement shall be saw-cut; trench excavations shall be straight and all cut edges shall have clean vertical faces. Permanent restoration required to restore street pavement, sidewalks, and driveways damage or displaced as a result of the work under the section, is specified under Section 08000 of the Special Conditions - "Paving, Surfacing, and Permanent Repairs to Streets and Sidewalks". No separate payment will be made for the temporary restoration nor saw-cutting required for the bypass, and all associated cost shall be included with the Owner-approved "Not to Exceed Lump Sum" price of respective project assignments or "Unit Rates" for the respective bid items specified for the Contract work.

7.4 DISINFECTION

7.4.1 All temporary bypass lines, services and connections shall be disinfected just before being placed into service. Disinfection of service lines shall be done as part of the work included under this section of the specifications, and in accordance with the disinfection requirements specified under Section 5000, Utility Piping.

7.5 DISCONNECTION AND REMOVAL OF TEMPORARY PIPING

7.5.1 After the new water main is accepted and placed in service, and permanent service to consumers has been restored, and when approved, the Contractor shall remove all temporary bypass piping and building service connections and all other temporary work, as directed; place temporary paving, as required; restore all walks, drives, curbs, grassed areas to their original condition, and such other parts which have been disturbed as a result of the Contractor's operations; and do all other work as necessary and directed, to leave all work and property in a clean and acceptable condition, at no additional expense to the OWNER. When the by-pass pipe and the driveway

crossing material is removed, the Contractor, using a self-contained road sweeper, must clean both sides of the road where the by-pass piping was installed. The aforementioned restoration must be completed no more than five (5) business days following the removal of the last service from by-pass. Where a bypass is to be retained for service to adjacent sections or streets, the work shall be so scheduled to minimize the overall "in- place" time.

7.5.2 To flush any residual, cleaning and lining material or heavily chlorinated water from the service line, each service shall be flushed through a blow-back hose before reconnecting the meter.

7.6 TEMPORARY CONNECTIONS TO EXISTING WATER MAINS

7.6.1 At some locations, as directed or approved by the OWNER, it may be necessary to install tees or corporation stops in existing water mains in order to supply the temporary bypass piping with water service. The types of connections made shall be determined by the water service requirements and shall be as approved or directed by the Owner. All connections to existing water main shall be disinfected by the swab method prior to attachment.

7.6.2 At locations, as approved or directed by the OWNER, where connections for temporary bypass piping are to be made underground to the existing water mains with corporation stops, the Contractor shall make the necessary excavations at the locations and to the limits as necessary to uncover the existing underground water lines and permit the installation of corporation stops. The Contractor shall furnish and install a corporation stop, a pipe nipple or gooseneck and a shut-off valve at the connection to the existing water line; connect the temporary bypass piping to the shut-off valve and, where directed by the OWNER, backfill the excavation and install temporary bituminous pavement. When the need for the service piping has ceased, the Contractor shall re- excavate, where necessary; close the corporation stop; disconnect and remove the service piping, shut-off valve, and pipe nipple or gooseneck; backfill the excavations; and provide the gravel base course and permanent pavement over the excavated and disturbed areas, in accordance with the requirements specified, and as directed.

7.7 TEMPORARY FIRE HYDRANTS

7.7.1 Where fire hydrants are bypassed, the Contractor shall furnish, install, maintain and remove temporary hydrants. Temporary fire hydrants must be installed within 50 feet of the existing hydrant it is replacing. Temporary hydrants may be located across the street from the permanent hydrant. A minimum of a 4-inch bypass line, with a

4-inch outlet and valve, shall serve as a temporary hydrant. Temporary hydrants shall meet the approval of the OWNER, and shall be set in such a manner that the Fire Department will have no difficulty making a connection with a fire hose, and where they will cause the least obstruction to vehicular and pedestrian traffic, and will be least likely to be damaged. Nozzles shall be threaded for a cap and grooved for a fire hose attachment which meets the requirements of the governing Fire Department. Before permanently shutting off the water main that is to be replaced, the Contractor shall test all temporary hydrants and valves to be sure that they are in proper working order. Once put into use, the temporary hydrants shall be maintained until the existing hydrants and/or new hydrants are restored to service. No separate payment will be made for such work, and all associated cost shall be included with the Owner-approved "Not to Exceed Lump Sum" price of respective project assignments or "Unit Rates" for the respective bid items specified for the Contract work.

Field Quality Control

8.1 PROTECTION

8.1.1 The Contractor shall be responsible for taking and providing all necessary and required precautionary measures at all times during the installation and removal of the temporary bypass service piping and building service connections, to prevent any contamination of the OWNER distribution system, and for the protection of public health and safety. When de- chlorinating by- pass piping, water discharged from the piping shall be free of residual chlorine.

8.1.2 The Contractor shall be responsible for providing labor, materials, and equipment on a twenty-four (24) hour stand-by status to maintain continuous water service to all OWNER costumers at no additional cost to the OWNER. Any service interruptions, whether caused by defective piping, pipe jointing or other components; physical damage by vehicles; vandalism; frost action; or other unforeseen reasons, shall be immediately corrected and repaired so as to restore the temporary service to all OWNER customers as soon as possible.

END OF SECTION

SECTION 08000

PAVING, SURFACING, AND PERMANENT REPAIRS TO STREETS AND SIDEWALKS

SECTION 08000
PAVING, SURFACING, AND PERMANENT REPAIRS TO STREETS, DRIVEWAYS, AND SIDEWALKS

General Provisions

1.1 DEFINITION OF TERMS

1.1.1 Paving and surfacing refers to all temporary and permanent placements of bituminous concrete, Portland Cement concrete, stone, and/or brick materials, on streets, roads, highways, private rights of way, curbs, driveways, and sidewalks, associated with removal and/or installation of water mains and/or appurtenances.

1.1.2 Permanent repairs to streets, roads, highways, private rights of way, curbs, driveways, and sidewalks, refers to the restoration of paving and surfacing in a manner satisfactory to the Owner and to the satisfaction of the proper state and/or municipal officials having jurisdiction of the area in question. The final surfaces of the repaired area shall match the existing surface elevations precisely and shall provide proper drainage. Restoration to proper line and grade, as directed by the OWNER and/or in accordance with local and/or state ordinances, shall utilize the methods of Mill and Overlay or by Infra-Red Bituminous Surface Repairs as required.

1.1.3 **Temporary hot mix asphalt** shall be defined as hot mix asphalt placed to maintain the pavement until permanent patches are placed. All excavations within sidewalks, private and commercial driveways, and at select street locations as directed by the OWNER, will not be permanently restored with full depth hot mix asphalt within the same working day. As such, the contractor shall place a minimum two (2) inch temporary hot mix asphalt pavement patch each day after completion of work in a roadway segment. The two (2) inch temporary hot mix asphalt pavement shall be removed after a 60-day settlement period and permanent asphalt shall be placed to match the existing pavement structure in kind (no less than 4" for non-state roads and 6" for state roads). Temporary pavement shall be the same plant asphalt mix as specified for the permanent surface course under the Materials Section (Article 4.3) of this section of the Contract Specifications.

1.1.4 **Full depth hot mix asphalt** shall be defined as hot mix asphalt placed immediately following trench compaction to maintain the pavement until either a 2" micro-mill and overlay or infrared pavement restoration can be accomplished. All paved areas disturbed in these contracts shall be permanently restored with full depth hot mix asphalt within the same working day. Full depth hot mix asphalt patches shall match the existing pavement thickness in kind (no less than 4" for non-state roads and 6" for state roads). Full depth hot mix asphalt shall be the same plant asphalt mix as specified for the permanent surface course under the Materials Section (Article 4.3) of this section of the Contract Specifications.

SECTION 08000
PAVING, SURFACING, AND PERMANENT REPAIRS TO STREETS, DRIVEWAYS, AND SIDEWALKS

1.2 REFERENCES:

a.	AASHTO M20	Asphalt Cement
b.	AASHTO M17	Filler Material
c.	ASTM D-1073	Aggregates
d.	AASHTO M85	Portland Cement
e.	RIDOT, Standard Specifications for Road and Bridge Construction	Bituminous Pavement - Part 400 Concrete Pavement - Part 500

2.1 SUBMITTALS

2.1.1 The Contractor shall provide submittals in accordance with Section 13 of the General Requirements.

2.1.2 The Contractor shall submit for OWNER's approval a list of materials including, but not limited to, temporary and permanent paving and surfacing materials.

2.1.3 The Contractor shall submit to OWNER a list of equipment to be used in temporary and permanent paving and surfacing.

2.1.4 A Subcontractor must be approved by the OWNER before any subcontract work is performed. The Contractor is responsible for any and all work performed by their Subcontractors.

3.1 QUALITY ASSURANCE

3.1.1 Reference Section 8, "Quality Assurance" of "Section 01000 - General Requirements".

3.1.2 The Contractor shall comply with the requirements of any agency or codes having jurisdiction over the work.

SECTION 08000
PAVING, SURFACING, AND PERMANENT REPAIRS TO STREETS, DRIVEWAYS, AND SIDEWALKS

General Provisions

4.1 ROADWAY AND SIDEWALK OPENING

4.1.1 In all instances of roadway and side walk opening for the purpose of performing water work, Contract shall saw-cut the pavement in straight parallel lines and rectangular in shape with an abrasive wheel power saw, unless otherwise specified. Under no circumstances shall the pavement cut be made using a hammer or drop weight. All pavement cuts shall be full depth through the pavement; and, backfill in maximum one (1) foot lifts and place at minimum twelve (12) inches of gravel subbase, compacted to RIDOT Standard Specifications.

4.1.2 Restoration of any altered roadway shall commence immediately after the completion of the alteration, and shall include, if necessary, temporary or intermediate restoration on an ongoing basis to allow traffic to pass over a smooth surfaced roadway until the permanent restoration can be completed.

4.2 MATERIALS

4.2.1 All materials used must conform to the requirements as contained in this section.

4.2.2 All equipment, materials and articles incorporated in the work are to be new and of the best grade of their respective kinds for the purpose. Wherever in the Contract Documents a particular brand, make of material, device or equipment is shown or specified, such brand, make of material, device or equipment is to be regarded merely as a standard.

4.2.3 Any other brand, make of material, device or equipment which, in the opinion of the OWNER is the recognized equal of that specified, considering quality, workmanship and economy of operation, and is suitable for the purpose intended, will be accepted. For all items in the specifications which are described or defined, it is understood that such information indicates the character of the required items and interpretations with respect to nonessential details will be made so as to provide competition among manufacturers of substantially equivalent items. The workmanship, shall in every respect be in accordance with what, in the opinion of the OWNER, is the best modern practice. No materials or supplies for the work shall be purchased by the Contractor or any subcontractor subject to any chattel mortgage or under a conditional sale or other agreement by which an interest is retained by the seller. The Contractor warrants that he has good title to all materials and supplies used by them in the work. The

OWNER reserves the right at all times to reject or approve materials to be used in the performance of this contract.

4.2.4 Certificates of compliance must be furnished upon request.

4.3 BITUMINOUS CONCRETE - PLANT MIX (BASE COURSE)

4.3.1 Bituminous Concrete Base Course Pavement mixtures shall be composed of a bituminous binder and of crushed stone or crushed gravel.

4.3.2 Bituminous material - the asphalt cement shall conform to the requirements of AASHTO M 20.

4.3.3 Crushed stone or crushed gravel - the course aggregate (retained on a no. 8 sieve) shall be crushed stone, or crushed or natural gravel, and shall conform to the gradation and quality requirements of the latest revision to the State of Rhode Island, Department of Transportation, Standard Specifications for Road and Bridge Construction, and all subsequent Addenda.

4.3.4 Composition of Bituminous Concrete Base Course Pavement - The plant mix base course material aggregate, mineral filler, and asphalt cement shall be well graded between the limits specified and shall conform to the composition limits by weight as delineated in the latest revision to the State of Rhode Island, Department of Transportation, Standard Specifications for Road and Bridge Construction, and all subsequent Addenda.

4.3.5 Class(es) of hot mix asphalt for permanent pavement shall be in accordance with the RIDOT Hot Mix Asphalt Matrix. New asphalt pavement in streets and sidewalks shall at minimum consist of Class 9.5 bituminous concrete pavement as specified herein.

4.4 BITUMINOUS CONCRETE - PLANT MIX (BINDER COURSE AND SURFACE COURSE)

4.4.1 Bituminous Concrete Binder Course and Surface Course Pavement mixtures shall be composed of a bituminous binder and of crushed stone or crushed gravel.

4.4.2 Bituminous material - the asphalt cement material shall conform to the requirements of AASHTO M20.

4.4.3 Coarse aggregate - shall be that portion of the aggregate retained on a #8 sieve and shall consist of either crushed ledge rock or crushed gravel.

4.4.4 Fine aggregate - shall consist of natural sand, stone screening, or a combination thereof, and shall conform to the quality requirements of ASTM D-1073.

4.4.5 Filler material - shall conform to the requirement of AASHTO 17.

4.4.6 Composition of Bituminous Concrete Binder Course and Surface Course Pavement - The plant mix binder course and surface course material aggregate, mineral filler, and asphalt cement shall be combined to meet the composition limits by weight as delineated in the latest revision to the State of Rhode Island, Department of Transportation, Standard Specifications for Road and Bridge Construction, and all subsequent Addenda.

4.4.7 Composition of Bituminous Concrete Friction Course Pavement - The plant mix binder course and surface course material aggregate, mineral filler, and asphalt cement shall be combined to meet composition limits by weight as delineated in the latest revision to the State of Rhode Island, Department of Transportation, Standard Specifications for Road and Bridge Construction, and all subsequent Addenda.

4.4.8 Class(es) of hot mix asphalt for permanent pavement shall be in accordance with the RIDOT Hot Mix Asphalt Matrix. New asphalt pavement in streets and sidewalks shall at minimum consist of Class 9.5 bituminous concrete pavement as specified herein.

4.4.9 All materials are subject to the OWNER's approval.

4.5 GRAVEL BORROW SUBBASE

4.5.1 Gravel borrow subbase shall conform to the gradation requirements of the latest revision to the State of Rhode Island, Department of Transportation, Standard Specifications for Road and Bridge Construction, and all subsequent Addenda.

4.5.2 All materials are subject to the OWNER's approval.

4.6 BONDING

4.6.1 Prior to placement of asphalt, all excavations shall be re-sawcut, full depth through the pavement, at minimum one (1) foot from all vertical edges of the initial utility work trench(es) to expose a fresh, full thickness, vertical face prior to installing permanent pavement. An asphalt emulsion tack coat shall be brush-painted or pressure sprayed on all pavement edges, prior to placing the new bituminous mixture, to ensure proper bonding of new and old pavements.

4.7 PORTLAND CEMENT CONCRETE

4.7.1 The Contractor shall furnish and install all Portland Cement concrete for road pavements, road bases, sidewalks, thrust blocks, and miscellaneous uses.

4.7.2 Cement - shall be domestic Portland Cement conforming to both the chemical and physical requirements of AASHTO M85.

4.7.3 Fine aggregate - shall conform to the requirements of AASHTO M6 and consist of natural sand, manufactured sand produced from larger aggregate, or a combination thereof.

4.7.4 Coarse aggregate - shall consist of screened gravel, crushed gravel, or crushed quarry rock conforming to the requirements of AASHTO M80.

4.7.5 The Portland Cement Concrete - shall be Class "XX" for road bases; Class "A" for driveways and sidewalks; Class "B" for thrust blocks and miscellaneous uses, and all classes must develop a minimum ultimate compressive strength of 3000 psi at 28-days. The maximum size of the coarse aggregate shall be 3/4". The percentage of air entrained in the mix shall be six percent (6%) +/- 1%. Slump shall be in the range of 1-3 inches at the site. All materials contained in the mix shall conform to all applicable requirements of the latest revision to the State of Rhode Island, Department of Transportation, Standard Specifications for Road and Bridge Construction, and all subsequent Addenda.

4.8 OTHER MATERIALS

4.8.1 The Contractor shall provide all other materials not specifically described but required for complete and proper pavement placement and/or restoration.

4.8.2 All materials are subject to the OWNER's approval.

Execution

5.1 TEMPORARY PAVEMENT

5.1.1 Unless otherwise directed, the Contractor shall provide all labor, material, equipment and excavation required for pavement restoration. The temporary pavement shall be compacted flush with the existing adjacent pavement, and conform to the existing cross-section of the roadway, sidewalk, or driveway, or as directed.

5.1.2 Depending on location, all backfilled trench excavations and service patches shall receive **either 2" temporary hotmix asphalt or "full depth asphalt" pavement on a daily basis**, and no backfilled trench excavations shall remain unpaved over a weekend period.

5.1.3 The two (2) inch temporary hot mix asphalt pavement in sidewalks, private and commercial driveways, and at select street locations (directed by the OWNER) shall remain in-place and be maintained by the Contractor for a period of not less than sixty (60) days from the date of placement. For maintenance and warranty requirements, reference Articles 7.6 and 7.7 in "Section 01000 - General Requirements".

5.1.4 Placement of the temporary paving shall be in accordance with the Local, City, Town and/or State regulations and ordinances. In sidewalks, private and commercial driveways, and at select street locations (directed by the OWNER), the removal of the temporary pavement and the subsequent placement of the permanent pavement shall not be performed until after the above specified period, or at a time as directed by the Owner.

5.1.5 With the exception of sidewalks, private and commercial driveways, and at select street locations (directed by the OWNER), the typical 2" temporary hotmix restoration will not be required. All paved areas disturbed in these contracts shall require full depth hotmix asphalt restoration. After a 60-day settlement period, trench excavations in the roadway shall be permanently restored via 2" micro-mill and overlay by the Contractor. Limits of final restoration shall conform to all applicable requirements of the latest revision to the State of Rhode Island, Department of Transportation, Minimum Standards for State and Municipal Road Repair for Utility Work (as established by Rhode Island General Laws 1956 § 39-2.2-4).

5.1.6 Reference requirements in Article 7.5, "Permanent Street Pavement Restoration" of "Section 01000 - General Requirements". On sections of roadway where full depth hotmix asphalt restoration is required, the Contractor at his discretion (and at no additional expense to the OWNER) may install a two (2") inch temporary hotmix pavement to account for settlement, and then remove it to apply full depth pavement after a settlement period.

5.1.7 Contractor shall maintain all 2" temporary hotmix and "full depth asphalt" patches in accordance with these specifications. The Contractor shall promptly repair trench failures upon notification by the OWNER. Failure to comply may result in permit revocation by the permitting DPW.

5.2 PERMANENT PAVEMENT IN STREETS, SIDEWALKS, AND DRIVEWAYS

5.2.1 The Contractor shall provide all labor, material, equipment and excavation required to install permanent pavement as specified in this section of the Contract Specifications, or as directed by the OWNER. To match existing pavement thickness, all asphalt pavement shall be placed and compacted (at minimum) in two separate equal layers (lifts).

5.2.2 Unless otherwise directed, the Contractor shall perform typical permanent pavement restoration in sidewalks, private and commercial driveways, and at select street locations (directed by the OWNER), or as specified herein, for such restorations that will require the removal of the conventional 2-inch temporary pavement.

5.2.3 For asphalt street restoration, or as directed by the OWNER, the Contractor shall install sufficient pavement to match the existing pavement thickness as described in Section 7.5, "Permanent Street Pavement Restoration" of "Section 01000 - General Requirements." The conventional saw cutting of existing pavement edges along trenches will not be required at locations where the Contractor is placing "full depth asphalt" pavement to be followed by mill and overlay or infrared restoration.

5.2.4 In sidewalks, private and commercial driveways, and at select street locations (directed by the OWNER), upon removal of the temporary pavement, the existing pavement shall be re-sawcut to straight lines beyond any damaged pavement on both sides of the trench to a distance 12" beyond the existing edge of the damaged area, or as directed in the field by OWNER.

5.2.5 Limits of permanent restoration shall be delineated by the requirements of the latest revision to the State of Rhode Island, Department of Transportation, Minimum Standards for State and Municipal Road Repair for Utility Work (as established by Rhode Island General Laws 1956 § 39-2.2-4). Where traffic loops are encountered, these limits will extend to include the complete repair and restoration of these traffic control devices.

5.2.6 Placement of permanent paving shall be in accordance with the Local, City, Town and/or State regulations and ordinances.

5.2.7 Prior to the placement of the final surface course, all vertical and horizontal pavement surfaces of the adjacent pavement shall be thoroughly coated with an asphalt emulsion tack coat to ensure proper bonding of new and old pavements.

5.2.8 The paving mixture shall be compacted by means of a power roller of sufficient size, or as directed by the OWNER, to give proper compaction. In places inaccessible to the roller, compaction must be accomplished by means of a mechanical compactor.

5.2.9 Within the limits of paving and areas disturbed during construction operations, the Contractor shall (at no additional cost) repair traffic loops, restore pavement markings, reset all manholes, grates, drainage structures, valve boxes, curb stop service boxes, and other utility road boxes to the existing or modified grades in accordance with the procedures of the appropriate utility.

5.2.10 Prior to winter shutdown, all sawcuts that have not been excavated or patched shall be crack sealed.

5.3 LOAM AND SEED

5.3.1 The Contractor shall perform all excavation to prepare the designated areas to receive a 4-inch deep loam bed. All loamed areas shall be trimmed and graded to true lines and existing grades. All loamed and seeded areas shall be fine raked and subsequently rolled and tamped.

5.3.2 All loamed areas shall be free of large stones, brush, roots, stumps, litter, or other foreign material. All seed beds shall be cultivated before seeding and seeding shall not be permitted on any area unless the surface presents a loose friable seed bed.

5.3.3 Fertilizer shall be commercial grade 10-6-4. Application shall be at a rate of 0.20 lb.

per sq. yd. Lime shall consist of a standard commercial product of ground dolomitic limestone intended for agricultural use. Limestone shall be spread evenly and incorporated thoroughly into soil. Application shall be at a rate of 0.5 lb. per sq. yd. Grass seed shall be equal in mixture to Improved U.R.I. No. 2. Application shall be at a rate of 0.05 lbs. per sq. yd.

5.3.4 Landscape work shall only be performed during acceptable growing seasons, as defined for USDA hardiness zone 6b. The Contractor shall be responsible for the watering of the newly seeded areas to promote satisfactory initial grass growth within the restored grassed areas. Depending on weather conditions multiple waterings may be required as part of the overall grass restoration work.

Repair/Restoration

6.1 GENERAL

6.1.1 The Contractor shall abide by all Local, City, Town and/or State regulations and ordinances associated with repair and restoration of pavement, curbing, driveway, and sidewalk materials which were lost, damaged, or destroyed as a result of his operations

6.1.2 Repair of select street locations, driveway and sidewalk openings shall be at least 12 inches larger than the trench excavation on all sides. If the street, driveway, or sidewalk opening is within two feet of the curb, then the restored top courses of the permanent patch shall be replaced to the curb.

6.1.3 Final street pavement restoration shall include two (2) inches of micro-milling and resurfacing all impacted travel lanes and/or shoulders for their full width using Class 9.5 or 12.5 hot mix asphalt (as directed by OWNER). Impacted travel lanes and/or shoulders are the roadway pavement areas that the utility work trench(es) are located within. In addition to the roadway pavement areas impacted by the utility work trenches, this final pavement restoration shall also apply to all travel lanes and/or shoulders impacted by either lateral or longitudinal utility work trenches when the trenches are less than or equal to one hundred (100) feet longitudinal from one another, including the sections between trenches, so that no section(s) of roadway pavement less than or equal to one hundred (100) feet shall remain unpaved. This will provide a continuous final pavement between the utility work trenches.

6.1.4 Where required or as directed by the OWNER, bituminous patches of streets shall be repaired by the Infra-red method as specified in Section 8100 "Infrared Bituminous Pavement Restoration."

6.1.5 Any openings which have settled more than two (2) inches shall not be permanently restored until notification has been made to the OWNER and the Contractor has received authorization from the OWNER to restore such hole. The OWNER reserves the right to require re-excavation and compaction of such holes.

6.1.6 All edges of existing paving or surfacing shall be re-sawcut with an abrasive wheel power saw to a neat, straight, and parallel alignment rectangular in shape, within the limits specified herein, prior to the placement of permanent restoration at no additional cost to the Owner. Under no circumstances shall the pavement cut be made using a hammer or drop weight. All pavement cuts shall be full depth through the pavement.

6.1.7 An excavation patch with less than 2 inches of settlement shall be removed to depth of at least eight (8) inches below base course. Compaction of the clean gravel borrow material must be accomplished by means of a mechanical compactor.

6.1.8 The OWNER and/or the respective DPW Representative, or his designee, may inspect all openings prior to and during the placing of all materials used in the restoration process.

6.2 PERMANENT RESTORATION OF BITUMINOUS CONCRETE STREETS

6.2.1 For non-state-owned roads, at a minimum, the restored pavement thickness shall match the existing depth of the roadway, or equal four (4) inches, whichever is greater. When the existing street pavement thickness is equal to or less than four (4) inches, the permanent pavement structure shall be as specified below under Article 6.2.2. Where the existing pavement thickness exceeds four (4) inches, and the existing base is crushed stone and stone dust or plant mix, four (4) inches of a bituminous concrete plant mix base course will be placed in two (2) equal layers (2" maximum depth) and compacted with mechanical equipment. All thicknesses shall be after compaction.

6.2.2 A sufficient amount of bituminous concrete binder course (minimum 2") will be placed to a point two (2) inches below the existing surface. A two (2) inch bituminous concrete surface (wearing) course will be placed to complete the restoration for a final

pavement thickness of four (4) inches. All thicknesses shall be after compaction.

6.2.3 Prior to the placement of the final permanent pavement, all edges of the adjacent pavement shall be thoroughly coated with an asphalt emulsion tack coat to ensure proper bonding of new and old pavements.

6.2.4 The paving mixture shall be compacted by means of a roller of sufficient size, or as directed by the OWNER, to give proper compaction. In places inaccessible to the roller, compaction must be accomplished by means of a mechanical compactor. All thicknesses shall be after compaction.

6.3 PERMANENT RESTORATION OF PORTLAND CEMENT CONCRETE BASE STREETS

6.3.1 In accordance with the RIDOT Standard Specifications for concrete base streets, Portland Cement concrete shall be used as a replacement and placed to the exact depth as found or six (6) inches (whichever is larger). The Concrete shall set for a 72 hour period. During this time a construction steel plate shall be placed over the construction area. Drilling and doweling shall be required.

6.3.2 A hot mix bituminous concrete binder course matching the existing pavement thickness will be placed in two lifts up to the existing surface.

6.3.3 All edges of existing paving or surfacing shall be re-sawcut with an abrasive wheel power saw to a neat, straight, and parallel alignment rectangular in shape, within the limits specified herein, prior to the placement of permanent restoration at no additional cost to the Owner. Under no circumstances shall the pavement cut be made using a hammer or drop weight. All pavement cuts shall be full depth through the pavement.

6.3.4 The paving mixture shall be compacted by means of a roller of sufficient size, or as directed by the OWNER, to give proper compaction. In places inaccessible to the roller, compaction must be accomplished by means of a mechanical compactor. All thicknesses shall be after compaction.

6.3.5 Contractors are responsible for the concrete base restoration on all concrete based roads disturbed during construction. Should the Contractor choose to place 2" temporary hotmix asphalt rather than plate before pouring concrete, he shall do so at his convenience and shall not be compensated.

6.3.6 With regard to water main relay projects, the same 2" temporary hotmix asphalt stipulation applies. The placement of 2" temporary hotmix asphalt along sections of roadway with concrete base shall not be compensated separately for payment.

6.4 PERMANENT PAVEMENT RESTORATION ON STATE OF RHODE ISLAND OWNED ROADS

6.4.1 For state-owned roads, at a minimum, the restored pavement thickness shall match the existing depth of the roadway, or equal six (6) inches, whichever is greater. All edges of existing paving or surfacing shall be re-sawcut with an abrasive wheel power saw to a neat, straight, and parallel alignment rectangular in shape, within the limits specified herein, prior to the placement of permanent restoration at no additional cost to the Owner. Under no circumstances shall the pavement cut be made using a hammer or drop weight. All pavement cuts shall be full depth through the pavement.

6.4.1 The temporary patch and the existing subgrade material shall be removed to a depth of nine (9) inches. Compaction of the subgrade material shall be accomplished by means of a mechanical compactor.

6.4.2 Six (6) inches of a bituminous concrete plant mix base course will be placed in two (2) equal layers (3" maximum depth) and compacted with mechanical equipment. All thicknesses shall be after compaction.

6.4.3 Bituminous concrete binder courses will be placed in equal layers (3" maximum depth per binder layer) and compacted with mechanical equipment. A sufficient amount of bituminous concrete binder course (minimum 4") will be placed to a point four (4) inches below the existing surface. A two (2) inch bituminous concrete wearing course will be placed to complete the restoration. All thicknesses shall be after compaction.

6.4.4 Prior to the placement of the final surface course, all edges of the adjacent pavement shall be thoroughly coated with an asphalt emulsion tack coat to ensure proper bonding of both new and old pavements.

6.4.5 The paving mixture shall be compacted by means of a power roller of sufficient size, or as directed by the OWNER, to give proper compaction. In places inaccessible to the roller, compaction must be accomplished by means of a mechanical compactor. All thicknesses shall be after compaction.

6.5 PERMANENT RESTORATION OF BITUMINOUS SIDEWALKS AND DRIVEWAYS

6.5.1 In areas where existing sidewalks are to be removed and/or new sidewalks construction is required, the Contractor's attention is directed to the fact that miscellaneous items such as parking meter and/or bases, traffic control signs, light poles and bases, mail boxes, etc. are not specified in the contract. However, all items shall be protected from damage and shall remain in place unless removed by others. All curb stop (valve) boxes, gate boxes, frame and covers, etc., shall be reset to finish flush with the new sidewalk pavement.

6.5.2 Impacted asphalt sidewalks and driveways full width shall be restored in accordance with RI Standard 43.2.0. Asphalt sidewalks and driveways shall be paved with a full depth of three (3) inches (2 lifts of 1½ inches each) of the same material used for bituminous concrete street surface course. The Contractor shall remove 2 inches of temporary pavement and an additional one inch of the pavement material to provide the space for the 3 inches of permanent pavement. The paving mixture shall be compacted by means of a power roller of sufficient size, or as directed by OWNER, to give proper compaction. In areas inaccessible to the roller, compaction must be accomplished by means of a mechanical compactor.

6.5.3 Compaction of the subgrade material must be accomplished by means of a mechanical compactor.

6.5.4 The elevation of the new sidewalk surface shall match the original surface elevation prior to disturbance.

6.6 PERMANENT RESTORATION OF CONCRETE SIDEWALKS AND DRIVEWAYS

6.6.1 Contractor shall restore full panels of impacted concrete sidewalk in accordance with RI Standard 43.1.0; and full panels of impacted concrete driveways in accordance with RI Standard 43.5.0.

6.6.2 In areas where existing sidewalks and driveways are to be removed and/or new sidewalks construction is required, the Contractor's attention is directed to the fact that miscellaneous items such as parking meter and/or bases, traffic control signs, light poles and bases, mail boxes, etc. are not specified in the contract. However, all items shall be protected from damage and shall remain in place unless removed by others. All curb

stop (valve) boxes, gate boxes, frame and covers, etc., shall be reset to finish flush with the new sidewalk pavement.

6.6.3 Where a replacement sidewalk or driveway meets or abuts an existing sidewalk or driveway, the existing sidewalk or driveway shall be neatly saw cut at existing "dummy joints" and the new surface shall match the original condition prior to disturbance.

6.6.4 The thickness of sidewalks and driveways shall be in accordance with Local, City, Town and/or State regulations and ordinances at the time of construction, to a minimum depth of four (4) inches for sidewalks and six (6) inches at driveways, or to the depth of existing concrete, whichever is greater. The temporary pavement and sufficient additional depth of base material shall be removed to provide space for the required depth of concrete.

6.6.5 Placing of Portland Cement Concrete shall be performed in such a way as to avoid segregation of materials.

6.6.6 All concrete shall be formed, unless specified or directed otherwise. Forms shall be true to line and grade. Forms and form supports shall be subject to approval, but responsibility for their adequacy shall rest with the Contractor. Forms shall be properly braced and tied together so as to maintain position, shape and lateral stability. Forms shall be maintained sufficiently rigid to prevent deformation under load and when concrete is tamped or vibrated. Studs shall be spaced sufficiently close to prevent deflection of form material and consequent waviness in surface of concrete. Upon removal of side forms, the sides of the exposed slabs shall be protected immediately to provide a curing treatment equal to that provided for the surface.

6.6.7 The entire surface of the pavement shall be sprayed uniformly with white pigmented curing compound immediately after the finishing of the surface on and before the set of the concrete has taken place. The curing compound shall be of such character that the film will harden within 30 minutes after application. Should the film become damaged from any cause within the required curing period, the damaged portions shall be repaired immediately with additional compound. The curing compound shall not be applied during rainfall. Curing compound shall be applied under pressure at the rate of one gallon to not more than 150 square feet by mechanical sprayers. The spraying equipment shall be of the fully atomizing type equipped with a tank agitator. At the time of use, the compound shall be in a thoroughly mixed condition with the pigment uniformly dispersed throughout the vehicle. During application the

compound shall be stirred continuously by effective mechanical means. Hand spraying of odd widths or shapes shall not be permitted nor shall concrete compound be applied to the inside faces of joints to be sealed.

6.6.8 During curing, the concrete work shall be protected from pedestrian, animal, and vehicular traffic. The entire surface of the concrete shall set for a period of 72 hours, during which time all pedestrian and vehicular traffic shall be excluded. It is the Contractor's responsibility to protect concrete from all and any damage or displacement, including vandalism and weather.

6.6.9 Should a sidewalk panel be disturbed or damaged (broken, chipped, sawcut, removed, etc.) during the course of construction, the **entire sidewalk panel** shall be replaced as defined in this section. **Partial sidewalk replacement or "knockouts" are not permitted.** Saving the existing sidewalk panel to place back into the panel opening shall also not be permitted. Contractor shall replace entire sidewalk panel(s) within the limits of disturbance. Limits of sidewalk replacement shall be at the existing control joints of damaged and/or disturbed panels. Sidewalks shall be replaced in full accordance with all standards, requirements, details, licenses, and permits of the municipality in which the sidewalk is located.

6.7 PERMANENT RESTORATION OF CURBING

6.7.1 All existing concrete, granite, or bituminous curbing, which is disturbed or removed as a result of the Contractor's operations, shall be reinstalled, reset, or installed in kind and reset to original grade or in the case of bituminous curbing by the Contractor in a manner satisfactory to the Owner and the proper municipal and state officials, as applicable, having jurisdiction of the work area. This restoration work, which may require the cutting, trimming and fitting of the curbing, to satisfactorily reset the concrete or granite curbing or to install bituminous curbing, shall be performed at no additional expense to the Owner. The Contractor shall perform the utility work so as to minimize the impact and disturbance, if any, of the existing street curbing, and/or allow for the restoration of the disturbed curbing by resetting the existing concrete or granite curbing, or installing bituminous curbing, at the service replacement location. All curbing damaged or removed as a result of the Contractor's operations shall be repaired, reinstalled, replaced or restored by the Contractor in a manner satisfactory to the Owner and to the satisfaction of the proper state and municipal officials having jurisdiction of the in question, at no additional expense to the Owner.

6.7.2 Whereupon it is determined in the field that the existing concrete or granite curbing cannot be satisfactorily reset due to existing curb conditions, the Contractor will be directed to reset or remove and replace the existing curbing with new vertical face concrete or granite curbing beyond the typical service trench limits of disturbance and removal. Existing unsatisfactory curb conditions, which would prevent the satisfactory resetting of the existing curbing, include previously damaged or broken curb; broken or deteriorated concrete curbing; or sections of curbing missing from the existing street curb line at the location of the service work. Whereupon the Contractor is directed to reset existing curbing beyond the typical service trench limits, as approved by the Owner, the resetting of existing concrete or granite curbing will be measured for payment as described in Section 01150 "Measurement and Payment" of these Contract Specifications. Whereupon the Contractor is directed to perform the new curb replacement work, as approved by the Owner, the furnishing and installation of the new concrete or granite curbing, will be measured for payment as described in Section 01150 "Measurement and Payment" of these Contract Specifications. Similarly, whereupon the Contractor is directed to replace bituminous curbing within approved limits at a specific location, the installation of the new bituminous curbing will also be measured for payment as described in Section 01150 "Measurement and Payment" of these Contract Specifications.

6.7.3 New precast concrete or granite curbing, which may be required for select curbing restoration as directed by the Owner, shall be approved by the local municipal Department of Public Works, or the RI Department of Transportation (RIDOT), as applicable, for local streets or state roadways. Vertical face granite curbing shall conform to ASTM C615 standards and the fabrication requirements of Section M.09 (Curbing) of the RIDOT Standard Specifications for Bridge and Road Construction, latest edition. New precast concrete curbing shall also be furnished in accordance with the material and fabrication requirements of Section M.09 of the aforementioned RIDOT Standard Specifications. The installation of both granite curbing and precast concrete curbing, as may be required for select curbing restoration, as directed by the Owner, shall also conform to the construction methods of the RIDOT Standard Specifications. Unless otherwise directed, the new granite or precast concrete curbing shall be set so as to match the existing curb reveal of the existing adjacent curbing.

6.7.4 New bituminous curbing, which may be required for select curbing restoration as directed by the Owner, shall be approved by the local municipal Department of Public Works, or the RI Department of Transportation (RIDOT), as applicable, for local streets or state roadways. Bituminous curbing shall conform to the material and fabrication requirements of Section M.09 (Curbing) of the RIDOT Standard Specifications for Bridge and Road Construction, latest edition. The installation of

bituminous curbing shall also conform to the construction methods of the RIDOT Standard Specifications. The Contractor shall utilize suitable equipment for the placement of the bituminous curbing, or utilize an alternate means and method to satisfactorily restore the curbing in a manner compatible with the curb reveal and shape of the existing bituminous curbing.

6.8 RESTORATION OF TRAFFIC SIGNAL LOOP DETECTORS

6.8.1 In accordance with the RIDOT Standard Specifications, when the Contractor mills and overlays or otherwise resurfaces an existing roadway that will be open to traffic, and such operations damage existing traffic signal loop detectors, thereby rendering such to be non-functional, the Contractor shall restore (at no additional cost to the OWNER) properly operating detection within seven (7) calendar days. When existing detection is rendered non-functional by the Permittee's operations for any other reason, the Contractor shall restore (at no additional cost to the OWNER) properly operating detection within seventy-two (72) hours.

6.9 RESTORATION OF PAVEMENT MARKINGS

6.9.1 When applicable, the Contractor shall replace, at no additional expense to the Owner, all roadway pavement markings in the same locations as originally located prior to initial construction operations with epoxy resin paint, as per the RIDOT Standard Specifications.

6.9.2 Permanent epoxy resin pavement markings shall be placed no sooner than two (2) weeks but no later than four (4) weeks from the completion of the paving operation.

6.9.3 After final paving, as well as before permanent pavement markings are installed, Permittee shall install temporary waterborne reflectorized pavement markings, placed in the same locations as original markings, on any roadways opened to traffic at the completion of any day's paving operation.

6.9.4 Temporary pavement markings shall be furnished at disturbed locations, as an interim measure until permanent markings can be installed. The Contractor shall maintain these markings, at no additional cost, throughout the winter season.

6.10 ADJUSTMENTS OF UTILITY APPURTENANCES TO GRADE

6.10.1 At no additional expense to the Owner, all valve boxes, curb stops, manhole frames

and covers, catch basin frames and grates which are disturbed by construction operations shall be reset and adjusted to grade at the elevation of the final pavement in accordance with the specified procedures of the appropriate utility.

6.11 STAMPED CONCRETE

6.11.1 When encountered, the restoration of stamped or decorative concrete crosswalks, sidewalks, and roadway segments, shall be subject to local DPW requirements and restored at their discretion.

6.12 BRICK AND COBBLESTONE RESTORATION

6.12.1 Brick or cobblestone sidewalk, driveway, and street restoration, which may be required as directed by the Owner, shall be approved by the local municipal Department of Public Works for local streets. The existing brick or cobblestone shall be removed manually from within the limits required for trench excavation as approved by the Owner. The existing brick or cobblestone shall be cleaned of all extraneous matter and washed for re-use. The Contractor shall carefully stockpile and protect the existing brick or cobblestone until such time that the brick or cobblestone is required for the final restoration. Whereupon it is determined in the field that the existing bricks or cobblestones, or a portion thereof, are damaged and not suitable for re-use, the Contractor shall furnish new bricks or cobblestones to satisfactorily complete the restoration.

6.12.2 The brick or cobblestone shall be placed and arranged in the same pattern as the adjacent brick or cobblestone areas. The subgrade shall be excavated sufficiently to allow for placement of a 2-inch deep sand or stone dust base matching the existing base, which shall be uniformly graded and compacted prior to placement of the bricks. Unless otherwise directed, the final brick or cobblestone surface restoration shall match the longitudinal and transverse grades of the existing pavement, and the bricks or cobblestones shall be neatly placed and arranged to match and interlock with the existing pattern. Upon completion of the placement of bricks, the restored area shall be swept with sand or stone dust to fill the joints of the brick. The work area shall then be cleaned of all residual sand, stone dust, or other soil spillage.

END OF SECTION

SECTION 08100

INFRARED BITUMINOUS PAVEMENT RESTORATION

SECTION 08100
INFRARED BITUMINOUS PAVEMENT RESTORATION

PART 1 GENERAL

1.1 INCLUSIONS & DESCRIPTION OF WORK

A. Products, procedures, and equipment to provide a seamless repair of bituminous pavement by the application of evenly distributed infrared heat to aid in the reworking and remixing of the existing asphalt mix.

B. Work consists of furnishing the labor, materials and equipment required to blend new bituminous material with infrared heated existing material to form a joint free integral mix. This special provision is for locations as indicated on the design plans or as directed by the Engineer.

1. New pavement in streets shall consist of Class 9.5 (Marshall Mix: Class I, Type I-1) bituminous concrete pavement placed over trenches as outlined below.

2. For non-state-owned roads, at a minimum, the restored pavement thickness shall match the existing depth of the roadway, or equal four (4) inches, whichever is greater, unless directed otherwise by the Owner. For state-owned roads, at a minimum, the restored pavement thickness shall match the existing depth of the roadway, or equal six (6) inches, whichever is greater.

3. After a 60-day settlement period, permanent pavement shall consist of infra-red treatment of the initial pavement as specified herein.

4. Driveway, parking area, or sidewalk pavements damaged or disturbed by the Contractor's operations shall be repaired, restored, or replaced (at the contractor's expense) in accordance with the requirements specified in Section 8000 or as directed by the Owner.

1.2 REFERENCES

A. ASTM D4552 – Standard Practice for Classifying Hot-Mix Recycling Agents
B. RIDOT Standard Specifications for Road and Bridge Design
C. AASHTO M140 – Standard Specification for Emulsified Asphalt
D. AASHTO M208 – Standard Specification for Cationic Emulsified Asphalt

1.3 DEFINITIONS

A. Virgin HMA: Virgin Hot Mix Asphalt picked up from an asphalt plant

B. Hotbox: Temperature controlled container for transporting HMA at its required temperature

C. PRV: Pavement Restoration Vehicle

D. ARA: Asphalt Rejuvenator Agent, a petroleum product additive that falls under the one of the recycling agent groups outlined in ASTM D4552.

E. Maltene: The oily, resinous component of asphalt that remains when the dark organic constituents of crude oils and bitumen (asphaltenes) are removed.

F. Asphalt Lute: Rakes designed to smooth and level fresh asphalt aggregate prior to compaction.

1.4 SAFETY

A. Proper safety precautions shall be taken including traffic cones, signage, and flagmen (if necessary) to insure a safe workplace for workers, pedestrians, and automobile traffic.

1.5 SUBMITTALS

A. Upon request, the Contractor shall provide manufacturer's product data, equipment specifications and material specifications.

1.6 ACCEPTANCE

A. Repair area to match existing grade, be tightly compacted, have a skid resistant surface, and tightly bonded to the existing adjacent pavement. Tightly bonded is defined as thermally, chemically reconstructed where the resulting pavement is continuous without seams.

B. The patch should provide a seamless transition to the surrounding undamaged pavement.

PART 2 PRODUCTS AND EQUIPMENT

2.1 MATERIALS

A. Hot Mix Asphalt Pavement (HMA) uniformly mixed and well graded. The Contractor shall maintain records to be given to the Owner upon request of the plant that supplied the HMA and of the gradation and Superpave binder grade (in accordance with RIDOT Standard Specifications) that is utilized in the Infrared Pavement Repair process.

1. Aggregate size for Wearing Course as prescribed by RIDOT shall conform to Class 9.5 (Marshall Mix: Class I, Type I-1) 9.5 mm maximum, well-graded aggregate.

2. From pick up through placement, the Contractor shall conduct and record periodic temperature checks of the Virgin HMA in its hotbox to ensure the temperature does not fall below 250ºF or exceed 300ºF. This documentation shall be provided to the Owner upon request.

B. Asphalt Rejuvenator Agent (ARA) shall be a petroleum product additive that falls under one of the recycling agent (RA) groups outlined in ASTM D4552.

1. The Contractor shall apply a one-component emulsified maltenes recycling agent (rejuvenator) in a ratio of 1:1 with water.

2. The rejuvenator application area shall include both the area under repair as well as the area heated but left undisturbed around the perimeter of the repair.

3. The application shall take place after the area has been scarified and just prior to the addition of new asphalt. The rejuvenator replaces the light oil component of asphalt which has oxidized out over time.

C. Tack Coat/Sealant shall be emulsified asphalt with the same asphaltic cement as the HMA pavement mix placed, SSI or equal. In accordance with requirements of AASHTO M140/M208 and Section 403 of RIDOT Standard Specifications.

D. Stone dust, for the cover material shall be free from dirt, organic material, clay balls and film, dust or other objectionable matter, and shall be suitable for the intended use as approved by the Engineer.

2.2 EQUIPMENT

A. PRV and Hotbox: Pavement Restoration Vehicle (PRV) shall be a truck mounted, self-contained pavement maintenance heating system (Hotbox) equipped with a fuel system and a heated chamber capable of maintaining the fresh asphalt at a temperature of 250-300ºF. The Hotbox storage unit shall be utilized to ensure that sufficient hot virgin asphalt is on hand. This unit must ensure that the temperature of the asphalt is never in excess of 325 degrees Fahrenheit.

B. Infrared Heater: The adjustable height infrared heating unit may be truck or trailer mounted to the PRV. The unit shall be equipped with a chamber or chambers capable of heating the existing bituminous pavement to a workable condition without oxidation or burning. There shall be no flame in direct contact with the existing bituminous surface.

   1. The heating chamber used shall consume no more than 12,500 BTU per square foot of heated area. This rate of consumption shall translate into the ability of the heater to soften asphalt to a depth of 1½ -2½ inches in 8-10 minutes without burning the surface.

C. Commercial Grade Sprayer: The sprayer for the asphalt rejuvenator agent (ARA) shall deliver the ARA with a fan spray ensuring equal and uniform coverage of the heated. The sprayer shall have a clear tank with measurement markings on the side or a fluid gauge to determine the amount of ARA used.

D. Steel Rake: A steel rake shall be used to delineate the repair area along the chalk line and to scarify the heated area of the patch inside the chalk line to a depth of at least 2 inches.

E. Asphalt Lute: A 36-inch wide lute shall be used to evenly distribute the added asphalt and to establish the proper grade.

F. Tandem Ride-on Vibratory Roller: Compaction shall be achieved with a tandem ride-on 1.25 Ton (min) Vibratory Roller.

PART 3 EXECUTION

3.1 MARK AND MEASURE REPAIR AREA

A. Identify, mark, and measure the specific area to be repaired in coordination with the Owner’s representative (Inspector).

   1. A chalk line shall be drawn a minimum of 6" beyond the original temporary patch limits, unless otherwise directed by Providence Water.

3.2 ENVIRONMENTAL REQUIRMENTS

A. The Contractor shall ensure that asphalt is not placed in the rain or in wet conditions. In high wind conditions a metal wind shield that extends ¾ the way around the outside of the heater is to be used to minimize convective heat losses.

B. When the air temperature falls below 50 degrees F, extra precautions shall be taken in drying the aggregates, controlling the temperatures of the materials, placing and compacting the mixtures.

C. No mixtures shall be placed when the air temperature is below 40 degrees F unless authorized in writing by the Owner.

D. No mixtures shall be placed when the material on which the mixtures are to be placed contains frost or has a surface temperature not suitable to the Owner.

3.2 CLEAN REPAIR AREA

A. Thoroughly sweep, air blow, or hose the general area to be repaired to remove dirt, debris, loose aggregate or standing water. Use moisture for dust control as needed to prevent reduced sight distance for traffic.

3.3 CONSTRUCTION

A. Heat area to be repaired to a sufficient temperature using infrared heat to allow remixing of the asphalt without oxidation or burning.

1. The heater shall be lowered to within 10-14 inches of the existing pavement, centered over the existing temporary patch with at least 6” of heated area beyond the perimeter of the original opening (as delineated with the chalk outline).

2. Do not exceed a surface temperature of 350º F. Measurement shall be conducted with a temperature probe or infrared temperature gun provided by the contractor. If the temperature is exceeded additional material shall be removed.

3. Heating is sufficient when the existing asphalt can be worked with a rake to a depth of 2 inches (typically 8-10 minutes).

B. After heating no less than the top ¼ - ½” of asphalt shall be removed to take away any charred material. If the surface temperature exceeds 350ºF as mentioned in section

3.3.A.2, another ½" of material shall be removed for every 100ºF over.

C. ARA shall be uniformly sprayed to the surface of the heated asphalt with a fan nozzle at a rate of 0.1-0.5 gallons per square yard. The color of the ARA will be used to help assess adequate coverage.

D. Using a hand rake or mechanical tiller, scarify and thoroughly mix the repair area to depth of 2 inches. Add additional virgin HMA as necessary. As required, the Contractor shall add the Superpave Class 9.5 (Marshall Mix Class 1 Type I-1) surface coarse asphalt mix.

   1. When placing additional HMA the temperature shall not fall below 225 degrees F during placement.

E. Reshape repair area by hand (luting) to match grade of adjacent pavement.

F. Compact the surface with a tandem 1.25 ton (min) ride-on vibratory roller. The surface should be smooth, tight, and matching the grade of the adjacent pavement.

   1. The outside perimeter shall be compacted first in order to ensure a full thermal bond with the existing heated pavement.

   2. If greater than 2 inches of asphalt is to be compacted, multiple lifts should be placed and compacted.

   3. If evidence of asphalt shoving occurs during compaction the vibratory compactor shall be operated in static mode or the pavement shall be allowed to cool for a slight amount of time before compaction resumes.

   4. The temperature of the asphalt shall not fall below 175 degrees F during compaction. Temperature at compaction shall be recorded by the Contractor.

G. At the direction of OWNER, stone dust or fine sand may be applied to reduce the tackiness of the patch. Sand should be evenly distributed over the surface to fill small voids and absorb excess sealant if surface sealant is applied.

H. The total time for a typical single heat restoration should be no more than 20-25 minutes. This timeframe shall be strictly adhered to so as to ensure that both the heated pavement and added asphalt have not been allowed to cool significantly. This provides the proper fusion between the repair and the existing road surface.

3.4 WARRANTY AND QUALITY ASSURANCE

A. The Contractor shall warrantee the infrared patches for a 5-year period starting from the date of acceptance. Within the 5-year period, the Contractor will be held responsible for maintaining the final restoration work and repair any failures at no expense to the OWNER.

B. Failure to meet the warranty requirements constitutes a breach of contract.

C. Failure is defined as the following:
   1. Greater than 5% cracking in the repaired area within 12 months
   2. Greater than 5% raveling of material from the repaired area within 12 months
   3. Rutting more than ½" within 12 months
   4. Not providing a seamless repair

3.5 FINAL CLEAN UP

A. Clean-up site after paving. Remove and dispose all excess material and debris resulting from repair operation.

3.6 OPEN TO TRAFFIC

A. Allow the repaired area to cool to 175ºF before opening to traffic. Measurement shall be conducted with an infrared temperature gun.

B. No vehicular traffic or loads shall be permitted on the newly completed pavement until adequate stability has been attained and the material has cooled sufficiently to prevent distortions or loss of fines. If the climatic or other conditions warrant it, the period of time before opening to traffic may be extended at the discretion of OWNER.

END OF SECTION

SECTION 08200

COLD PLANE / MICRO-MILL BITUMINOUS PAVEMENT RESTORATION

SECTION 08200
COLD PLANE / MICRO-MILL
BITUMINOUS PAVEMENT RESTORATION

PART 1 GENERAL

1.1 DESCRIPTION OF WORK

A. Work shall generally include traffic control (i.e., signage, flaggers, police details as needed), utility coordination, removal of existing pavement, cleaning of surface, adjustment of existing structures to finish grade, replacement of new pavement, installation of pavement markings, and installation of loop detectors for all roadway segments within the Work Area.

B. Unless otherwise noted, Work to be performed shall be in accordance with the Rhode Island Department of Transportation Standard Specifications for Road and Bridge Construction, as amended with revisions. Work shall include all materials, tools, labor, equipment, and all other incidentals required to finish all work, complete-in-place and accepted by the OWNER.

C. Micro-Milling shall be performed in accordance with Section 935 of the RIDOT Standard Specifications.

D. This special provision is for locations as indicated on the design plans or as directed by the OWNER.

1. New pavement in streets shall consist of Class 9.5 (Marshall Mix: Class I, Type I-1) bituminous concrete pavement placed over trenches as outlined below.

2. For state-owned roads, at a minimum, the restored pavement thickness shall match the existing depth of the roadway, or equal six (6) inches, whichever is greater. For non-state-owned roads, at a minimum, the restored pavement thickness shall match the existing depth of the roadway, or equal four (4) inches, whichever is greater.

3. After a 60-day settlement period, permanent pavement restoration shall be accomplished by micro-milling the existing bituminous concrete pavement at a 2" depth; followed by a 2" overlay of wearing coarse bituminous concrete, delineated above. The limits and locations of micro-milled road sections shall be determined by the OWNER.

4. Driveway, parking area or sidewalk pavements damaged or disturbed by the Contractor's operations shall be repaired, restored or replaced (at the Contractor's expense) in accordance with the requirements specified in Section 8000 or as directed by the OWNER.

SECTION 08200
COLD PLANE / MICRO-MILL
BITUMINOUS PAVEMENT RESTORATION

1.2 REFERENCES

A. RIDOT Standard Specifications for Road and Bridge Design

B. AASHTO M140 – Standard Specification for Emulsified Asphalt

C. AASHTO M208 – Standard Specification for Cationic Emulsified Asphalt

1.3 DEFINITIONS

A. Work Area: The Work Area shall consist of those roadways determined by the OWNER that will be permanently restored via a micro-mill and overlay.

B. Micro-milling: Micro-milling shall consist of the cold milling of existing asphalt concrete pavement with a milling machine equipped with a cutting drum specifically designed and constructed for micro-milling.

1.4 SAFETY

A. Proper safety precautions shall be taken including traffic cones, signage, and flagmen (if necessary) to insure a safe workplace for workers, pedestrians, and automobile traffic.

1.5 SUBMITTALS

A. Upon request, the Contractor shall provide manufacturer's product data, equipment specifications and material specifications.

1.6 GENERAL REQUIREMENTS

1.6.1 UTILITY & COMMUNITY COORDINATION

A. All contractors are required to notify OWNER of work location and when not working due to weather, daily.

B. The Contractor shall use care when working in or within the vicinity of existing drainage structures and underground utilities. The Contractor shall check and verify the location of all existing utilities and service connections both underground and overhead in accordance with Dig Safe.

C. No excavation or roadway work shall be done until all involved utility companies and Dig Safe are notified 72 hours in advance. The Contractor should be aware that not all utility companies subscribe to the Dig Safe Program.

D. It is the Contractor's responsibility to ensure that all utility companies have been notified and all utilities have been marked prior to commencing their work. Any damage to existing utilities marked in the field, or as a result of failing to contact the appropriate utility company, shall be repaired or replaced at no additional cost to the OWNER.

E. The Contractor shall contact Dig Safe (1-888-344-7233) prior to construction.

F. All contractors are required to coordinate with local businesses, property owners, and tenants that may be effected by paving.

G. All contractors will be required to obtain a hydrant meter and backflow from the OWNER for any water use while paving. Pertinent PW policies, procedures, and requirements apply.

1.6.2 SITE CONDITIONS & UTILITY STRUCTURES

A. The Contractor shall make every effort to prevent debris from falling into catch basins or any utility structure. The Contractor is required, at no additional cost, to employ storm drain inlet protection measures (ie. hay bales or filter socks). Should any debris fall inside a structure, it shall be removed immediately by the Contractor.

B. No portions of the shoulders or sidewalks are to be used for storage for construction equipment and/or material.

C. The Contractor shall take adequate precautions to avoid unnecessary damage to pavements, utilities, or private properties. The Contractor shall promptly repair (in kind), at his own expense, any damage attributed to his work to such pavements, utilities, or private property to the satisfaction of the OWNER.

D. The Contractor shall provide for adequate protection of exposed utility structures to prevent vehicle damage or claims after completion of the micro milling work and maintain such protection in place until the final pavement work has been completed.

E. The Contractor shall provide adequate signage on exposed roadways and shall paint the exposed edges of structures with a highly visible fluorescent color.

F. The Contractor shall be responsible for all claims and/or damages resulting from exposed utility structures.

G. A self-loading motorized street sweeper equipped with both brooms and a vacuum system, and a functional water spray system shall immediately follow the milling machine. Millings, excess pavement waste, etc. and shall not be allowed to flow across the pavement nor be left on the surface of the pavement.

H. All removed material, i.e. millings, excess pavement waste, etc., shall be considered the property of the Contractor and shall be disposed of by the Contractor. The Contractor shall notify the OWNER prior to the start of milling operations of the disposal location.

1.6.3 ADJUSTMENTS OF UTILITY APPURTENANCES TO GRADE

All valve boxes, curb stops, manhole frames and covers, catch basin frames and grates which are disturbed by construction operations shall be reset and adjusted, at no additional expense to the OWNER, to grade at the elevation of the final pavement in accordance with the specified procedures of the appropriate utility.

1.6.4 PAVEMENT MARKINGS

A. After final paving, as well as before permanent pavement markings are installed, Contractor shall install temporary waterborne reflectorized pavement markings, placed in the same locations as original markings, on any roadways opened to traffic at the completion of any day's paving operation.

B. Final epoxy resin pavement markings (or approved equal) shall be placed on the final pavement surface course no sooner than 14 calendar days but no later than 28 calendar days from the completion of the paving operation for each road.

C. Prior to commencing the work, it will be the Contractor's responsibility to accurately record the locations of all the existing pavement markings, where applicable, including stop bars, edge lines, parking stalls, centerlines, arrows, dash markings, and other surface markings in order to replicate those markings onto newly finished surfaces. The Contractor shall make the necessary arrangement to enable him to re-establish these locations and new limits of pavement marking before any milling and overlay commences.

D. All epoxy resin pavement markings (or approved equal) are to be in accordance with Section T20 of the RIDOT Standard Specifications and shall conform to the requirements of the Manual on Uniform Traffic Control Devices, 2009 Edition, including all revisions.

E. Payment for all epoxy resin pavement markings (or approved equal) shall be included as part of the unit rate bid for Micro-Milling and considered to be incidental to the work.

1.6.5 LOOP DETECTOR REPLACEMENT

A. All traffic signal loop detectors within the project limits that are removed by the pavement milling operations shall be replaced in-kind as part of unit rate bid for Micro-Milling.

B. Prior to commencing milling of the intersection pavement, the Contractor shall coordinate with the individual City or Town's Traffic Engineer or DPW.

C. These loop detectors shall be replaced in accordance with the "RIDOT Standard Detail 19.6.0." Any loop detectors impaired as a result of mill and overlay operations or the resurfacing of an existing roadway shall be replaced no later than 7 calendar days from the completion of the paving operation for each road. When existing detection is rendered non-functional by the Permittee's operations for any other reason, the Permittee shall restore properly operating detection within seventy-two (72) hours.

1.6.6 ACCEPTANCE

A. Ensure that the micro-milling operation produces a uniform pavement texture that is true to line, grade, and cross section.

B. Micro-milled pavement surfaces are subject to visual and straightedge inspections. Keep a 12 ft. straightedge near the micro-milling operation to measure surface irregularities of the milled pavement surface.

C. Micro-milling shall result in a grid-patterned textured pavement surface with longitudinal ridges approximately the same distance apart as the cutting teeth. The ridges shall be consistent in depth, width, and profile. The distance between the top of each ridge and the adjacent valleys shall not exceed 1/8 inch.

1. If any areas exceed 1/8 inch between the ridge and valley of the mat surface, the Contractor shall remove the underlying layer and replace it with material as directed by the OWNER at no additional cost.

2. During milling operations, the cutter teeth shall be regularly checked and replaced as necessary.

D. The resulting profile and cross slope of the milled pavement surface shall be such that a 12 ft. long straightedge laid perpendicular or parallel to the centerline will not allow a shim with a width of 1 inch and a thickness of 3/16 inch to pass under the straightedge at any point except at breaks in profile grade or cross slope.

E. Milled pavement surfaces which do not conform to the requirements above shall be corrected by the Contractor at no additional cost. Prior to initiating corrective action, the Contractor shall prepare and submit a correction plan to the OWNER for approval.

PART 2 PRODUCTS AND EQUIPMENT

2.1 MATERIALS

A. Hot Mix Asphalt Pavement (HMA) uniformly mixed and well graded. The Contractor shall maintain records to be given to the OWNER upon request of the plant that supplied the HMA and of the gradation and Superpave binder grade (in accordance with RIDOT Standard Specifications) that is utilized in the Pavement Repair process.

1. Aggregate size for Wearing Course as prescribed by RIDOT shall conform to Class 9.5 (Marshall Mix: Class I, Type I-1) 9.5 mm maximum, well-graded aggregate.

2. From pick up through placement the Contractor shall conduct and record periodic temperature checks of the Virgin HMA in its hotbox to ensure the temperature does not fall below 250ºF or exceed 300ºF. This documentation shall be provided to the OWNER upon request.

3. Tack Coat/Sealant shall be emulsified asphalt with the same asphaltic cement as the HMA pavement mix placed, SSI or equal. In accordance with requirements of AASHTO M140/M208 and Section 403 of RIDOT Standard Specifications.

2.2 EQUIPMENT

A. Use power-driven, self-propelled micro-milling equipment that is the size and shape that allows traffic to pass safely through areas adjacent to the work.

Also, use equipment that is:

1. Equipped with a cutting mandrel with carbide tipped cutting teeth designed for micro-milling bituminous pavement to close tolerances

2. Equipped with grade and slope controls operating from a stringline or ski and based on mechanical or sonic operation

3. Capable of removing pavement to an accuracy of 1/16 inch

4. Furnished with a lighting system for night work, as necessary

5. Provided with conveyors capable of side, rear, or front loading to transfer the milled material from the roadway to a truck

B. Rollers shall be steel wheel rollers weighing between 126 and 172 pounds per linear inch of drum width equipped with an operating water spray and scraper system.

C. The spreading and finishing machine shall be equipped with a fully automatic screed control system which shall be in operation at all times during placement of the surface course. The system shall be either a contact (skid) or non-contact (sonic averaging) system. The skid shall be mounted on the side of the spreading and finishing machine which will receive the next mat of material, placed in contact with the pavement surface. The sonic averaging system shall have a ski, mounted on the side of the spreading and finishing machine which will receive the next mat of material. A joint maker placed on the side of the spreading and finishing machine to ride on the existing or previously constructed surface or mat of material may be required as directed by the Engineer.

PART 3 EXECUTION

3.1 MARK AND MEASURE REPAIR AREA

A. Identify, mark and measure the specific area to be repaired in coordination with the OWNER's representative (Inspector).

3.2 ENVIRONMENTAL REQUIRMENTS

A. The Contractor shall ensure that asphalt is not placed in the rain nor in wet conditions.

B. When the air temperature falls below 50 degrees F, extra precautions shall be taken in drying the aggregates, controlling the temperatures of the materials, placing and compacting the mixtures.

C. No mixtures shall be placed when the air temperature is below 40 degrees F unless authorized in writing by the OWNER.

D. No mixtures shall be placed when the material on which the mixtures are to be placed contains frost or has a surface temperature not suitable to the OWNER.

3.3 CLEAN REPAIR AREA

A. The entire roadway pavement surface to be resurfaced shall be thoroughly cleaned, giving specific attention to accumulated mud and debris. Pressurized water and/or vacuum systems may be required to ensure a clean surface.

3.4 CONSTRUCTION

A. MILLING OPERATIONS

1. Clean existing pavement surface of loose and deleterious material immediately before cold milling.

2. Milling operations shall progress from the low side of each roadway barrel or lane and progress towards the high side. Each successive pass of the milling machine shall meet the line and grade of the previous pass. The speed of the milling machine shall be maintained at a rate which results in a uniform pavement texture.

3. Mill to a depth of 2 inches to a uniform finished surface free of excessive gouges, grooves, and ridges.

4. Control rate of milling to prevent tearing of existing asphalt course.

5. Repair or replace curbs, manholes, and other construction damaged during cold milling, at no additional expense.

6. Excavate and trim unbound-aggregate base course, if encountered, and keep material separate from milled hot-mix asphalt.

7. Patch surface depressions deeper than 1 inch after milling, before wearing course is laid.

8. Traffic must be maintained on the milled surface prior to the placement of the new asphalt concrete, provide suitable transitions between areas of varying thickness to create a smooth longitudinal riding surface. Produce a pattern of striations that will provide an acceptable riding surface.

9. Prior to opening an area which has been milled to traffic, sweep the pavement with self-loading motorized street sweeper to remove, to the greatest extent practicable, fine material which will create dust under traffic. Sweep in a manner that will minimize the potential for creation of a traffic hazard and to minimize air pollution.

10. Asphalt shall be placed within five (5) business days, or as otherwise directed by OWNER, following milling operations.

B. **PLACING HOT MIX ASPHALT**

1. Asphalt Emulsion Tack Coat shall be applied on the micro milled surface, between asphalt layers and on exposed cross-sections of adjacent roadways.

2. Machine place hot-mix asphalt on prepared surface, spread uniformly, and strike off. Place asphalt mix by hand in areas inaccessible to equipment in a manner that prevents segregation of mix. Place each course to required grade, cross section, and thickness when compacted.

3. Spread mix at a minimum temperature of 250 degrees F.

4. Begin applying mix along centerline of crown for crowned sections and on high side of one-way slopes unless otherwise indicated.

5. Regulate paver machine speed to obtain smooth, continuous surface free of pulls and tears in asphalt-paving mat.

6. Place paving in consecutive strips not less than 10 feet wide unless infill edge strips of a lesser width are required.

    a. After first strip has been placed and rolled, place succeeding strips and extend rolling to overlap previous strips. Overlap mix placement about 1 to 1-1/2 inches from strip to strip to ensure proper compaction of mix along longitudinal joints.
    b. Complete a section of asphalt base course before placing asphalt surface course.

7. Promptly correct surface irregularities in paving course behind paver. Use suitable hand tools to remove excess material forming high spots. Fill depressions with hot-mix asphalt to prevent segregation of mix; use suitable hand tools to smooth surface.

C. **JOINTS**

1. Construct joints to ensure a continuous bond between adjoining paving sections. Construct joints free of depressions, with same texture and smoothness as other sections of hot-mix asphalt course.

2. Clean contact surfaces and apply tack coat to joints.

3. Offset longitudinal joints, in successive courses, a minimum of 6 inches.

4. Offset transverse joints, in successive courses, a minimum of 24 inches.

5. Construct transverse joints at each point where paver ends a day's work and resumes work at a subsequent time. Joints between old and new pavements, or between successive days' work, shall be carefully made in such a manner as to insure a thorough and continuous bond between the old and new surfaces.

6. The edge of the old pavement, or previously placed new pavement, shall be cut back a sufficient distance to expose a fresh, full thickness, vertical face. To obtain a well bonded joint, this face shall be brush-painted or pressure sprayed with a bituminous tack coat, after which the hot bituminous mixture shall be placed in contact with it.

7. Compact joints as soon as hot-mix asphalt will bear roller weight without excessive displacement.

8. Compact asphalt at joints to a density within 2 percent of specified course density.

D. **COMPACTION**

1. General: Begin compaction as soon as placed hot-mix paving will bear roller weight without excessive displacement. Compact hot-mix paving with hot, hand tampers or with vibratory-plate compactors in areas inaccessible to rollers.

   a. Complete compaction before mix temperature cools to 175 degrees F.

2. Breakdown Rolling: Complete breakdown or initial rolling immediately after rolling joints and outside edge. Examine surface immediately after breakdown rolling for indicated crown, grade, and smoothness. Correct laydown and rolling operations to comply with requirements.

3. Intermediate Rolling: Begin intermediate rolling immediately after breakdown rolling while hot-mix asphalt is still hot enough to achieve specified density. Continue rolling until hot-mix asphalt course has been uniformly compacted to the following density:

   a. Average Density: 96 percent of Marshall density as determined at the plant, according to RIDOT Specifications. Density shall be attained before the temperature of the surface falls below 175 degrees F.

4. Finish Rolling: Finish roll paved surfaces to remove roller marks while hot-mix asphalt is still warm.

5. Edge Shaping: While surface is being compacted and finished, trim edges of pavement to proper alignment. Bevel edges while asphalt is still hot; compact thoroughly.

6. Repairs: Remove paved areas that are defective or contaminated with foreign materials and replace with fresh, hot-mix asphalt. Compact by rolling to specified density and surface smoothness.

7. Protection: After final rolling, do not permit vehicular traffic on pavement until it has cooled and hardened.

8. Erect barricades to protect paving from traffic until mixture has cooled enough not to become marked.

3.5 WARRANTY AND QUALITY ASSURANCE

A. The Contractor shall warrantee the resurfaced roadway for a 5-year period starting from the date of acceptance. Within the 5-year period, the Contractor will be held responsible for maintaining the final restoration work and repair any failures at no expense to the OWNER.

B. Failure to meet the warranty requirements constitutes a breach of contract.

3.6 FINAL CLEAN UP

A. Clean-up site after paving. Remove and dispose all excess material and debris resulting from repair operation.

3.7 OPEN TO TRAFFIC

A. Allow the repaired area to cool to 175ºF before opening to traffic. Measurement shall be conducted with an infrared temperature gun.

B. No vehicular traffic or loads shall be permitted on the newly completed pavement until adequate stability has been attained and the material has cooled sufficiently to prevent distortions or loss of fines. If the climatic or other conditions warrant it, the period of time before opening to traffic may be extended at the discretion of the OWNER.

END OF SECTION

WATER MAIN REHABILITATION

UPPER SOUTH PROVIDENCE (PLAIN ST.)

PROVIDENCE, RI

CONTRACT NUMBER:
CONTRACT 4-21

ISSUED FOR BID:
JULY 13, 2020

DRAWING TYPE:
BID DOCUMENT

CITY OF PROVIDENCE
WATER SUPPLY BOARD

THE HONORABLE JORGE O. ELORZA
MAYOR

XAYKHAM KHAMSYVORAVONG
CHAIRPERSON

MICHAEL J. CORREIA
COUNCIL PRESIDENT PRO TEMPORE

SARA SILVERIA
EX-OFFICO

DR. ALMA M. GUERRERO BREADY
MEMBER

WILLIAM E. O'GARA, ESQ.
LEGAL ADVISOR

RICKY CARUOLO
GENERAL MANAGER

JOSEPH D. CATALDI
VICE CHAIRPERSON

JO-ANN RYAN
COUNCILPERSON

CRISTEN L. RAUCCI, ESQ.
MEMBER

CARISSA R. RICHARD
SECRETARY

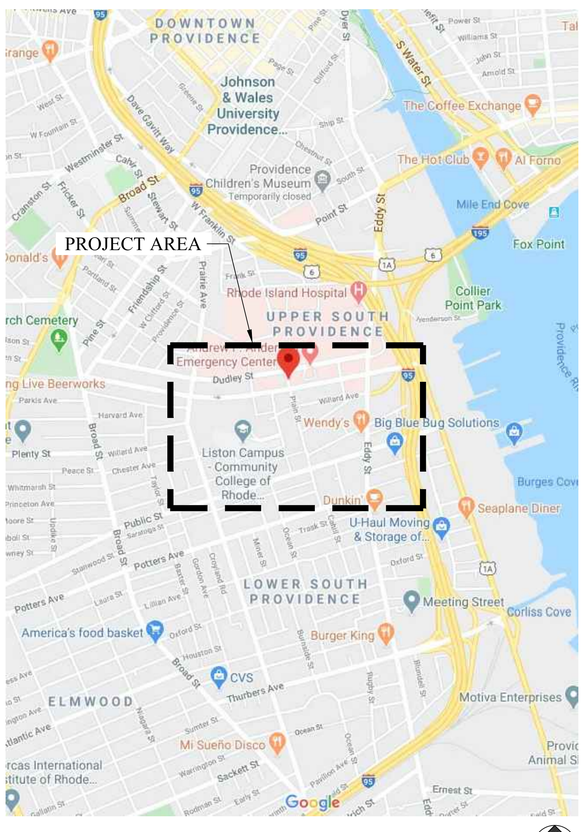

VICINITY MAP

NOT TO SCALE
MAP SOURCE: GOOGLE, (2020)

CONTRACT NOTES

1. CONTRACTOR SHALL REVIEW ALL EXISTING AS-BUILT DOCUMENTATION AND VERIFY ALL EXISTING CONDITIONS IN THE FIELD.
2. UNLESS OTHERWISE NOTED, EXISTING 6", 8" & 12" CAST-IRON WATER MAIN AS INDICATED SHALL BE CLEANED & CEMENT-MORTAR LINED WITHIN THE LIMITS OF WORK ALONG THE RESPECTIVE STREETS.
3. SELECT SECTIONS OF THE EXISTING CAST-IRON WATER MAINS SHALL BE REMOVED AND REPLACED WITH NEW DUCTILE IRON (DI) WATER MAIN AS SHOWN ON DRAWINGS. SIZES SHALL BE IDENTICAL TO EXISTING CONDITIONS UNLESS OTHERWISE NOTED.
4. ALL APPURTENANCES (VALVES, TEES, HYDRANTS, ETC.) SHALL BE REMOVED & REPLACED AS INDICATED ON DRAWINGS INCLUDING ALL COUPLINGS, RESTRAINTS, HARDWARE, ETC.
5. ALL PIPE, COUPLINGS, SLEEVES, FITTINGS, HARDWARE, ETC. INSTALLED UNDER THIS PROJECT SHALL BE NEW. ANY EXISTING COUPLINGS, SLEEVES, HARDWARE, ETC. REMOVED FOR NEW CONNECTIONS TO EXISTING FEATURES SHALL BE REPLACED.
6. ALL EXISTING LEAD SERVICES SHALL BE REPLACED WITH NEW COPPER SERVICES. SERVICE SIZE SHALL MATCH EXISTING. EXISTING LEAD SERVICES LESS THAN 1" SHALL BE REPLACED WITH 1" COPPER.
7. ALL CAST IRON SERVICES WHERE NOTED ON THE DRAWINGS SHALL BE REPLACED TO THE PROPERTY LINE UNLESS OTHERWISE NOTED.
8. SERVICES FOUND CLOSED AT CURB STOP ARE TO BE LEFT IN CLOSED POSITION.

SHEET INDEX

SHEET NO.	SHEET NAME
1	COVER SHEET
2	KEY MAP
3	AREA 1 PLAN
4	AREA 2 PLAN
5	AREA 3 PLAN
6	AREA 4 PLAN
7	AREA 5 PLAN
8	AREA 6 PLAN

LEGEND

EXISTING CONDITIONS

- PROPERTY LINE
- CURB LINE/ROAD
- X" XX (SIZE & TYPE; MAIN LINE; SERVICE LINES) — INFRASTRUCTURE TO REMAIN
- 102 (HOUSE NO.) 1" (DIAMETER) COPPER (& TYPE) — SERVICE LINE INFORMATION
- GATE — VALVES TO REMAIN
- PIPE STUB WITH CAP
- BLOWOFF WITH CAP TO REMAIN
- AIR RELEASE TO REMAIN
- LS — MAIN LINE - LOW SERVICE TO REMAIN
- HYD. NO. — HYDRANT TO REMAIN

ABBREVIATIONS

AC	ASBESTOS CEMENT
CI	CAST IRON
CNU	CLOSED-NON USE
DI	DUCTILE IRON
UNK	UNKNOWN

CONTRACT WORK

- 96 1" LEAD — LEAD SERVICE LINE TO BE REMOVED, REPLACE PER SPEC
- CNU 122 3/4" COPPER CNU — OTHER SERVICE LINE TO BE REMOVED
- HYDRANT NO. REPLACE — HYDRANT ASSEMBLY TO BE REPLACED
- VALVE NO. REPLACE — GATE VALVE TO BE REPLACED
- REPLACE W/ X" — BLOWOFF WITH CAP TO BE REPLACED, SIZE PER PLAN
- EX. SIZE & TYPE X" XX - C&L — WATER MAIN TO BE CLEANED AND LINED (C&L)
- EX. SIZE & TYPE X" XX - ABANDON — MAIN LINE TO BE ABANDONED
- DUCTILE IRON WATER MAIN, SIZE TO MATCH EX. CONDITIONS
- VALVE NO. INSTALL X" — GATE VALVE, SIZE PER PLAN
- SIZE" — MECHANICAL COUPLING, SIZE PER PLAN
- TEE, SIZE TO MATCH EXISTING CONDITIONS
- CROSS, SIZE TO MATCH EXISTING CONDITIONS
- HORIZONTAL BEND, SIZE TO MATCH EXISTING CONDITIONS
- THRUST BLOCK (TB)
- REDUCER

GENERAL NOTES

1. CONTRACT PLANS ARE DRAWN TO SCALE, HOWEVER ALL SYMBOLOGY SHOWN ON DRAWINGS ARE FOR DIAGRAMMATIC PURPOSES ONLY AND ARE NOT TO SCALE.
2. EXISTING UTILITIES ARE SHOWN FOR REFERENCE ONLY. ALL UTILITIES MAY NOT BE SHOWN. CONTRACTOR SHALL NOTIFY "DIG-SAFE" PRIOR TO COMMENCING WORK.
3. NEW WATER MAINS SHALL BE TESTED AND CHLORINATED IN ACCORDANCE WITH PROVIDENCE WATER STANDARDS AND AS DIRECTED BY PROVIDENCE WATER.
4. PROVIDENCE WATER MUST BE NOTIFIED A MINIMUM OF 72 HOURS IN ADVANCE OF ANY SERVICE INTERRUPTION.
5. ALL MATERIALS USED IN CONSTRUCTION, REPAIR OR MAINTENANCE OF THE WATER SYSTEM SHALL MEET THE APPROVAL OF PROVIDENCE WATER. AN APPROVED LIST OF MATERIALS AND MANUFACTURERS IS PROVIDED IN THE SPECIFICATIONS.
6. NEW WATER MAINS SHALL BE CEMENT-LINED ZINC-COATED CLASS 52 DUCTILE IRON PIPE CONFORMING TO THE LATEST AWWA STANDARDS. (HIGH SERVICE MAINS WITHIN METRO PROVIDENCE AREA TO BE CL56 DI).
7. PIPE FITTINGS SHALL BE CEMENT-LINED ZINC-COATED COMPACT DUCTILE IRON, CLASS 350 (AWWA C153), WITH MECHANICAL JOINT ENDS.
8. ALL MECHANICAL JOINTS SHALL BE FURNISHED WITH MECHANICAL JOINT RESTRAINTS PLACED ON EACH SIDE OF IN-LINE FITTINGS. ALL PIPE JOINTS PRIOR TO END CAPS AND CHANGES IN PIPE DIRECTION SHALL BE RESTRAINED IN ACCORDANCE WITH PROVIDENCE WATER STANDARDS.
9. ALL RESTRAINING RODS & BOLTS, WHEN USED, MUST BE COATED WITH SPRAY BITUMINOUS COATING.
10. UNLESS OTHERWISE NOTED, EARTH COVER OVER PIPE SHALL NOT BE LESS THAN 4.5 FEET.
11. GATE VALVES SHALL BE RESILIENT SEAT TYPE WITH MECHANICAL JOINT ENDS AND SHALL OPEN "RIGHT" (CLOCKWISE).
12. METALLIZED, DETECTABLE, IDENTIFICATION TAPE SHALL BE 2-INCHES WIDE, BLUE IN COLOR, AND IMPRINTED WITH THE WORDS "CAUTION - WATER LINE BURIED BELOW", AND SHALL BE INSTALLED OVER ALL MAINS AND HYDRANT RUN-OUTS AT A DEPTH OF 18-24 INCHES BELOW FINISHED GRADE.
13. CURB STOPS SHALL BE INSTALLED 1 FT. TO 1-1/2 FT. BEHIND FACE OF CURB OR EDGE OF PAVEMENT. CURB STOPS ARE NOT TO BE INSTALLED IN EXISTING OR FUTURE DRIVEWAYS.
14. UNLESS OTHERWISE NOTED, BREAKAWAY TYPE HYDRANTS, SHALL BE INSTALLED AT EXISTING LOCATIONS WITH OPERATING NUT POSITIONED 24-INCHES BEHIND FACE OF CURB OR EDGE OF PAVEMENT. THE BREAKAWAY FLANGE SHALL BE SET 2-INCHES TO 4-INCHES ABOVE FINISHED GRADE. HYDRANTS SHALL OPEN "RIGHT" (CLOCKWISE).
15. PORTLAND CEMENT CONCRETE THRUST BLOCKS AND/OR GRAVITY BLOCKS SHALL BE CONSTRUCTED IN PLACE AT CHANGES OF PIPE DIRECTION (TEES, BENDS, ETC) AND/OR DEAD ENDS IN ACCORDANCE WITH PROVIDENCE WATER STANDARDS.
16. ALL UTILITIES TO BE ABANDONED SHALL BE CAPPED OR PLUGGED.
17. UTILITY SERVICE CONNECTIONS SHALL BE MAINTAINED TO ALL EXISTING FACILITIES.
18. FIRE HYDRANTS SHALL NOT BE REMOVED FROM SERVICE WITHOUT EXPRESSED CONSENT FROM THE FIRE DEPARTMENT AND PROVIDENCE WATER.
19. DEMOLITION OF BITUMINOUS PAVING AND CONCRETE SHALL BE PERFORMED BY SAWCUTTING ONLY. RIPPING OF PAVEMENT IS UNACCEPTABLE.
20. UNDER NO CIRCUMSTANCE SHALL THE CONTRACTOR BE ALLOWED TO STOCKPILE REMOVED PAVEMENT MATERIALS WITHIN THE PROJECT LIMITS OR DESIGNATED AREA.
21. THE CONTRACTOR SHALL BE RESPONSIBLE FOR MAINTAINING ALL ROADWAYS FREE OF DEBRIS RESULTING FROM THEIR CONSTRUCTION OPERATIONS. ALL DEBRIS SHALL BE REMOVED TO THE SATISFACTION OF THE ENGINEER AT THE END OF EACH WORK DAY.
22. ALL EXCAVATIONS SHALL BE TEMPORARILY PAVED AT THE CLOSE OF EACH DAYS WORK IN ACCORDANCE WITH EACH RESPECTIVE CITY OR TOWN PERMIT, AS REQUIRED PER SPECIFICATIONS.
23. CONTRACTOR SHALL BE RESPONSIBLE FOR PROTECTION, REPAIRS AND/OR RESTORATION OF ALL AREAS ADJACENT TO THE CONTRACT AREA DISTURBED BY THE CONTRACTOR'S OPERATIONS.
24. ALL VALVES AND COUPLING CONNECTIONS AT WORK LIMIT TERMINATIONS SHALL BE RESTRAINED TO THE NEW PIPING FOR FUTURE WORK IN ADJACENT AREAS.
25. ALL CURB BOX TOPS OF CLOSED-NON USE (CNU) SERVICES ARE TO BE REMOVED (IF FOUND) AND SIDEWALKS ARE TO BE RESTORED. THE CORP AT THE MAIN LINE IS TO BE REMOVED AND THE SERVICE CRIMPED. THE CORP HOLE IS TO BE PLUGGED IF THE MAIN LINE IS NOT REPLACED.

PROVIDENCE WATER

PETER LEPAGE
DIRECTOR OF ENGINEERING

CONTRACT
4-21

GREGORY M. GIASSON
No. 7770
REGISTERED PROFESSIONAL ENGINEER (CIVIL)
7-13-2020

COVER SHEET
WATER MAIN REHABILITATION
UPPER SOUTH PROVIDENCE (PLAIN ST.)
PROVIDENCE, RI

BID DOCUMENT

NO.	DATE	REVISION	APPROVED BY

KD — DRAWN BY
NCR/AP — CHECKED BY
N/A — SCALE
07/13/2020 — DATE

SHEET
1 OF 8

BD_Contract14-20_plans.dwg

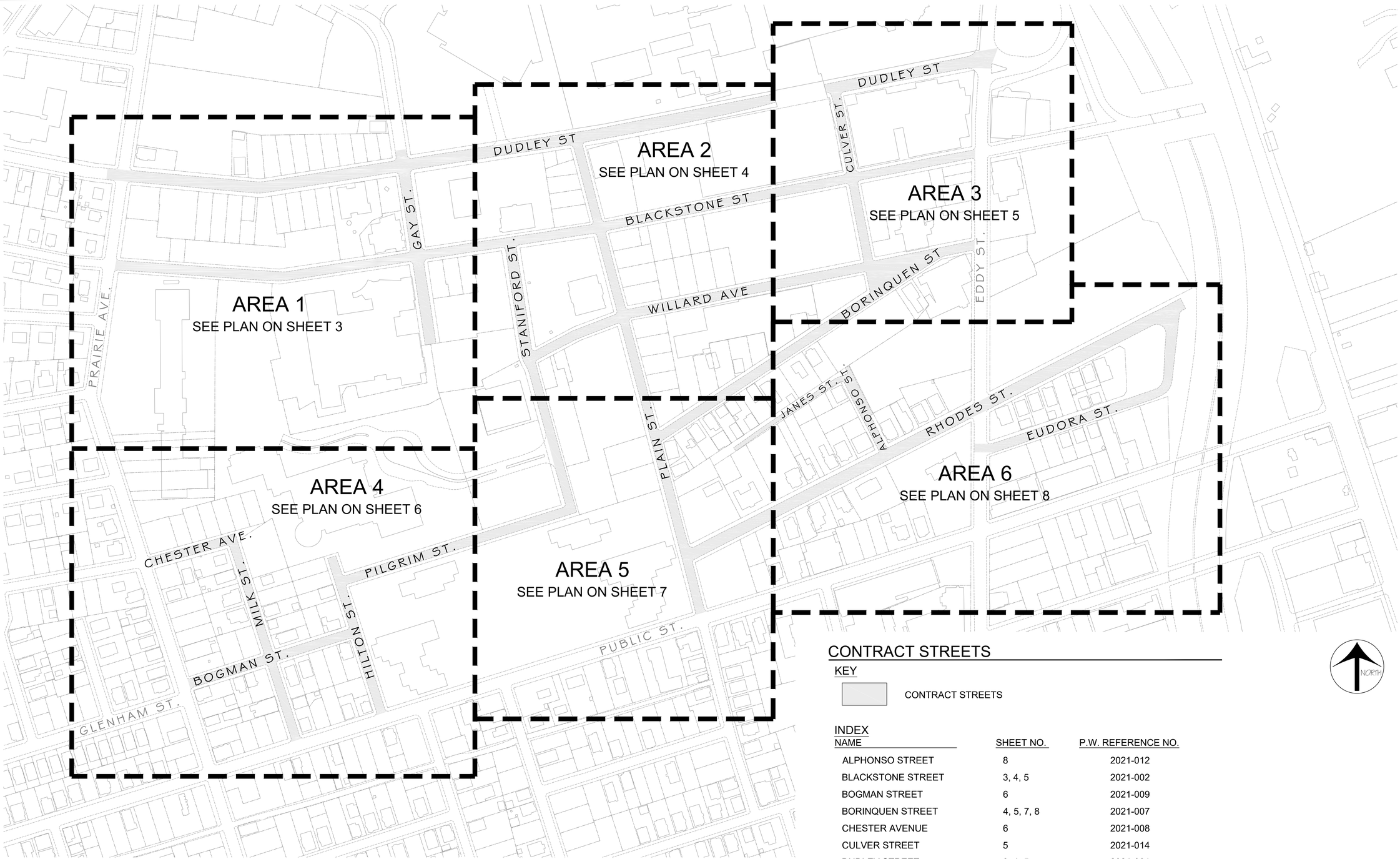

CONTRACT STREETS

KEY

CONTRACT STREETS

INDEX

NAME	SHEET NO.	P.W. REFERENCE NO.
ALPHONSO STREET	8	2021-012
BLACKSTONE STREET	3, 4, 5	2021-002
BOGMAN STREET	6	2021-009
BORINQUEN STREET	4, 5, 7, 8	2021-007
CHESTER AVENUE	6	2021-008
CULVER STREET	5	2021-014
DUDLEY STREET	3, 4, 5	2021-001
EUDORA STREET	8	2021-013
GAY STREET	3	2021-003
HILTON STREET	6	2021-010
MILK STREET	6	2021-008
PILGRIM STREET	6, 7	2021-011
PLAIN STREET	4, 7	2021-004
RHODES STREET	7, 8	2021-012
STANIFORD STREET	4, 7	2021-005
WILLARD AVENUE	4, 5	2021-006

PROVIDENCE WATER

PETER LEPAGE
DIRECTOR OF ENGINEERING

CONTRACT
4-21

GREGORY GIASSON
No. 7770
REGISTERED PROFESSIONAL ENGINEER (CIVIL)
7-13-2020

KEY MAP

WATER MAIN REHABILITATION
UPPER SOUTH PROVIDENCE (PLAIN ST.)
PROVIDENCE, RI

BID DOCUMENT

NO.	DATE	REVISION	APPROVED BY

KD — DRAWN BY
NCR/AP — CHECKED BY
NTS — SCALE
07/13/2020 — DATE

SHEET

2 OF 8

BID_Contract4-20_plans.dwg

PROVIDENCE WATER

PETER LEPAGE
DIRECTOR OF ENGINEERING

CONTRACT 4-21

GREGORY GIASON No. 7770 REGISTERED PROFESSIONAL ENGINEER (CIVIL)

7-13-2020

AREA 1 PLAN

WATER MAIN REHABILITATION
UPPER SOUTH PROVIDENCE (PLAIN ST.)
PROVIDENCE, RI

BID DOCUMENT

NO.	DATE	REVISION	APPROVED BY

KD — DRAWN BY
NCR/AP — CHECKED BY
1"=40'-0" — SCALE
07/13/2020 — DATE

SHEET

3 OF 8

BID_Contract14-20_plans.dwg

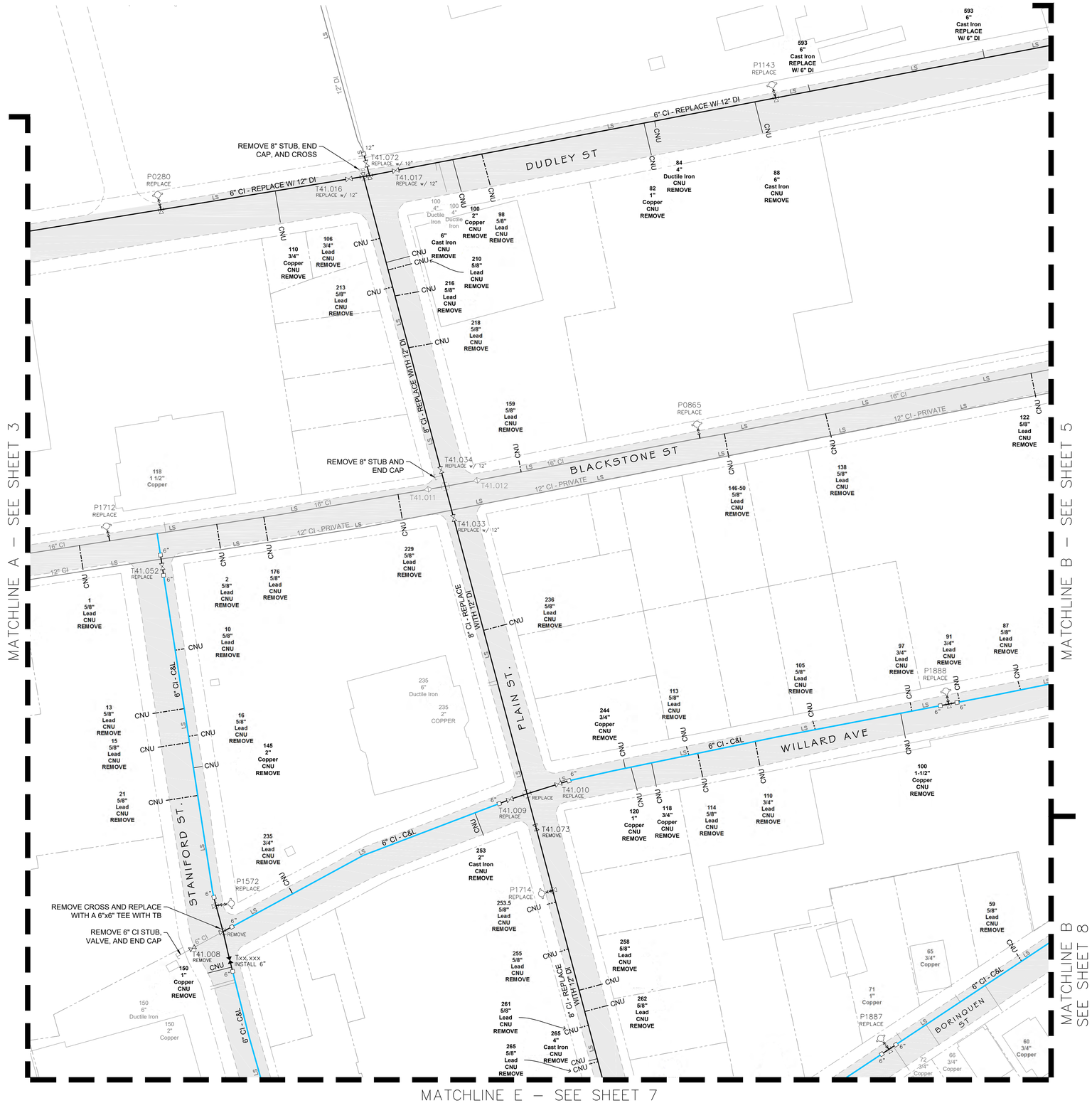

PROVIDENCE WATER

PETER LEPAGE
DIRECTOR OF ENGINEERING

CONTRACT
4-21

GREGORY GIASON
No. 7770
REGISTERED PROFESSIONAL ENGINEER (CIVIL)
7-13-2020

AREA 2 PLAN

WATER MAIN REHABILITATION
UPPER SOUTH PROVIDENCE (PLAIN ST.)
PROVIDENCE, RI

BID DOCUMENT

NO.	DATE	REVISION	APPROVED BY

KD — DRAWN BY
NCR/AP — CHECKED BY
1"=40'-0" — SCALE
07/13/2020 — DATE

SHEET
4 OF 8

BID_Contract14-20_plans.dwg

PROVIDENCE WATER

PETER LEPAGE
DIRECTOR OF ENGINEERING

CONTRACT
4-21

GREGORY GIASON
No. 7770
REGISTERED PROFESSIONAL ENGINEER (CIVIL)
7-13-2020

AREA 3 PLAN

WATER MAIN REHABILITATION
UPPER SOUTH PROVIDENCE (PLAIN ST.)
PROVIDENCE, RI

BID DOCUMENT

NO.	DATE	REVISION	APPROVED BY

KD — DRAWN BY
NCR/AP — CHECKED BY
1"=40'-0" — SCALE
07/13/2020 — DATE

SHEET
5 OF 8

BD_Contract14-20_plans.dwg

MATCHLINE C – SEE SHEET 3

MATCHLINE SEE D – SEE SHEET 7

PROVIDENCE WATER

PETER LEPAGE
DIRECTOR OF ENGINEERING

CONTRACT
4-21

GREGORY GIASON
No. 7770
REGISTERED PROFESSIONAL ENGINEER (CIVIL)
7-13-2020

AREA 4 PLAN

WATER MAIN REHABILITATION
UPPER SOUTH PROVIDENCE (PLAIN ST.)
PROVIDENCE, RI

BID DOCUMENT

NO.	DATE	REVISION	APPROVED BY

KD
DRAWN BY

NCR/AP
CHECKED BY

1"=40'-0"
SCALE

07/13/2020
DATE

SHEET

6 OF 8

BD_Contract14-20_plans.dwg

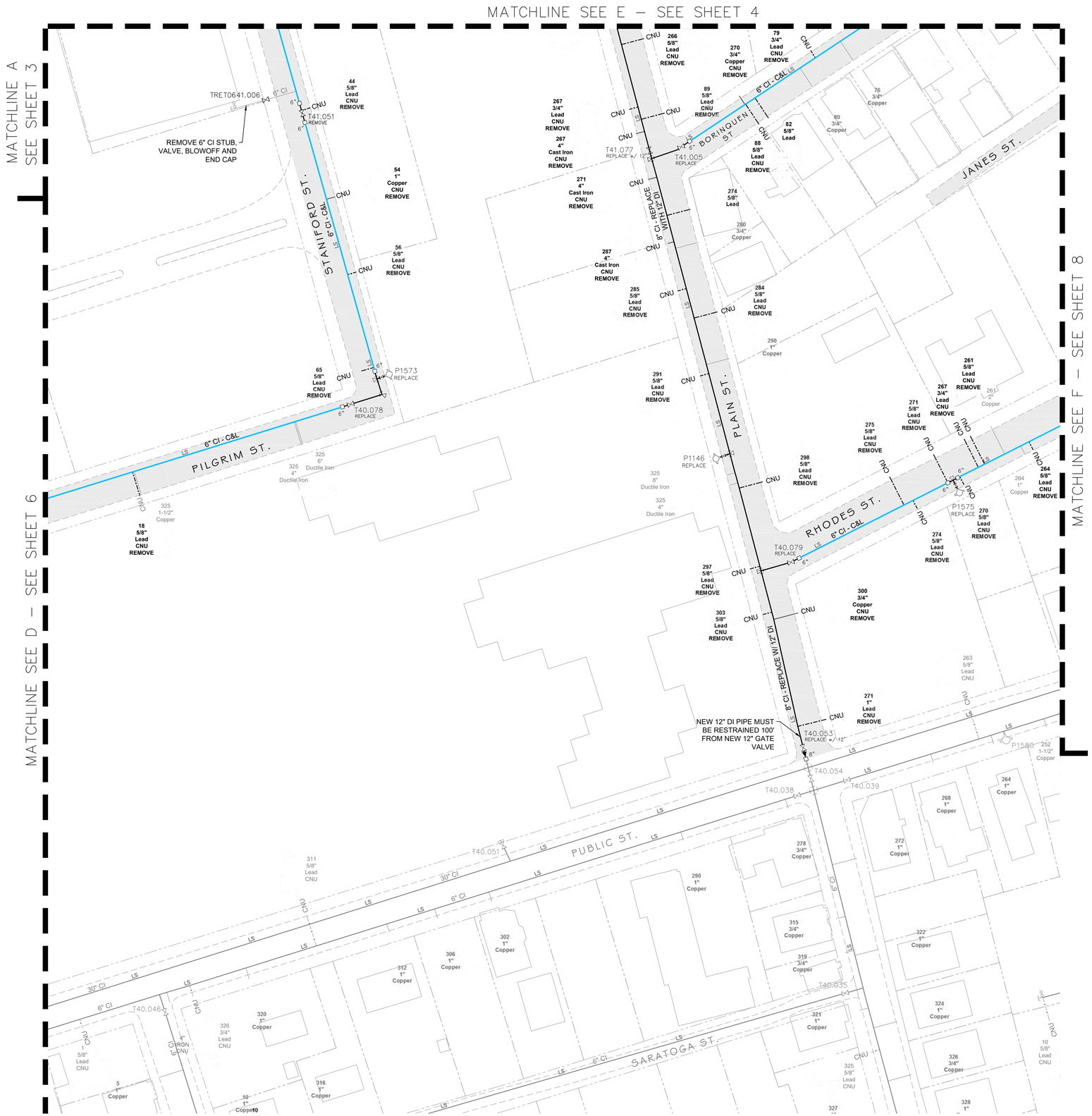

PROVIDENCE WATER

PETER LEPAGE
DIRECTOR OF ENGINEERING

CONTRACT
4-21

GREGORY GIASON
No. 7770
REGISTERED PROFESSIONAL ENGINEER (CIVIL)
7-13-2020

AREA 5 PLAN

WATER MAIN REHABILITATION
UPPER SOUTH PROVIDENCE (PLAIN ST.)
PROVIDENCE, RI

BID DOCUMENT

NO.	DATE	REVISION	APPROVED BY

KD — DRAWN BY
NCR/AP — CHECKED BY
1"=40'-0" — SCALE
07/13/2020 — DATE

SHEET

7 OF 8

BID_Contract14-20_plans.dwg

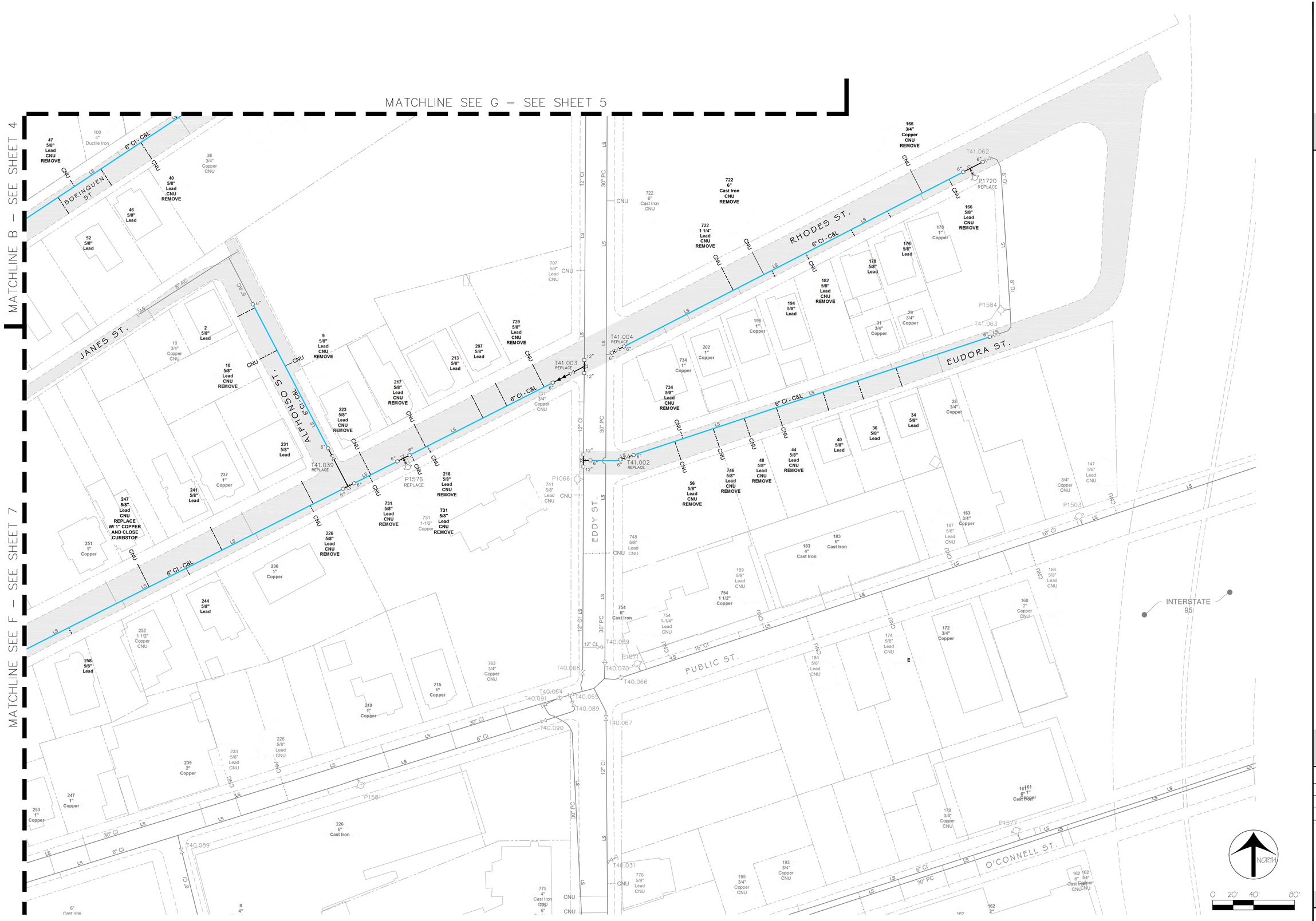

PROVIDENCE WATER

PETER LEPAGE
DIRECTOR OF ENGINEERING

CONTRACT
4-21

GREGORY GIASON
No. 7770
REGISTERED PROFESSIONAL ENGINEER (CIVIL)
7-13-2020

AREA 6 PLAN

WATER MAIN REHABILITATION
UPPER SOUTH PROVIDENCE (PLAIN ST.)
PROVIDENCE, RI

BID DOCUMENT

NO.	DATE	REVISION	APPROVED BY

KD — DRAWN BY
NCR/AP — CHECKED BY
1"=40'-0" — SCALE
07/13/2020 — DATE

SHEET

8 OF 8

BD_Contract14-20_plans.dwg

APPENDIX B

Typical Construction Details

1. **Typical Water Main and Water Service Trench Detail**
2. **Typical Permanent Trench Pavement Restoration**
3. **PWSB New Hydrant Installation & Replacements (H-1)**
4. **Typical Hydrant Guards Detail**
5. **Typical New 2-Inch Blow-off Assembly**
6. **Typical New 2-Inch Blow-off Assembly (On Existing Main)**
7. **Typ. New 2-Inch Wedge Blow-off Assembly (On Exist. Main)**
8. **Typical Detail - Gate Valve**
9. **Typical Gate Valve with Solid Sleeves**
10. **Typ. 4” to 8” Gate Valve with Hymax Couplings (On Exist. Main)**
11. **Valve and Curbstop Boxes**
12. **Typical Detail - Tapping Sleeve & Valve**
13. **PWSB Typical Ductile-Iron Domestic & Fire Services (FS-1)**
14. **PWSB Typical Ductile-Iron Domestic & Fire Services (FS-2)**
15. **Temporary End Cap and Plug Detail**
16. **Thrust Block Details – Dead End & Bend (1 of 4)**
17. **Thrust Block Details – Tee & Typ. Section (2 of 4)**
18. **Thrust Block Tables (3 of 4)**
19. **Thrust Block Notes (4 of 4)**
20. **Temporary Hydrant Detail**
21. **Temporary By-Pass Feed Detail**
22. **Typical Water Service Cut & Cap**
23. **Horizontal Installation of Reduced Pressure Zone & Double Check Valve Backflow Prevention Assembly**
24. **Residential Water Service Connection Schematic – Elevation View**
25. **Owner’s Side Lead Service Replacement Schematic – Plan View**
26. **Typical Reducer Installation**
27. **Air Release**

NOTES:

1. EXISTING STREET PAVEMENT SAW-CUT TO ACCOMMODATE DESIRED TRECH WIDTH. TRENCH WIDTH SHALL NOT EXCEED 4'-0" OR 6" BEYOND THE EXTERIOR OF THE SHEETING OR TRENCH BOX.

2. TEMPORARY PAVEMENT PLACED WITHIN LIMITS OF SAW-CUT TRENCH, OR THE LIMITS OF DISTURBANCE OF EXISTING PAVEMENT, AS REQUIRED

3. TEMPORARY PAVMENT REMOVED AFTER A MINIMUM PERIOD OF 60 DAYS. SEE DETAIL FOR PERMANENT TRENCH RESTORATION METHOD

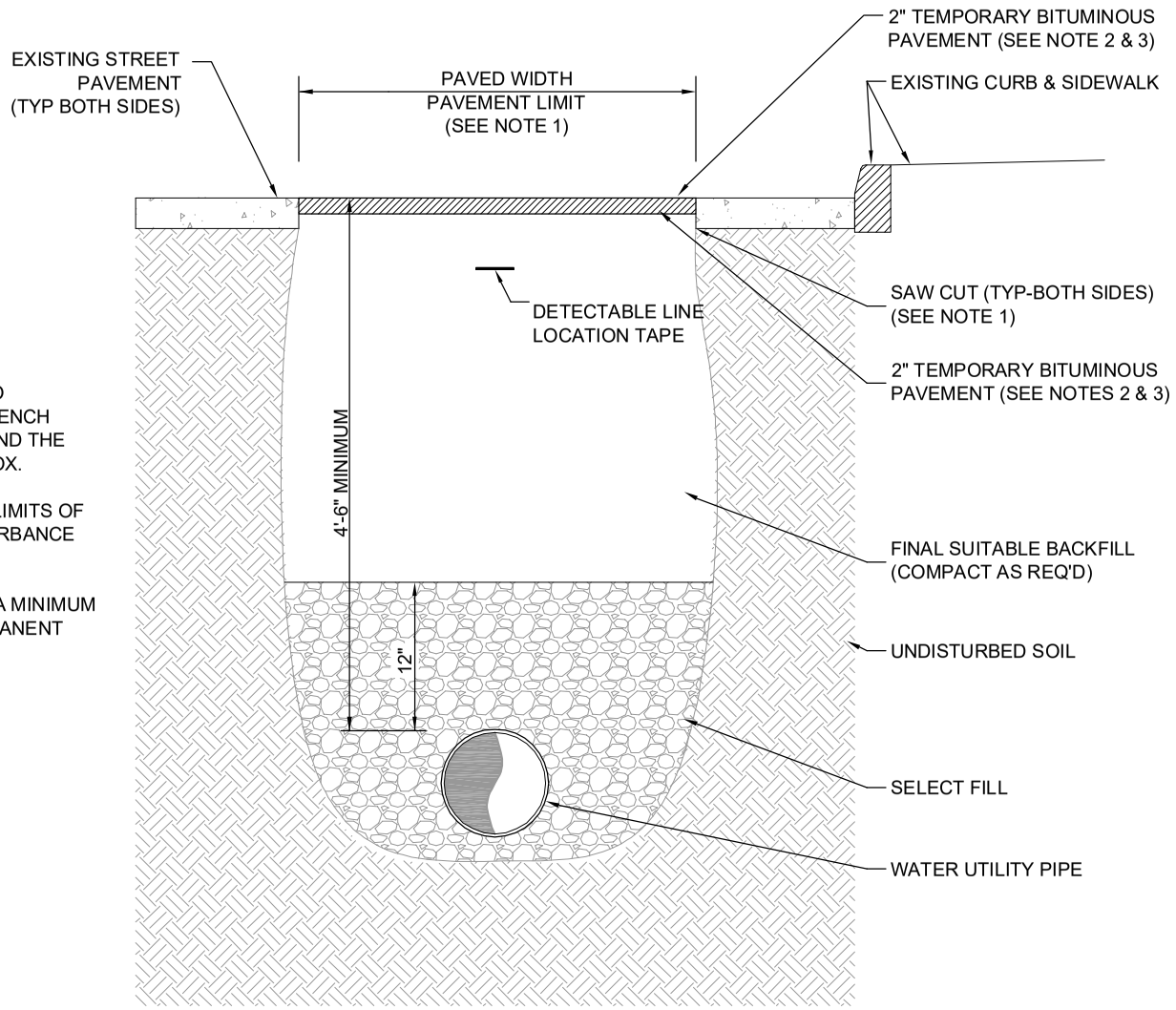

TYPICAL DETAIL WATER MAIN & WATER SERVICE TRENCH DETAIL

NOT TO SCALE

Senior Manager of Engineering Date

Providence Water

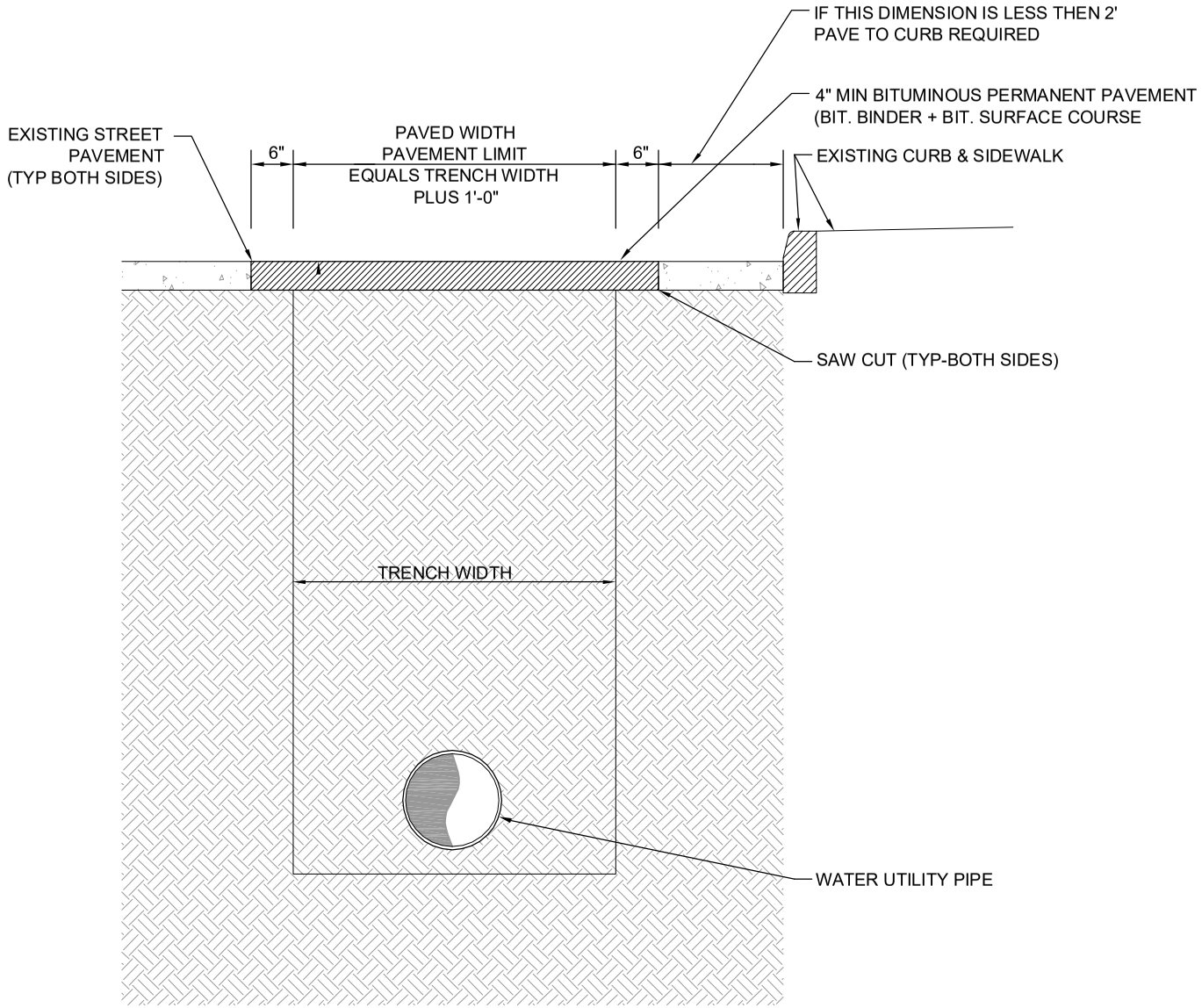

TYPICAL PERMANANT TRENCH PAVEMENT RESTORATION

NOT TO SCALE

Senior Manager of Engineering Date

Providence Water

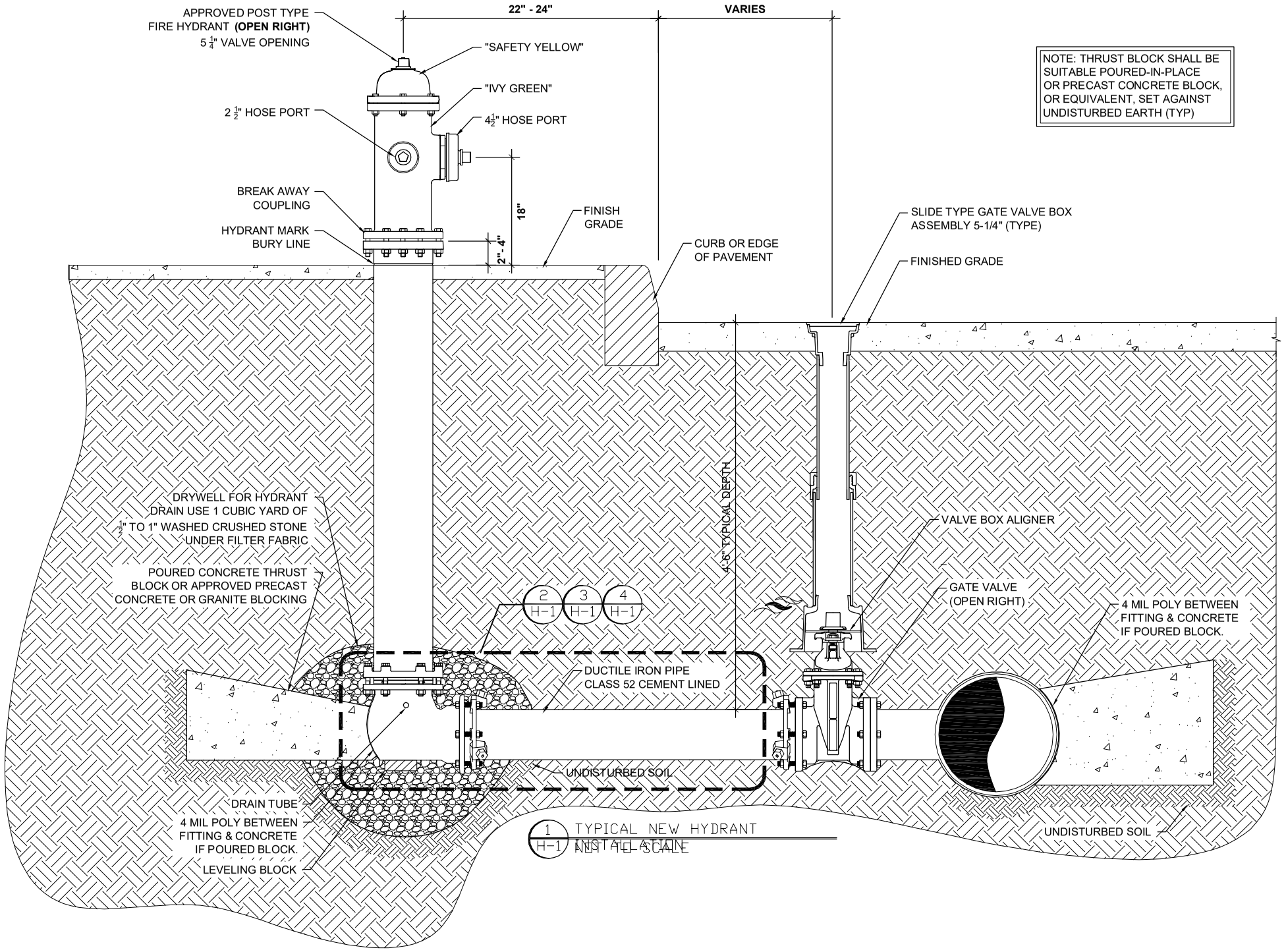

NOTE: THRUST BLOCK SHALL BE SUITABLE POURED-IN-PLACE OR PRECAST CONCRETE BLOCK, OR EQUIVALENT, SET AGAINST UNDISTURBED EARTH (TYP)

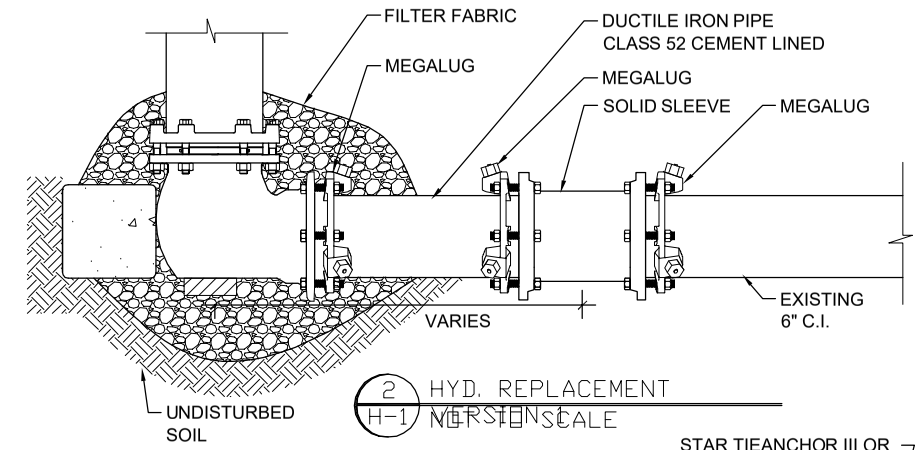

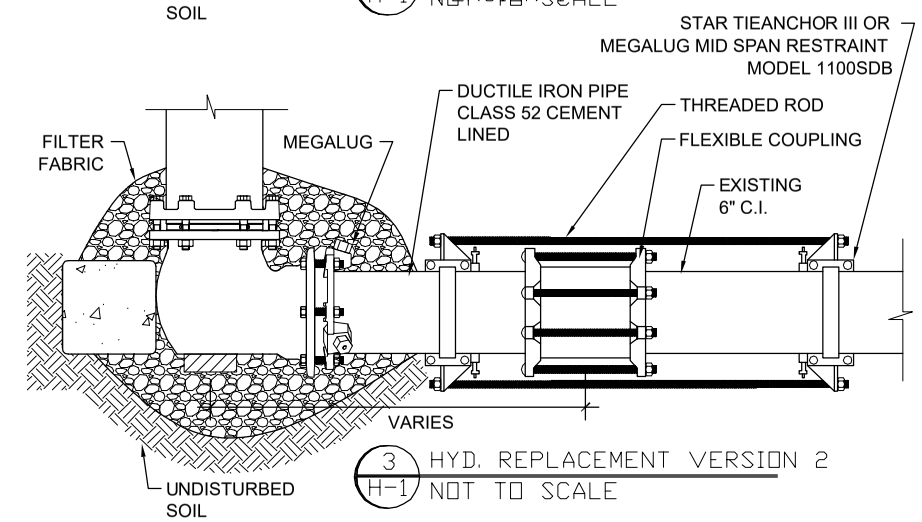

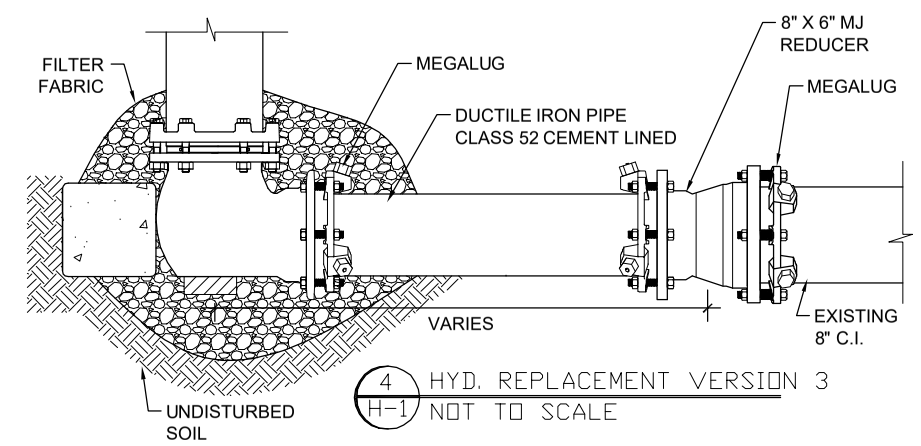

GENERAL NOTES

1. OTHER UTILITIES ARE NOT SHOWN. CONTRACTOR SHALL NOTIFY "DIG-SAFE" & PWSB PRIOR TO COMMENCING WORK.
2. NEW WATER PIPE SHALL BE TESTED AND CHLORINATED IN ACCORDANCE WITH PROVIDENCE WATER STANDARDS AND AS DIRECTED BY PROVIDENCE WATER.
3. NEW WATER PIPE SHALL BE CEMENT-LINED DUCTILE IRON PIPE, CLASS 52, CONFORMING TO THE LATEST AWWA STANDARDS.
4. PIPE FITTINGS SHALL BE CEMENT-LINED DUCTILE IRON, CLASS 350, WITH MECHANICAL JOINT ENDS.
5. UNLESS OTHERWISE NOTED, EARTH COVER OVER PIPE SHALL NOT BE LESS THAN 4'-6".
6. GATE VALVES SHALL BE RESILIENT SEAT TYPE WITH MECHANICAL JOINT ENDS AND SHALL OPEN "RIGHT" (CLOCKWISE).
7. METALLIZED, DETECTABLE, IDENTIFICATION TAPE SHALL BE 2-INCHES WIDE, BLUE IN COLOR, AND IMPRINTED WITH THE WORDS "CAUTION - WATER LINE BURIED BELOW", AND SHALL BE INSTALLED OVER ALL MAINS AND HYDRANT RUN-OUTS AT A DEPTH OF 12-INCHES BELOW FINISHED GRADE.
8. UNLESS OTHERWISE NOTED, BREAKAWAY TYPE HYDRANTS, SHALL BE INSTALLED WITH OPERATING NUT POSITIONED 22-24 INCHES BEHIND FACE OF CURB OR EDGE OF PAVEMENT. THE BREAKAWAY FLANGE SHALL BE SET 2-INCHES TO 4-INCHES ABOVE FINISHED GRADE. HYDRANTS SHALL OPEN "RIGHT" (CLOCKWISE).
9. PROPERLY SIZED CONCRETE THRUST BLOCKS SHALL BE INSTALLED AT CHANGES OF PIPE DIRECTION (TEES, BENDS, ETC) AND/OR DEAD ENDS IN ACCORDANCE WITH PROVIDENCE WATER STANDARDS. FURTHERMORE, MECHANICAL JOINT THRUST RESTRAINTS SHALL BE PLACED ON EACH SIDE OF FITTINGS AND AT PIPE JOINTS TO SUFFICIENTLY RESTRAIN AN ADEQUATE LENGTH OF PIPE AWAY FROM FITTINGS AT 1-1/2 TIMES THE STATIC PRESSURE, OR NOT LESS THAT 150 PSI.

GENERAL NOTES

APPROVED HYDRANTS

- KENNEDY GUARDIAN HYDRANT - K81D
- AMERICAN DARLING HYDRANT - B84B BY AMERICAN FLOW CONTROL

HYDRANTS MUST BE "HYDRA-SHIELD CUSTODIAN" READY.

HYDRANT EXTENSION KITS AND TRAFFIC REPAIR KITS MUST BE AVAILABLE FROM THE MANUFACTURER BY THE ORIGINAL HYDRANT MANUFACTURER & CONSIDERED "ORIGINAL EQUIPMENT", SUBSTITUTES ARE NOT ALLOWED.

TYPICAL LOW SERVICE HYDRANT WOULD HAVE A DEPTH OF 5 FEET

TYPICAL HIGH SERVICE HYDRANT WOULD HAVE A DEPTH OF 5 FEET 6 INCHES

NOTE: FOR REPLACEMENT OF EXISTING HYDRANTS THE DEPTH SHOULD BE DETERMINED PRIOR TO INSTALLATION TO ASSURE THAT NEW HYDRANT IS OF PROPER DEPTH

Providence Water

PWSB NEW HYDRANT INSTALLATION & REPLACEMENTS

MDM DRAWN BY	AMP, JA CHECKED BY	TYPICAL DETAILS
N.T.S. SCALE	5-31-2012 DATE	H-1 SHEET NUMBER
DIRECTOR OF ENGINEERING		1 of 1

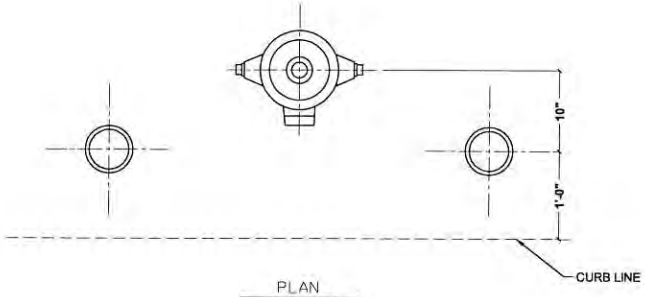

PLAN
NOT TO SCALE

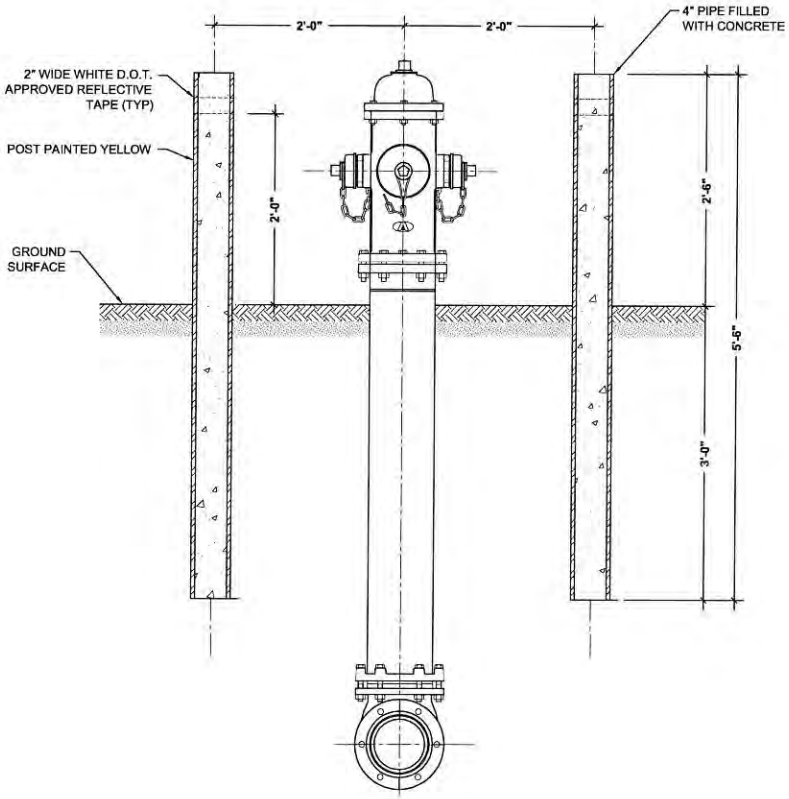

ELEVATION
NOT TO SCALE

TYPICAL HYDRANT GUARDS DETAIL

NOT TO SCALE

6-25-14

Senior Manager of Engineering Date

Providence Water

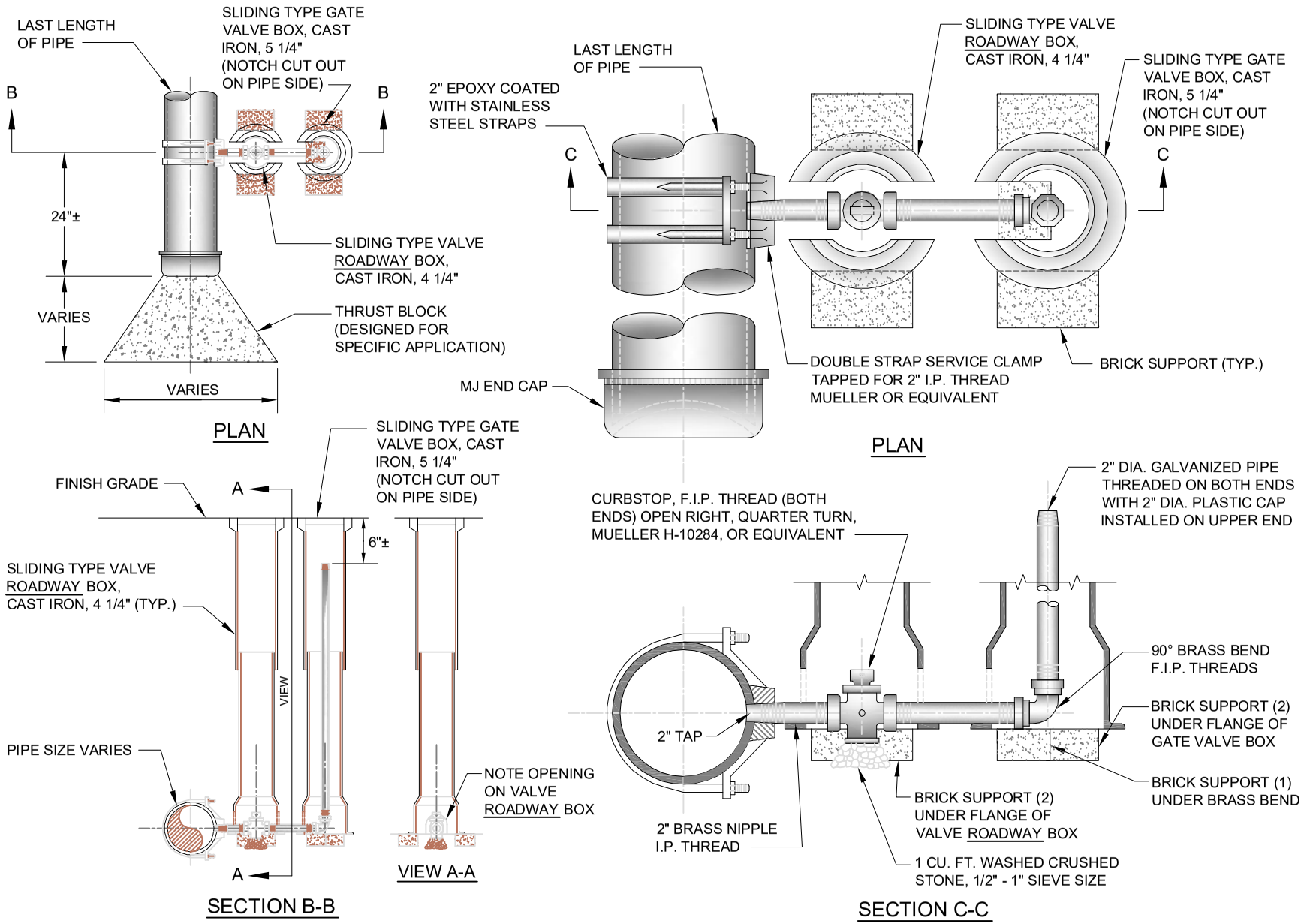

3-11-13

Senior Manager of Engineering Date

TYPICAL NEW 2-INCH BLOWOFF ASSEMBLY

NOT TO SCALE

Providence Water

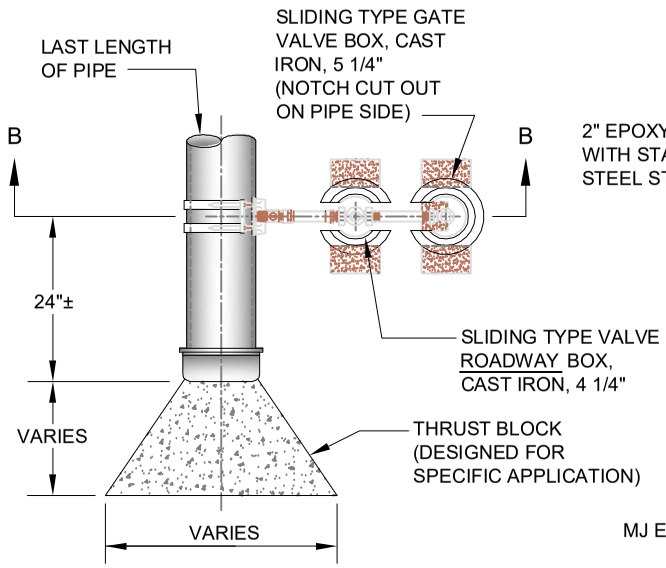

PLAN

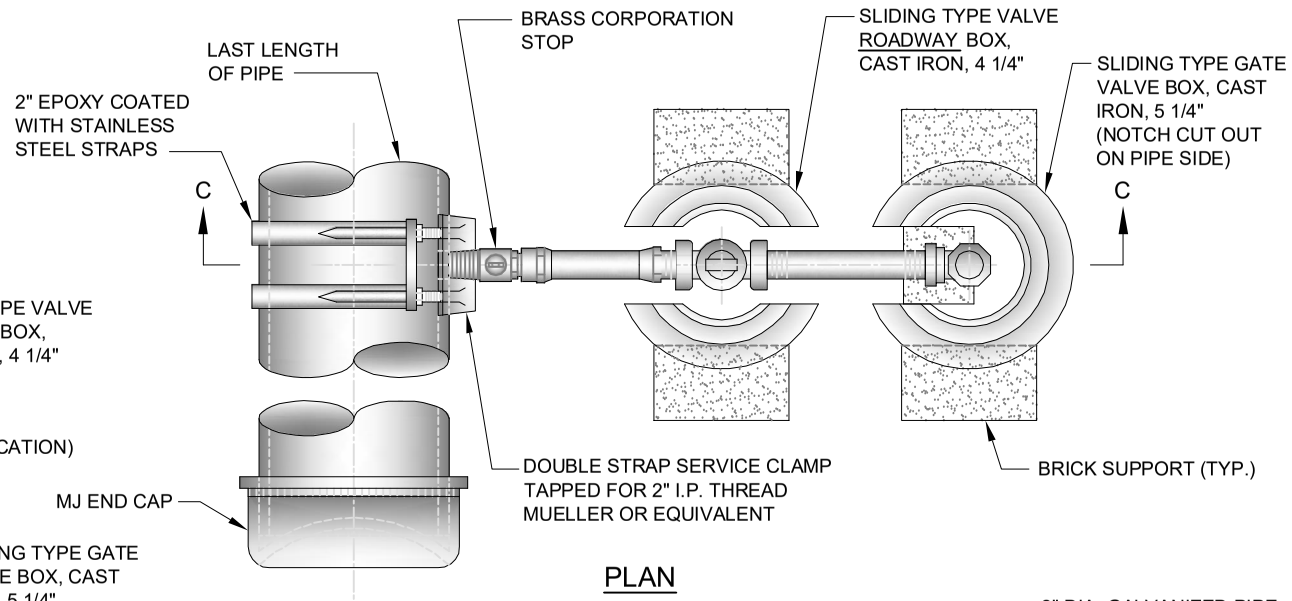

PLAN

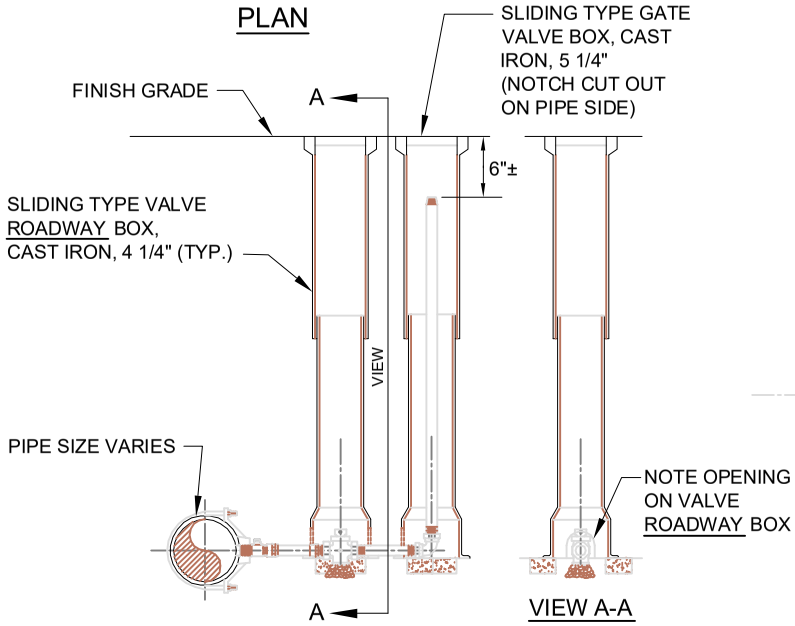

SECTION B-B

VIEW A-A

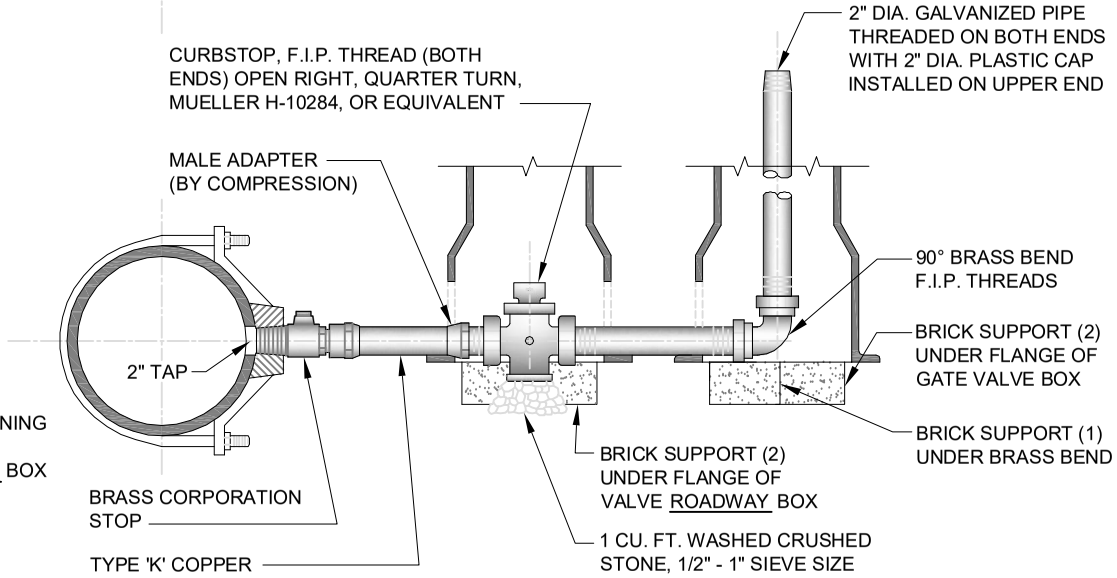

SECTION C-C

3-11-13

Senior Manager of Engineering Date

TYPICAL NEW 2-INCH BLOWOFF ASSEMBLY
(ON EXISTING MAIN)
NOT TO SCALE

Providence Water

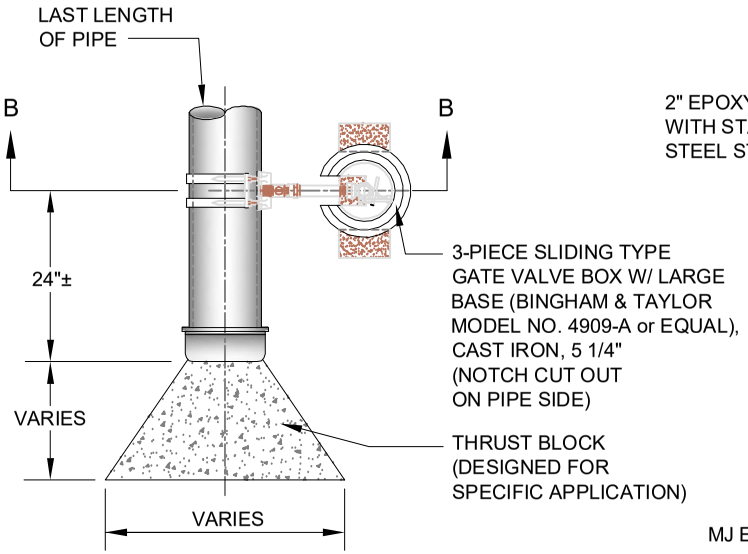

PLAN

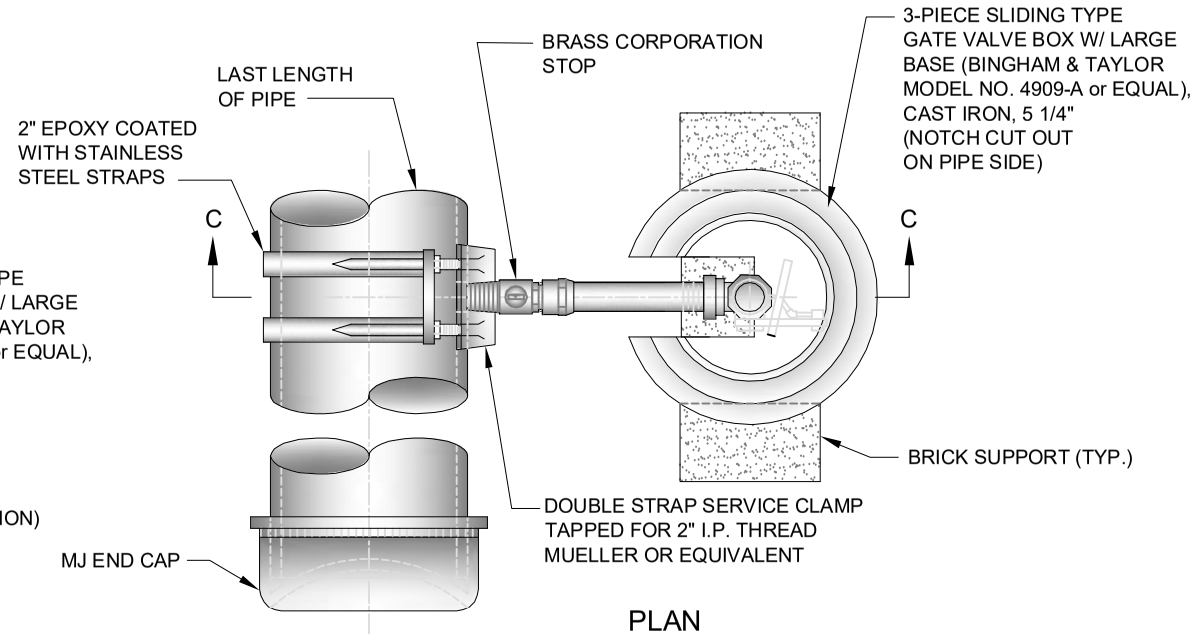

PLAN

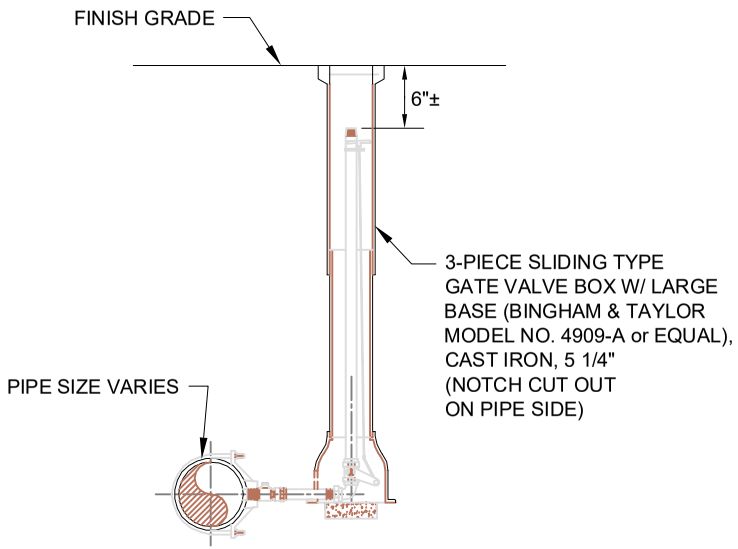

SECTION B-B

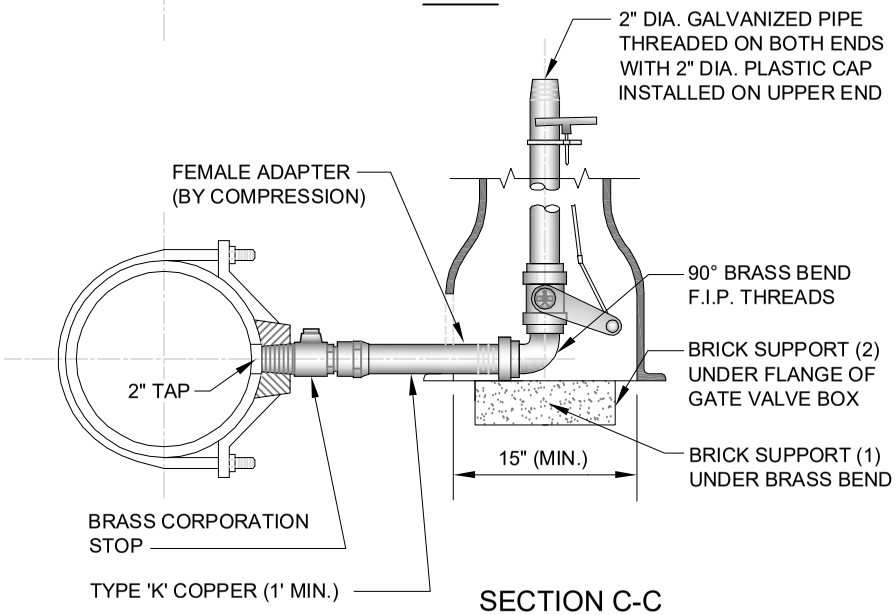

SECTION C-C

TYPICAL
NEW 2-INCH WEDGE BLOWOFF ASSEMBLY
(ON EXISTING MAIN)

NOT TO SCALE

3-11-13

Senior Manager of Engineering Date

Providence Water

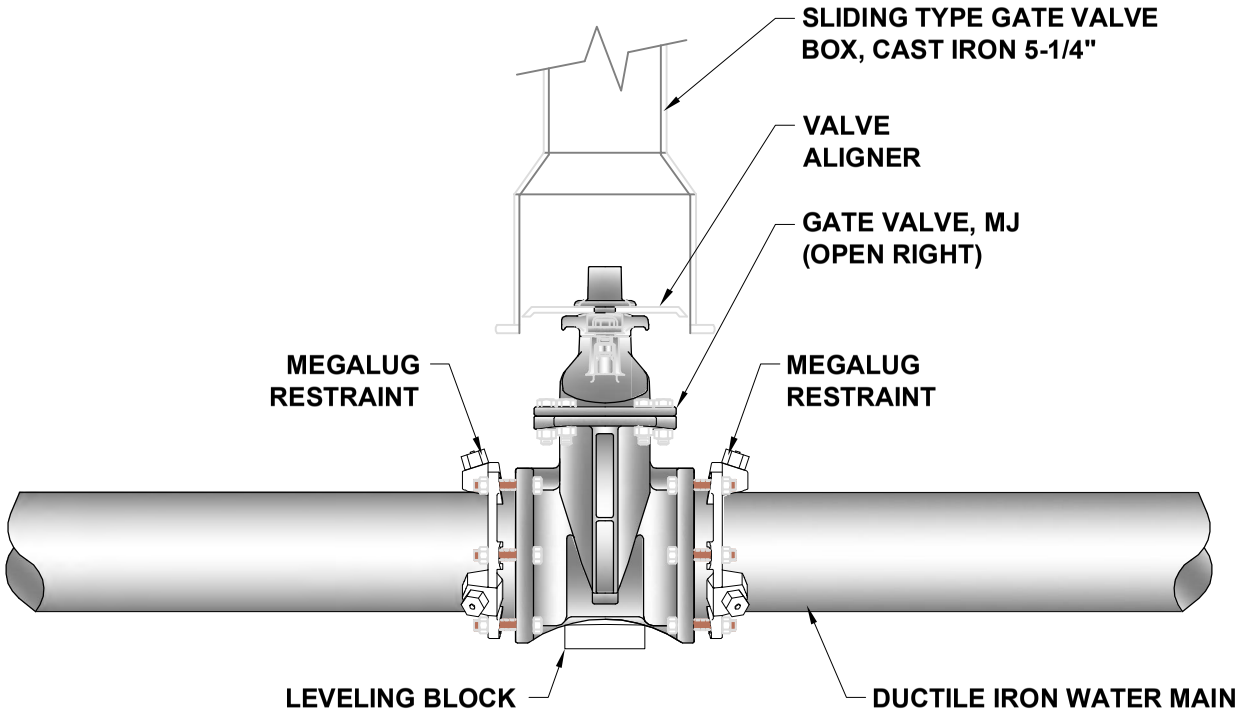

TYPICAL DETAIL
GATE VALVE

NOT TO SCALE

Senior Manager of Engineering Date

Providence Water

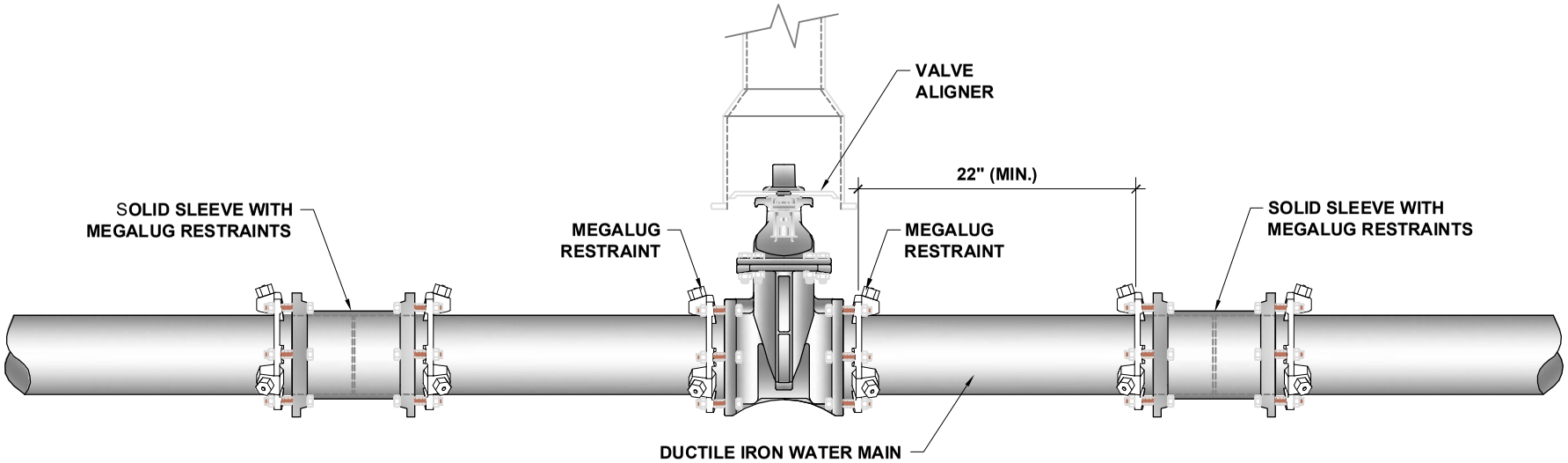

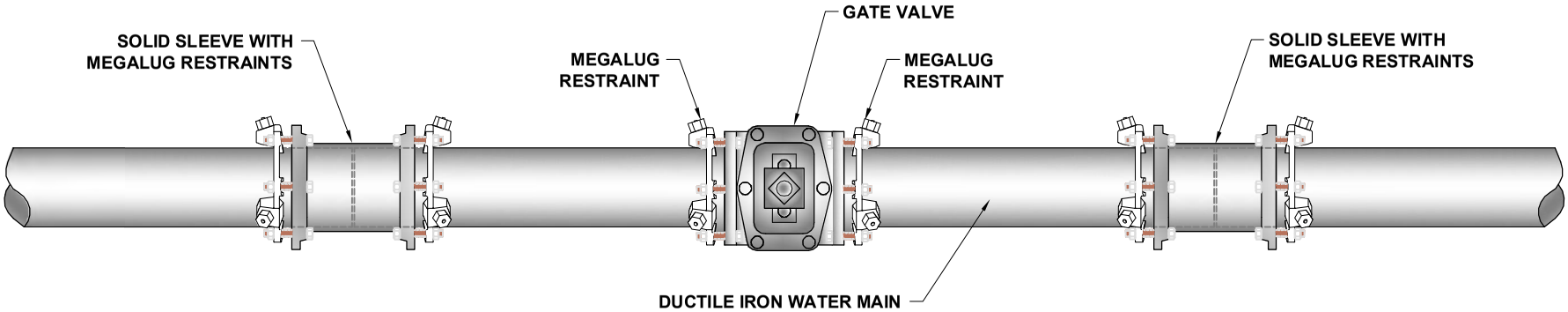

TYPICAL GATE VALVE W/ SOLID SLEEVES

NOT TO SCALE

3-11-13

Senior Manager of Engineering Date

Providence Water

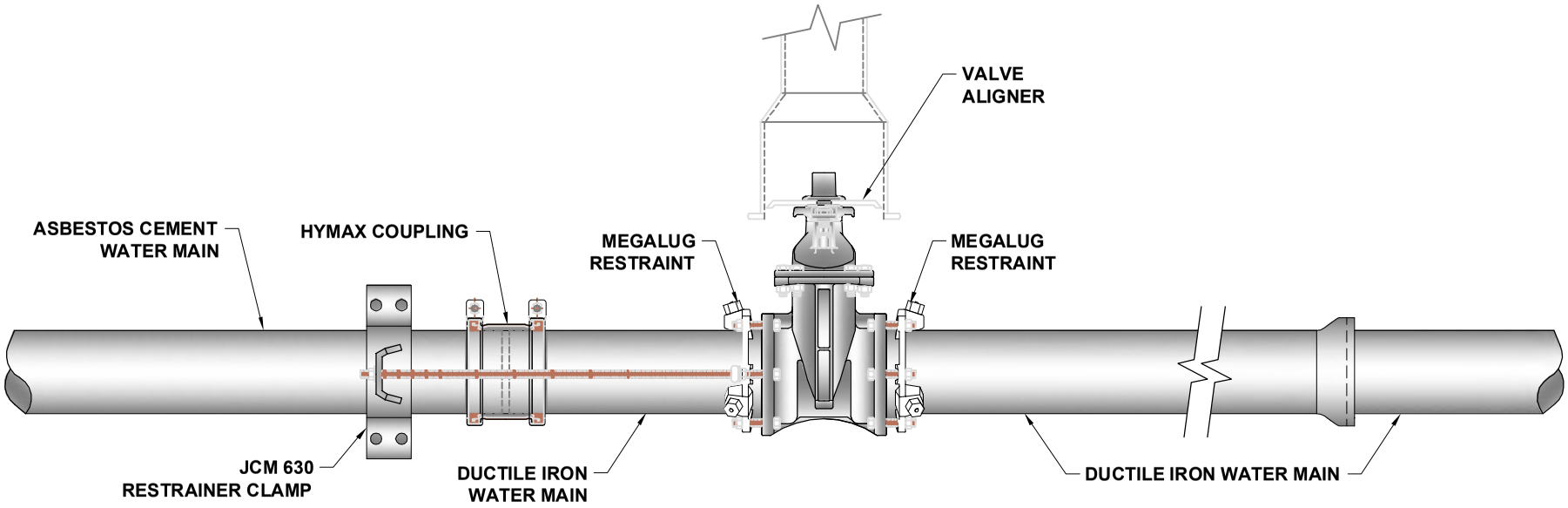

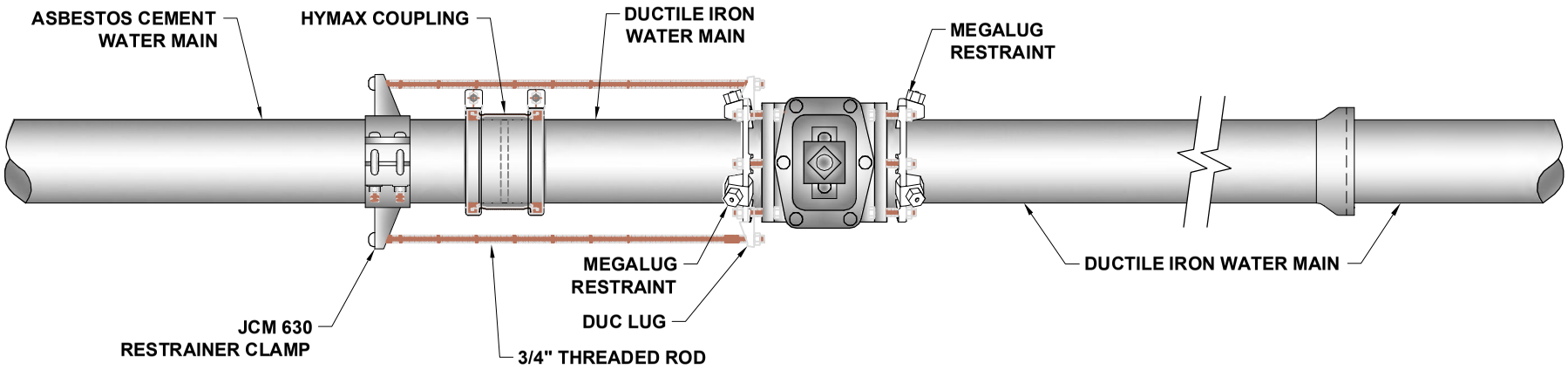

TYPICAL 4″ TO 8″ GATE VALVE INSTALLATION WITH HYMAX COUPLINGS

(ON EXISTING AC and DI PIPE)

NOT TO SCALE

3-11-13

Senior Manager of Engineering Date

Providence Water

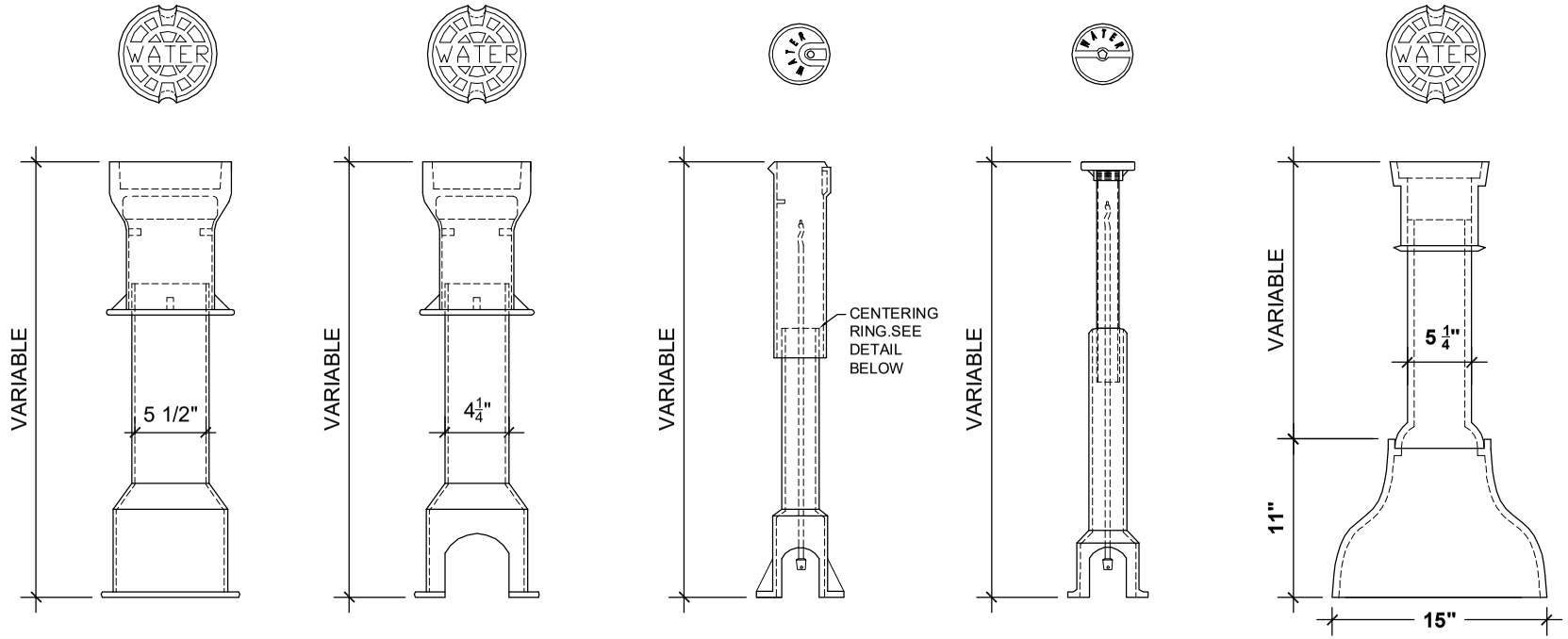

GATE VALVE BOX
BINGHAM & TAYLOR
FIG. NO. 4908
OR EQUIVLANT

ROADWAY BOX
1-1/2" - 2" SERVICE
BINGHAM & TAYLOR
FIG. NO. 4903
OR EQUIVLANT

BUFFALO BOX
USED UNDER SPECIAL
CICUMSTANCES
BINGHAM & TAYLOR
FIG. NO. 4901
OR EQUIVLANT

ERIE BOX
3/4" - 1" SERVICE
BINGHAM & TAYLOR
FIG. NO. E-100 / E-125
OR EQUIVLANT

3-PIECE VALVE BOX
WEDGE 2" BLOW OFF
BINGHAM & TAYLOR
FIG. NO. 4909-A
OR EQUIVLANT

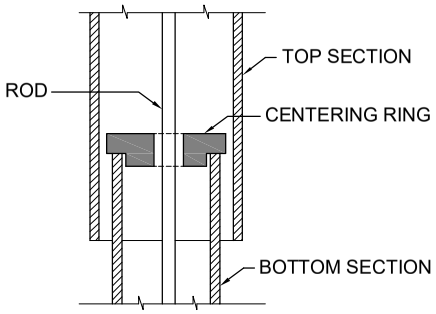

VALVE & CURBSTOP BOXES

NOT TO SCALE

3-11-13

Senior Manager of Engineering Date

Providence Water

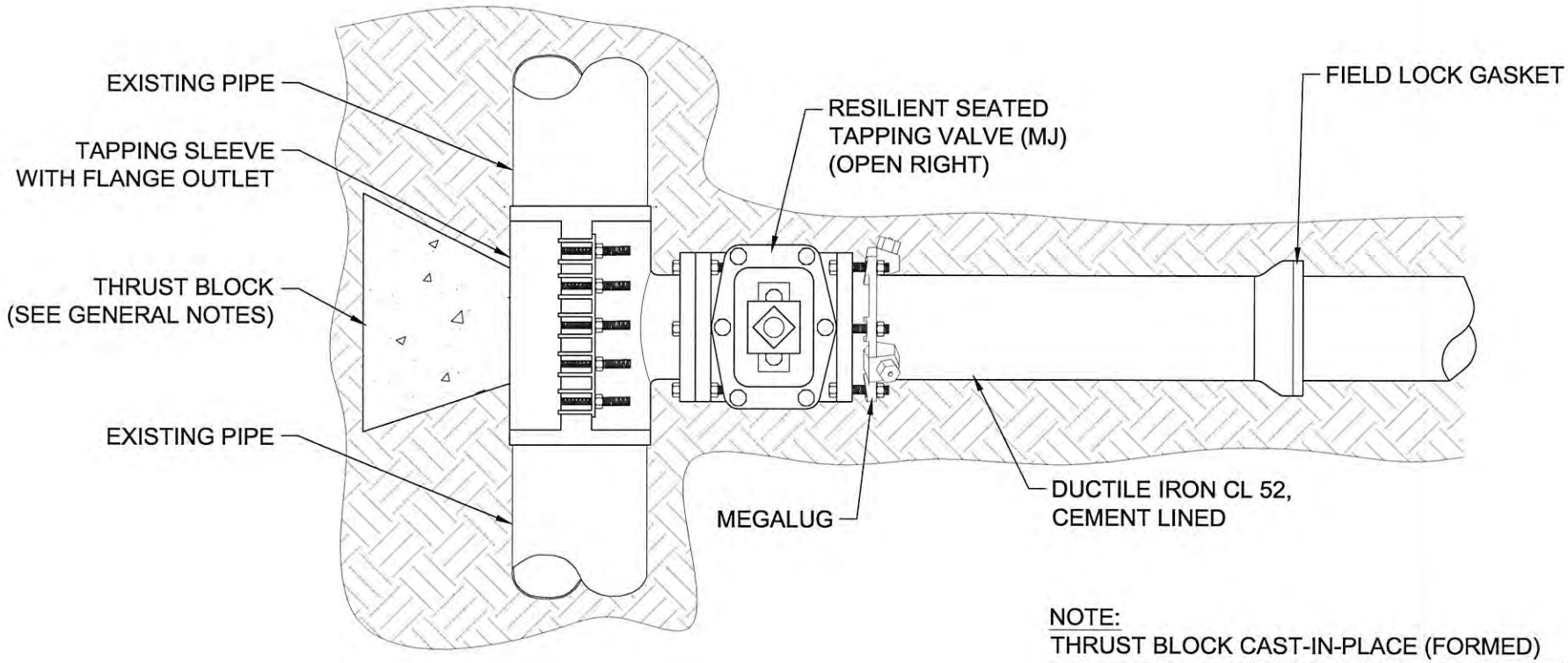

NOTE:
THRUST BLOCK CAST-IN-PLACE (FORMED) 3,000 PSI (MIN) PORTLAND CEMENT CONCRETE BEARING AGAINST UNDISTURBED EARTH. DESIGN PARAMETERS: 150 PSI WATER PRESSURE (MIN). SOIL BEARING STRENGTH 15,000 PSF. TO BE USED IN CONJUNCTION WITH MECHANICAL JOINT RESTRAINT SYSTEM

TYPICAL DETAIL
TAPPING SLEEVE & VALVE

NOT TO SCALE

Senior Manager of Engineering Date

Providence Water

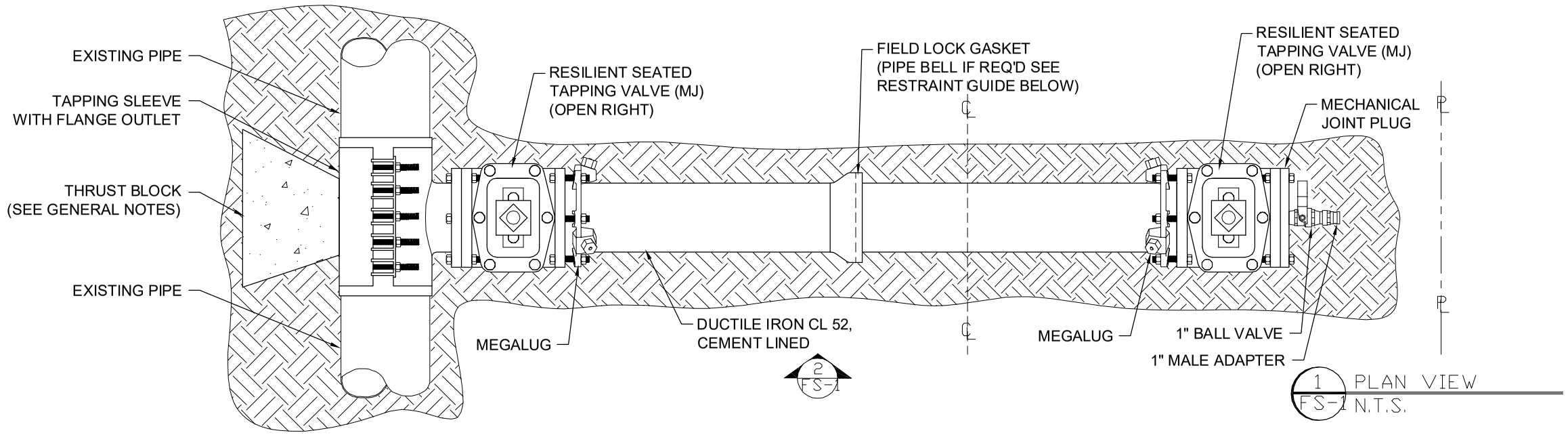

1 PLAN VIEW
FS-1 N.T.S.

2 PROFILE VIEW
FS-1 N.T.S.

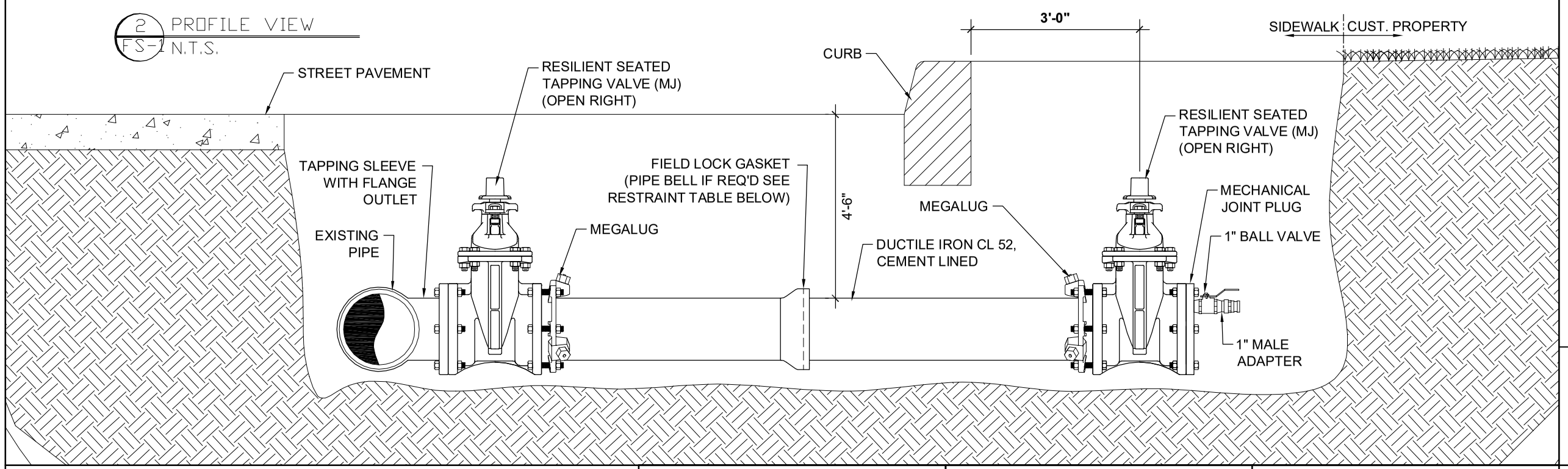

GENERAL NOTES:

1. OTHER EXISTING UTILITIES ARE NOT SHOWN. CONTRACTOR SHALL NOTIFY "DIG–SAFE" PRIOR TO COMMENCING WORK.
2. NEW WATER MAINS SHALL BE TESTED AND CHLORINATED IN ACCORDANCE WITH PROVIDENCE WATER STANDARDS AND AS DIRECTED BY PROVIDENCE WATER.
3. NEW WATER MAINS SHALL BE CEMENT–LINED DUCTILE IRON PIPE, CLASS 52, CONFORMING TO THE LATEST AWWA STANDARDS.
4. PIPE FITTINGS SHALL BE CEMENT–LINED DUCTILE IRON, CLASS 350, WITH MECHANICAL JOINT ENDS.
5. UNLESS OTHERWISE NOTED, EARTH COVER OVER PIPE SHALL NOT BE LESS THAN 4.5–FEET.
6. GATE VALVES SHALL BE RESILIENT SEAT TYPE WITH MECHANICAL JOINT ENDS AND SHALL OPEN "RIGHT" (CLOCKWISE).
7. METALLIZED, DETECTABLE, IDENTIFICATION TAPE SHALL BE 2–INCHES WIDE, BLUE IN COLOR, AND IMPRINTED WITH THE WORDS "CAUTION – WATER LINE BURIED BELOW", AND SHALL BE INSTALLED OVER ALL MAINS AND HYDRANT RUN–OUTS AT A DEPTH OF 12–INCHES BELOW FINISHED GRADE.
8. CURB STOPS SHALL BE INSTALLED 1 FT. TO 1–1/2 FT. BEHIND FACE OF CURB OR EDGE OF PAVEMENT. CURB STOPS ARE NOT TO BE INSTALLED IN EXISTING OR FUTURE DRIVEWAYS.
9. UNLESS OTHERWISE NOTED, BREAKAWAY TYPE HYDRANTS, WHERE REQUIRED, SHALL BE INSTALLED AT EXISTING LOCATIONS WITH OPERATING NUT POSITIONED 24–INCHES BEHIND FACE OF CURB OR EDGE OF PAVEMENT. THE BREAKAWAY FLANGE SHALL BE SET 2–INCHES TO 4–INCHES ABOVE FINISHED GRADE. HYDRANTS SHALL OPEN "RIGHT" (CLOCKWISE).
10. PORTLAND CEMENT CONCRETE THRUST BLOCKS AND/OR GRAVITY BLOCKS SHALL BE CONSTRUCTED IN PLACE AT CHANGES OF PIPE DIRECTION (TEES, BENDS, ETC) AND/OR DEAD ENDS IN ACCORDANCE WITH PROVIDENCE WATER STANDARDS. FURTHERMORE, MECHANICAL JOINT THRUST RESTRAINTS SHALL BE PLACED ON EACH SIDE OF IN–LINE FITTINGS OR PIPE JOINTS PRIOR TO END CAPS/PLUGS SO AS TO SUFFICIENTLY RESTRAIN AN ADEQUATE LENGTH OF PIPE AT 1–1/2 TIMES THE STATIC PRESSURE, BUT IN ANY EVENT, NOT LESS THAN 150 PSI.

RESTRAINTS		RESTRAINTS	
TAPPING SLEEVE	LENGTH	TAPPING SLEEVE	LENGTH
4"X4"	33'	12"X4"	33'
6"X4"	33'	12"X6"	47'
6"X6"	47'	12" X 8"	61'
8"X4"	33'	12"X10"	74'
8"X6"	47'	12"X12"	87'
8"X8"	61'	-	-
10"X4"	33'	-	-
10"X6"	47'	-	-
10"X8"	61'	-	-
10"X10"	74'	-	-

RESTRAINTS					
BENDS					
	90°	45°	22.5°	11.25°	-
SIZE	RESTRAINT LENGTH				-
4"	13'	5'	3'	1'	-
6"	19'	8'	4'	2'	-
8"	24'	10'	5'	2'	-
10"	29'	12'	6'	3'	-
12"	34'	14'	7'	3'	-
					-
					-
					-

Providence Water

APPROVED PWSB MANUFACTURERS

DUCTILE IRON PIPE

- ATLANTIC STATES CAST IRON PIPE CO.
- GRIFFIN PIPE PRODUCTS CO.
- U.S. PIPE & FOUNDRY CO.

TAPPING SLEEVES & VALVES

- AMERICAN FLOW CONTROL
- CLOW VALVE CO.
- KENNEDY VALVE
- M&H VALVE CO.
- MUELLER CO.
- U.S. PIPE & FOUNDRY CO.
- AVK

JOINT RESTRAINTS (MECHANICAL

- EBBA IRON SALES, INC - MEGALUG

JOINT RESTRAINTS (GASKETED)

- U.S. PIPE & FOUNDRY CO.
  FIELD LOK 350 GASKET

PWSB TYPICAL DETAIL
DUCTILE IRON DOMESTIC
& FIRE SERVICES 4"±

MDM	AMP
DRAWN BY	CHECKED BY
N.T.S.	11-28-2011
SCALE	DATE

3-11-13

SENIOR MANAGER OF ENGINEERING

FS-1

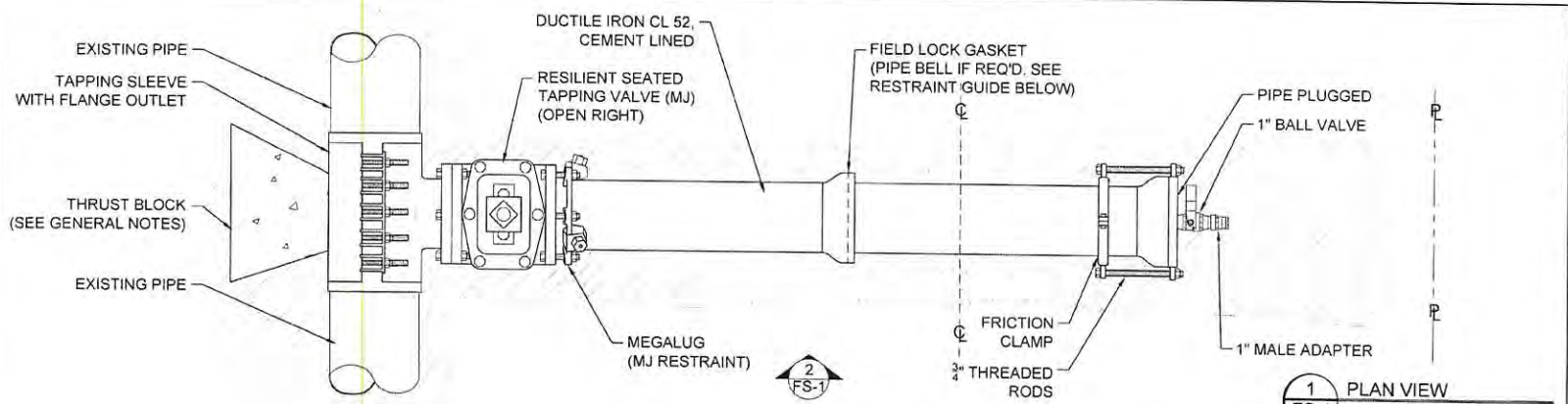

1 FS-1 PLAN VIEW
N.T.S.

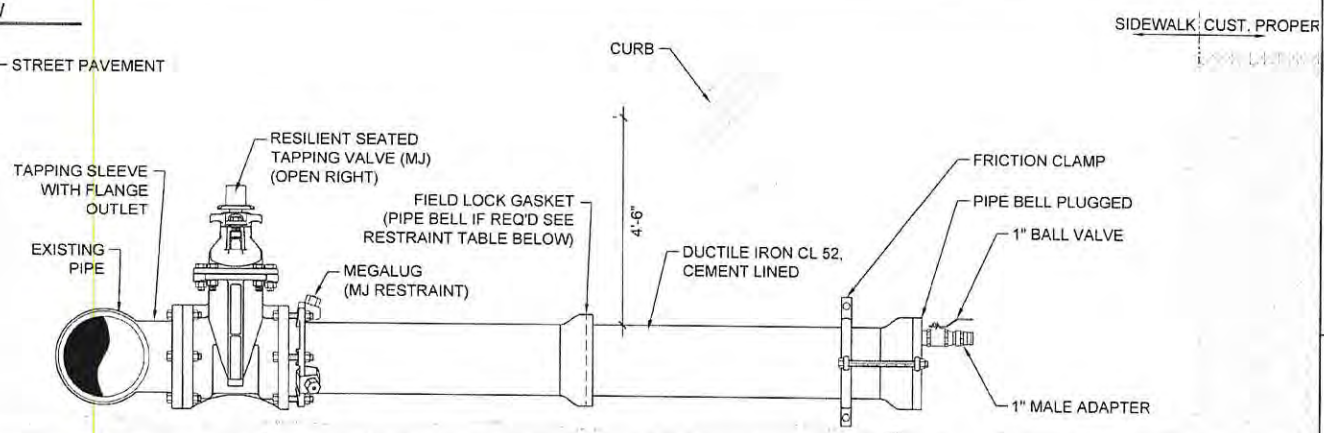

2 FS-1 PROFILE VIEW
N.T.S.

GENERAL NOTES:

1. OTHER EXISTING UTILITIES ARE NOT SHOWN. CONTRACTOR SHALL NOTIFY "DIG-SAFE" PRIOR TO COMMENCING WORK.
2. NEW WATER MAINS SHALL BE TESTED AND CHLORINATED IN ACCORDANCE WITH PROVIDENCE WATER STANDARDS AND AS DIRECTED BY PROVIDENCE WATER.
3. NEW WATER MAINS SHALL BE CEMENT-LINED DUCTILE IRON PIPE, CLASS 52, CONFORMING TO THE LATEST AWWA STANDARDS.
4. PIPE FITTINGS SHALL BE CEMENT-LINED DUCTILE IRON, CLASS 350, WITH MECHANICAL JOINT ENDS.
5. UNLESS OTHERWISE NOTED, EARTH COVER OVER PIPE SHALL NOT BE LESS THAN 4.5-FEET.
6. GATE VALVES SHALL BE RESILIENT SEAT TYPE WITH MECHANICAL JOINT ENDS AND SHALL OPEN "RIGHT" (CLOCKWISE).
7. METALLIZED, DETECTABLE, IDENTIFICATION TAPE SHALL BE 2-INCHES WIDE, BLUE IN COLOR, AND IMPRINTED WITH THE WORDS "CAUTION - WATER LINE BURIED BELOW", AND SHALL BE INSTALLED OVER ALL MAINS AND HYDRANT RUN-OUTS AT A DEPTH OF 12-INCHES BELOW FINISHED GRADE.
8. CURB STOPS SHALL BE INSTALLED 1 FT. TO 1-1/2 FT. BEHIND FACE OF CURB OR EDGE OF PAVEMENT. CURB STOPS ARE NOT TO BE INSTALLED IN EXISTING OR FUTURE DRIVEWAYS.
9. UNLESS OTHERWISE NOTED, BREAKAWAY TYPE HYDRANTS, WHERE REQUIRED, SHALL BE INSTALLED AT EXISTING LOCATIONS WITH OPERATING NUT POSITIONED 24-INCHES BEHIND FACE OF CURB OR EDGE OF PAVEMENT. THE BREAKAWAY FLANGE SHALL BE SET 2-INCHES TO 4-INCHES ABOVE FINISHED GRADE. HYDRANTS SHALL OPEN "RIGHT" (CLOCKWISE).
10. PORTLAND CEMENT CONCRETE THRUST BLOCKS AND/OR GRAVITY BLOCKS SHALL BE CONSTRUCTED IN PLACE AT CHANGES OF PIPE DIRECTION (TEES, BENDS, ETC) AND/OR DEAD ENDS IN ACCORDANCE WITH PROVIDENCE WATER STANDARDS. FURTHERMORE, MECHANICAL JOINT THRUST RESTRAINTS SHALL BE PLACED ON EACH SIDE OF IN-LINE FITTINGS OR PIPE JOINTS PRIOR TO END CAPS/PLUGS SO AS TO SUFFICIENTLY RESTRAIN AN ADEQUATE LENGTH OF PIPE AT 1-1/2 TIMES THE STATIC PRESSURE, BUT IN ANY EVENT, NOT LESS THAN 150 PSI.

RESTRAINTS		RESTRAINTS	
TAPPING SLEEVE	LENGTH	TAPPING SLEEVE	LENGTH
4"X4"	33'	12"X4"	33'
6"X4"	33'	12"X6"	47'
6"X6"	47'	12" X 8"	61'
8"X4"	33'	12"X10"	74'
8"X6"	47'	12"X12"	87'
8"X8"	61'	-	-
10"X4"	33'	-	-
10"X6"	47'	-	-
10"X8"	61'	-	-
10"X10"	74'	-	-

RESTRAINTS					
	BENDS				
	90°	45°	22.5°	11.25°	
SIZE	RESTRAINT LENGTH				-
4"	13'	5'	3'	1'	-
6"	19'	8'	4'	2'	-
8"	24'	10'	5'	2'	-
10"	29'	12'	6'	3'	-
12"	34'	14'	7'	3'	-
					-
					-
					-
					-

Providence Water

APPROVED PWSB MANUFACTURERS

DUCTILE IRON PIPE

- ATLANTIC STATES CAST IRON PIPE CO.
- GRIFFIN PIPE PRODUCTS CO.
- U.S. PIPE & FOUNDRY CO.

TAPPING SLEEVES & VALVES

- AMERICAN FLOW CONTROL
- CLOW VALVE CO.
- KENNEDY VALVE
- M&H VALVE CO.
- MUELLER CO.
- U.S. PIPE & FOUNDRY CO.
- AVK

JOINT RESTRAINTS (MECHANICAL

- EBBA IRON SALES, INC - MEGALUG

JOINT RESTRAINTS (GASKETED)

- U.S. PIPE & FOUNDRY CO.
  FIELD LOK 350 GASKET

PWSB TYPICAL DUCTILE IRON DOMESTIC & FIRE SERVICES 4"±

MDM	AMP
DRAWN BY	CHECKED BY
N.T.S.	11-9-2011
SCALE	DATE

DIRECTOR OF ENGINEERING

FS-2

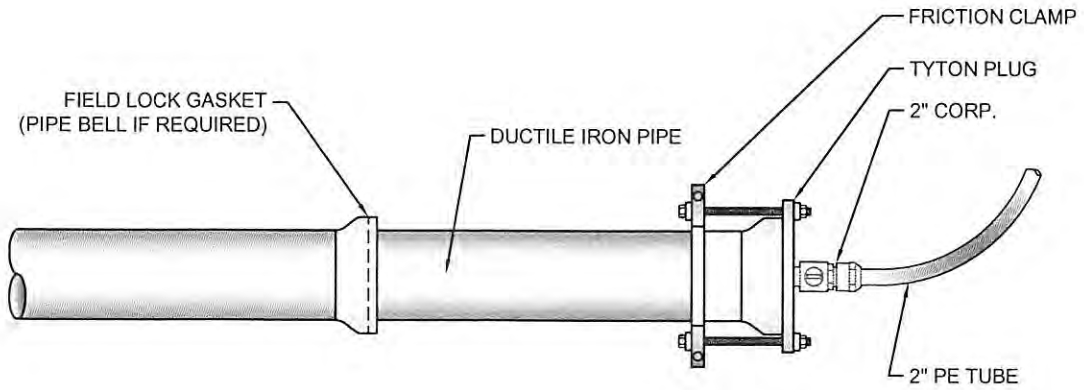

TEMPORARY PLUG
PLAN VIEW

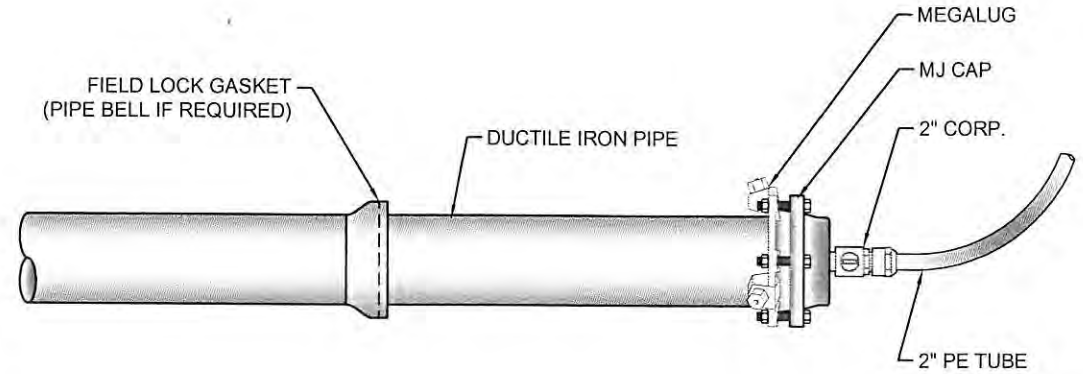

TEMPORARY END CAP
PLAN VIEW

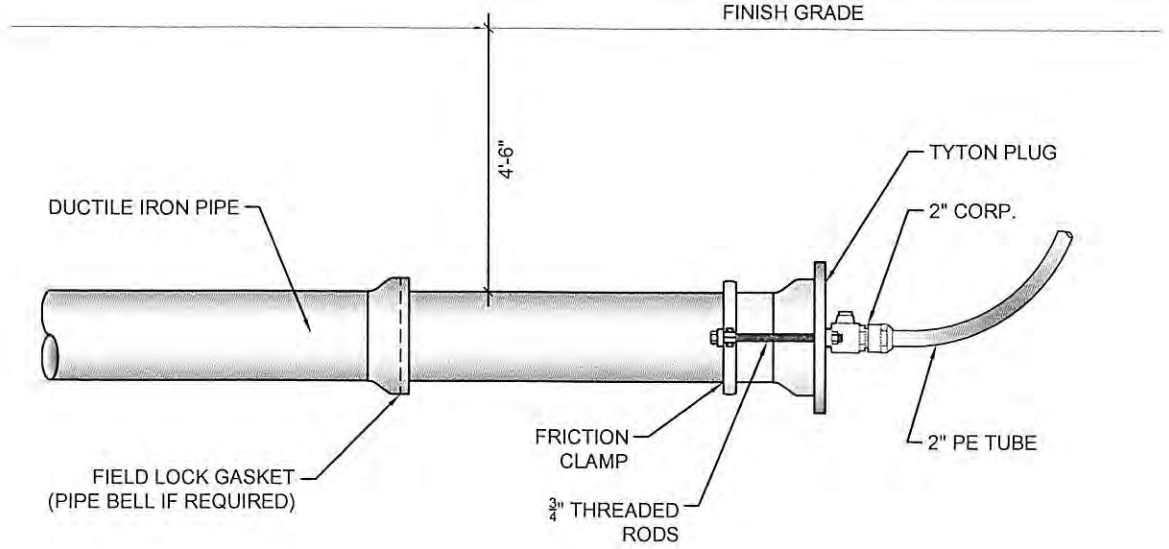

TEMPORARY PLUG
PROFILE VIEW

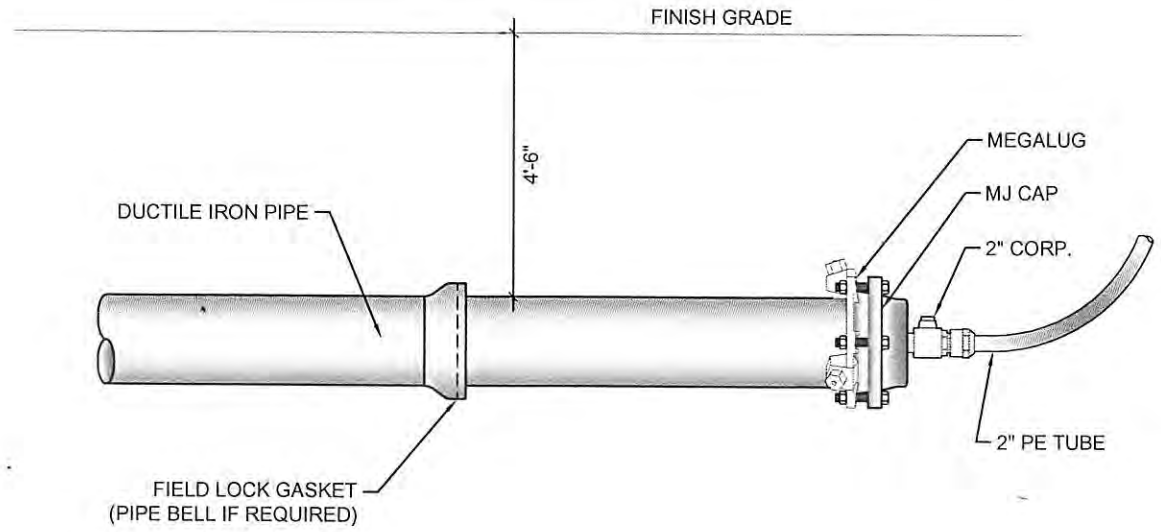

TEMPORARY END CAP
PROFILE VIEW

Providence Water

GENERAL NOTES:

1. OTHER EXISTING UTILITIES ARE NOT SHOWN. CONTRACTOR SHALL NOTIFY "DIG-SAFE" PRIOR TO COMMENCING WORK.
2. NEW WATER MAINS SHALL BE TESTED AND CHLORINATED IN ACCORDANCE WITH PROVIDENCE WATER STANDARDS AND AS DIRECTED BY PROVIDENCE WATER.
3. NEW WATER MAINS SHALL BE CEMENT-LINED DUCTILE IRON PIPE, CLASS 52, CONFORMING TO THE LATEST AWWA STANDARDS.
4. PIPE FITTINGS SHALL BE CEMENT-LINED DUCTILE IRON, CLASS 350, WITH MECHANICAL JOINT ENDS.
5. UNLESS OTHERWISE NOTED, EARTH COVER OVER PIPE SHALL NOT BE LESS THAN 4.5-FEET.
6. GATE VALVES SHALL BE RESILIENT SEAT TYPE WITH MECHANICAL JOINT ENDS AND SHALL OPEN "RIGHT" (CLOCKWISE).
7. METALLIZED, DETECTABLE, IDENTIFICATION TAPE SHALL BE 2-INCHES WIDE, BLUE IN COLOR, AND IMPRINTED WITH THE WORDS "CAUTION – WATER LINE BURIED BELOW", AND SHALL BE INSTALLED OVER ALL MAINS AND HYDRANT RUN-OUTS AT A DEPTH OF 12-INCHES BELOW FINISHED GRADE.
8. CURB STOPS SHALL BE INSTALLED 1 FT. TO 1-1/2 FT. BEHIND FACE OF CURB OR EDGE OF PAVEMENT. CURB STOPS ARE NOT TO BE INSTALLED IN EXISTING OR FUTURE DRIVEWAYS.
9. UNLESS OTHERWISE NOTED, BREAKAWAY TYPE HYDRANTS, WHERE REQUIRED, SHALL BE INSTALLED AT EXISTING LOCATIONS WITH OPERATING NUT POSITIONED 24-INCHES BEHIND FACE OF CURB OR EDGE OF PAVEMENT. THE BREAKAWAY FLANGE SHALL BE SET 2-INCHES TO 4-INCHES ABOVE FINISHED GRADE. HYDRANTS SHALL OPEN "RIGHT" (CLOCKWISE).
10. PORTLAND CEMENT CONCRETE THRUST BLOCKS AND/OR GRAVITY BLOCKS SHALL BE CONSTRUCTED IN PLACE AT CHANGES OF PIPE DIRECTION (TEES, BENDS, ETC) AND/OR DEAD ENDS IN ACCORDANCE WITH PROVIDENCE WATER STANDARDS. FURTHERMORE, MECHANICAL JOINT THRUST RESTRAINTS SHALL BE PLACED ON EACH SIDE OF IN-LINE FITTINGS OR PIPE JOINTS PRIOR TO END CAPS/PLUGS SO AS TO SUFFICIENTLY RESTRAIN AN ADEQUATE LENGTH OF PIPE AT 1-1/2 TIMES THE STATIC PRESSURE, BUT IN ANY EVENT, NOT LESS THAN 150 PSI.

TEMPORARY END CAP AND PLUG DETAIL

MAD	AMP
DRAWN BY	CHECKED BY
N.T.S.	01-06-2014
SCALE	DATE

SENIOR MANAGER OF ENGINEERING

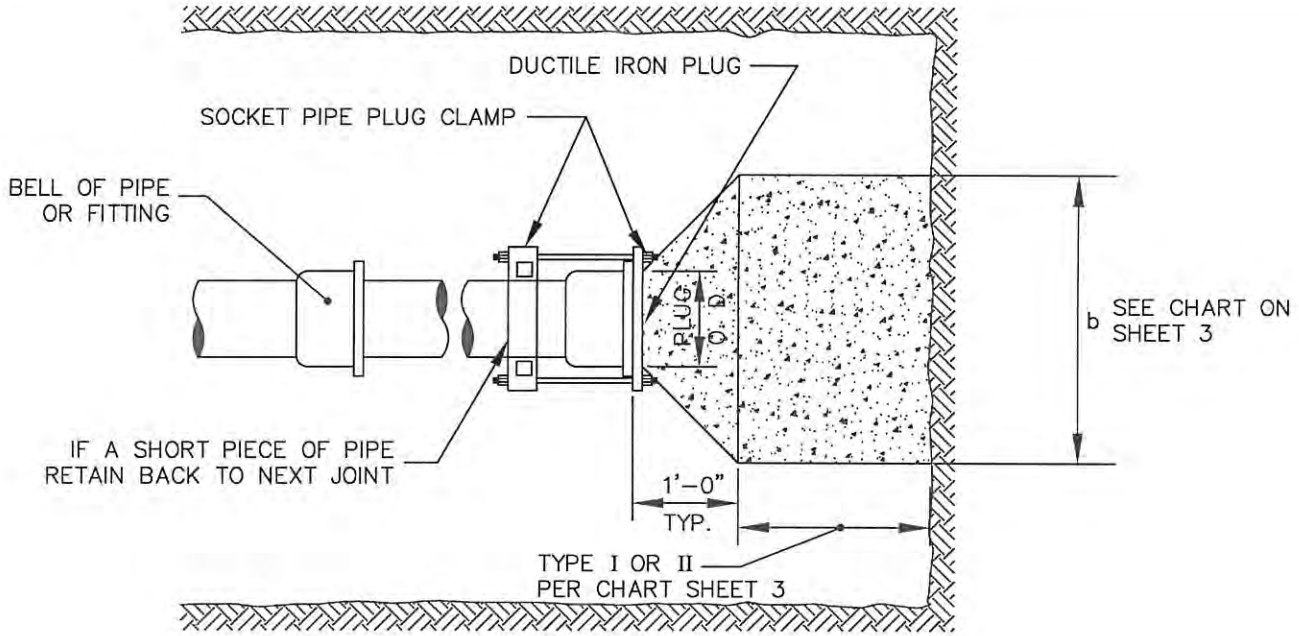

PLAN -DEAD END

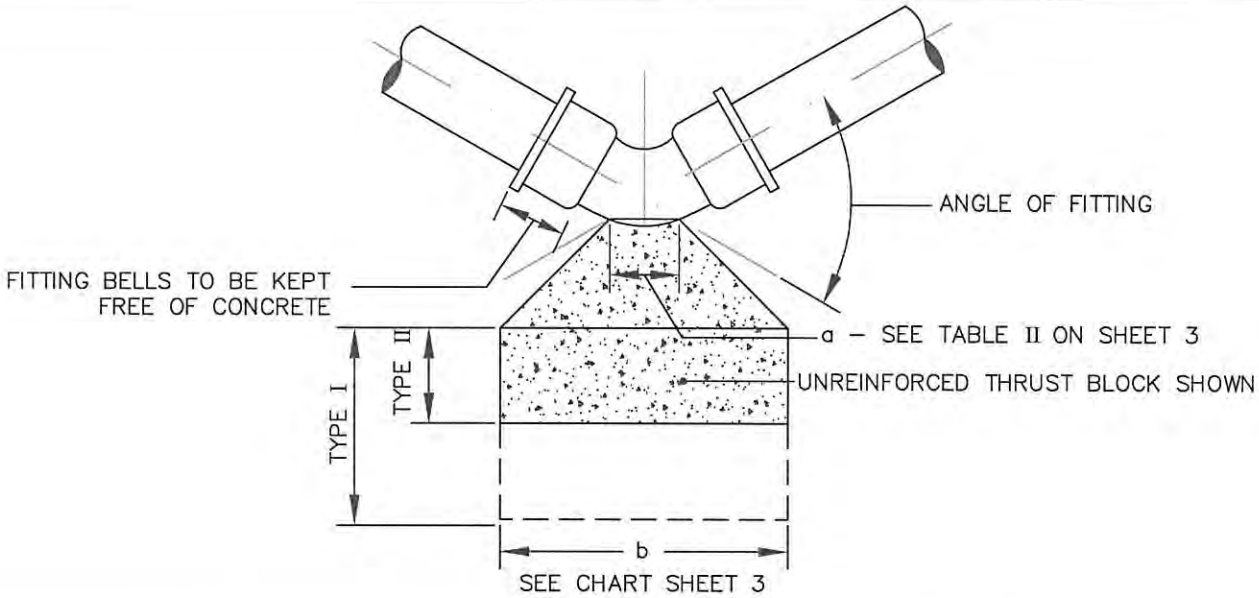

PLAN -BEND

NOTE:
SEE CHARTS - SHEET 3
& ILLUSTRATIVE
PROBLEM - SHEET 4

Senior Manager of Engineering Date

THRUST BLOCK DETAILS

NOT TO SCALE

Providence Water

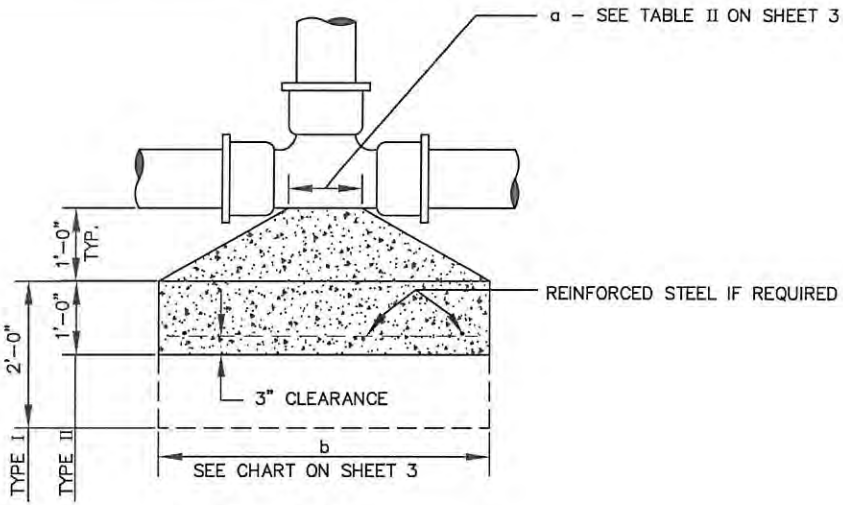

PLAN-TEE

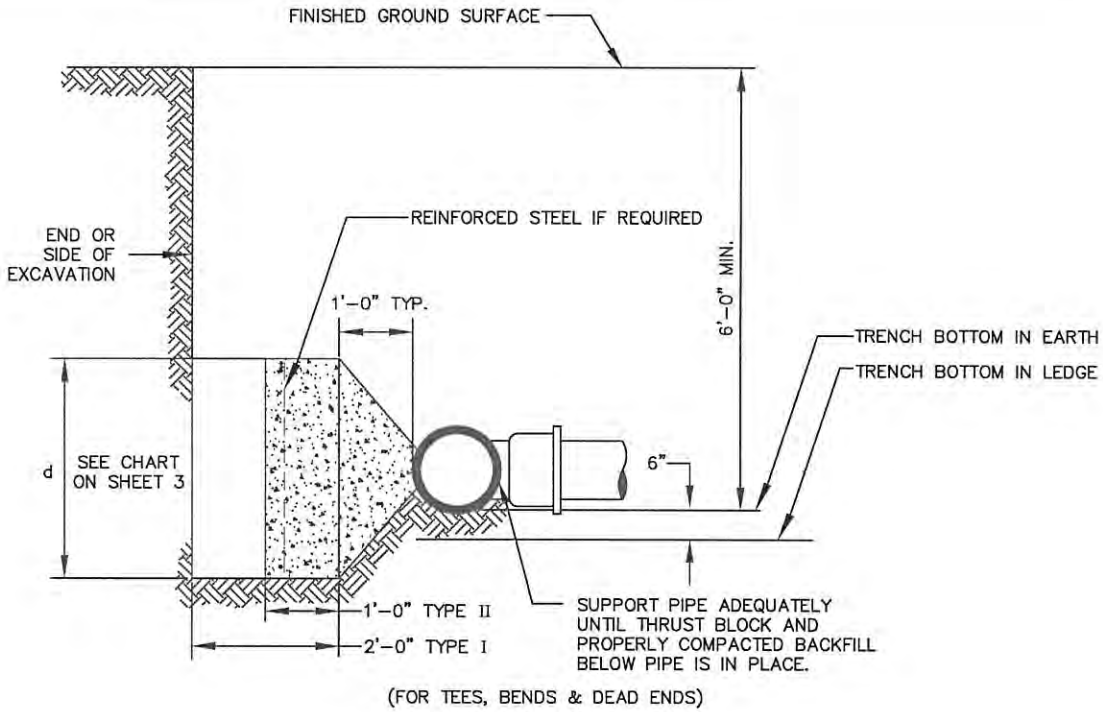

TYPICAL SECTION

NOTE:
SEE CHARTS - SHEET 3
& ILLUSTRATIVE
PROBLEM - SHEET 4

Senior Manager of Engineering Date

THRUST BLOCK DETAILS

NOT TO SCALE

Providence Water

TABLE II - "a" DIMENSION - FEET

PIPE DIAMETER - INCHES	90° FITTING	OTHERS
6, 8, 10 & 12	1 - 6	1 - 0
16 & 20	2 - 9	1 - 6
24" - 30"	3 - 0	2 - 0

TABLE I - THRUST - KIPS (WATER PRESSURE = 200 P.S.I.)

PIPE DIAMETER INCHES		6	8	10	12	16	20	24	30	36	42
DEAD ENDS AND TEES		5.6	10	15.8	22.6	40.2	62.8	90.4	141.0	203.6	277.0
ANGLE FITTINGS	90°	7.9	14.2	22.4	32.0	56.8	88.8	127.7	199.0	288.0	392.0
	67 1/2°	-	11.1	17.6	25.1	44.7	70.0	100.2	157.0	226.0	308.0
	56 1/4°	-	-	14.9	21.2	37.9	59.2	85.1	133.0	192.0	261.0
	45°	-	-	-	17.3	30.8	48.1	69.0	108.0	156.0	212.0
	33 3/4°	-	-	-	13.1	23.3	36.5	52.5	82.0	118.0	161.0
	22 1/2°	-	-	-	8.8	15.7	24.5	35.2	55.0	79.5	108.0

DESIGN THRUST BLOCKS OR OTHER SUITABLE
ANCHORAGE TO SUIT ACTUAL CONDITIONS

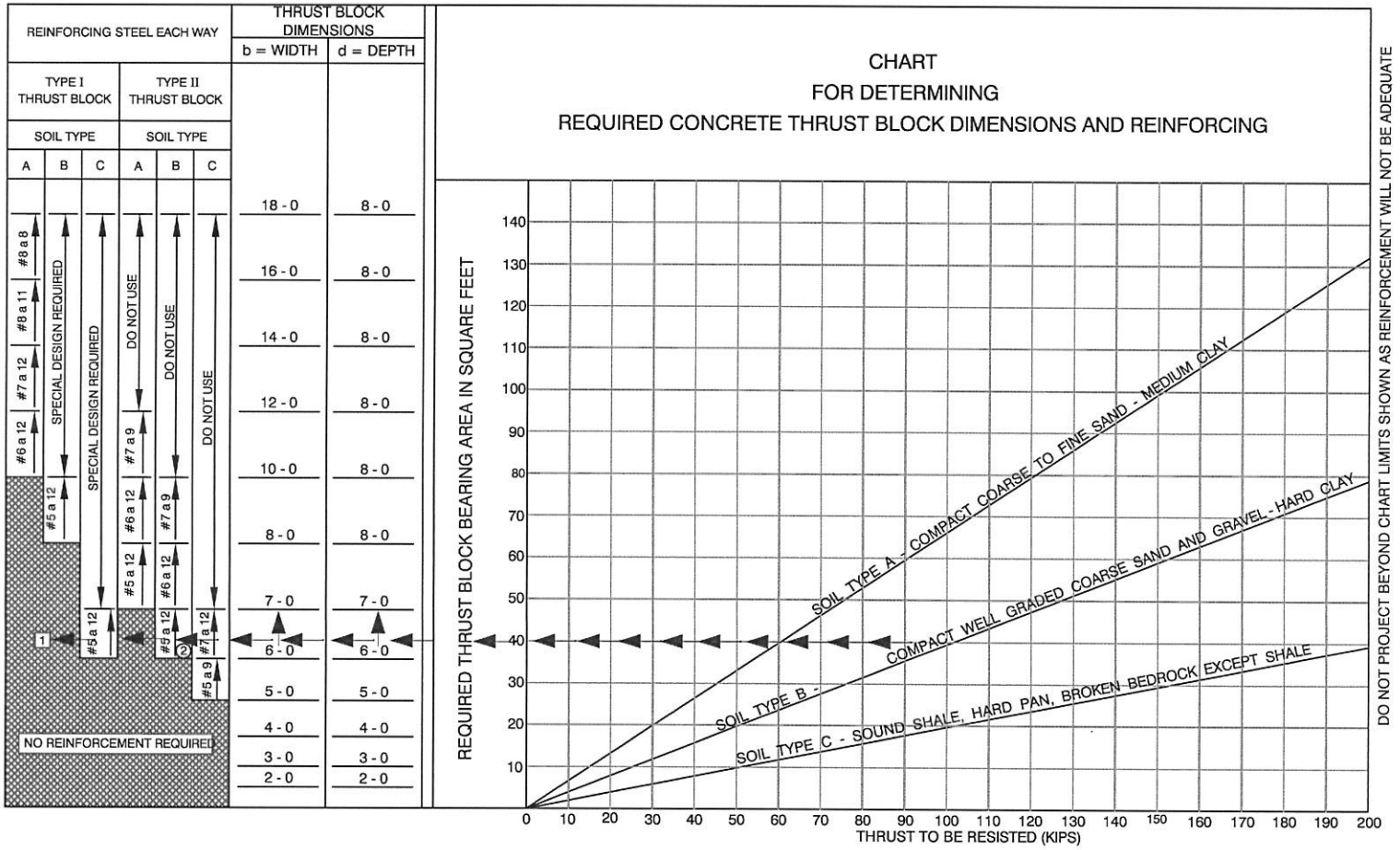

Senior Manager of Engineering Date

THRUST BLOCK TABLES

NOT TO SCALE

NOTES:

ALL FITTINGS SHALL BE ANCHORED BY MECHANICAL MEANS OR BY CONCRETE THRUST BLOCKS, OR BOTH, IF REQUIRED BY THE BOSTON WATER AND SEWER COMMISSION OR AS NOTED ON THE CONTRACT PLANS. ALL EXPOSED METAL SHALL BE PAINTED OR COATED. CONCRETE SHALL DEVELOP A MINIMUM COMPRESSIVE STRESS OF 3,000 P.S.I. AT 28 DAYS. REINFORCING STEEL SHALL BE A.S.T.M. A615 GRADE 40. WATER PRESSURE IN TABLE 1 INCLUDES WATER HAMMER ALLOWANCE.

THE ACTUAL METHOD OF RESTRAINT MUST BE DETERMINED BY ACTUAL FIELD CONDITIONS. THESE ARE TYPICAL INSTALLATIONS TO BE USED AS A GUIDE TO THE DESIGNER. FINAL DESIGNS ARE SUBJECT TO REVIEW BY BOSTON WATER AND SEWER COMMISSION.

ILLUSTRATED PROBLEM

DESIGN A THRUST BLOCK FOR A 67-1/2° BEND,
A 24-INCH DIAMETER WATER MAIN,
CARRYING A MAXIMUM PRESSURE OF 200 P.S.I.
SOIL CLASSIFIED AS A WELL GRADED
COMPACT COARSE SAND AND GRAVEL.

SOLUTION

1. ENTER TABLE I AT 24-INCH PIPE DIAMETER - GO VERTICALLY DOWN COLUMN UNTIL OPPOSITE 67-1/2° ANGLE FITTING. READ THRUST = 100.2 KIPS.
2. SEE CHART IMMEDIATELY BELOW TABLE I - SELECT SOIL TYPE CURVE REFLECTING ACTUAL SOIL CLASSIFICATION. TYPE B FOR THIS PROBLEM.
3. ENTER CHART AT THRUST TO BE RESISTED AND GO VERTICALLY TO SOIL TYPE CURVE SELECTED IN 2 ABOVE - SEE CHART AND FOLLOW ILLUSTRATIVE PROBLEM ARROW LINE FROM 100.2 KIP THRUST TO SOIL TYPE B CURVE.
4. FROM THIS INTERSECTION GO HORIZONTALLY FOLLOWING ARROW LINE TO INTERSECTION WITH REQUIRED THRUST BLOCK BEARING AREA IN SQUARE FEET - 40 SQUARE FEET MINIMUM IS REQUIRED TO RESIST THRUST.
5. CONTINUE HORIZONTALLY TO "THRUST BLOCK DIMENSIONS" COLUMN AND SELECT DIMENSIONS "b" AND "d" IMMEDIATELY ABOVE HORIZONTAL ARROW LINE PROJECTION 7' - 0" SQUARE THRUST BLOCK REQUIRED FOR THIS PROBLEM.
6. CONTINUE HORIZONTALLY TO "REINFORCING STEEL - EACH WAY" COLUMN, NOTING COLUMNS FURTHER CLASSIFICATION BY SOIL TYPE AND FOOTING TYPE (SEE "THRUST BLOCK DETAIL", FOR TYPE I AND TYPE II REQUIREMENTS.) TWO SOLUTIONS TO ILLUSTRATIVE PROBLEM ARE ACCEPTABLE:
   SOLUTION 1 - TYPE I THRUST BLOCK AND SOIL TYPE B INDICATE NO REINFORCEMENT REQUIRED.
   SOLUTION 2 - TYPE II THRUST BLOCK AND SOIL TYPE B INDICATES #5 a 12 EACH WAY REQUIRED.

Senior Manager of Engineering Date

THRUST BLOCK NOTES

NOT TO SCALE

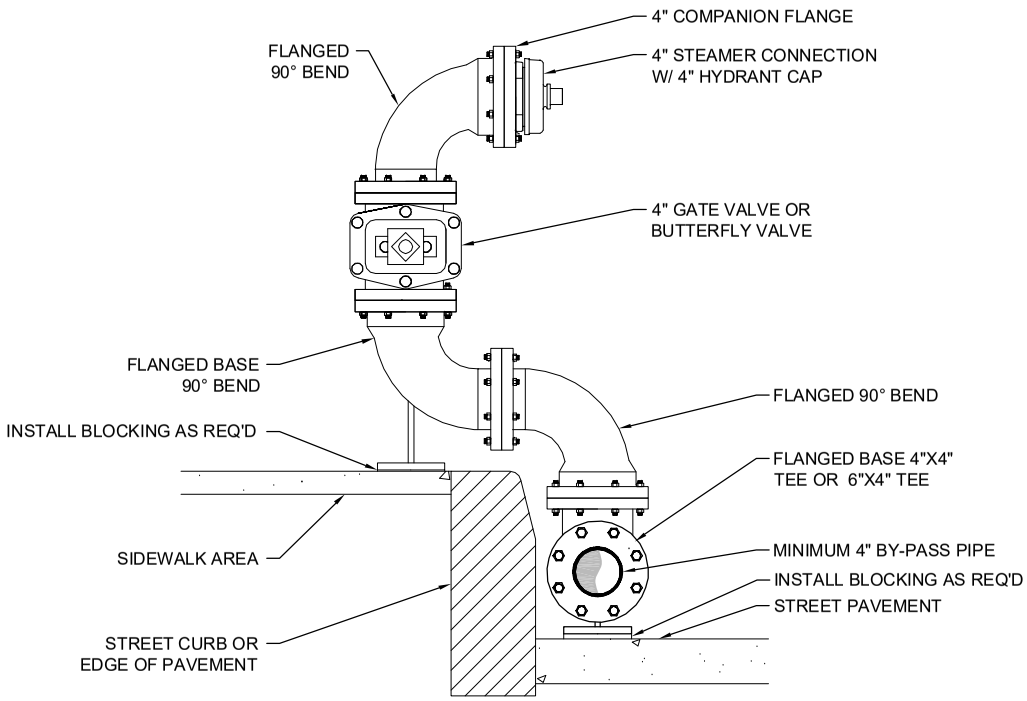

TYPICAL TEMPORARY HYDRANT DETAIL

NOT TO SCALE

Senior Manager of Engineering Date

PROVIDENCE WATER

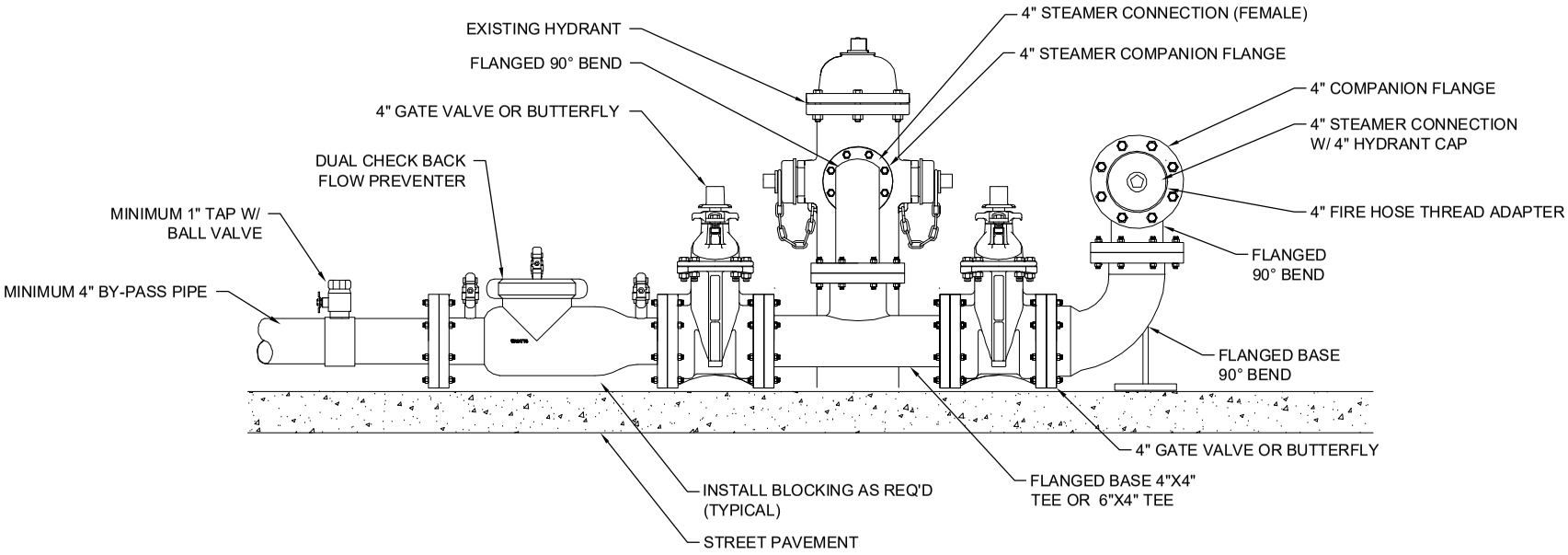

TYPICAL TEMPORARY BY-PASS FEED DETAIL

NOT TO SCALE

Senior Manager of Engineering Date

PROVIDENCE WATER

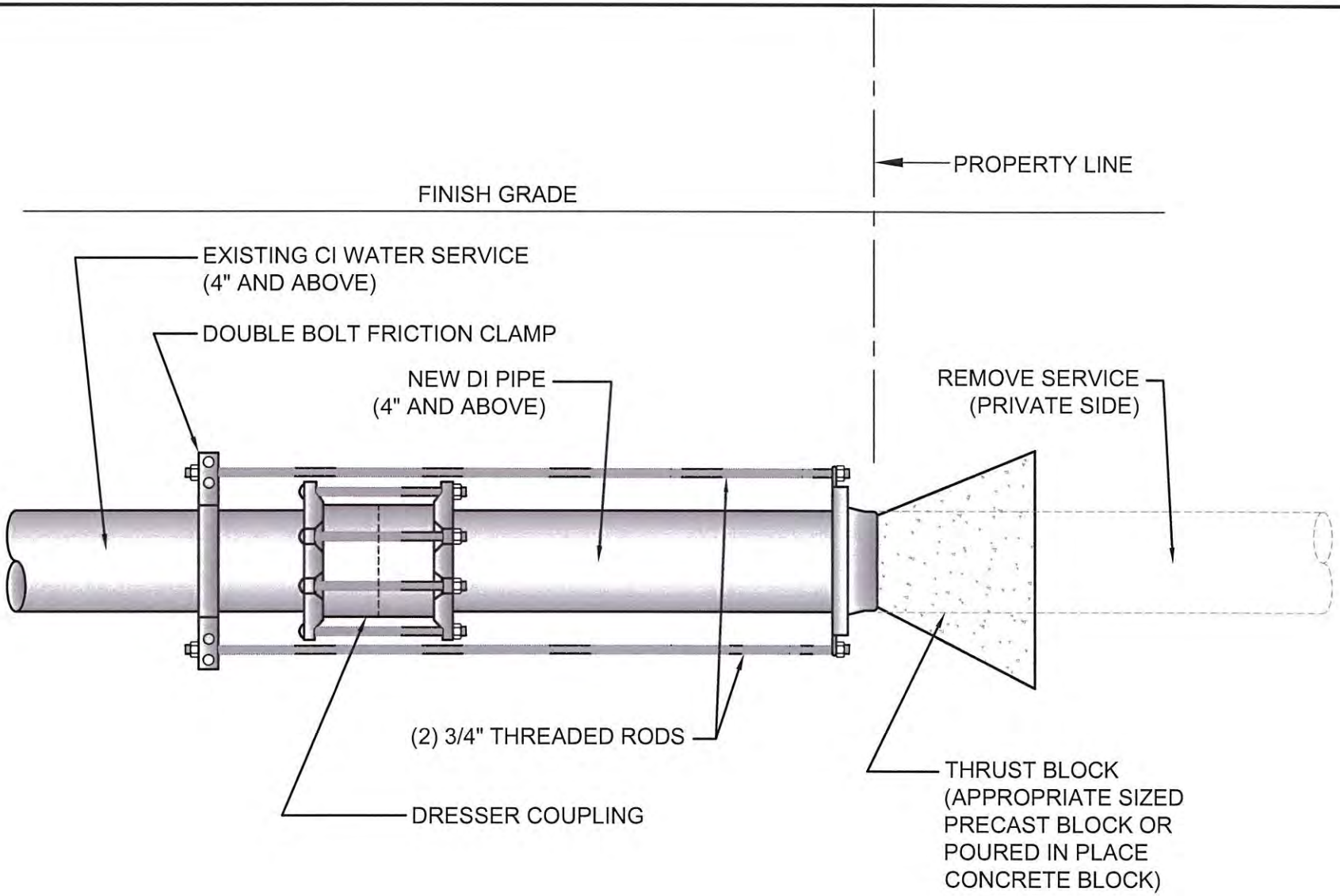

TYPICAL WATER SERVICE CUT AND CAP

NOT TO SCALE

2/6/13

Senior Manager of Engineering Date

PROVIDENCE WATER

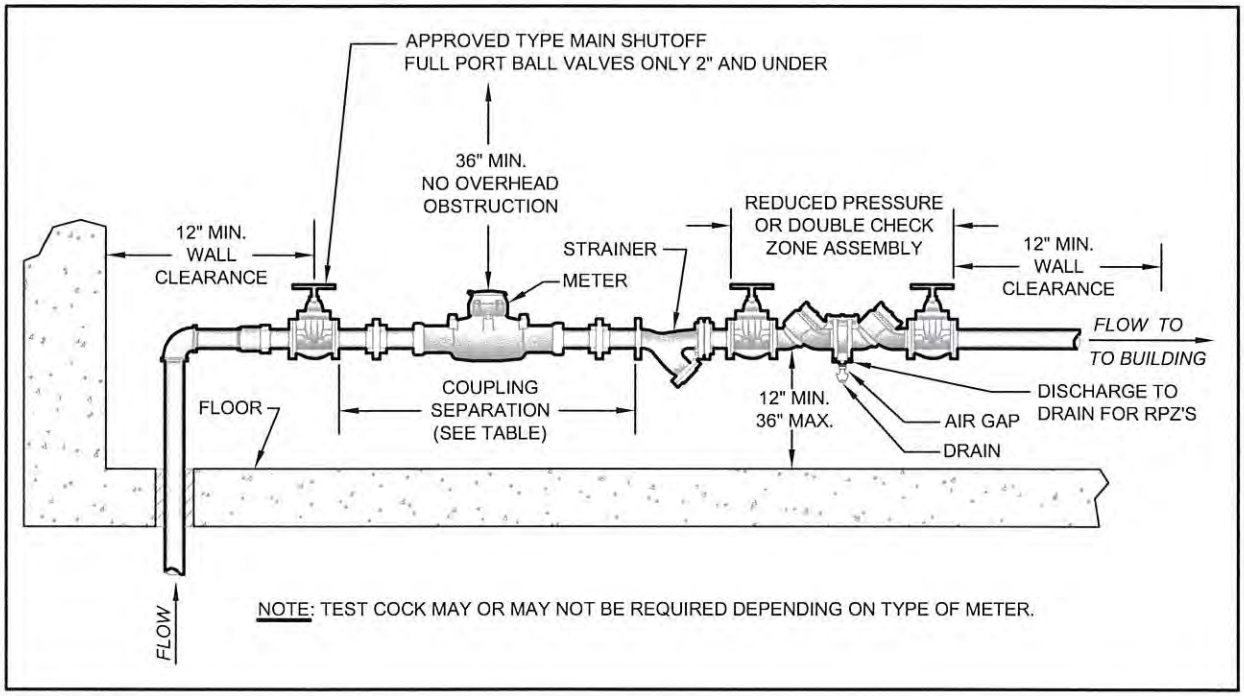

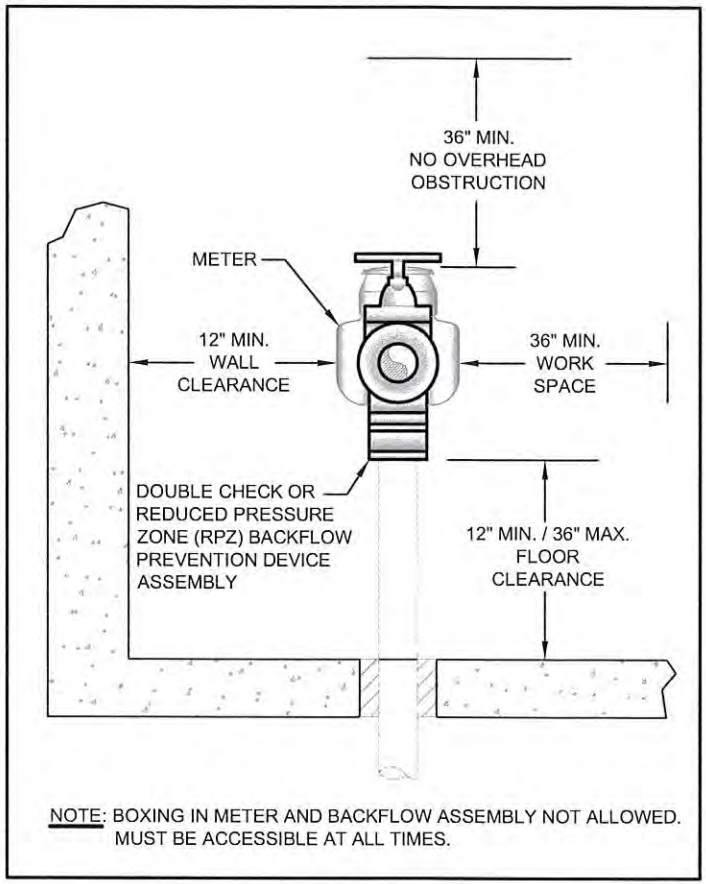

WATER METER COUPLING SEPARATION TABLE	
WATER METER SIZE (INCHES)	COUPLING SEPARATION (FEMALE PIPE THREAD TO FEMALE PIPE THREAD) (INCHES)
5/8	12
3/4	13-5/8
1	16-1/4
1-1/2	22-1/4
2	26-1/4

HORIZONTAL INSTALLATION OF REDUCED PRESSURE ZONE AND DOUBLE CHECK VALVE BACKFLOW PREVENTION ASSEMBLY

NOT TO SCALE

9-28-12

Senior Manager of Engineering Date

PROVIDENCE WATER

GENERAL NOTE:

WATER SERVICE SHALL BE KEPT AT LEAST TWENTY-FIVE (25) FEET AWAY FROM INDIVIDUAL SEWAGE DISPOSAL SYSTEM OR CESSPOOLS. LINES CLOSER THAN THE ALLOWABLE DISTANCE SHALL BE ENCASED IN SCHEDULE 40 PVC PIPE. INTERMEDIATE JOINTS SHALL BE JOINED TOGETHER AND SEALED TO FORM A WATER TIGHT CONNECTION. END SECTIONS SHALL BE FITTED WITH MECHANICAL DEVICE TO MAKE THE SPACE BETWEEN SERVICE PIPE AND ENCASEMENT WATER TIGHT.

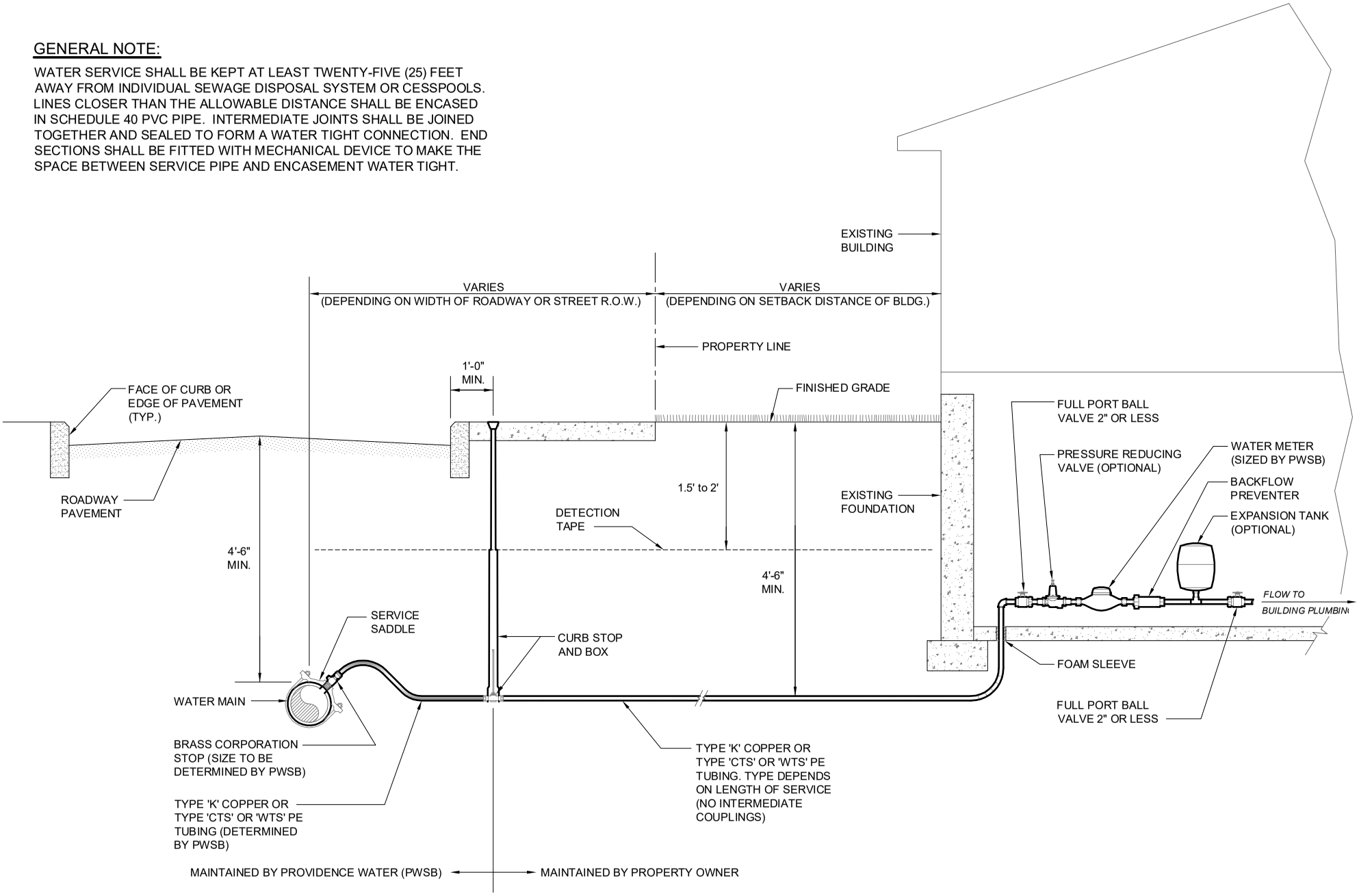

RESIDENTIAL WATER SERVICE CONNECTION SCHEMATIC - ELEVATION VIEW

NOT TO SCALE

9-28-12

Senior Manager of Engineering Date

PROVIDENCE WATER

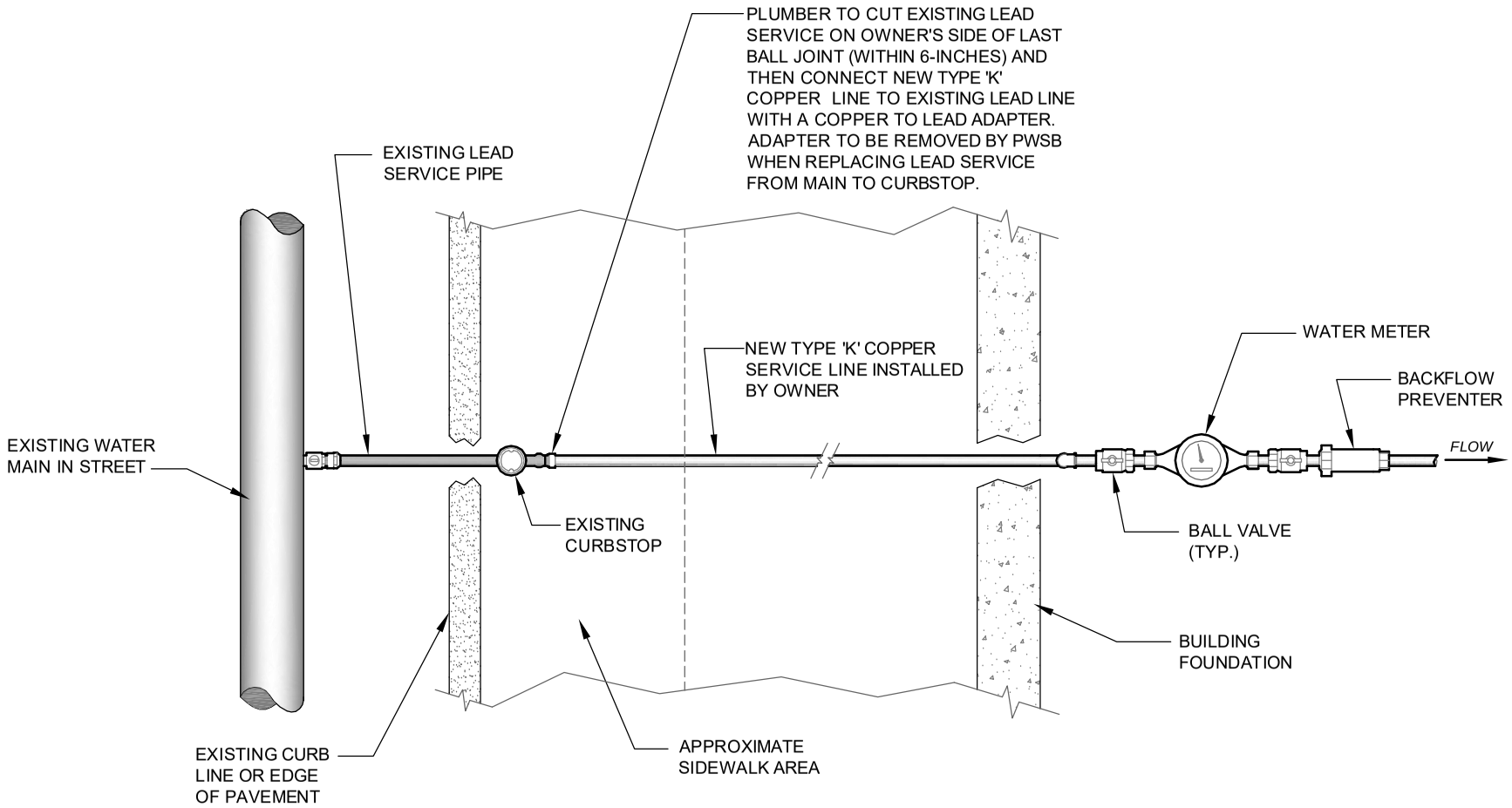

OWNER'S SIDE LEAD SERVICE REPLACEMENT SCHEMATIC - PLAN VIEW

NOT TO SCALE

9-28-12

Senior Manager of Engineering Date

PROVIDENCE WATER

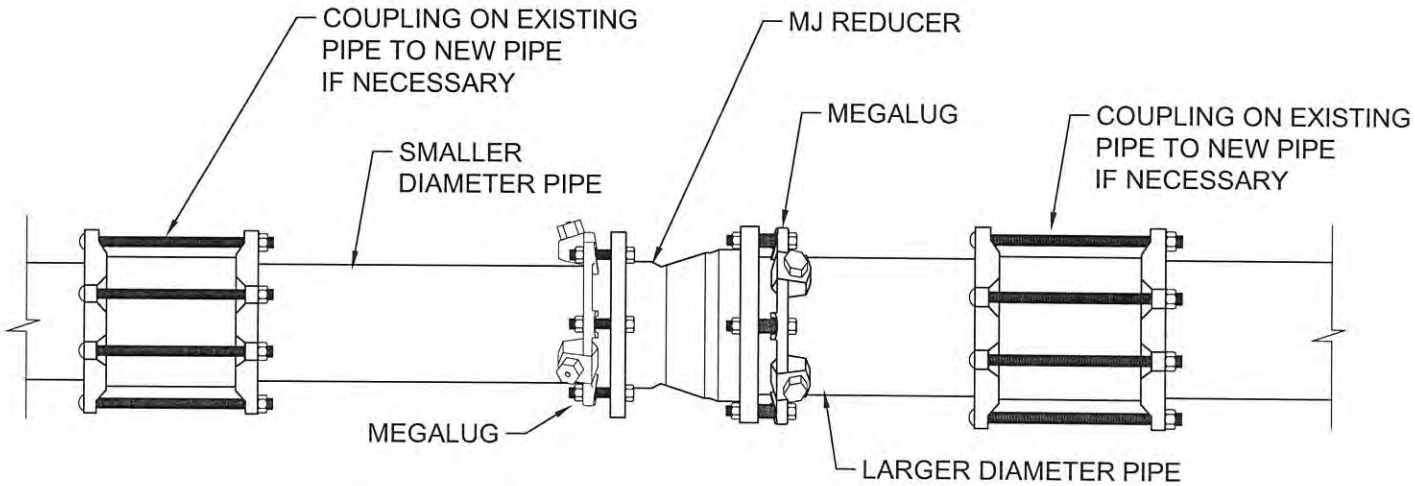

*PIPE RESTRAINT MUST MEET PWSB RESTRAINT GUIDELINES

TYPICAL REDUCER INSTALLATION

NOT TO SCALE

Director of Engineering 5-15-18 Date

PROVIDENCE WATER

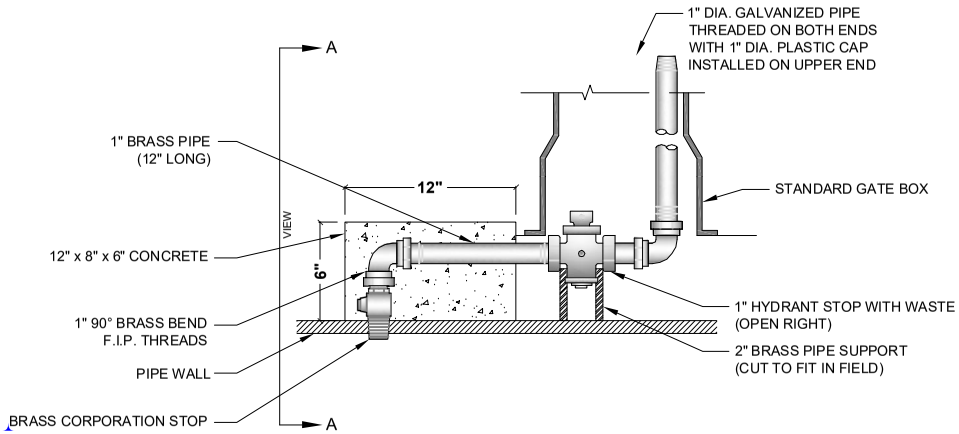

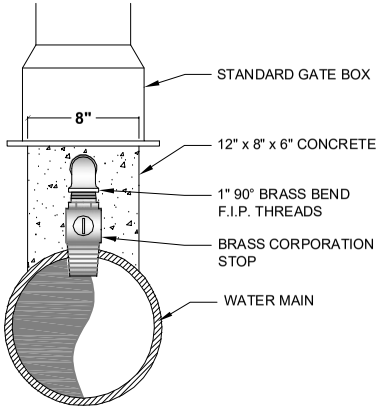

SECTION A-A

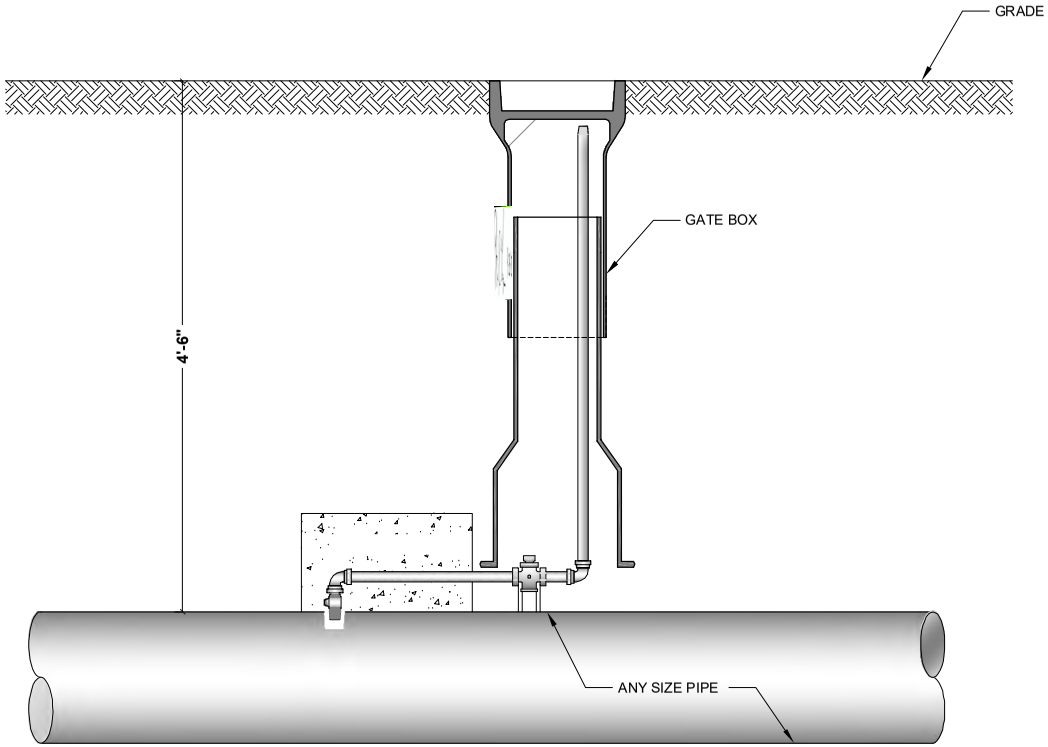

AIR RELEASE

NOT TO SCALE

Senior Manager of Engineering Date

PROVIDENCE WATER

APPENDIX C

RI DWSRF Program Contract Specifications Package

Rhode Island Department of Health
Center for Drinking Water Quality

Drinking Water State Revolving Fund Program
Contract Specifications Package

A. Federal

1) Equal Employment Opportunity and Affirmative Action (Executive Order 11246)
   i) OFCCP fact sheet.
   ii) Equal Opportunity Clause and the Standard Federal Equal Employment Specifications.
   iii) Notice of Non-Discrimination in Employment.

2) Non-discrimination in employment notice.

3) Assurance of compliance with Title VI of the Civil Rights Act of 1964 and Section 13 of the FWPCA Amendments of 1972 (EPA form 4700-1).

4) Affirmative steps for soliciting MBE/WBE (40 CFR 31.36(e))

Applicable cross-cutting Federal authorities for projects funded through SRF programs are made available at http://water.epa.gov/grants_funding/dwsrf/xcuts.cfm. Additional information is provided in the United States Environmental Protection Agency's cross-cutting handbook available at https://www.epa.gov/sites/production/files/2015-08/documents/crosscutterhandbook.pdf .

B. State of Rhode Island

1) RIGL 37-2.1, Domestic Steel

2) RIGL 37-12, Contractors Bonds

3) RIGL 37-12.1, Substitution of Security for Retained Earnings of Architects and Engineers.

4) RIGL 37-13, Labor and Payment of Debts by Contractors
   i) Prevailing Wage Rates

5) RIGL 37-14.1, Minority Business Enterprise
   i) Regulations Governing Participation by Minority Business Enterprises in State Funded and Directed Public Construction Projects, Construction Contracts and Procurement Contracts Goods and Services.

6) RIGL 37-16, Public Works Arbitration

7) RIGL 45-55, Award of Municipal Contracts

NOTE: This package is prepared by DOH as a service of the DWSRF program. While every attempt at accuracy has been made, these are not certified true copies of the laws presented. **The responsibility for compliance with all applicable provisions of Federal and State laws and regulations relating to the bidding, award, and performance of contracts is the applicant's and the bidder's**. Certified true and complete copies of any Rhode Island laws and regulations may be obtained from the Office of the Secretary of State.

Employment Standards Administration
Office of Federal Contract Compliance Programs

Fact Sheet
EXECUTIVE ORDER 11246

EEO and Affirmative Action Guidelines for Federal Contractors Regarding Race, Color, Gender, Religion, and National Origin.

BASIC PROVISIONS

Since 1965, the U.S. Department of Labor's Office of Federal Contract Compliance Programs (OFCCP) has been committed to ensuring that Government contractors comply with the equal employment opportunity (EEO) and the affirmative action provisions of their contracts.

OFCCP administers and enforces Executive Order 11246, as amended, which prohibits federal contractors and federally-assisted construction contractors and subcontractors, who do over $10,000 in Government business in one year from discriminating in employment decisions on the basis of race, color, religion, sex, sexual orientation, gender identity, or national origin.

The Executive Order also requires Government contractors to take affirmative action to insure that equal opportunity is provided in all aspects of their employment.

AFFIRMATIVE ACTION REQUIREMENTS

Each Government contractor with 50 or more employees and $50,000 or more in government contracts is required to develop a written affirmative action program (AAP) for each of its establishments.

A written affirmative action program helps the contractor identify and analyze potential problems in the participation and utilization of women and minorities in the contractor's workforce.

If there are problems, the contractor will specify in its AAP the specific procedures it will follow and the good faith efforts it will make to provide equal employment opportunity.

Expanded efforts in outreach, recruitment, training and other areas are some of the affirmative steps contractors can take to help members of the protected groups compete for jobs on equal footing with other applicants and employees.

Affirmative action is not preferential treatment. It does not mean that unqualified persons should be hired or promoted over other people. What affirmative action does mean is that positive steps must be taken to ensure equal employment opportunity for traditionally disadvantaged groups.

ENFORCEMENT AND COMPLIANCE

Compliance Reviews

OFCCP conducts compliance reviews to investigate the employment practices of Government contractors. During a compliance review, a compliance officer examines the contractor's affirmative action program; checks personnel, payroll, and other employment records; interviews employees and company officials; and investigates virtually all aspects of employment in the company.
The investigator also checks to see whether the contractor is making special efforts to achieve equal opportunity through affirmative action. If problems are discovered, OFCCP will recommend corrective action and suggest ways to achieve equal employment opportunity.

Complaint Investigations

Individuals may file complaints if they believe they have been discriminated against by federal contractors or subcontractors. Complaints also may be filed by organizations on behalf of the person or persons affected.

Complaints must be filed within 180 days from the date of the alleged discrimination, although filing time can be extended for a good reason.

If a complaint filed under Executive Order 11246 involves discrimination against only one person, OFCCP will normally refer it to the EEOC. Cases involving groups of people or indicating patterns of discrimination are generally investigated and resolved by OFCCP. Complaints may be filed directly with any of OFCCP's regional or district offices throughout the country, or with OFCCP in Washington, D.C.

Compliance Assistance

To help contractors understand their contractual obligations for EEO and affirmative action, OFCCP provides technical assistance. District office staff offers guidance to contractors on how to develop an affirmative program through company seminars, training programs held in conjunction with industry liaison groups, and one-on-one consultations on affirmative action practices and procedures.

Enforcing Contract Compliance

When a compliance review discloses problems, OFCCP attempts to work with the contractor, often entering into a conciliation agreement. A conciliation agreement may include back pay, job offers, seniority credit, promotions or other forms of relief for victims of discrimination. It may also involve new training programs, special recruitment efforts, or other affirmative action measures.

When conciliation efforts are unsuccessful, OFCCP refers the case to the Office of the Solicitor for enforcement through administrative enforcement proceedings. A contractor cited for violating EEO and affirmative action requirements may have a formal hearing before an administrative law judge.

If conciliation is not reached before or after the hearing, sanctions may be imposed. For example, a contractor could lose its government contracts or subcontracts or be debarred, i.e., declared ineligible for any future government contracts.

Further Information

For more information about contact compliance, filing complaints, or compliance assistance, contact any of OFCCP's regional or district offices. All offices are listed in telephone directories under U.S. Department of Labor, Employment Standards Administration, Office of Federal Contract Compliance Programs.

EQUAL EMPLOYMENT OPPORTUNITY AND AFFIRMATIVE ACTION

Executive Order 11246

(Excerpts from 41 CFR 60 Parts 1 and 4)

41 CFR 60-1.4 - Equal opportunity clause

(b) Federally assisted construction contracts. Except as otherwise provided, each administering agency shall require the inclusion of the following language as a condition of any grant, contract, loan, insurance, or guarantee involving federally assisted construction which is not exempt from the requirements of the equal opportunity clause:

The applicant hereby agrees that it will incorporate or cause to be incorporated into any contract for construction work, or modification thereof, as defined in the regulations of the Secretary of Labor at 41 CFR Chapter 60, which is paid for in whole or in part with funds obtained from the Federal Government or borrowed on the credit of the Federal Government pursuant to a grant, contract, loan insurance, or guarantee, or undertaken pursuant to any Federal program involving such grant, contract, loan, insurance, or guarantee, the following *equal opportunity clause*:

During the performance of this contract, the contractor agrees as follows:

(1) The contractor will not discriminate against any employee or applicant for employment because of race, color, religion, sex, sexual orientation, gender identity, or national origin. The contractor will take affirmative action to ensure that applicants are employed, and that employees are treated during employment without regard to their race, color, religion, sex, or national origin. Such action shall include, but not be limited to the following: Employment, upgrading, demotion, or transfer; recruitment or recruitment advertising; layoff or termination; rates of pay or other forms of compensation; and selection for training, including apprenticeship. The contractor agrees to post in conspicuous places, available to employees and applicants for employment, notices to be provided setting forth the provisions of this nondiscrimination clause. Such action shall include but not be limited to the following:

(2) Employment, upgrading, demotion, or transfer; recruitment or recruitment advertising; layoff or termination; rates of pay or other forms of compensation; and selection for training, including apprenticeship. The contractor agrees to post in conspicuous places, available to employees and applicants for employment, notices to be provided setting forth the provisions of this nondiscrimination clause. The contractor will, in all solicitations or advertisements for employees placed by or on behalf of the contractor, state that all qualified applicants will receive considerations for employment without regard to race, color, religion, sex, sexual orientation, gender identity, or national origin.

(3) The contractor will not discharge or in any other manner discriminate against any employee or applicant for employment because such employee or applicant has inquired about, discussed, or disclosed the compensation of the employee or applicant or another employee or applicant. This provision shall not apply to instances in which an employee who has access to the compensation information of other employees or applicants as a part of such employee's essential job functions discloses the compensation of such other employees or applicants to individuals who do not otherwise have access to such information, unless such disclosure is in response to a formal complaint or charge, in furtherance of an investigation, proceeding, hearing, or action, including an investigation conducted by the employer, or is consistent with the contractor's legal duty to furnish information.

(4) The contractor will send to each labor union or representative of workers with which he has a collective bargaining agreement or other contract or understanding, a notice to be provided advising the said labor union or workers' representatives of the contractor's commitments under this section, and shall post copies of the notice in conspicuous places available to employees and applicants for employment.

(5) The contractor will comply with all provisions of Executive Order 11246 of September 24, 1965, and of the rules, regulations, and relevant orders of the Secretary of Labor.

(6) The contractor will furnish all information and reports required by Executive Order 11246 of September 24, 1965, and by rules, regulations, and orders of the Secretary of Labor, or pursuant thereto, and will

permit access to his books, records, and accounts by the administering agency and the Secretary of Labor for purposes of investigation to ascertain compliance with such rules, regulations, and orders.

(7) In the event of the contractor's noncompliance with the nondiscrimination clauses of this contract or with any of the said rules, regulations, or orders, this contract may be canceled, terminated, or suspended in whole or in part and the contractor may be declared ineligible for further Government contracts or federally assisted construction contracts in accordance with procedures authorized in Executive Order 11246 of September 24, 1965, and such other sanctions may be imposed and remedies invoked as provided in Executive Order 11246 of September 24, 1965, or by rule, regulation, or order of the Secretary of Labor, or as otherwise provided by law.

(8) The contractor will include the portion of the sentence immediately preceding paragraph (1) and the provisions of paragraphs (1) through (8) in every subcontract or purchase order unless exempted by rules, regulations, or orders of the Secretary of Labor issued pursuant to section 204 of Executive Order 11246 of September 24, 1965, so that such provisions will be binding upon each subcontractor or vendor. The contractor will take such action with respect to any subcontract or purchase order as the administering agency may direct as a means of enforcing such provisions, including sanctions for noncompliance:

Provided, however, that in the event a contractor becomes involved in, or is threatened with, litigation with a subcontractor or vendor as a result of such direction by the administering agency the contractor may request the United States to enter into such litigation to protect the interests of the United States.

The applicant further agrees that it will be bound by the above equal opportunity clause with respect to its own employment practices when it participates in federally assisted construction work: Provided, that if the applicant so participating is a State or local government, the above equal opportunity clause is not applicable to any agency, instrumentality or subdivision of such government which does not participate in work on or under the contract.

The applicant agrees that it will assist and cooperate actively with the administering agency and the Secretary of Labor in obtaining the compliance of contractors and subcontractors with the equal opportunity clause and the rules, regulations, and relevant orders of the Secretary of Labor, that it will furnish the administering agency and the Secretary of Labor such information as they may require for the supervision of such compliance, and that it will otherwise assist the administering agency in the discharge of the agency's primary responsibility for securing compliance.

The applicant further agrees that it will refrain from entering into any contract or contract modification subject to Executive Order 11246 of September 24, 1965, with a contractor debarred from, or who has not demonstrated eligibility for, Government contracts and federally assisted construction contracts pursuant to the Executive order and will carry out such sanctions and penalties for violation of the equal opportunity clause as may be imposed upon contractors and subcontractors by the administering agency or the Secretary of Labor pursuant to Part II, Subpart D of the Executive order. In addition, the applicant agrees that if it fails or refuses to comply with these undertakings, the administering agency may take any or all of the following actions: Cancel, terminate, or suspend in whole or in part this grant (contract, loan, insurance, guarantee); refrain from extending any further assistance to the applicant under the program with respect to which the failure or refund occurred until satisfactory assurance of future compliance has been received from such applicant; and refer the case to the Department of Justice for appropriate legal proceedings.

(c) *Subcontracts*. Each nonexempt prime contractor or subcontractor shall include the equal opportunity clause in each of its nonexempt subcontracts.

(d) *Incorporation of the equal opportunity clause by reference*. The equal opportunity clause may be incorporated by reference in all Government contracts and subcontracts, including Government bills of lading, transportation requests, contracts for deposit of Government funds, and contracts for issuing and paying U.S. savings bonds and notes, and such other contracts and subcontracts as the Director may designate.

(e) *Incorporation by operation of the order*. By operation of the order, the equal opportunity clause shall be considered to be a part of every contract and subcontract required by the order and the regulations in this part to include such a clause whether or not it is physically incorporated in such contracts and whether or not the contract between the agency and the contractor is written.

(f) Adaptation of language. Such necessary changes in language may be made in the equal opportunity clause as shall be appropriate to identify properly the parties and their undertakings.

41 CFR 60-4.3 - Equal opportunity clauses

(a) The equal opportunity clause published at 41 CFR 60-1.4(a) of this chapter is required to be included in, and is part of, all nonexempt Federal contracts and subcontracts, including construction contracts and subcontracts. The equal opportunity clause published at 41 CFR 60-1.4(b) is required to be included in, and is a part of, all nonexempt federally assisted construction contracts and subcontracts. In addition to the clauses described above, all Federal contracting officers, all applicants and all non-construction contractors, as applicable, shall include the specifications set forth in this section in all Federal and federally assisted construction contracts in excess of $10,000 to be performed in geographical areas designated by the Director pursuant to 60-4.6 of this part and in construction subcontracts in excess of $10,000 necessary in whole or in part to the performance of non-construction Federal contracts and subcontracts covered under the Executive order.

Standard Federal Equal Employment Opportunity Construction Contract Specifications (Executive Order 11246)

1. As used in these specifications:
   a. "Covered area" means the geographical area described in the solicitation from which this contract resulted;
   b. "Director" means Director, Office of Federal Contract Compliance Programs, United States Department of Labor, or any person to whom the Director delegates authority;
   c. "Employer identification number" means the Federal Social Security number used on the Employer's Quarterly Federal Tax Return, U.S. Treasury Department Form 941.
   d. "Minority" includes:
      (i) Black (all persons having origins in any of the Black African racial groups not of Hispanic origin);
      (ii) Hispanic (all persons of Mexican, Puerto Rican, Cuban, Central or South American or other Spanish Culture or origin, regardless of race);
      (iii) Asian and Pacific Islander (all persons having origins in any of the original peoples of the Far East, Southeast Asia, the Indian Subcontinent, or the Pacific Islands); and
      (iv) American Indian or Alaskan Native (all persons having origins in any of the original peoples of North America and maintaining identifiable tribal affiliations through membership and participation or community identification).

2. Whenever the Contractor, or any Subcontractor at any tier, subcontracts a portion of the work involving any construction trade, it shall physically include in each subcontract in excess of $10,000 the provisions of these specifications and the Notice which contains the applicable goals for minority and female participation and which is set forth in the solicitations from which this contract resulted.

3. If the Contractor is participating (pursuant to 41 CFR 60-4.5) in a Hometown Plan approved by the U.S. Department of Labor in the covered area either individually or through an association, its affirmative action obligations on all work in the Plan area (including goals and timetables) shall be in accordance with that Plan for those trades which have unions participating in the Plan. Contractors must be able to demonstrate their participation in and compliance with the provisions of any such Hometown Plan. Each Contractor or Subcontractor participating in an approved Plan is individually required to comply with its obligations under the EEO clause, and to make a good faith effort to achieve each goal under the Plan in each trade in which it has employees. The overall good faith performance by other Contractors or Subcontractors toward a goal in an approved Plan does not excuse any covered Contractor's or Subcontractor's failure to take good faith efforts to achieve the Plan goals and timetables.

4. The Contractor shall implement the specific affirmative action standards provided in paragraphs 7 a through p of these specifications. The goals set forth in the solicitation from which this contract resulted are expressed as percentages of the total hours of employment and training of minority and female utilization the Contractor should reasonably be able to achieve in each construction trade in which it has employees in the covered area. Covered Construction contractors performing construction work in geographical areas where they do not have a Federal or federally assisted construction contract shall apply the minority and female goals established for the geographical area where the work is being performed. Goals are published periodically in the Federal Register in notice form, and such notices may be obtained from any Office of Federal Contract Compliance Programs office or from Federal procurement contracting officers. The Contractor is expected to make substantially uniform progress in meeting its goals in each craft during the period specified.

5. Neither the provisions of any collective bargaining agreement, nor the failure by a union with whom the Contractor has a collective bargaining agreement, to refer either minorities or women shall excuse the Contractor's obligations under these specifications, Executive Order 11246, or the regulations promulgated pursuant thereto.

6. In order for the non-working training hours of apprentices and trainees to be counted in meeting the goals, such apprentices and trainees must be employed by the Contractor during the training period, and the Contractor must have made a commitment to employ the apprentices and trainees at the completion of their training, subject to the availability of employment opportunities. Trainees must be trained pursuant to training programs approved by the U.S. Department of Labor.

7. The Contractor shall take specific affirmative actions to ensure equal employment opportunity. The evaluation of the Contractor's compliance with these specifications shall be based upon its effort to achieve maximum results from its actions. The Contractor shall document these efforts fully, and shall implement affirmative action steps at least as extensive as the following:

   a. Ensure and maintain a working environment free of harassment, intimidation, and coercion at all sites, and in all facilities at which the Contractor's employees are assigned to work. The Contractor, where possible, will assign two or more women to each construction project. The Contractor shall specifically ensure that all foremen, superintendents, and other on-site supervisory personnel are aware of and carry out the Contractor's obligation to maintain such a working environment, with specific attention to minority or female individuals working at such sites or in such facilities.
   b. Establish and maintain a current list of minority and female recruitment sources, provide written notification to minority and female recruitment sources and to community organizations when the Contractor or its unions have employment opportunities available, and maintain a record of the organizations' responses.
   c. Maintain a current file of the names, addresses and telephone numbers of each minority and female off-the-street applicant and minority or female referral from a union, a recruitment source or community organization and of what action was taken with respect to each such individual. If such individual was sent to the union hiring hall for referral and was not referred back to the Contractor by the union or, if referred, not employed by the Contractor, this shall be documented in the file with the reason therefor, along with whatever additional actions the Contractor may have taken.
   d. Provide immediate written notification to the Director when the union or unions with which the Contractor has a collective bargaining agreement has not referred to the Contractor a minority person or woman sent by the Contractor, or when the Contractor has other information that the union referral process has impeded the Contractor's efforts to meet its obligations.
   e. Develop on-the-job training opportunities and/or participate in training programs for the area which expressly include minorities and women, including upgrading programs and apprenticeship and trainee programs relevant to the Contractor's employment needs, especially those programs funded or approved by the Department of Labor. The Contractor shall provide notice of these programs to the sources compiled under 7b above.
   f. Disseminate the Contractor's EEO policy by providing notice of the policy to unions and training programs and requesting their cooperation in assisting the Contractor in meeting its EEO obligations; by including it in any policy manual and collective bargaining agreement; by publicizing it in the company newspaper, annual report, etc.; by specific review of the policy with all management personnel and with all minority and female employees at least once a year; and by posting the company EEO policy on bulletin boards accessible to all employees at each location where construction work is performed.
   g. Review, at least annually, the company's EEO policy and affirmative action obligations under these specifications with all employees having any responsibility for hiring, assignment, layoff, termination or other employment decisions including specific review of these items with onsite supervisory personnel such as Superintendents, General Foremen, etc., prior to the initiation of construction work at any job site. A written record shall be made and maintained identifying the time and place of these meetings, persons attending, subject matter discussed, and disposition of the subject matter.
   h. Disseminate the Contractor's EEO policy externally by including it in any advertising in the news media, specifically including minority and female news media, and providing written notification to and discussing the Contractor's EEO policy with other Contractors and Subcontractors with whom the Contractor does or anticipates doing business.
   i. Direct its recruitment efforts, both oral and written, to minority, female and community organizations, to schools with minority and female students and to minority and female recruitment and training organizations

serving the Contractor's recruitment area and employment needs. Not later than one month prior to the date for the acceptance of applications for apprenticeship or other training by any recruitment source, the Contractor shall send written notification to organizations such as the above, describing the openings, screening procedures, and tests to be used in the selection process.

j. Encourage present minority and female employees to recruit other minority persons and women and, where reasonable, provide after school, summer and vacation employment to minority and female youth both on the site and in other areas of a Contractor's work force.

k. Validate all tests and other selection requirements where there is an obligation to do so under 41 CFR Part 60-3.

l. Conduct, at least annually, an inventory and evaluation at least of all minority and female personnel for promotional opportunities and encourage these employees to seek or to prepare for, through appropriate training, etc., such opportunities.

m. Ensure that seniority practices, job classifications, work assignments and other personnel practices, do not have a discriminatory effect by continually monitoring all personnel and employment related activities to ensure that the EEO policy and the Contractor's obligations under these specifications are being carried out.

n. Ensure that all facilities and company activities are non-segregated except that separate or single-user toilet and necessary changing facilities shall be provided to assure privacy between the sexes.

o. Document and maintain a record of all solicitations of offers for subcontracts from minority and female construction contractors and suppliers, including circulation of solicitations to minority and female contractor associations and other business associations.

p. Conduct a review, at least annually, of all supervisors' adherence to and performance under the Contractor's EEO policies and affirmative action obligations.

8. Contractors are encouraged to participate in voluntary associations which assist in fulfilling one or more of their affirmative action obligations (7a through p). The efforts of a contractor association, joint contractor-union, contractor-community, or other similar group of which the contractor is a member and participant, may be asserted as fulfilling any one or more of its obligations under 7a through p of these Specifications provided that the contractor actively participates in the group, makes every effort to assure that the group has a positive impact on the employment of minorities and women in the industry, ensures that the concrete benefits of the program are reflected in the Contractor's minority and female workforce participation, makes a good faith effort to meet its individual goals and timetables, and can provide access to documentation which demonstrates the effectiveness of actions taken on behalf of the Contractor. The obligation to comply, however, is the Contractor's and failure of such a group to fulfill an obligation shall not be a defense for the Contractor's noncompliance

9. A single goal for minorities and a separate single goal for women have been established. The Contractor, however, is required to provide equal employment opportunity and to take affirmative action for all minority groups, both male and female, and all women, both minority and non-minority. Consequently, the Contractor may be in violation of the Executive Order if a particular group is employed in a substantially disparate manner (for example, even though the Contractor has achieved its goals for women generally, the Contractor may be in violation of the Executive Order if a specific minority group of women is underutilized).

10. The Contractor shall not use the goals and timetables or affirmative action standards to discriminate against any person because of race, color, religion, sex, or national origin.

11. The Contractor shall not enter into any Subcontract with any person or firm debarred from Government contracts pursuant to Executive Order 11246.

12. The Contractor shall carry out such sanctions and penalties for violation of these specifications and of the Equal Opportunity Clause, including suspension, termination and cancellation of existing subcontracts as may be imposed or ordered pursuant to Executive Order 11246, as amended, and its implementing regulations, by the Office of Federal Contract Compliance Programs. Any Contractor who fails to carry out such sanctions and penalties shall be in violation of these specifications and Executive Order 11246, as amended.

13. The Contractor, in fulfilling its obligations under these specifications, shall implement specific affirmative action steps, at least as extensive as those standards prescribed in paragraph 7 of these specifications, so as to achieve maximum results from its efforts to ensure equal employment opportunity. If the Contractor fails to

comply with the requirements of the Executive Order, the implementing regulations, or these specifications, the Director shall proceed in accordance with 41 CFR 60-4.8.

14. The Contractor shall designate a responsible official to monitor all employment related activity to ensure that the company EEO policy is being carried out, to submit reports relating to the provisions hereof as may be required by the Government and to keep records. Records shall at least include for each employee the name, address, telephone numbers, construction trade, union affiliation if any, employee identification number when assigned, social security number, race, sex, status (e.g., mechanic, apprentice trainee, helper, or laborer), dates of changes in status, hours worked per week in the indicated trade, rate of pay, and locations at which the work was performed. Records shall be maintained in an easily understandable and retrievable form; however, to the degree that existing records satisfy this requirement, contractors shall not be required to maintain separate records.

15. Nothing herein provided shall be construed as a limitation upon the application of other laws which establish different standards of compliance or upon the application of requirements for the hiring of local or other area residents (e.g., those under the Public Works Employment Act of 1977 and the Community Development Block Grant Program).

(b) The notice set forth in 41 CFR 60-4.2 and the specifications set forth in 41 CFR 60-4.3 replace the New Form for Federal Equal Employment Opportunity Bid Conditions for Federal and Federally Assisted Construction published at 41 FR 32482 and commonly known as the Model Federal EEO Bid Conditions, and the New Form shall not be used after the regulations in 41 CFR Part 60-4 become effective.

[43 FR 49254, Oct. 20, 1978; 43 FR 51401, Nov. 3, 1978, as amended at 45 FR 65978, Oct. 3, 1980]

NOTICE TO LABOR UNIONS OR OTHER ORGANIZATIONS OF WORKERS

NON-DISCRIMINATION IN EMPLOYMENT

TO: _____
(Name of Union or Organization of Workers)

The undersigned currently holds contract(s) with _____
(Name of Applicant)
involving funds or credit of the U.S. Government of (a) subcontract(s) with a prime contractor holding such contract(s).

You are advised that under the provisions of the above contract(s) or subcontract(s) and in accordance with Executive Order 11246, dated September 24, 1965, the undersigned is obliged not to discriminate against any employee or applicant for employment because of race, age, handicap, veteran status, color, creed, or national origin. This obligation not to discriminate in employment includes, but is not limited to, the following:

HIRING, PLACEMENT, UPGRADING, TRANSFER, OR DEMOTION, RECRUITMENT, ADVERTISING, OR SOLICITATION FOR EMPLOYMENT TRAINING DURING EMPLOYMENT, RATES OF PAY OR OTHER FORMS OF COMPENSATION, SELECTION FOR TRAINING INCLUDING APPRENTICESHIP, LAYOFF, OR TERMINATION.

This notice is furnished you pursuant to the provisions of the above contract(s) or subcontract(s) and Executive Order 11246.

COPIES OF THIS NOTICE WILL BE POSTED BY THE UNDERSIGNED IN CONSPICUOUS PLACES AVAILABLE TO EMPLOYEES OR APPLICANTS FOR EMPLOYMENT.

_____

_____

_____
(Contractor or Subcontractor)

_____
(Date)

UNITED STATES
ENVIRONMENTAL PROTECTION AGENCY

ASSURANCE OF COMPLIANCE
FOR
TITLE VI OF THE CIVIL RIGHTS ACT OF 1964
AND
SECTION 13 OF THE FWPCA AMENDMENTS OF 1972

NAME AND ADDRESS OF APPLICANT/RECIPIENT *(Hereinafter called ASSUROR)*	GRANT IDENTIFICATION NUMBER *(To be completed by EPA)*	GRANT AMOUNT REQUESTED $
	TYPE OF GRANT ΓDEMONSTRATION ΓRESEARCH ΓTRAINING ΓOTHER *(Specify)*:	
	CHECK ONE: ΓNEW ΓCONTINUATION	

HEREBY AGREES THAT IT will comply with Title VI of the Civil Rights Act of 1964 (P.L. 88-352) and all requirements of the U.S. Environmental Protection Agency *(hereinafter called "EPA")* issued pursuant to that title, to the end that in accordance with Title VI of that Act, no person in the United States shall, on the ground of race, color, or national origin be excluded from participation in, be denied the benefits of, or be otherwise subjected to discrimination under any program or activity for which the Assuror receives financial assistance from EPA and hereby gives assurance that it will now and hereafter take all necessary measures to effectuate this agreement.

HEREBY AGREES THAT IT will comply with all applicable requirements of Section 13 of the Federal Water Pollution Control Act Amendments of 1972 (P.L. 92-500) and all requirements of EPA issued pursuant to that section, to the end that in accordance with that section of that Act, no person in the United States shall, on the ground of sex be excluded from participation in, be denied the benefits of, or be otherwise subjected to discrimination under any program or activity under the said Federal Water Pollution Control Act Amendments for which the Assuror receives assistance from EPA and hereby gives assurance that it will now and hereafter take all necessary measures to effectuate this agreement.

If any real property or structure thereon is provided or improved with the aid of financial assistance extended to the Assuror by EPA, this Assurance obligates the Assuror, or, in the case of any transfer of such property, any transferee for the period during which the real property or structure is used for a purpose involving the provisions of similar services or benefits. If any personal property is so provided, this Assurance obligates the Assuror for the period during which it retains ownership or possession of the property. In all other cases, this Assurance obligates the Assuror for the period during which the financial assistance is extended to it by EPA.

THE ASSURANCE is given in consideration of and for the purpose of obtained any and all Federal grants, loans, contracts, property discounts or other financial assistance extended after the date hereof to the Assuror by EPA including installment payments after such date on account of arrangements for Federal financial assistance which were approved before such date. The Assuror recognizes and agrees that such Federal financial assistance will be extended in reliance on the representations and agreements made in this Assurance and that the United States shall reserve the right to seek judicial enforcement of this Assurance. The Assurance is binding on the Assuror, its successors, transferees, and assignees, and the person or persons whose signature appear below are authorized to sign this Assurance on behalf of the Assuror.

The obligations assumed by the Assuror hereunder are in addition to any obligations which may be imposed to the Assuror by any applicable regulation now outstanding or which may hereafter be adopted by EPA to effectuate any provision or goal of the said Title VI and all applicable requirements of the said Section 13, and no part of this Assurance shall be read so as to in any way detract from or modify any obligation which may be imposed on the Assuror by any such regulation standing alone.

SIGNATURE OF ASSUROR BY PRESIDENT, CHAIRMAN OF BOARD OR COMPARABLE AUTHORIZED OFFICIAL	DATE

CONTRACTING WITH SMALL AND MINORITY FIRMS, WOMEN'S BUSINESS ENTERPRISE

40 CFR 31.36(e)

40 CFR 31.36(e) – Contracting with small and minority firms, women's business enterprise and labor surplus area firms.

(1) The grantee and sub-grantee will take all necessary affirmative steps to assure that minority firms, women's business enterprises, and labor surplus area firms are used when possible.

(2) Affirmative steps shall include:

(i) Placing qualified small and minority businesses and women's business enterprises on solicitation lists;
(ii) Assuring that small and minority businesses and women's business enterprises are solicited whenever they are potential sources;
(iii) Dividing the total requirements, when economically feasible, into smaller tasks or quantities to permit maximum participation by small and minority businesses, and women's business enterprises;
(iv) Establishing delivery schedules, where the requirement permits, which encourage participation by small and minority businesses, and women's business enterprises;
(v) Using the services and assistance of the Small Business Administration, and the Minority Business Development Agency of the Department of Commerce; and
(vi) Requiring the prime contractor, if subcontracts are to be let, to take affirmative steps listed in paragraphs (e)(2)(i) through (v) of this section.

TITLE 37

CHAPTER 2.1 DOMESTIC STEEL

Section

37-2.1-1. Short Title
37-2.1-2. Purpose
37-2.1-3. Purchase of steel and steel products
37-2.1-4 Payment
37-2.1-5. Definitions

37-2.1-1. Short title.

This chapter shall be known and may be cited as the "Steel Products Procurement Act".

37-2.1-2. Purpose.

(a) This chapter shall be deemed to be an exercise of the police powers of the state for the protection of the health, safety, and general welfare of the people of the state.

(b) It is hereby determined by the general assembly of Rhode Island and declared as a matter of legislative findings that:

(1) The United States is one of the leading countries in the production and use of steel and its allied products;
(2) The use of steel products constitutes a major industry of the United States and, as such, provides the jobs and family incomes of millions of persons in the United States;
(3) The taxes paid to Rhode Island and the United States by employers and employees engaged in the production and sale of steel products are one of the largest single sources of public revenues in this country;
(4) It has, for many years, been the policy of the state to aid and support the development and expansion of industry in the United States in order to foster the economic well-being of the state and its people; and
(5) The economy, general welfare, and national security of the United States, are inseparably related to the preservation and development of the steel industry in the United States.

(c) The general assembly therefore declares it to be the policy of the state that all public officers and agencies should, at all times, aid and promote the development of the steel industry of the United States in order to stimulate and improve the economic well-being of the state and its people.

37-2.1-3. Purchase of steel and steel products.

(a) Every public agency shall require that every contract document for the construction, reconstruction, alteration, repair, improvement, or maintenance of public works contain a provision that, if any steel products are to be used or supplied in the performance of the contract, only steel products as herein defined shall be used or supplied in the performance of the contract or any subcontracts thereunder.

(b) This section shall not apply in any case where the head of the public agency, in writing, determines that steel products as herein defined are not produced in, or readily available in the United States or that such steel products shall not exceed fifteen percent (15%) of the costs of any other steel products obtainable nationally or internationally.

37-2.1-4. Payment.

No public agency shall authorize, provide for, or make any payments to any person under any contract containing the provision required by 37-2.1-3 unless the public agency is satisfied that such person has fully complied with that provision. Any such payments made to any person by any public agency which should not have been made, as a result of this section, shall be recoverable directly from the contractor or subcontractor who did not comply with 37-2.1-3 by either such public agency or the attorney general upon suit filed in the court of any county.

37-2.1-5. Definitions.

The following words and phrases when used in this chapter shall have, unless the context clearly indicates otherwise, the meanings given to them in this section:

(a) "Person" means natural persons as well as corporations, partnerships, business units, and associations;

(b) "Public agency" means (1) the state and its departments, boards, commissions and agencies, (2) cities, towns, school districts, and any other governmental unit or district, (3) any and all other public bodies, authorities, officers, agencies, or instrumentalities, whether exercising a governmental or proprietary function;

(c) "Public works" means steel to construct, frame or reinforce any public structure, building, highway, waterway, street, bridge, transit system, airport, or other betterment, work or improvement, whether of a permanent or temporary nature, and whether for governmental or proprietary use;

(d) "Steel products" means products rolled, formed, shaped, drawn, extruded, forged, cast, fabricated, or otherwise similarly processed, or processed by a combination of two or more of such operations, from steel made in the United States by the open hearth, basic oxygen, electric furnace, Bessemer, or other steel making process;

(e) "United States" means the United States of America and includes all territory, continental or insular, subject to the jurisdiction of the United States.

TITLE 37

CHAPTER 12 CONTRACTORS' BONDS

Sections

37-12-1. Contractors required to give bond – Terms and conditions.
37-12-2. Rights of persons furnishing labor and materials.
37-12-3. Remedies of creditors and state – Priority of claims.
37-12-4. Intervention by creditor in suit brought by state.
37-12-5. Time limitation on creditors' actions.
37-12-6. Intervention in suit brought by creditor – Consolidation of suits.
37-12-7 Notice of Pendency of Suit
37-12-8. Certified copies of documents.
37-12-9. Payment into court by surety – Discharge.
37-12-10. Retainers relating to contracts for public works or sewer or water main construction.
37-12-11. Substitution of securities for retained earnings.

§ 37-12-1. Contractors required to give bond – Terms and conditions. – Every person (which word for the purposes of this chapter shall include a co-partnership, a number of persons engaged in a joint enterprise, or a corporation), before being awarded a contract by the department of transportation or by the department of administration, as the case may be, and every person awarded such a contract as a general contractor or construction or project manager for the construction, improvement, completion, or repair of any public road or portion thereof or of any bridge in which the contract price shall be in excess of fifty thousand dollars ($ 50,000), or for a contract for the construction, improvement, completion, or repair of any public building, or portion thereof, shall be required to furnish to the respective department a bond of that person to the state, with good and sufficient surety or sureties (hereafter in this chapter referred to as surety), acceptable to the respective department, in a sum not less than fifty percent (50%) and not more than one hundred percent (100%) of the contract price, conditioned that the contractor, principal in the bond, the person's executors, administrators, or successors, shall in all things, well and truly keep and perform the covenants, conditions, and agreements in the contract, and in any alterations thereof made as therein provided, on the person's part to be kept and performed, at the time and in the manner therein specified, and in all respects according to their true intent and meaning, and shall indemnify and save harmless the state, the respective department, and all of its officers, agents, and employees, as therein stipulated, and shall also promptly pay for all such labor performed or furnished and for all such materials and equipment furnished, (which as to equipment shall mean payment of the reasonable rental value, as determined by the respective department, of its use during the period of its use), as shall be used in the carrying on of the work covered by the contract, or shall see that they are promptly paid for, whether or not the labor is directly performed for or furnished to the contractor or is even directly performed upon the work covered by the contract, and whether or not the materials are furnished to the contractor or become component parts of the work, and whether or not the equipment is furnished to the contractor or even directly used upon the work. The bond shall contain the provisions that it is subject to all such rights and powers of the respective department and such other provisions as are set forth in the contract and the plans, specifications, and proposal incorporated by reference in the contract, and that no extension of the time of performance of the contract or delay in the completion of the work thereunder or any alterations thereof, made as therein provided, shall invalidate the bond or release the liability of the surety thereunder. Waiver of the bonding requirements of this section is expressly prohibited.

37-12-2. Rights of persons furnishing labor and materials.

Every person who shall have performed labor and every person who shall have furnished or supplied labor, material, or equipment in the prosecution of the work provided for in the contract, in respect of which a payment bond is furnished under § 37-12-1, and who has not been paid in full therefor before the expiration of a period of ninety (90) days after the day on which the last of the labor was performed or furnished by him or her, or material or equipment furnished or supplied by him or her for which a claim is made, shall have the right to sue on the payment bond for the amount, or the balance thereof, unpaid at the time of institution of the suit and to prosecute the action to final execution and judgment for the sum or sums justly due him or her; provided, however, that any person having direct contractual relationship with a subcontractor but no contractual relationship express or implied with the contractor

furnishing the payment bond shall have a right of action upon the payment bond upon giving written notice to the contractor within ninety (90) days from the date on which the person furnished or performed the last of the labor, or furnished or supplied the last of the material or equipment for which the claim is made, stating with substantial accuracy the amount claimed and the name of the party to whom the labor was furnished or performed or the material or equipment was furnished or supplied. The notice shall be served by mailing the same by certified mail, postage prepaid, in an envelope addressed to the contractor at any place he or she maintains an office, conducts his or her business, or his or her residence.

37-12-3. Remedies of creditors and state - Priority of claims.

The remedy on the bond shall be by a civil action brought in the superior court for the counties of Providence and Bristol and in any suit brought on the bond the rights of the state shall be prior to those of all creditors. The rights of persons who shall have performed labor as aforesaid shall be prior to the rights of all other creditors, and there shall be no priorities among laborers or among other creditors under the bond. The state, either after having recovered a judgment against the contractor on the contract or without having recovered a judgment, may bring a suit on the bond against the contractor and surety on the bond, and may join as parties defendant in the suit any persons claiming to have rights under the bond as creditors; and, if it has not brought such a suit, it may at any time before a final and conclusive decree, intervene and become a party in any suit brought, as hereafter provided in this chapter, by any person claiming to be a creditor under the bond.

37-12-4. Intervention by creditor in suit brought by state.

Any person claiming to be a creditor under the bond may at any time intervene and become a party in any pending suit brought as aforesaid by the state on the bond, and by so intervening may have the rights to the person adjudicated in the suit.

37-12-5. Time limitation on creditors' actions.

No suit instituted under § 37-12-2 shall be commenced after the expiration of two (2) years, or under the maximum time limit as contained within any labor or material payment bond required under § 37-12-1, whichever period is longer, after the day on which the last of the labor was furnished or performed or material or equipment was furnished or supplied by any person claiming under the section.

37-12-6. Intervention in suit brought by creditor - Consolidation of suits.

When a suit has been so brought on the bond by a person claiming to be a creditor under the bond and is pending, any other person claiming to be a creditor under the bond may intervene and become a party in the first suit thus brought and pending and by so intervening may have the rights of the other person adjudicated in the suit. If two (2) or more of the suits be filed in the court on the same day, the one in which the larger sum shall be claimed shall be regarded as the earlier suit. All suits brought upon the bond as provided in this chapter shall be consolidated together by the court and heard as one suit.

37-12-7. Notice of pendency of suit.

In any suit brought under the provisions of this chapter such personal notice of the pendency of the suit as the court may order shall be given to all such known creditors and persons claiming to be creditors under the bond as shall not have entered their appearances in the suit and, in addition to the notice, notice of the pendency of the suit shall be given by publication in some newspaper published in this state of general circulation in the city or town or every city or town in which the work covered by the contract was carried on, once a week for three (3) successive weeks, in such form as the court may order. The court, however, may dispense with the notices if satisfied that sufficient notices shall have been given in some other suit brought under the provisions of this chapter.

37-12-8. Certified copies of documents.

Any person claiming to be a creditor under the bond and having filed a claim with the respective department, in accordance with the requirements of § 37-12-2, shall have the right, at any time when the person could under this chapter file a suit or intervene in a pending suit, to require the respective department to furnish to the person certified copies of the contract, proposal, plans specifications, and bond.

37-12-9. Payment into court by surety - Discharge.

The surety on the bond may pay into the registry of the court, for distribution among those who may be or become entitled thereto under the decree of the court, the penal sum named in the bond less any amount which the surety

may have paid to the state in satisfaction of the liability of the surety to the state under the bond, and then shall be entitled to be discharged from all further liability under the bond.

37-12-10. Retainers relating to contracts for public works or sewer or water main construction.

(a) Upon substantial completion of the work required by a contract aggregating in amount less than five hundred thousand dollars ($ 500,000) with any municipality, or any agency or political subdivision thereof, for the construction, reconstruction, alteration, remodeling, repair, or improvement of sewers and water mains, or any public works project defined in, the awarding authority may deduct from its payment a retention to secure satisfactory performance of the contractual work not exceeding five percent (5%) of the contract price unless otherwise agreed to by the parties. Upon substantial completion of the work required by a contract aggregating in an amount of five hundred thousand dollars ($ 500,000) or greater with any municipality, or any agency or political subdivision thereof, for the construction, reconstruction, alteration, remodeling, repair, or improvement of sewers and water mains, or any public works project defined in **§ 37-13-1**, the awarding authority may deduct from its payment a retention to secure satisfactory performance of the contractual work not exceeding five percent (5%) of the contract price. In the case of periodic payments with respect to contracts less than the aggregate amount of five hundred thousand dollars ($ 500,000), the awarding authority may deduct from its payment a retention to secure satisfactory performance of the contractual work not exceeding five percent (5%) of the approved amount of any periodic payment unless otherwise agreed to by the parties. In the case of periodic payments with respect to contracts in the aggregate amount of five hundred thousand dollars ($ 500,000) or greater, the awarding authority may deduct from its payment a retention to secure satisfactory performance of the contractual work not exceeding five percent (5%) of the approved amount of any periodic payment.

(b) The retainage shall be paid to any contractor or subcontractor within ninety (90) days of the date the work is accepted by the awarding authority unless a dispute exists with respect to the work. If payment is not made within ninety (90) days for any reason other than a dispute, which, if resolved and it is not the fault of the contractor, interest shall be assessed at the rate of ten percent (10%) per annum on all money which is to be paid to the contractor or subcontractor.

(c) The retainage shall be paid to any contractor or subcontractor within ninety (90) days of the date his or her work is completed and accepted by the awarding authority. If payment is not made, interest shall be assessed at the rate of ten percent (10%) per annum.

(d) There shall also be deducted and retained from the contract price an additional sum sufficient to pay the estimated cost of municipal police traffic control on any public works project. Municipalities shall directly pay the officers working traffic details and shall bill and be reimbursed by the withholding authority for which the contract is being performed every thirty (30) days until the project is complete.

(e) Notwithstanding the foregoing, with respect to projects located within the town of Warren, the withholding authority shall hold an amount from the contract price which shall be reasonably sufficient to pay the estimated cost of municipal police traffic control. The withholding authority shall pay to the town of Warren within seventy-two (72) hours of written demand the actual costs of police traffic control associated with said project on an ongoing basis.

37-12-11. Substitution of securities for retained earnings.

(a) Where any public works contract as defined by § 37-13-1 provides for the retention of earned estimates by the state of Rhode Island, the contractor may, from time to time, withdraw the whole or any portion of the amount retained for payments to the contractor pursuant to the terms of the contract, upon depositing with the general treasurer either; (1) United States treasury bonds, United States treasury notes, United States treasury certificates of indebtedness, or United States treasury bills; (2) Bonds or notes of the state of Rhode Island ; or (3) Bonds of any political subdivision in the state of Rhode Island.

(b) No amount shall be withdrawn in excess of the market value of the securities at the time of deposit or of the par value of the securities, whichever is lower. The general treasurer shall, on a regular basis, collect all interest or income on the obligations so deposited and shall pay the interest or income, when and as collected, to the contractor who deposited the obligations. If the deposit is in the form of coupon bonds, the general treasurer shall deliver each coupon as it matures to the contractor. Any amount deducted by the state, or by any public department or official thereof, pursuant to the terms of the contract, from the retained payments otherwise due the contractor, shall be

deducted, first from that portion of the retained payments for which no security has been substituted, then from the proceeds of any deposited security. In the latter case, the contractor shall be entitled to receive interest, coupons, or income only from those securities which remain after the amount has been deducted. The securities so deposited shall be properly endorsed by the contractor in such manner so as to enable the general treasurer to carry out the provisions of this section.

TITLE 37

CHAPTER 12.1 SUBSTITUTION OF SECURITY FOR RETAINED EARNINGS OF ARCHITECTS AND ENGINEERS

Sections

37-12.1-1. Definition of Terms.
37-12.1-2. Substitution of security for retained earnings by designers.
37-12.1-3. Deduction from retained earnings.
37-12.1-4. Endorsement on securities.
37-12.1-5. Applicability.

37-12.1-1. Definition of terms.

Terms used in this chapter shall be construed as follows:

(a) "Designers", means any person, firm or corporation duly authorized pursuant to the laws of this state to engage in the practice of architecture and/or engineering within this state.

(b) "Public works contract" means a contract to perform design or planning services by a designer with the state or any agency or governmental subdivisions thereof.

(c) "Retained earnings" means any moneys or earned estimates withheld from a designer pursuant to the terms of a public works contract.

37-12.1-2. Substitution of security for retained earnings by designers.

(a) Where any public works contract provides for the holding of retained earnings from a designer, the designer may from time to time withdraw the whole or any portion of the amount retained upon either depositing with the general treasurer:

(1) United States treasury bonds, United States treasury notes, United States treasury certificates of indebtedness, or United States treasury bills;

(2) Bonds or notes of the state of Rhode Island; or

(3) Bonds of any political subdivision of the state of Rhode Island.

(b) With respect to the deposit of securities, the general treasurer shall, on a regular basis, collect all interest or income on the securities so deposited and shall pay the interest or income when and as collected to the designer depositing the securities. If the security is in the form of coupon bonds, the general treasurer shall deliver each coupon as it matures to the designer.

37-12.1-3. Deduction from retained earnings.

In the event that pursuant to the terms of the public works contract it is necessary to deduct any sum from retained earnings, the state or governmental unit or agency thereof shall first apply such deduction against sums not withdrawn and thereafter from the proceeds of the sale of any securities deposited or from the income earned on such securities, whichever is applicable.

37-12.1-4. Endorsement on securities.

All securities deposited with the general treasurer pursuant to this chapter shall be properly endorsed by the designer in such manner as to enable the general treasurer to carry out the provisions of this chapter.

37-12.1-5. Applicability.

This chapter shall apply to all retained earnings held pursuant to any public works contract as of [June 16, 1991].

TITLE 37

CHAPTER 13 LABOR AND PAYMENT OF DEBTS BY CONTRACTORS

Sections

37-13-1. "Public Works" defined
37-13-2. "Contractor" defined – information required.
37-13-3. Contractors subject to provisions – Weekly payment of employees.
37-13-3.1 State public works contract apprenticeship requirements
37-13-4. Provisions applicable to public works contracts – List of Subcontractors.
37-13-5. Payment for trucking or materials furnished – Withholding of sums due.
37-12-6. Ascertainment of prevailing rate of wages and other payments – Specification of rate in call for bids and in contract.
37-13-7. Specification in contract of amount and frequency of payment and wages.
37-13-8. Investigation and determination of prevailing wages – Filing of schedule.
37-13-9. Statutory provisions included in contracts.
37-13-10. Overtime compensation.
37-13-11. Posting of prevailing wage rates.
37-13-12. Wage records of contractors.
37-13-12.1. Obstruction of enforcement.
37-13-12.2. Subpoena powers.
37-13-12.3. Compelling obedience to subpoenas.
37-13-12.4. Penalty for violations.
37-13-13. Furnishing payroll record to director of labor.
37-13-13.1. Audits of wage records of out of state contractors and subcontractors.
37-13-14. Contractor's bond.
37-13-14.1. Enforcement – Hearings.
37-13-15. Review.
37-13-16. Termination of work on failure to pay agreed wages – Completion of work.
37-13-17. Private right of action to collect wages or benefits

37-13-1. "Public works" defined.

"Public works" as used in this chapter shall mean any public work consisting of grading, clearing, demolition, improvement, completion, repair, alteration, or construction of any public road or any bridge, or portion thereof, or any public building or portion thereof, or any heavy construction, or any public works projects of any nature or kind whatsoever.

37-13-2. "Contractor" defined - Information required.

The term "contractor" as used in this chapter shall mean the bidder whose bid has been accepted by an authorized agency or awarding authority as the bidder possessing the skills, ability, and integrity necessary to the faithful performance of the contract or work, and who shall certify that he or she is able to furnish labor that can work in harmony with all other elements of labor employed or to be employed on the contract or work. Essential information in regard to qualifications shall be submitted in such form to the awarding authority and the director of labor and training as the director of labor and training shall require. The authorized agency or awarding authority shall reserve the right to reject all bids, if it be in the public interest to do so.

37-13-3. Contractors subject to provisions - Weekly payment of employees.

All contractors, who have been awarded contracts for public works by an awarding agency or authority of the state or of any city, town, committee, or by any person or persons therein, in which state or municipal funds are used and of which the contract price shall be in excess of one thousand dollars ($1,000) whether payable at the time of the signing of the contract or at a later date, and their subcontractors, on such public works shall pay their employees at weekly intervals and shall comply with the provisions set forth in 37-13-4 - 37-13-14, inclusive, and 37-13-16.

37-13-3.1. State public works contract apprenticeship requirements.

Notwithstanding any laws to the contrary, all general contractors and subcontractors who perform work on any public works contract awarded by the state after passage of this act and valued at one million dollars ($ 1,000,000) or more shall employ apprentices required for the performance of the awarded contract. The number of apprentices shall comply with the apprentice to journeyman ratio for each trade approved by the apprenticeship council of the department of labor and training. To the extent that any of the provisions contained in this section conflict with the requirements for federal aid contracts, federal laws and regulations shall control.

37-13-4. Provisions applicable to public works contracts - Lists of subcontractors.

All public works shall be done by contract, subject to the same provisions of law relating thereto and to the letting thereof, which are applicable to similar contracts of the awarding authority or authorized agency, hereinafter called the "proper authority," in the general location where the work is to be performed and which are not contrary to the provisions of 37-13-1 - 37-13-14, and 37-13-16. Each contractor after the award of a contract for public works shall submit to the proper authority a list of his or her subcontractors of any part or all of the work. The list shall be submitted in such manner or form as the proper authority shall uniformly require from contractors in all public works.

37-13-5. Payment for trucking or materials furnished - Withholding of sums due.

A contractor or subcontractor on public works authorized by a proper authority shall pay any obligation or charge for trucking and material which have been furnished for the use of the contractor or subcontractor, in connection with the public works being performed by him or her, within ninety (90) days after the obligation or charge is incurred or the trucking service has been performed or the material has been delivered to the site of the work, whichever is later. When it is brought to the notice of the proper authority in a city or town, or the proper authority in the state having supervision of the contract, that the obligation or charge has not been paid by the contractor or subcontractor, the proper authority may deduct and hold for a period not exceeding sixty (60) days, from sums of money due to the contractor or subcontractor, the equivalent amount of such sums certified by a trucker or material man creditor as due him or her, as provided in this section, and which the proper authority determines is reasonable for trucking performed or materials furnished for the public works.

37-13-6. Ascertainment of prevailing rate of wages and other payments - Specification of rate in call for bids and in contract.

Before awarding any contract for public works to be done, the proper authority shall ascertain from the director of labor and training the general prevailing rate of the regular, holiday, and overtime wages paid and the general prevailing payments on behalf of employees only, to lawful welfare, pension, vacation, apprentice training, and educational funds (payments to the funds must constitute an ordinary business expense deduction for federal income tax purposes by contractors) in the city, town, village, or other appropriate political subdivision of the state in which the work is to be performed, for each craft, mechanic, teamster, laborer, or type of worker needed to execute the contract for the public works. The proper authority shall, also, specify in the call for bids for the contract and in the contract itself the general prevailing rate of the regular, holiday, and overtime wages paid and the payments on behalf of employees only, to the welfare, pension, vacation, apprentice training, and education funds existing in the locality for each craft, mechanic, teamster, laborer, or type of worker needed to execute the contract or work.

37-13-7. Specification in contract of amount and frequency of payment of wages.

Every call for bids for every contract in excess of one thousand dollars ($ 1,000), to which the state of Rhode Island or any political subdivision thereof or any public agency or quasi-public agency is a party, for construction, alteration, and/or repair, including painting and decorating, of public buildings or public works of the state of Rhode Island or any political subdivision thereof, or any public agency or quasi-public agency and which requires or involves the employment of employees, shall contain a provision stating the minimum wages to be paid various types of employees which shall be based upon the wages that will be determined by the director of labor and training to be prevailing for the corresponding types of employees employed on projects of a character similar to the contract work in the city, town, village, or other appropriate political subdivision of the state of Rhode Island in which the work is to be performed. Every contract shall contain a stipulation that the contractor or his or her subcontractor shall pay all the employees employed directly upon the site of the work, unconditionally and not less often than once a week, and without subsequent deduction or rebate on any account, the full amounts accrued at time of payment computed at wage rates not less than those stated in the call for bids, regardless of any contractual relationships which may be alleged to exist between the contractor or subcontractor and the employees, and that the scale of wages to be paid shall be posted by the contractor in a prominent and easily accessible place at the site of the work; and the further stipulation that there may be withheld from the contractor so much of the accrued payments as may be considered necessary to pay to the employees employed by the contractor, or any subcontractor on the work, the difference between the rates of wages required by the contract to be paid the employees on the work and the rates of wages received by the employees and not refunded to the contractor, subcontractors, or their agents.

(b) The terms "wages" , "scale of wages" , "wage rates" , "minimum wages" , and "prevailing wages" shall include:

(1) The basic hourly rate of pay; and

(2) The amount of:

(A) The rate of contribution made by a contractor or subcontractor to a trustee or to a third person pursuant to a fund, plan, or program; and

(B) The rate of costs to the contractor or subcontractor which may be reasonably anticipated in providing benefits to employees pursuant to an enforceable commitment to carry out a financially responsible plan or program which was communicated in writing to the employees affected, for medical or hospital care, pensions on retirement or death, compensation for injuries or illness resulting from occupational activity, or insurance to provide any of the foregoing, for unemployment benefits, life insurance, disability and sickness insurance, or accident insurance, for vacation and holiday pay, for defraying costs of apprenticeship or other similar programs, or for other bona fide fringe benefits, but only where the contractor or subcontractor is not required by other federal, state, or local law to provide any of the benefits ; provided, that the obligation of a contractor or subcontractor to make payment in accordance with the prevailing wage determinations of the director of labor and training insofar as this chapter of this title and other acts incorporating this chapter of this title by reference are concerned may be discharged by the making of payments in cash, by the making of contributions of a type referred to in subsection (b)(2), or by the assumption of an enforceable commitment to bear the costs of a plan or program of a type referred to in this subdivision, or any combination thereof, where the aggregate of any payments, contributions, and costs is not less than the rate of pay described in subsection (b)(1) plus the amount referred to in subsection (b)(2).

(c) The term "employees" , as used in this section, shall include employees of contractors or subcontractors performing jobs on various types of public works including mechanics, apprentices, teamsters, chauffeurs, and laborers engaged in the transportation of gravel or fill to the site of public works, the removal and/or delivery of gravel or fill or ready-mix concrete, sand, bituminous stone, or asphalt flowable fill from the site of public works, or the transportation or removal of gravel or fill from one location to another on the site of public works, and the employment of the employees shall be subject to the provisions of subsections (a) and (b) .

(d) The terms "public agency" and "quasi-public agency" shall include, but not be limited to, the Rhode Island industrial recreational building authority, the Rhode Island economic development corporation, the Rhode Island airport corporation, the Rhode Island industrial facilities corporation, the Rhode Island refunding bond authority, the Rhode Island housing and mortgage finance corporation, the Rhode Island resource recovery corporation, the Rhode Island public transit authority, the Rhode Island student loan authority, the water resources board corporate, the Rhode Island health and education building corporation, the Rhode Island turnpike and bridge authority, the Narragansett Bay water quality management district commission, Rhode Island telecommunications authority, the

convention center authority, the board of governors for higher education, the board of regents for elementary and secondary education, the capital center commission, the housing resources commission, the Quonset Point-Davisville management corporation, the Rhode Island children's crusade for higher education, the Rhode Island depositors economic protection corporation, the Rhode Island lottery commission, the Rhode Island partnership for science and technology, the Rhode Island public building authority, and the Rhode Island underground storage tank board.

37-13-8. Investigation and determination of prevailing wages - Filing of schedule.

The director of labor and training shall investigate and determine the prevailing wages and payments made to or on behalf of employees, as set forth in § 37-13-7, paid in the trade or occupation in the city, town, village, or other appropriate political subdivision of the state and keep a schedule on file in his or her office of the customary prevailing rate of wages and payments made to or on behalf of the employees which shall be open to public inspection. In making a determination, the director of labor may adopt and use such appropriate and applicable prevailing wage rate determinations as have been made by the secretary of labor of the United States of America in accordance with the Davis-Bacon Act, as amended, 40 U.S.C. § 276a; provided, however, that each contractor awarded a public works contract after July 1, 2007 shall contact the department of labor and training on or before July first of each year, for the duration of such contract to ascertain the prevailing wage rate of wages on a hourly basis and the amount of payment or contributions paid or payable on behalf of each mechanic, laborer or worker employed upon the work contracted to be done each year and shall make any necessary adjustments to such prevailing rate of wages and such payment or contributions paid or payable on behalf of each such employee every July first.

37-13-9. Statutory provisions included in contracts.

A copy of 37-13-5, 37-13-6, and 37-13-7 shall be inserted in all contracts for public works awarded by the state or any city or town, committee, an authorized agency or awarding authority thereof, or any person or persons in their behalf in which state or municipal funds are used if the contract price be in excess of one thousand dollars ($1,000).

37-13-10. Overtime compensation.

Labor performed under the provisions of 37-13-1 - 37-13-16, inclusive, during the period of forty (40) hours in any one week and during the period of eight (8) hours in any one day, shall be considered a legal week's work or a legal day's work, as the case may be, and any number of hours of employment in any one week greater than the number of forty (40) hours or in any one day greater than the number of eight (8) hours shall be compensated at the prevailing rate of wages for overtime employment; provided, however, when the director of labor and training has determined in the investigation provided for in 37-13-7 and 37-13-8 that there is a prevailing practice in a city, town, or other appropriate political subdivision to pay an overtime rate of wages for work of any craft, mechanic, teamster, laborer, or type of worker needed to execute the work other than hours worked in any one week greater than the number of forty (40) or in hours worked in any one day greater than the number of eight (8), then the prevailing practice shall determine the legal workday and the legal workweek in the city or town for the work and the prevailing rate of overtime wages shall be paid for such work in excess of that legal workday or week, as the case may be.

37-13-11. Posting of prevailing wage rates.

Each contractor awarded a contract for public works with a contract price in excess of one thousand dollars ($ 1,000), and each subcontractor who performs work on those public works, shall post in conspicuous places on the project, where covered workers are employed, posters which contain the current, prevailing rate of wages and the current, prevailing rate of payments to the funds required to be paid for each craft or type of worker employed to execute the contract as set forth in §§ 37-13-6 and 37-13- 7, and the rights and remedies of any employee described in § 37-13-17 for nonpayment of any wages earned pursuant to this chapter. Posters shall be furnished to contractors and subcontractors by the director of labor and training, who shall determine the size and context thereof from time to time, at the time a contract is awarded. A contractor or subcontractor who fails to comply with the provisions of this section shall be deemed guilty of a misdemeanor and shall pay to the director of labor and training one hundred dollars ($ 100) for each calendar day of noncompliance as determined by him or her. Contracts set forth in this section shall not be awarded by the state, any city, town, or any agency thereof until the director of labor and training has prepared and delivered the posters to the division of purchases, if the state or any agency thereof is the proper authority, or to the city, town, or an agency thereof, if it is the proper authority, and the contractor to whom the contract is to be awarded.

37-13-12. Wage records of contractors.

Each contractor awarded a contract with a contract price in excess of one thousand dollars ($1,000) for public works, and each subcontractor who performs work on those public works, shall keep an accurate record showing the name, occupation, and actual wages paid to each worker employed by him or her and the payments to all the employee funds specified in sections 37-13-6 and 37-13-7 by him or her in connection with the contract or work. The director and his or her authorized representatives shall have the right to enter any place of employment at all reasonable hours for the purpose of inspecting the wage records and seeing that all provisions of this chapter are complied with.

37-13-12.1. Obstruction of enforcement.

Any effort of any employer to obstruct the director and his or her authorized representatives in the performance of their duties shall be deemed a violation of this chapter and punishable as such.

37-13-12.2. Subpoena powers.

The director and his or her authorized representatives shall have power to administer oaths and examine witnesses under oath, issue subpoenas, subpoenas duces tecum, compel the attendance of witnesses, and the production of papers, books, accounts, records, payrolls, documents, and testimony, and to take depositions and affidavits in any proceeding before the director.

37-13-12.3. Compelling obedience to subpoenas.

In case of failure of any person to comply with any subpoena lawfully issued, or subpoena duces tecum, or on the refusal of any witness to testify to any matter regarding which he may be lawfully interrogated, it shall be the duty of the superior court, or any judge thereof, on application by the director, to compel obedience by proceedings in the nature of those for contempt.

37-13-12.4. Penalty for violations.

Except as otherwise provided in this chapter, any employer who shall violate or fail to comply with any of the provisions of this chapter shall be guilty of a misdemeanor and shall be punished by a fine of not less than five hundred dollars ($500) nor more than one thousand dollars ($1,000) for each separate offense, or by imprisonment of up to one year, or by both fine and imprisonment. Each day of failure to pay wages due an employee at the time specified in this chapter shall constitute a separate and distinct violation.

37-13-13. Furnishing payroll record to director of labor.

(a) Every contractor and subcontractor awarded a contract for public works as defined by this chapter shall furnish a certified copy of his or her payroll records of his or her employees employed on the project to the awarding authority on a monthly basis for all work completed in the preceding month on a uniform form prescribed by the director of labor and training. Notwithstanding the foregoing, certified payrolls for department of transportation public works may be submitted on the federal payroll form, provided that, when a complaint is being investigated, the director or his or her designee may require that a contractor resubmit the certified payroll on the uniform department form.

(b) Awarding authorities, contractors and subcontractors shall provide any and all payroll records to the director of labor and training within ten (10) days of their request by the director or his or her designee.

(c) In addition, every contractor and subcontractor shall maintain on the site where public works are being constructed and the general or primary contract is one million dollars ($1,000,000) or more, a daily log of employees employed each day on the public works project. The log shall include, at a minimum, for each employee his or her name, primary job title, and employer and shall be kept on a uniform form prescribed by the director of labor and training. Such log shall be available for inspection on the site at all times by the awarding authority and/or the director of the department of labor and training and his or her designee. This subsection shall not apply to road, highway, or bridge public works projects.

(d) The director of labor and training may promulgate reasonable rules and regulations to enforce the provisions of this section.

(e) The awarding authority of any public works project shall withhold the next scheduled payment to any contractor or subcontractor who fails to comply with the provisions of subsections (a) or (b) above and shall also

notify the director of labor and training. The awarding authority shall withhold any further payments until such time as the contractor or subcontractor has fully complied. If it is a subcontractor who has failed to comply, the amount withheld shall be proportionate to the amount attributed or due to the offending subcontractor as determined by the awarding authority. The department may also impose a penalty of up to five hundred dollars ($500) for each calendar day of noncompliance with this section, as determined by the director of labor and training. Mere errors and/or omissions in the daily logs maintained under subsection (c) shall not be grounds for imposing a penalty under this subsection.

37-13-13.1. Audits of wage records of out of state contractors and subcontractors.

Out of state contractors or subcontractors who perform work on public works in this state authorize the director of labor and training to conduct wage and hour audits of their payroll records pursuant to the provisions of chapter 14 of title 28.

37-13-14. Contractor's bond.

The state or any city, town, agency, or committee therein awarding contracts for public works shall require the contractor awarded a contract with a contract price in excess of fifty thousand dollars ($ 50,000) for public works to file with the proper authority good and sufficient bond with surety furnished by any surety company authorized to do business in the state, conditioned upon the faithful performance of the contract and upon the payment for labor performed and material furnished in connection therewith, a bond to contain the terms and conditions set forth in chapter 12 of this title, and to be subject to the provisions of that chapter. Waiver of the bonding requirements of this section is expressly prohibited.

37-13-14.1. Enforcement - Hearing

(a) Before issuing an order or determination, the director of labor and training shall order a hearing thereon at a time and place to be specified, and shall give notice thereof, together with a copy of the complaint or the purpose thereof, or a statement of the facts disclosed upon investigation, which notice shall be served personally or by mail on any person, firm, or corporation affected thereby. The person, firm, or corporation shall have an opportunity to be heard in respect to the matters complained of at the time and place specified in the notice, which time shall be not less than five (5) days from the service of the notice personally or by mail. The hearing shall be held within ten (10) days from the order of hearing. The hearing shall be conducted by the director of labor and training or his or her designee. The hearing officer in the hearing shall be deemed to be acting in a judicial capacity and shall have the right to issue subpoenas, administer oaths, and examine witnesses. The enforcement of a subpoena issued under this section shall be regulated by Rhode Island civil practice law and rules. The hearing shall be expeditiously conducted, and upon such hearing, the hearing officer shall determine the issues raised thereon and shall make a determination and enter an order within ten (10) days of the close of the hearing, and forthwith serve a copy of the order, with a notice of the filing thereof, upon the parties to the proceeding, personally or by mail. The order shall dismiss the charges or direct payment of wages or supplements found to be due, including interest at the rate of twelve percent (12%) per annum from the date of the underpayment to the date of payment, and may direct payment of reasonable attorney's fees and costs to the complaining party.

(b) In addition to directing payment of wages or supplements including interest found to be due, the order shall also require payment of a further sum as a civil penalty in an amount up to three times the total amount found to be due. Further, if the amount of salary owed to an employee pursuant to this chapter but not paid to the employee in violation of thereof exceeds five thousand dollars ($5,000), it shall constitute a misdemeanor and shall be referred to the office of the attorney general. The misdemeanor shall be punishable for a period of not more than one year in prison and/or fined not more than one thousand dollars ($1,000). In assessing the amount of the penalty, due consideration shall be given to the size of the employer's business, the good faith of the employer, the gravity of the violation, the history of previous violations, and the failure to comply with recordkeeping or other nonwage requirements. The surety of the person, firm, or corporation found to be in violation of the provisions of this chapter shall be bound to pay any penalties assessed on such person, firm, or corporation. The penalty shall be paid to the department of labor and training for deposit in the state treasury; provided, however, it is hereby provided that the general treasurer shall establish a dedicated "prevailing wages enforcement fund" for the purpose of depositing the penalties paid as provided herein. There is hereby appropriated to the annual budget of the department of labor and training the amount of the fund collected annually under this section, to be used at the direction of the director of labor and training for the sole purpose of enforcing prevailing wage rates as provided in this chapter.

(c) For the purposes of this chapter, each day or part thereof of violation of any provision of this chapter by a person, firm, or corporation, whether the violation is continuous or intermittent, shall constitute a separate and succeeding violation.

(d) In addition to the above, any person, firm, or corporation found in violation of any of the provisions of this chapter by the director of labor and training, an awarding authority, or the hearing officer, shall be ineligible to bid on, or be awarded work by, an awarding authority or perform any such work for a period of no less than eighteen (18) months and no more than thirty-six (36) months from the date of the order entered by the hearing officer. Once a person, firm, or corporation is found to be in violation of this chapter, all pending bids with any awarding authority shall be revoked, and any bid awarded by an awarding authority prior to the commencement of the work shall also be revoked.

(e) In addition to the above, any person, firm, or corporation found to have committed two (2) or more willful violations in any period of eighteen (18) months of any of the provisions of this chapter by the hearing officer, which violations are not arising from the same incident, shall be ineligible to bid on, or be awarded work by, an awarding authority or perform any work for a period of sixty (60) months from the date of the second violation.

(f) The order of the hearing officer shall remain in full force and effect unless stayed by order of the superior court.

(g) The director of labor and training, awarding authority, or hearing officer shall notify the bonding company of any person, firm, or corporation suspected of violating any section of this chapter. The notice shall be mailed certified mail and shall enumerate the alleged violations being investigated.

(h) In addition to the above, any person, firm, or corporation found to have willfully made a false or fraudulent representation on certified payroll records shall be referred to the office of the attorney general. A first violation of this section shall be considered a misdemeanor and shall be punishable for a period of not more than one year in prison and/or fined one thousand dollars ($1,000). A second or subsequent violation of this section shall be considered a felony and shall be punishable for a period of not more than three (3) years imprisonment, a fine of three thousand dollars ($3,000), or both. Further, any person, firm, or corporation found to have willfully made a false or fraudulent representation on certified payroll records shall be required to pay a civil penalty to the department of labor and training in an amount of no less than two thousand dollars ($2,000) and not greater than fifteen thousand dollars ($15,000) per representation.

37-13-15. Review.

(a) There is hereby created an appeals board which shall be comprised of three (3) members who shall be appointed by the governor; provided, however, that each member of the appeals board shall have at least five (5) years experience with prevailing wage rates as they apply to the construction industry. The members of such appeals board shall serve without compensation. The members of the appeals board shall be appointed for terms of three (3) years except that of the three (3) members originally appointed by each of the appointing authorities; one (1) shall be appointed for a term of one (1) year, one (1) shall be a appointed for a term of two (2) years and one (1) for a term of three (3) years.

(b) Any person aggrieved by any action taken by the director of labor and training or his or her designated hearing officer under the authority of this chapter, or by the failure or refusal of the director of labor and training to take any action authorized by this chapter, may obtain a review thereof for the purpose of obtaining relief from the action or lack of action by filing a petition for administrative review and relief, to the appeals board as provided herein. The petition for administrative review shall be filed within twenty (20) days of the action taken by the director of labor and training or designated hearing officer: The petition for administrative review shall be heard within ten (10) days of the date of filing. An aggrieved person under this section shall include:

(1) Any person who is required to pay wages to his or her employees or make payments to a fund on behalf of his or her employees, as provided in this chapter;
(2) Any person who is required to be paid wages for his or her labor or on whose behalf payments are required to be paid to funds, as provided by this chapter;
(3) The lawful collective bargaining representative of a person defined in subdivision (2) above;
(4) A trade association of which a person defined in subdivision (1) above is a member;
(5) A proper authority as defined in this chapter;

(6) A contractor who submitted a bid for work to be or which has been awarded under the provisions of this chapter or a trade association of which he or her is a member, and
(7) A labor organization which has one or more written collective bargaining agreements with one or more employers or a trade association which sets forth the hours, wages, and working conditions of a craft, mechanic, teamster, or type of worker needed to execute the work, as provided in this chapter to the extent that it would be affected by the action or the failure to act of the director of labor and training or the hearing officer.

(c) Any aggrieved person as defined herein may obtain a review of a decision of the appeals board by filing a petition in the superior court in Providence county pursuant to the provisions of the administrative procedures act, praying for review and relief and the petition shall follow the course of and be subject to the procedures for causes filed in the court.

(d) The director is hereby empowered to enforce his or her decision and/or the decision of the appeals board in the superior court for the county of Providence.

37-13-16. Termination of work on failure to pay agreed wages - Completion of work.

Every contract within the scope of this chapter shall contain the further provision that in the event it is found by the director of labor and training that any employee employed by the contractor or any subcontractor directly on the site of the work covered by the contract has been or is being paid a rate of wages less than the rate of wages required by the contract to be paid as aforesaid, the awarding party may, by written notice to the contractor or subcontractor, terminate his or her right as the case may be, to proceed with the work, or such part of the work as to which there has been a failure to pay the required wages, and shall prosecute the work to completion by contract or otherwise, and the contractor and his or her sureties shall be liable to the awarding party for any excess costs occasioned the awarding authority thereby.

37-13-17. Private right of action to collect wages or benefits

(a) An employee or former employee, or any organization representing such an employee or former employee, of a contractor or subcontractor may bring a civil action for a violation of § 37-13-7 for appropriate injunctive relief, or actual damages, or both within three (3) years after the occurrence of the alleged violation. An action commenced pursuant to this section, may be brought in the superior court for the county where the alleged violation occurred, the county where the complainant resides, or the county where the person against whom in the civil complaint is filed resides or has their principal place of business. Any contractor or subcontractor who violates the provisions of § 37-13-7 shall be liable to the affected employee or employees in the amount of unpaid wages or benefits, plus interest. A civil action filed in court under this section may be instituted instead of, but not in addition to the director of labor and training enforcement procedures authorized by § 37-13-14.1, provided the civil action is filed prior to the date the director of labor and training issues notice of an administrative hearing.

(b) An employer's responsibility and liability is solely for its own employees.

(c) An action instituted pursuant to this section may be brought by one or more employees or former employees on behalf of himself/herself or themselves and other employees similarly situated, except that no employee shall be a party plaintiff to any such action unless he/she gives his/her consent in writing to become such a party and such consent is filed in the court in which such action is brought.

(d) In an action filed under this section in which the plaintiff prevails, the court shall, in addition to any judgment awarded to the plaintiff, require reasonable attorneys' fees and the costs of the action to be paid by the defendant.

(e) The court in an action filed under this section shall award affected employees or former employees liquidated damages in an amount equal to two (2) times the amount of unpaid wages or benefits owed. Unpaid fringe benefit contributions owed pursuant to this section in any form shall be paid to the appropriate benefit fund, however, in the absence of an appropriate fund the benefit shall be paid directly to the individual.

(f) The filing of a civil action under this section shall not preclude the director of labor and training from referring a matter to the attorney general as provided in § 37-13-14.1(b), from prohibiting a contractor or subcontractor from bidding on or otherwise participating in contracts as provided in § 37-13-14.1(d), (e) and (h), or from prohibiting termination of work on failure to pay agreed wages pursuant to § 37-13-16.

(g) Any person, firm, or corporation found to have willfully made a false or fraudulent representation in connection with wage obligations owed on a contract shall be required to pay a civil penalty to the department of labor and training in an amount of no less than one thousand dollars ($ 1,000) and not greater than three thousand dollars ($ 3,000) per representation. Such penalties shall be recoverable in civil actions filed pursuant to this section. For purposes of this subsection "willfully" shall mean representations that are known to be false, or representations made with deliberate ignorance or reckless disregard for their truth or falsity.

(h) An employer shall not discharge, threaten, or otherwise discriminate against an employee, or former employee, regarding compensation terms, conditions, locations or privileges of employment because the employee or former employee, or a person or organization acting on his or her behalf: (1) Reports or makes a complaint under this section; or otherwise asserts his or her rights under this section; and/or (2) Participates in any investigation, hearing or inquiry held by the director of labor and training under § 37-13-14.1. In the event a contractor or subcontractor retaliates or discriminates against an employee in violation of this section, the affected employee may file an action in any court of competent jurisdiction and the court shall order reinstatement and/or restitution of the affected employee, as appropriate, with back pay to the date of the violation, and an additional amount in liquidated damages equal to two (2) times the amount of back pay and reasonable attorneys' fees and costs.

(i) If any one or more subsections of this section shall for any reason be adjudged unconstitutional or otherwise invalid, the judgment shall not affect, impair, or invalidate the remaining subsections.

PREVAILING WAGE RATES

(Appropriate wage rate to be inserted by bidder in specifications)

For a copy of the appropriate wage rate, contact:

R.I. Department of Labor and Training
Center General Complex
1511 Pontiac Avenue
Cranston, RI 02920

TITLE 37

CHAPTER 14.1 MINORITY BUSINESS ENTERPRISE

Sections

37-14.1-1. Purpose.
37-14.1-2. Applicability.
37-14.1-3. Definitions.
37-14.1-4. Policy.
37-14.1-5. Discrimination prohibited.
37-14.1-6. Minority business enterprise guidelines.
37-14.1-7. Establishment of criteria and guidelines.
37-14.1-8. Sanctions.

37-14.1-1. Purpose.

The purpose of this chapter is to carry out the state's policy of supporting the fullest possible participation of firms owned and controlled by minorities and women (MBE's), in state funded and state directed public construction programs and projects and in state purchases of goods and services. This includes assisting MBE's throughout the life of contracts in which they participate.

37-14.1-2. Applicability.

This chapter shall apply to any and all state purchasing, including, but not limited to the procurement of goods, services, construction projects, or contracts funded in whole or in part by state funds, or funds which, in accordance with a federal grant or otherwise, the state expends or administers or in which the state is a signatory to the construction contract.

37-14.1-3. Definitions.

(a) "Affirmative action" means taking specific steps to eliminate discrimination and its effects, to ensure nondiscriminatory results and practices in the future, and to involve minority business enterprises fully in contracts and programs funded by the state.

(b) "Compliance" means the condition existing when a contractor has met and implemented the requirements of this chapter.

(c) "Contract" means a mutually binding legal relationship or any modification thereof obligating the seller to furnish supplies or services, including construction, and the buyer to pay for them. For purposes of this chapter, a lease is a contract.

(d) "Contractor" means one who participates, through a contract or subcontract, in any procurement or program covered by this chapter, and includes lessees and material suppliers.

(e) "Minority" means a person who is a citizen or lawful permanent resident of the United States and who is:
(1) Black (a person having origins in any of the black racial groups of Africa);
(2) Hispanic (a person of Mexican, Puerto Rican, Cuban, Central or South American, or other Spanish culture or origin, regardless of race);
(3) Portuguese (a person of Portuguese, Brazilian, or other Portuguese culture or origin, regardless of race);
(4) Asian American (a person having origins in any of the original peoples of the Far East, Southeast Asia, the Indian subcontinent, or the Pacific Islands);
(5) American Indian and Alaskan Native (a person having origins in any of the original peoples of North America.); or
(6) Members of other groups, or other individuals, found to be economically and socially disadvantaged by the Small Business Administration under section 8(a) of the Small Business Act, as amended [15 U.S.C. 637(a)].

(f) "Minority business enterprise" or "MBE" means a small business concern, as defined pursuant to section 3 of the federal Small Business Act [15 U.S.C. 632] and implementing regulations, which is owned and controlled by one or more minorities or women. For the purposes of this chapter, owned and controlled means a business.

(1) Which is at least fifty-one percent (51%) owned by one or more minorities or women or, in the case of a publicly owned business, at least fifty-one percent (51%) of the stock of which is owned by one or more minorities or women; and
(2) Whose management and daily business operations are controlled by one or more such individuals.

(g) "MBE coordinator" means the official designated to have overall responsibility for promotion of minority business enterprise in his or her departmental element.

(h) "Noncompliance" means the condition existing when a recipient or contractor has failed to implement the requirements of this chapter.

37-14.1-4. Policy.

It is the policy of the state of Rhode Island that minority business enterprises (MBE's) shall have the maximum opportunity to participate in the performance of procurements and projects outlined in 37-14.1-2.

37-14.1-5. Discrimination prohibited.

No person shall be excluded from participation in, denied the benefits of, or otherwise discriminated against in connection with the award and performance of any project covered by this chapter, on the grounds of race, color, national origin, or sex.

37-14.1-6. Minority business enterprise participation.

Minority business enterprises shall be included in all procurements and construction projects under this chapter and shall be awarded a minimum of ten percent (10%) of the dollar value of the entire procurement or project. The director of the department of administration is further authorized to establish by rules and regulation formulas for giving minority business enterprises a preference in contract and subcontract awards.

37-14.1-7. Establishment of criteria and guidelines.

The director of the department of administration shall establish, by rule and regulations adopted in accordance with chapter 35 of title 42, standards which shall determine whether a construction project is covered by this chapter, compliance formulas, procedures for implementation, and procedures for enforcement which are not inconsistent with 49 CFR 23 of the federal regulations. As to Rhode Island department of transportation contracts, the director of administration may delegate this authority to the director of transportation.

37-14.1-8. Sanctions.

(a) The director of the department of administration shall have the power to impose sanctions upon contractors not in compliance with this chapter and shall include but not be limited to:

(1) Suspension of payments;
(2) Termination of the contract;
(3) Recovery by the state of ten percent (10%) of the contract award price as liquidated damages; and
(4) Denial of right to participate in future projects for up to three (3) years.

(b) As to Rhode Island department of transportation contracts, the director of the department of administration may delegate this authority to the director of transportation.

RHODE ISLAND REQUIREMENTS FOR PARTICIPATION BY MINORITY BUSINESS ENTERPRISES IN STATE FUNDED AND DIRECTED PUBLIC CONSTRUCTION PROJECTS, CONSTRUCTION CONTRACTS AND PROCUREMENT CONTRACTS

In accordance with RI Gen. Law § 37-14.1-1, it is the policy of the State of Rhode Island to support the fullest possible participation of firms owned and controlled by minorities (MBEs) and women (WBEs). Pursuant to §§ 37-14.1-2 and 37-14.1-6, MBEs and WBEs shall be included in all state purchasing, including, but not limited to, the procurement of goods, services, construction projects, or contracts funded in whole or in part with state funds, or funds which, in accordance with a federal grant or otherwise, the state expends or administers. MBEs and WBEs shall be awarded a minimum of ten percent (10%) of the dollar value of the entire procurement or project. MBE participation credit shall only be granted for firms duly certified as MBEs or WBEs by the State of Rhode Island, Department of Administration, Office of Diversity, Equity and Opportunity, MBE Compliance Office (MBECO). The current directory of firms certified as MBEs or WBEs may be accessed at http://odeo.ri.gov/offices/mbeco/mbe-wbe.php or by contacting Dorinda Keene at the MBECO at (401) 574-8670 or via email at Dorinda.Keene@doa.ri.gov

TITLE 37

CHAPTER 16 PUBLIC WORKS ARBITRATION

Sections

37-16-1. Short Title.
37-16-2. Contract provisions for arbitration.
37-16-3. Application for subcontracts.
37-16-4. Stay of legal proceedings pending arbitration.
37-16-5. Jurisdiction of superior court to enforce arbitration provisions and awards.
37-16-6. Trial upon evidence of substantial issue.
37-16-7. Method of appointing arbitrators.
37-16-8. Scheduling and notice of arbitration hearing – Adjournment.
37-16-9. Power of court to direct prompt hearing.
37-16-10. Arbitrator's oath – Waiver.
37-16-11. Powers of arbitrators.
37-16-12. Fees.
37-16-13. Validity of awards.
37-16-14. Arbitration under chapter deemed special proceeding – Jurisdiction of superior court.
37-16-15. Procedure for hearing of application to court.
37-16-16. Form of award.
37-16-17. Court order confirming award.
37-16-18. Court order vacating award.
37-16-19. Rehearing after vacation of award.
37-16-20. Court order modifying or correcting award.
37-16-21. Notice of motion to vacate, modify, or correct an award.
37-16-22. Entry of judgment – Costs
37-16-23. Filing of papers after judgment.
37-16-24. Effect of judgment.
37-16-25. Appeals.
37-16-26. Satisfaction of award.
37-16-27. Application of sureties.

37-16-1. Short title.

This chapter shall be known as the "Public Works Arbitration Act".

37-16-2. Contract provision for arbitration.

(a) A provision in a written contract executed on or after January 1, 1962, for the construction, alteration, repair, or painting of any public building, sewer, highway, bridge, water treatment or disposal projects one party to which is the state, a city, a town, or an authority, a board, a public corporation, or any similar body created by statute or ordinance or any committee, agency, or subdivision of any of them, to settle by arbitration any dispute or claim arising out of or concerning the performance or interpretation of the contract shall be valid, irrevocable, and enforceable, save upon grounds existing in law or equity for the revocation of the contract.

(b) (1) Every contract for the construction, alteration, repair, painting, or demolition of any public building, sewer, water treatment or disposal project, highway, or bridge one party to which is the state, a city, a town, or an authority, a board, a public corporation, or any similar body created by statute or ordinance or any committee, agency, or subdivision of any of them which has a contract price of ten thousand dollars ($ 10,000) or more and which is executed on or after July 1, 1967, shall contain a provision for arbitration of disputes and claims arising out of or concerning the performance or interpretation of the contract as follows:

(2) "All claims, disputes, and other matters in question arising out of or relating to this contract or the performance or interpretation thereof shall be submitted to arbitration. Arbitration shall be commenced by a demand in writing made by one party to the contract upon the other within a reasonable time after the dispute, claim, or other matter in question arose but in no event after payment in full of the contract price has been made and accepted. The written demand shall contain a statement of the question to be arbitrated and a detailed statement of each item or matter in

dispute and the name of the arbitrator appointed by that party. The other party to the contract within ten (10) days of the receipt of the written demand shall appoint an arbitrator and give notice in writing thereof to the party who commenced arbitration. The two (2) arbitrators appointed by the parties shall within ten (10) days of the date of the appointment of the second arbitrator select a third arbitrator who shall be designated as chairperson and who immediately shall give written notice to the parties of his or her appointment. The third arbitrator shall select a time, date, and place for hearing and give each party five (5) days notice in writing thereof. The date for hearing shall not be more than fifteen (15) days after the date of appointment of the third arbitrator. The award shall be made promptly by the arbitrators and, unless otherwise agreed by the parties or specified by law, no later than thirty (30) days from the date of closing the hearing, or, if oral hearings have been waived, from the date of the transmittal of the final statements and proofs to the arbitrators. The award shall be in writing and shall be signed by a majority of the arbitrators. It shall be executed in the manner required by law. The arbitrator shall provide a written explanation of the reasoning for the award. In the event the party of whom arbitration is demanded shall fail to appoint his or her arbitrator within the time specified or the two (2) arbitrators appointed by the parties are unable to agree on an appointment of the third arbitrator within the time specified, either party may petition the presiding justice of the superior court to appoint a single arbitrator who shall hear the parties and make an award as provided herein. The petitioner shall give five (5) days notice in writing to the other party before filing his or her petition."

(c) Any dispute involving claims less than one hundred thousand dollars ($ 100,000) and associated with construction of a highway or bridge as referred to in subsection (b) shall be submitted to arbitration. Any dispute involving claims of one hundred thousand dollars ($ 100,000) or more and associated with construction of a highway or bridge as referred to in subsection (b) shall only be arbitrated with the consent of the parties. If the parties fail to consent to arbitration and the state of Rhode Island is a party to the dispute, then the claim will proceed in accordance with § 37-13.1-1.

(d) For the purposes of this section, the term "claims" shall not mean the aggregate amount sought under the contract or in the arbitration, but shall refer specifically to each item or matter in dispute for which additional compensation is sought or for each item for which a credit is sought.

(e) Notwithstanding subsection (a) or (b) of this section, if any contract except for highway and bridge contracts provides for an arbitration procedure, and a method of appointment of an arbitrator or arbitrators, that method shall be followed instead of the method provided in subsection (b) of this section.

(f) This section shall apply to all written contracts executed on or after January 1, 1986.

37-16-3. Application to subcontracts.

When a contract described in 37-16-2 is in effect and any party thereto has entered into a subcontract to perform part of the work and/or furnish any materials in connection with the work described in the contract and the terms of the subcontract provide for arbitration of a dispute or claim concerning the performance or interpretation thereof, or the subcontract, expressly or by reference to the terms of the contract, provides that the parties to the subcontract shall comply with the arbitration provisions of the contract, the following shall apply when a request is made or an order of court is entered for arbitration either under the terms of the contract or subcontract.

(a) When arbitration under the contract may adversely affect the interest of a party thereto because of the effect of an award of the arbitrator or arbitrators upon the performance or interpretation of the terms of a subcontract to which he or she is also a party, he or she may require any other party or all other parties to the subcontract to become a party or parties to the arbitration.

(b) When a party to a subcontract makes a demand or an order of court is entered for arbitration under the terms of the subcontract which comply with the provision of this chapter, any party thereto who is also a party to the contract and whose rights under the contract may be adversely affected by the effect of an award of the arbitrator or arbitrators upon the performance or interpretation of the contract, may require any other party to the contract to become a party to the arbitration.

(c) When a party to a contract or to a subcontract is made a party to arbitration by virtue of the provisions of this section, he or she shall have all the rights of a party to arbitration as provided in this chapter except the appointment of an arbitrator. Provided, however, he or she may object to the arbitrators appointed by the parties in which event a single arbitrator shall be appointed as provided in 37-16-2 in the petition of either of the original parties to arbitration. The award of the arbitrator or arbitrators shall be valid and shall be binding on him or her to

the extent that it affects the performance or interpretation of the contract and/or subcontract to which he or she is a party. The award of the arbitrator or arbitrators may be enforced, modified, or vacated as this chapter provides an award made in an arbitration of a contract described in 37-16-2 may be enforced, modified, or vacated.

37-16-4. Stay of legal proceedings pending arbitration.

If any suit or proceedings be brought upon any issue referable to arbitration under contract in writing providing for arbitration, the court in which the suit is pending upon being satisfied that the issue involved in the suit or proceedings is referable to arbitration under the contract, shall on application of one of the parties, stay the trial of the action until arbitration has been held.

37-16-5. Jurisdiction of superior court to enforce arbitration provision and awards.

The entering into a contract in writing providing for arbitration shall be deemed a consent of all parties, including those enumerated in 37-16-2, thereto to the jurisdiction of the superior court of this state to enforce the arbitration provision and any award made pursuant to that provision. A party aggrieved by the failure, neglect, or refusal of another to perform under a contract providing for arbitration, may petition the superior court, or a judge thereof, for an order directing that arbitration proceed in the manner provided for in the contract. Five (5) days' notice in writing of the application shall be served upon the part in default. Service thereof shall be made in the manner specified in the contract, and if no manner specified therein, then in the manner provided by law for personal service of a summons, within or without the state, or substituted service of a summons, or upon satisfactory proof that the party aggrieved has been or will be unable with due diligence to make service in any of the foregoing manners, then notice shall be served in such manner as the court or judge may direct. A judge of the superior court shall hear the parties and upon being satisfied that there is no substantial issue as to the making of the contract or the failure to comply therewith, the court, or the judge thereof, hearing the application, shall make an order directing the parties to proceed to arbitration in accordance with the terms of the contract.

37-16-6. Trial upon evidence of substantial issue.

If evidentiary facts are set forth raising a substantial issue as to the making of the contract or the failure to comply therewith, the court, or the judge thereof, shall proceed immediately to the trial of the issues. Whenever an immediate trial is ordered, the order therefor shall provide that, if the court finds that a written contract providing for arbitration was made, and that there was a failure to comply therewith, the parties shall proceed with the arbitration in accordance with the terms of the contract and the order shall provide that if the court finds that there was no contract or failure to comply with the contract, then the proceeding shall be dismissed.

37-16-7. Method of appointing arbitrators or umpire.

If in the contract providing for arbitration, provision is made for a method of naming or appointing an arbitrator or arbitrators or an umpire, that method shall be followed, but if no method be provided therein, then the parties to the contract shall agree to the method of naming or appointing an arbitrator or arbitrators or an umpire and if the parties shall fail to agree, then the court or the judge thereof upon application of either of the parties after due notice to the other party shall appoint an arbitrator to hear the dispute.

37-16-8. Scheduling and notice of arbitration hearing - Adjournment.

Subject to the terms of the contract, if any are specified therein, the arbitrators selected as prescribed in this chapter must appoint a time and place for the hearing of the matters submitted to them, and must cause notice thereof to be given to each of the parties. They, or a majority of them, may adjourn the hearing from time to time upon the application of either party for good cause shown or upon their own motion, but not beyond the day fixed if a date in the contract, if any, for rendering their award, unless the time so fixed is extended by the written consent of the parties to the contract or their attorney, or the parties have continued with the arbitration without objection to such adjournment.

37-16-9. Power of court to direct prompt hearing.

The court shall have power to direct the arbitrators to proceed promptly with the hearing and determination of the dispute, claim, or matter in question.

37-16-10. Arbitrator's oath - Waiver.

Before hearing any testimony, arbitrators selected as prescribed in this chapter must be sworn, by an officer authorized by law to administer an oath, faithfully and fairly to hear and examine the claim, dispute, or matter in question and to make a just award according to the best of their understanding, unless the oath is waived by the

written consent of the parties to the contract or their attorneys or the parties have continued with the arbitration without objection to the failure of the arbitrators to take the oath.

37-16-11. Powers of arbitrators.

The arbitrator or arbitrators selected as prescribed in this chapter, may require any person to attend before them as a witness; and he or she and they have, and each of them has, the same powers with respect to all the proceedings before them which are conferred upon a board or a member of a board authorized by law to hear testimony. All the arbitrators selected as prescribed in this chapter must meet together and hear all the allegations and proofs of the parties; but an award by a majority of them is valid.

37-16-12. Fees.

In any proceeding under this chapter, unless the parties agree as to the arbitrator's or arbitrators' fees, such fees shall be fixed by the court or the judges thereof who shall require the payment equally by both parties of the arbitrators' fees.

37-16-13. Validity of awards.

An award shall be valid and enforceable according to its terms and under the provisions of this chapter, without previous adjudication of the existence of a contract to arbitrate, subject, nevertheless, to the provisions of this section:

(a) A party who has participated in any of the proceedings before the arbitrator or arbitrators may object to the confirmation of the award only on one or more of the grounds hereinafter specified (provided that he did not continue with the arbitration with notice of the facts or defects upon which his objection is based) because of a failure to comply with 37-16-8 or with 37-16-10 or because of the improper manner of the selection of the arbitrators.

(b) A party who has not participated in any of the proceedings had before the arbitrator or arbitrators and who has not made or been served with an application to compel arbitration under 37-16-5 may also put in issue the making of the contract or the failure to comply therewith, either by a motion for a stay of the arbitration or in opposition to the confirmation of the award. If a notice shall have been personally served upon such party of an intention to conduct the arbitration pursuant to the provisions of a contract specified in the notice, then the issues specified in this subdivision may be raised only by a motion for a stay of the arbitration, notice of which motion must be served within ten (10) days after the service of the notice of intention to arbitrate. The notice must state in substance that unless within ten (10) days after its service, the party served therewith shall serve a notice of motion to stay the arbitration, he or she shall thereafter be barred from putting in issue the making of the contract or the failure to comply therewith. The arbitration hearing shall be adjourned upon service of the notice pending the determination of the motion. Where the opposing party, either on a motion for a stay or in opposition to the confirmation of an award, sets forth evidentiary facts raising a substantial issue as to the making of the contract or the failure to comply therewith, an immediate trial of the same shall be had. In the event that the party is unsuccessful he or she may, nevertheless, participate in the arbitration if the same is still being carried on.

37-16-14. Arbitration under chapter deemed special proceeding - Jurisdiction of superior court.

Arbitration of a claim, dispute, or matter in question under a contract described in this chapter shall be deemed a special proceeding, of which the superior court for Providence County shall have jurisdiction.

37-16-15. Procedure for hearing of application to court.

Any application to the court, or a judge thereof, hereunder shall be made and heard in the manner provided by law for the making and hearing of motions, except as otherwise herein expressly provided.

37-16-16. Form of award.

To entitle the award to be enforced, as prescribed in this chapter, it must be in writing; and, within the time limited in the contract, if any, subscribed by the arbitrator or arbitrators making it and either filed in the office of the clerk of the court having jurisdiction as provided in 37-16-14 or delivered to one of the parties or his or her attorney.

37-16-17. Court order confirming award.

At any time within one year after the award is made, as prescribed in 37-16-16, any party to the contract by the terms of which arbitration was had, may apply to the court having jurisdiction as provided in 37-16-14 for an order confirming the award. Thereupon the court must grant the order unless the award is vacated, modified, or corrected, as prescribed in 37-16-18 and 37-16-19 or unless the award is unenforceable under the provisions of 37-16-13. Notice of the motion must be served upon the adverse party or parties or his or her or their attorneys, as prescribed by law for service of notice of a motion upon an attorney in an action in the same court.

37-16-18. Court order vacating award.

In any of the following cases, the court must make an order vacating the award, upon the application of any party to the controversy which was arbitrated

(a) When the award was procured by fraud.

(b) Where the arbitrator or arbitrators exceeded their powers, or so imperfectly executed them, that a mutual, final, and definite award upon the subject matter submitted was not made.

(c) If there was no valid contract, and the objection has been raised under the conditions set forth in 37-16-13.

37-16-19. Rehearing after vacation of award.

Where an award is vacated, the court, in its discretion may direct a rehearing either before the same arbitrator or arbitrators or before a new arbitrator or arbitrators to be chosen in the manner provided in the contract for the selection of the original arbitrator or arbitrators or as provided for in 37-16-7 and any provision limiting the time in which the arbitrator or arbitrators may make a decision shall be deemed applicable to the new arbitration and to commence from the date of the court's order.

37-16-20. Court order modifying or correcting award.

In any of the following cases, the court must make an order modifying or correcting the award, upon the application of any party to the contract by the terms of which the arbitration was held.

(a) Where there was an evident miscalculation of figures or an evident mistake in the description of any persons, thing, or property referred to in the award.

(b) Where the arbitrator or arbitrators have awarded upon a matter not submitted to them, not affecting the merits of the decision upon the matter submitted.

(c) Where the award is imperfect in a matter of form not affecting the merits of the controversy, and, if it had been a master's report the defect could have been amended or disregarded by the court.

37-16-21. Notice of motion to vacate, modify, or correct an award.

Notice of a motion to vacate, modify, or correct an award must be served upon all adverse parties, or their attorneys, within sixty (60) days after the award is filed or delivered, as prescribed by law for service of notice of a motion upon an attorney in an action; except that in opposition to a motion to confirm an award, any of the grounds specified in 37-16-18 may be set up. For the purpose of the motion, any judge who might make an order, to stay the proceedings in an action brought in the same court may make an order, to be served with the notice of motion, staying the proceedings of an adverse party or parties to enforce the award.

37-16-22. Entry of judgment - Costs.

Upon the granting of an order confirming, modifying, or correcting an award, judgment may be entered in conformity therewith, except as is otherwise prescribed in this chapter. Costs of the application and of the proceedings subsequent thereto, not exceeding twenty-five dollars ($25.00) and disbursements, may be awarded by the court in its discretion. If awarded, the amount thereof must be included in the judgment.

37-16-23. Filing of papers after judgment.

(a) Immediately after entering judgment, the clerk must attach together and file the following papers:

(1) The contract, and each written extension of the time, if any, within which to make the award.
(2) The award.
(3) Each notice, affidavit or other paper used upon an application to confirm, modify, or correct the award, and a copy of each order of the court upon the application.
(4) A copy of the judgment.

(b) The judgment may be docketed as if it was rendered in an action.

37-16-24. Effect of judgment.

The judgment so entered has the same force and effect, in all respects as, and is subject to all the provisions of law relating to a judgment in an action. The judgment may be enforced as if it had been rendered in an action in the court in which it is entered.

37-16-25. Appeals.

An appeal may be taken from an order made in a proceeding under this chapter, or from a judgment entered upon an award. The proceedings upon the appeal, including the judgment thereupon and the enforcement of the judgment, are governed by the provisions of statute and rule regulating appeal in actions as far as they are applicable.

37-16-26. Satisfaction of award.

(a) An award which requires the payment of a sum of money by a city, town, or the state or any body described in 37-16-2 created or organized by or through the authority of any of them, shall be satisfied to the extent of payment of that sum by payment thereof to the party to whom the award was made by the treasurer or officer exercising the duties of a treasurer thereof from its general funds.

(b) An award which requires the payment of a sum of money to a city, a town, or the state or any body described in 37-16-2 created or organized by or through the authority of any of them shall be satisfied to the extent of payment of that sum by payment thereof to its treasurer or officer exercising the duties of a treasurer thereof who shall deposit the same in its general funds.

37-16-27. Application to sureties.

(a) If a contractor principal on a bond furnished to guarantee performance or payment on a construction contract and the claimant are parties to a written contract with a provision to submit to arbitration any controversy thereafter arising under the contract, or subject to arbitration as provided in 37-16-2(b), the arbitration provisions shall apply to the surety for all disputes involving questions of the claimant's right of recovery against the surety. Either the claimant, the contractor principal, or surety may demand arbitration in accordance with the written contract or as provided in 37-16-2(b) if applicable in one arbitration proceeding, provided that the provisions of 37-16-3 shall be applicable to any such demand for arbitration. The arbitration award shall decide all controversies subject to arbitration between the claimant, on the one hand, and the contractor principal and surety on the other hand, including all questions involving liability of the contractor principal and surety on the bond, but a claimant must file suit for recovery against the surety within the time limits set forth in 37-12-2 and 37-12-5. The arbitration shall be in accordance with this chapter and the court shall enter judgment thereon as provided therein.

(b) The arbitrator or arbitrators, if more than one, shall make findings of fact as to the compliance with the requirements for recovery against the surety, and those findings of fact shall be a part of the award binding on all parties to the arbitration.

TITLE 45

CHAPTER 55 AWARD OF MUNICIPAL CONTRACTS

SECTIONS

45-55-1 Legislative findings

45-55-2. Method of source selection
45-55-3. Purchasing agent - Appointment - Duties.
45-55-4. Definitions.
45-55-5. Competitive sealed bidding.
45-55-5.1. Business exempt.
45-55-5.2. Town of North Smithfield - Exemption.
45-55-6. Competitive negotiation.
45-55-7. Negotiations after unsuccessful competitive sealed bidding
45-55-8. Sole source procurement and emergency procurements.
45-55-8.1 Qualification based selection of architects and engineers.
45-55-9. Small purchases.
45-55-10. Cancellation of invitation for bids and requests for proposals.
45-55-11. Responsibilities of bidders and offerors
45-55-12. Prequalification of contractors - General.
45-55-13. Exclusion of state mandated costs.
45-55-13.1. Exclusion of multi-cities or towns insurance corporations and cooperative risk management programs.
45-55-13.2. Exclusion of multi-cities or towns energy aggregation programs.

45-55-13.3. Exclusion of multi-school district combined purchasing consortia

45-55-14. Staff consultants.
45-55-15. Severability.
45-55-16 Prohibition against the use of lead based paints.
44-55-17 Penalties

45-55-1. Legislative findings.

It is hereby declared that a need exists to establish a uniform system for the award of contracts by municipalities, utilizing open cooperative bids.

45-55-2. Method of source selection.

Except as otherwise authorized by law, all municipal contracts shall be awarded by:
(1) Competitive sealed bidding, pursuant to 45-55-5;
(2) Competitive negotiations, pursuant to 45-55-6;
(3) Non-competitive negotiations, pursuant to 45-55-7 and 45-55-8;
(4) Small purchase procedures, pursuant to 45-55-9.
(5) Qualification based selection (QBS) process for architects/engineers pursuant to 45-55-8.1

45-55-3. Purchasing agent - Appointment - Duties.

Within each city or town or quasi public agency there shall be designated a person or persons to act as purchasing officer to exercise the powers and duties as set forth in this chapter.

45-55-4. Definitions.

The words defined in this section have the following meanings whenever they appear in this chapter, unless the context in which they are used clearly requires a different meaning or a different definition is prescribed for a particular section, group of sections or provision.

(1) "Business" means any corporation, partnership, individual, sole proprietorship, joint stock company, joint venture, or any other legal entity through which business is conducted.

(2) "Change order" means a written order signed by the purchasing agent, or contractor directing or allowing the contractor to make changes which the changes clause of the contract authorizes the purchasing agent or contractor to order without the consent of the contractor or purchasing agent.

(3) "Construction" means the process of building, altering, repairing, improving, or demolishing any public structures or building, or other public improvements of any kind to any public real property. It does not include the routine maintenance or repair of existing structures, buildings, or real property performed by salaried employees of the municipality in the usual course of their job.

(4) "Contract" means all types of agreements, including grants and orders, for the purchase or disposal of supplies, services, construction, or any other item. It includes awards; contracts of a fixed-price, cost, cost-plus-a-fixed-fee, or incentive type; contracts providing for the issuance of job or task orders; leases; letter contracts, purchase orders, and construction management contracts. It also includes supplemental agreements with respect to any of the preceding. "Contract" does not include labor contracts with employees of the municipality.

(5) "Contract modification" means any written alteration in the specifications, delivery point, rate of delivery, contract period, price, quantity, or other contract provisions of any existing contract, whether accomplished by unilateral action in accordance with a contract provision, or by mutual action of the parties to the contract. It includes bilateral actions, as supplemental agreements, and unilateral actions, as change orders, administrative changes, notices of termination, and notices of the exercise of a contract option.

(6) "Contractor" means any person having a contract with a municipality.

(8) "Data" means recorded information, regardless of form or characteristic.

(8) "Designee" means a duly authorized representative of a person holding a superior position.

(9) "Employee" means an individual drawing a salary from a municipality, whether elected or not, and any non-salaried individual performing personal services for any municipality.

(10) "May" means permissive.

(11) "Municipality" means the individual cities and towns of the state of Rhode Island.

(12) "Negotiation" means contracting by either of the methods described in §§ 45-55-6, 45-55-7, and 45-55-8.

(13) "Person" means any business, individual, organization, or group of individuals.

(14) "Procurement" means the purchasing, buying, renting, leasing, or otherwise obtaining of any supplies, services, or construction. It also includes all functions that pertain to the obtaining of any supply, service, or construction item, including description of requirements, selection and solicitation of sources, preparation and award of contract, and all phases of contract administration.

(15) "Purchasing officer" means the person designated in each municipality or quasi public agency pursuant to section 45-55-3.

(16) "Regulations" means rules and regulations adopted by the individual cities or towns, concerning the implementation of the provisions of this chapter.

(17) "Services" means the rendering, by a contractor, of its time and effort rather than the furnishing of a specific end product, other than reports which are merely incidental to the required performance of services. "Services" does not include labor contracts with employees of governmental agencies.

(18) "Shall" means imperative.

(19) "Supplemental agreement" means any contract modification which is accomplished by the mutual action of the parties.

(20) "Supplies" means all property, including, but not limited, to leases of real property, printing and insurance, except land or permanent interest in land.

45-55-5. Competitive sealed bidding.

(a) Contracts exceeding the amount provided by 45-55-9 shall be awarded by competitive bidding unless they are professional engineering/architectural services pursuant to 45-55-8.1 and it is determined in writing that this method is not practicable. Factors to be considered in determining whether competitive sealed bidding is practicable shall include whether:

(1) Specifications can be prepared that permit award on the basis of either the lowest qualified bid price or the lowest qualified evaluated bid price; and

(2) The available sources, the time and place of performance, and other relevant circumstances as are appropriate for the use of competitive sealed bidding.

(b) The invitation for bids shall state whether award shall be made on the basis of the lowest bid price or the lowest evaluated or responsive bid price. If the latter basis is used, the objective measurable criteria to be utilized shall be stated in the invitation for bids, if available.

(c) Adequate public notice of the invitation for bids shall be given a sufficient time prior to the date stated in the0020notice for the opening of bids. Notice may include publication in a newspaper of general circulation in the state as determined by the purchasing officer for the municipality not less than seven (7) days nor more than twenty-one (21) days before the date set for opening of the bids. The purchasing officer may make a written determination that the twenty-one (21) day limitation needs to be waived. The written determination shall state the reason why the twenty-one (21) day limitation is being waived and shall state the number of days, giving a minimum and maximum, before the date set for the opening of bids when public notice is to be given.

(4) Bids shall be opened publicly in full view of the public at the time and place designated in the invitation for bids. Each bid, together with the name of the bidder, shall be recorded and an abstract made available for public inspection. Subsequent to the awarding of the bid, all documents pertinent to the awarding of the bid shall be made available and open to public inspection and retained in the bid file.

(5) The contract shall be awarded with reasonable promptness by written notice to the responsive and responsible bidder whose bid is either the lowest bid price, or lowest evaluated or responsive bid price.

(6) Correction or withdrawal of bids may be allowed only to the extent permitted by regulations issued by the purchasing officer.

45-55-5.1. Business exempt.

The North Kingstown Bus Contractors Association and the Scituate School Bus Owners Club shall be exempt from the provisions of this chapter.

45-55-5.2. Town of North Smithfield - Exemption.

The town of North Smithfield is exempt from the provisions of this chapter with regard to the contracting for fire and rescue services with the Primrose Volunteer Fire Department and/or North Smithfield Fire Department and/or their respective successors and assigns.

45-55-6. Competitive negotiation.

(a) When, under regulations adopted by the city or town council, the purchasing agent determines in writing that the use of competitive sealed bidding is not practicable, and except as provided in 45-55-8, 45-55-9, and 45-55-10 a contract may be awarded by competitive negotiation.

(b) Adequate public notice of the request for proposals shall be given in the same manner as provided in 45-55-5(c).

(c) Contracts may be competitively negotiated when it is determined, in writing, by the purchasing agent that the bid prices received by competitive sealed bidding either are unreasonable as to all or part of the requirements, or were not independently reached in open competition, and for which:

(1) Each competitive bidder has been notified of the intention to negotiate and is given reasonable opportunity to negotiate; and

(2) The negotiated price is lower than the lowest rejected bid by any competitive bidder; and

(3) The negotiated price is the lowest negotiated price offered by a competitive offeror.

(d) The request for proposals shall indicate the relative importance of price and other evaluation factors.

(e) Award shall be made to the responsible offeror whose proposal is determined in writing to be the most advantageous to the municipality taking into consideration price and the evaluation factors set forth in the request for proposals.

(f) Written or oral discussions shall be conducted with all responsible offerors who submit proposals determined, in writing, to be reasonably susceptible of being selected for award. Discussions shall not disclose any information derived from proposals submitted by competing offerors. Discussions need not be conducted:

(1) With respect to prices, where such prices are fixed by law or regulation, except that consideration shall be given to competitive terms and conditions; or

(2) Where time of delivery or performance will not permit discussions; or

(3) Where it can be clearly demonstrated and documented from the existence of adequate competition or accurate prior cost experience with the particular supply, service, or construction item, that acceptance of an initial offer without discussion would result in fair and reasonable prices, and the request for proposals notifies all offerors of the possibility that award may be made on the basis of the initial offers.

45-55-7. Negotiations after unsuccessful competitive sealed bidding.

(a) In the event that all bids submitted pursuant to competitive sealed bidding under 45-55-5 result in bid prices in excess of the funds available for the purchase, and the purchasing officer determines in writing:

(1) That there are no additional funds available from any source so as to permit an award to the lowest responsive and responsible bidder, and

(2) The best interest of the municipality will not permit the delay attendant to a re-solicitation under revised specifications, or for revised quantities, under competitive sealed bidding as provided in 45-55-5, then a negotiated award may be made be made as stated in subsection (b) or (c) of this section.

(b) Where there is more than one bidder, competitive negotiations pursuant to 45-55-6, shall be conducted with the three (3) (two (2) if there are only two (2)) bidders determined in writing, to be the lowest responsive and responsible bidders to the competitive sealed bid invitation. Competitive negotiations shall be conducted under the following restrictions:

(1) If discussions pertaining to the revision of the specifications or quantities are held with any potential offeror, all other potential offerors shall be afforded an opportunity to take part in the discussions; or

(2) A request for proposals, based upon revised specifications or quantities, shall be issued as promptly as possible, shall provide for an expeditious response to the revised requirements, and shall be awarded upon the basis of the lowest bid price, or lowest evaluated bid price submitted by any responsive and responsible offeror.

(c) When after competitive sealed bidding, it is determined in writing, that there is only one responsive and responsible bidder, a noncompetitive negotiated award may be made with such bidder in accordance with 45-55-8.

45-55-8. Sole source procurement and emergency procurements.

(a) A contract may be awarded for a supply, service, or construction item without competition when, under published regulations, the purchasing officer determines, in writing, that there is only one source for the required supply, service, or construction item.

(b) Notwithstanding any other provision of this chapter, the purchasing agent may make or authorize others to make emergency procurements when there exists a threat to public health, welfare, or safety under emergency conditions as defined in regulations or where the procurement will be in the best interest of the city as established by properly promulgated rules and regulations; provided, that such emergency procurements shall be made with such competition as is practicable under the circumstances. A written determination of the basis for the emergency, and for the selection of the particular contractor, shall be included in the contract file.

45-55-8.1. Qualification based selection of architects and engineers.

When the purchasing agent determines that the city or town needs the services of a professional architect or engineer, the purchasing agent shall follow the qualification based selection process for the procurement of architectural and engineering consulting services.

45-55-9. Small purchases.

Procurements, not to exceed an aggregate amount of ten thousand dollars ($10,000) for construction and five thousand dollars ($5,000) for all other purchases may be made in accordance with small purchase regulations promulgated by the municipality. These amounts shall be increased or decreased annually hereafter at the same rate as the Boston Regional Consumer Price Index. Procurement requirements shall not be artificially divided so as to constitute a small purchase under this section. A municipality may further reduce the aggregate purchase amount, as provided for in this section by ordinance.

45-55-10. Cancellation of invitation for bids and requests for proposals.

An invitation for bids, a request for proposals, or other solicitation may be canceled, or all bids or proposals rejected, if it is determined, in writing, that such action if taken is not in the best interest of the municipality and approved by the chief purchasing officer.

45-55-11. Responsibilities of bidders and offerors.

(1) A written determination of responsibility of a bidder or offeror shall be made and it shall be made in accordance with regulations issued by the municipality.

A reasonable inquiry to determine the responsibility of a bidder or offeror may be conducted. The failure of a bidder or offeror to promptly supply information in connection with a reasonable inquiry may be grounds for a determination of non-responsibility with respect to a bidder or offeror.

(2) Except as otherwise provided, by law, information furnished by a bidder or offeror pursuant to this section may not be disclosed outside of the purchasing department administering the contract without prior written consent of the bidder or offeror.

45-55-12. Prequalification of contractors - General.

The municipality may provide for prequalification of suppliers as responsible prospective contractors for particular types of supplies, services, and construction. Municipalities which choose to provide for prequalification of suppliers shall adopt regulations for prequalification in the same manner provided for in the adoption of ordinances in the manner provided for in the legislative or home rule charter of the municipality. Solicitation mailing lists of

potential contractors of supplies, services, and construction shall include but need not be limited to prequalified contractors. Prequalification shall not foreclose a written determination:

(1) Between the time of the bid opening or receipt of offers and the making of an award, that a prequalified supplier is not responsible; or

(2) That a supplier who is not prequalified at the time of bid opening or receipt of offers is responsible.

45-55-13. Exclusion of state mandated costs.

The provisions of 45-13-7 through 45-13-10 do not apply to this section.

45-55-13.1. Exclusion of multi-cities or towns insurance corporations and cooperative risk management programs.

The provisions of this chapter shall not apply to entities organized pursuant to section 45-5-20.1. Those entities are exempt from all of the provisions of this chapter.

45-55-13.2. Exclusion of multi-cities or towns energy aggregation programs.

The provisions of this chapter do not apply to entities organized for the purpose of negotiating the purchase of electric power pursuant to § 39-3-1.1, or energy or energy related services. Those entities are exempt from all provisions of this chapter.

45-55-13.3. Exclusion of multi-school district combined purchasing consortia.

The provisions of this chapter do not apply to purchases and contracts entered into by those consortia established pursuant to § 16-2-9.2, and such entities shall be exempt from all provisions of this chapter.

45-55-14. Staff consultants.

The procurement of the service of an attorney, physician or dentist by a municipality, is exempt from the provisions of this chapter.

45-55-15. Severability.

If any one or more sections, clauses, sentences or parts of this chapter are for any reason be adjudged unconstitutional or otherwise invalid in any court, that judgment shall not affect, impair or invalidate the remaining provisions of this chapter but shall be confined in its operation to the specific provisions so held unconstitutional or invalid and the inapplicability or invalidity of any section, clause or provisions of this chapter in any one or more instances or circumstances shall not be taken to affect or prejudice in any way its applicability or validity in any other instance.

45-55-16. Prohibition against the use of lead based paints.

When purchasing paint products or contracting or subcontracting for painting, construction, improvement, completion, or repair of any public buildings, public road, public bridge, or public construction, all municipalities, as defined by 45-55-4(11), shall be prohibited from the use of lead based paint.

45-55-17. Penalties.

Any person who knowingly and intentionally violates any provision of this chapter shall be subject to a misdemeanor, punishable by a fine of not more than five hundred dollars ($500), or by imprisonment for not more than one year, or both.

APPENDIX D

EPA, Davis-Bacon Prevailing Wage Requirements

INDEX

- Appendix D - EPA Davis-Bacon Prevailing Wage Requirements - Special Notes
- Davis Bacon Term and Condition For Revolving Loan Fund Grants to Governmental/ Quasi-Governmental Organizations

APPENDIX D
EPA DAVIS-BACON PREVAILING WAGE REQUIREMENTS SPECIAL NOTES

1.1 This contract is subject to the requirements of the Davis-Bacon Prevailing Wage Regulations as administered by the Environmental Protection Agency (EPA). Reference is made to Davis Bacon Term and Condition for Revolving Fund Grants to Governmental/Quasi-Governmental Organizations, which is bound within this appendix of the Contract Specifications.

1.2 The Contractor is required to submit a Statement of Compliance as part of the required weekly certified payrolls submissions. Reference is made to Paragraph ii(B) of Article (3) Payrolls and Basic Records of Davis Bacon Term and Condition For Revolving Loan Fund Grants to Governmental/Quasi-Governmental Organizations. A copy of the US DOL Form WH-347 has been provided within this appendix of the Contract Specifications.

Davis Bacon Term and Condition
For
Revolving Loan Fund Grants to Governmental/Quasi-Governmental Organizations

DAVIS BACON PREVAILING WAGE TERM AND CONDITION

The following terms and conditions specify how Recipients will assist EPA in meeting its Davis Bacon (DB) responsibilities when DB applies to EPA awards of financial assistance under the Recovery Act or any other statute which makes DB applicable to EPA financial assistance. If a Recipient has questions regarding when DB applies, obtaining the correct DB wage determinations, DB contract provisions, or DB compliance monitoring, they should contact the regional Brownfields Coordinator or Project Officer for guidance.

1. Applicability of the Davis Bacon Prevailing Wage Requirements

For the purposes of this term and condition, EPA has determined that all construction, alteration and repair activity involving the remediation of hazardous substances, including excavation and removal of hazardous substances, construction of caps, barriers, structures which house treatment equipment, and abatement of contamination in buildings, is subject to DB.

With regard to remediation of petroleum contamination, following consultation with the U.S. Department of Labor, EPA has determined that for remediation of petroleum contamination at brownfields sites, DB prevailing wage requirement apply when the project includes:

(i) Installing piping to connect households or businesses to public water systems or replacing public water system supply well(s) and associated piping due to groundwater contamination,

(ii) Soil excavation/replacement when undertaken in conjunction with the installation of public water lines/wells described above, or

(iii) Soil excavation/replacement, tank removal, and restoring the area by paving or pouring concrete when the soil excavation/replacement occurs in conjunction with both tank removal and paving or concrete replacement.

In the above circumstances, all the laborers and mechanics employed by contractors and subcontractors will be covered by the DB requirements for all construction work performed on the site. Other cleanup activities at brownfields sites contaminated by petroleum such as in situ remediation, and soil excavation/replacement and tank removal when not in conjunction with paving or concrete replacement, will normally not trigger DB requirements. However, if a RLF Recipient encounters a unique situation at a site (e.g. unusually extensive excavation) that presents uncertainties regarding DB applicability, the RLF Recipient must discuss the situation with EPA before authorizing work on that site.

Note: If an RLF Recipient encounters a unique situation at a petroleum or hazardous substance site that presents uncertainties regarding DB applicability, the RLF Recipient must discuss the situation with EPA before advising a borrower or subrecipient that DB does not apply.

2. Obtaining Wage Determinations

(a) The RLF Recipient is responsible for obtaining DB wage determinations from DOL and ensuring the borrowers and subrecipient include the correct wage determinations in solicitations for competitive contracts by way of requests for bids, proposals, quotes or other methods for soliciting contracts (solicitations), new contracts, and task orders, work assignments or similar instruments issued to existing contractors (ordering instruments).

(b) Unless otherwise instructed by EPA on a project specific basis, the RLF Recipient shall use the following DOL General Wage Classifications for the locality in which the construction activity subject to DB will take place. RLF Recipients must obtain wage determinations for specific localities at www.wdol.gov.

(i) For solicitations, new contracts and ordering instruments for the excavation and removal of hazardous substances, construction of caps, barriers and similar activities the RLF Recipient shall use the "Heavy Construction" Classification.

(ii) For solicitations, new contracts and ordering instruments for the construction of structures which house treatment equipment. And abatement or contamination in buildings (other than residential structures less than 4 stories in height) the RLF Recipient shall use "Building Construction" classification.

(iii) When soliciting competitive contracts or issuing ordering instruments for the abatement of contamination in residential structures less than 4 stories in height the Recipient shall use "Residential Construction" classification.

(iv) For solicitations, new contracts and ordering instruments for soil excavation/replacement, tank removal, and restoring the area by paving or pouring concrete when the soil excavation/replacement occurs in conjunction with both tank removal and paving or concrete replacement at current or former service station sites, hospitals, fire stations, industrial or freight terminal facilities, or other sites that are associated with a facility that is not used solely for the underground storage of fuel or other contaminant the Recipient shall use the "Building Construction" classification.

(v) For solicitations, new contracts and ordering instruments for soil excavation/replacement, tank removal, and restoring the area by paving or pouring concrete when the soil excavation/replacement occurs in conjunction with both tank removal and paving or concrete replacement at a facility that is used solely for the underground storage of fuel or other contaminant the Recipient shall use the "Heavy Construction" classification.

Recipients must discuss unique situations that may not be covered by the General Wage Classifications described above with EPA. If, based on discussions with an RLF Recipient, EPA determines that DB applies to a unique situation involving a Brownfields site contaminated with

petroleum (e.g. unusually extensive excavation) the Agency will advise the Recipient which General wage determination to use based on the nature of the construction activity at the site.

(b) RLF Recipients shall include a term and condition in all loans and subawards which ensures that the borrower or subrecipient complies with the above requirements for including wage determinations in solicitations, new contracts and ordering instruments. The RLF Recipient must ensure that prime contracts entered into by borrowers and subrecipient contain a provision requiring that subcontractors follow the wage determination incorporated into the prime contract.

(i) While the borrower or subrecipient's solicitation remains open, the RLF Recipient shall require that the borrower or subrecipient monitor www.wdol.gov on a weekly basis to ensure that the wage determination contained in the solicitation remains current. The RLF Recipient shall require that the borrower or subrecipient amend the solicitation if DOL issues a modification more than 10 days prior to the closing date (i.e. bid opening) for the solicitation. If DOL modifies or supersedes the applicable wage determination less than 10 days prior to the closing date, the RLF Recipient may, on behalf of the borrower or subrecipient, request a finding from EPA that there is not a reasonable time to notify interested contractors of the modification of the wage determination. EPA will provide a report of the Agency's finding to the RLF Recipient.

(ii) If the borrower or subrecipient does not award the contract within 90 days of the closure of the solicitation, any modifications or supersedes DOL makes to the wage determination contained in the solicitation shall be effective unless EPA, at the request of the RLF Recipient, obtains an extension of the 90 day period from DOL pursuant to 29 CFR 1.6(c) (3) (iv). The RLF Recipient shall ensure that borrowers and subrecipients monitor www.wdol.gov on a weekly basis if the borrower or subrecipient does not award the contract within 90 days of closure of the solicitation to ensure that wage determinations contained in the solicitation remain current. If the applicable wage determination changes, the RLF Recipient shall provide the borrower or subrecipient with the current wage determination from www.wdol.gov.

(iii) If the borrower or subrecipient carries out Brownfields cleanup activity subject to DB by issuing a task order, work assignment or similar instrument to an existing contractor (ordering instrument) rather than by publishing a solicitation, the RLF Recipient shall ensure that the borrower or subrecipient inserts the appropriate DOL wage determination from www.wdol.gov into the ordering instrument.

(c) RLF Recipients shall ensure that borrowers and subrecipients review all subcontracts subject to DB entered into by prime contractors to verify that the prime contractor has required its subcontractors to include the applicable wage determinations.

(d) As provided in 29 CFR 1.6(f), DOL may issue a revised wage determination applicable to a a borrower or subrecipient's contract after the award of a contract or the issuance of an ordering instrument if DOL determines that the borrower or subrecipient has failed to incorporate a wage determination or has used a wage determination that clearly does not apply to the contract or

ordering instrument. If this occurs, the RLF Recipient shall require that the borrower or subrecipient either terminate the contract or ordering instrument and issue a revised solicitation or ordering instrument or incorporate DOL's wage determination retroactive to the beginning of the contract or ordering instrument by change order. The RLF Recipient must ensure that the borrower or subrecipient compensates the contractor for any increases in wages resulting from the use of DOL's revised wage determination. RLF Recipients may, but are not required to, provide additional loan or subaward funds to the borrower or subrecipient for this purpose.

3. Contract and Subcontract Provisions

(a) The RLF Recipient shall ensure that borrowers and subrecipients insert in full in any contract in excess of $2,000 which is entered into for the actual construction, alteration and/or repair, including painting and decorating, of a public building or public work, or building or work financed in whole or in part from Federal funds or in accordance with guarantees of a Federal agency or financed from funds obtained by pledge of any contract of a Federal agency to make a loan, grant or annual contribution (except where a different meaning is expressly indicated), and which is subject to DB, the following labor standards provisions.

(1) Minimum wages.

(i) All laborers and mechanics employed or working upon the site of the work will be paid unconditionally and not less often than once a week, and without subsequent deduction or rebate on any account (except such payroll deductions as are permitted by regulations issued by the Secretary of Labor under the Copeland Act (29 CFR part 3)), the full amount of wages and bona fide fringe benefits (or cash equivalents thereof) due at time of payment computed at rates not less than those contained in the applicable wage determination of the Secretary of Labor which the RLF Recipient obtained under the procedures specified in Item 2, above, and made a part hereof, regardless of any contractual relationship which may be alleged to exist between the contractor and such laborers and mechanics.

Contributions made or costs reasonably anticipated for bona fide fringe benefits under section 1(b)(2) of the Davis-Bacon Act on behalf of laborers or mechanics are considered wages paid to such laborers or mechanics, subject to the provisions of paragraph (a)(1)(iv) of this section; also, regular contributions made or costs incurred for more than a weekly period (but not less often than quarterly) under plans, funds, or programs which cover the particular weekly period, are deemed to be constructively made or incurred during such weekly period. Such laborers and mechanics shall be paid the appropriate wage rate and fringe benefits on the wage determination for the classification of work actually performed, without regard to skill, except as provided in § 5.5(a)(4). Laborers or mechanics performing work in more than one classification may be compensated at the rate specified for each classification for the time actually worked therein: Provided that the employer's payroll records accurately set forth the time spent in each classification in which work is performed. The wage determination (including any additional classification and wage rates conformed under paragraph (a)(1)(ii) of this section) and the Davis-Bacon poster (WH-1321) shall be posted at all times by the contractor and its subcontractors at the site of the work in a prominent and accessible place where it can be easily seen by the workers. RLF Recipients shall require that the contractor and subcontractors include the name of

the RLF Recipient employee or official responsible for monitoring compliance with DB on the poster.

(ii)(A) The RLF Recipient, on behalf of EPA, shall require that contracts and subcontracts entered into by borrowers and subrecipients provide that any class of laborers or mechanics, including helpers, which is not listed in the wage determination and which is to be employed under the contract shall be classified in conformance with the wage determination. The EPA Award Official shall approve, upon the request or the RLR Recipient an additional classification and wage rate and fringe benefits therefore only when the following criteria have been met:

(1) The work to be performed by the classification requested is not performed by a classification in the wage determination; and

(2) The classification is utilized in the area by the construction industry; and

(3) The proposed wage rate, including any bona fide fringe benefits, bears a reasonable relationship to the wage rates contained in the wage determination.

(B) If the contractor and the laborers and mechanics to be employed in the classification (if known), or their representatives, and the RLF Recipient and the borrower or subrecipient agree on the classification and wage rate (including the amount designated for fringe benefits where appropriate), a report of the action taken shall be sent by the RLF Recipient to the EPA Award Official. The Award Official will transmit the report, to the Administrator of the Wage and Hour Division, Employment Standards Administration, U.S. Department of Labor, Washington, DC 20210. The Administrator, or an authorized representative, will approve, modify, or disapprove every additional classification action within 30 days of receipt and so advise the award official or will notify the award official within the 30-day period that additional time is necessary.

(C) In the event the contractor, the laborers or mechanics to be employed in the classification or their representatives, ***and the RLF Recipient and borrower or subrecipient*** do not agree on the proposed classification and wage rate (including the amount designated for fringe benefits, where appropriate), the RLF Recipient shall provide a report on the disagreement which includes submissions by all interested parties to the EPA Award Official. The Award Official shall refer the questions, including the views of all interested parties and the recommendation of the award official, to the Administrator for determination. The Administrator, or an authorized representative, will issue a determination within 30 days of receipt and so advise the Award Official or will notify the Award Official within the 30-day period that additional time is necessary. The Award Official will direct that the RLF Recipient take appropriate action to implement the Administrator's determination.

(D) The wage rate (including fringe benefits where appropriate) determined pursuant to paragraphs (a)(1)(ii)(B) or (C) of this section, shall be paid to all workers performing work in the classification under this contract from the first day on which work is performed in the classification.

(iii) Whenever the minimum wage rate prescribed in the contract for a class of laborers or mechanics includes a fringe benefit which is not expressed as an hourly rate, the contractor shall either pay the benefit as stated in the wage determination or shall pay another bona fide fringe benefit or an hourly cash equivalent thereof.

(iv) If the contractor does not make payments to a trustee or other third person, the contractor may consider as part of the wages of any laborer or mechanic the amount of any costs reasonably anticipated in providing bona fide fringe benefits under a plan or program, Provided, That the Secretary of Labor has found, upon the written request of the contractor, that the applicable standards of the Davis-Bacon Act have been met. The Secretary of Labor may require the contractor to set aside in a separate account assets for the meeting of obligations under the plan or program.

(1) Withholding. The RLF Recipient, upon written request of the Award Official or an authorized representative of the Department of Labor, shall withhold or cause the borrower or subrecipient to withhold from the contractor under the affected contract or any other Federal contract with the same prime contractor, or any other federally-assisted contract subject to Davis-Bacon prevailing wage requirements, which is held by the same prime contractor, so much of the accrued payments or advances as may be considered necessary to pay laborers and mechanics, including apprentices, trainees, and helpers, employed by the contractor or any subcontractor the full amount of wages required by the contract. In the event of failure to pay any laborer or mechanic, including any apprentice, trainee, or helper, employed or working on the site of the work, all or part of the wages required by the contract, EPA may, after written notice to the contractor, or RLF Recipient take such action as may be necessary to cause the suspension of any further payment, advance, or guarantee of funds until such violations have ceased.

(2) Payrolls and basic records.

(i) Payrolls and basic records relating thereto shall be maintained by the contractor during the course of the work and preserved for a period of three years thereafter for all laborers and mechanics working at the site of the work. Such records shall contain the name, address, and social security number of each such worker, his or her correct classification, hourly rates of wages paid (including rates of contributions or costs anticipated for bona fide fringe benefits or cash equivalents thereof of the types described in section 1(b) (2) (B) of the Davis-Bacon Act), daily and weekly number of hours worked, deductions made and actual wages paid. Whenever the Secretary of Labor has found under 29 CFR 5.5(a)(1)(iv) that the wages of any laborer or mechanic include the amount of any costs reasonably anticipated in providing benefits under a plan or program described in section 1(b)(2)(B) of the Davis-Bacon Act, the contractor shall maintain records which show that the commitment to provide such benefits is enforceable, that the plan or program is financially responsible, and that the plan or program has been communicated in writing to the laborers or mechanics affected, and records which show the costs anticipated or the actual cost incurred in providing such benefits. Contractors employing apprentices or trainees under approved programs shall maintain written evidence of the registration of apprenticeship programs and certification of trainee programs, the registration of the apprentices and trainees, and the ratios and wage rates prescribed in the applicable programs.

(ii)(A) The contractor shall submit weekly for each week in which any contract work is performed a copy of all payrolls to the borrower or subrecipient and to the RLF Recipient who will maintain the records on behalf of EPA. The payrolls submitted shall set out accurately and completely all of the information required to be maintained under 29 CFR 5.5(a)(3)(i), except that full social security numbers and home addresses shall not be included on weekly transmittals. Instead the payrolls shall only need to include an individually identifying number for each employee (e.g., the last four digits of the employee's social security number). The required weekly payroll information may be submitted in any form desired. Optional Form WH-347 is available for this purpose from the Wage and Hour Division Web site at https://www.dol.gov/whd/programs/dbra/wh347.htm or its successor site. The prime contractor is responsible for the submission of copies of payrolls by all subcontractors. Contractors and subcontractors shall maintain the full social security number and current address of each covered worker, and shall provide them upon request to the RLF Recipient for transmission to the EPA, if requested by EPA, the contractor, or the Wage and Hour Division of the Department of Labor for purposes of an investigation or audit of compliance with prevailing wage requirements. It is not a violation of this section for a prime contractor to require a subcontractor to provide addresses and social security numbers to the prime contractor for its own records, without weekly submission to the RLF Recipient.

(B) Each payroll submitted to the RLF Recipient shall be accompanied by a "Statement of Compliance," signed by the contractor or subcontractor or his or her agent who pays or supervises the payment of the persons employed under the contract and shall certify the following:

(1) That the payroll for the payroll period contains the information required to be provided under § 5.5 (a) (3) (ii) of Regulations, 29 CFR part 5, the appropriate information is being maintained under § 5.5 (a) (3) (i) of Regulations, 29 CFR part 5, and that such information is correct and complete;

(2) That each laborer or mechanic (including each helper, apprentice, and trainee) employed on the contract during the payroll period has been paid the full weekly wages earned, without rebate, either directly or indirectly, and that no deductions have been made either directly or indirectly from the full wages earned, other than permissible deductions as set forth in Regulations, 29 CFR part 3;

(3) That each laborer or mechanic has been paid not less than the applicable wage rates and fringe benefits or cash equivalents for the classification of work performed, as specified in the applicable wage determination incorporated into the contract.

(C) The weekly submission of a properly executed certification set forth on the reverse side of Optional Form WH-347 shall satisfy the requirement for submission of the "Statement of Compliance" required by paragraph (a)(3)(ii)(B) of this section.

(D) The falsification of any of the above certifications may subject the contractor or subcontractor to civil or criminal prosecution under section 1001 of title 18 and section 231 of title 31 of the United States Code.

(iii) The contractor or subcontractor shall make the records required under paragraph (a)(3)(i) of this section available for inspection, copying, or transcription by authorized representatives of the EPA or the Department of Labor, and shall permit such representatives to interview employees during working hours on the job. If the contractor or subcontractor fails to submit the required records or to make them available, EPA may, after written notice to the contractor, ***Recipient, borrower or recipient,*** sponsor, applicant, or owner, take such action as may be necessary to cause the suspension of any further payment, advance, or guarantee of funds. Furthermore, failure to submit the required records upon request or to make such records available may be grounds for debarment action pursuant to 29 CFR 5.12.

(4) Apprentices and Trainees

(i) Apprentices. Apprentices will be permitted to work at less than the predetermined rate for the work they performed when they are employed pursuant to and individually registered in a bona fide apprenticeship program registered with the U.S. Department of Labor, Employment and Training Administration, Office of Apprenticeship Training, Employer and Labor Services, or with a State Apprenticeship Agency recognized by the Office, or if a person is employed in his or her first 90 days of probationary employment as an apprentice in such an apprenticeship program, who is not individually registered in the program, but who has been certified by the Office of Apprenticeship Training, Employer and Labor Services or a State Apprenticeship Agency (where appropriate) to be eligible for probationary employment as an apprentice. The allowable ratio of apprentices to journeymen on the job site in any craft classification shall not be greater than the ratio permitted to the contractor as to the entire work force under the registered program. Any worker listed on a payroll at an apprentice wage rate, who is not registered or otherwise employed as stated above, shall be paid not less than the applicable wage rate on the wage determination for the classification of work actually performed. In addition, any apprentice performing work on the job site in excess of the ratio permitted under the registered program shall be paid not less than the applicable wage rate on the wage determination for the work actually performed. Where a contractor is performing construction on a project in a locality other than that in which its program is registered, the ratios and wage rates (expressed in percentages of the journeyman's hourly rate) specified in the contractor's or subcontractor's registered program shall be observed. Every apprentice must be paid at not less than the rate specified in the registered program for the apprentice's level of progress, expressed as a percentage of the journeymen hourly rate specified in the applicable wage determination. Apprentices shall be paid fringe benefits in accordance with the provisions of the apprenticeship program. If the apprenticeship program does not specify fringe benefits, apprentices must be paid the full amount of fringe benefits listed on the wage determination for the applicable classification. If the Administrator determines that a different practice prevails for the applicable apprentice classification, fringes shall be paid in accordance with that determination. In the event the Office of Apprenticeship Training, Employer and Labor Services, or a State Apprenticeship Agency recognized by the Office, withdraws approval of an apprenticeship program, the contractor will no longer be permitted to utilize apprentices at less than the applicable predetermined rate for the work performed until an acceptable program is approved.

(ii) Trainees. Except as provided in 29 CFR 5.16, trainees will not be permitted to work at less than the predetermined rate for the work performed unless they are employed pursuant to and individually registered in a program which has received prior approval, evidenced by formal certification by the U.S. Department of Labor, Employment and Training Administration. The ratio of trainees to journeymen on the job site shall not be greater than permitted under the plan approved by the Employment and Training Administration. Every trainee must be paid at not less than the rate specified in the approved program for the trainee's level of progress, expressed as a percentage of the journeyman hourly rate specified in the applicable wage determination. Trainees shall be paid fringe benefits in accordance with the provisions of the trainee program. If the trainee program does not mention fringe benefits, trainees shall be paid the full amount of fringe benefits listed on the wage determination unless the Administrator of the Wage and Hour Division determines that there is an apprenticeship program associated with the corresponding journeyman wage rate on the wage determination which provides for less than full fringe benefits for apprentices. Any employee listed on the payroll at a trainee rate who is not registered and participating in a training plan approved by the Employment and Training Administration shall be paid not less than the applicable wage rate on the wage determination for the classification of work actually performed. In addition, any trainee performing work on the job site in excess of the ratio permitted under the registered program shall be paid not less than the applicable wage rate on the wage determination for the work actually performed. In the event the Employment and Training Administration withdraws approval of a training program, the contractor will no longer be permitted to utilize trainees at less than the applicable predetermined rate for the work performed until an acceptable program is approved.

(iii) Equal employment opportunity. The utilization of apprentices, trainees and journeymen under this part shall be in conformity with the equal employment opportunity requirements of Executive Order 11246, as amended and 29 CFR part 30.

(5) Compliance with Copeland Act requirements. The contractor shall comply with the requirements of 29 CFR Part 3, which are incorporated by reference in this contract.

(6) Subcontracts. The contractor or subcontractor shall insert in any subcontracts the clauses contained in 29 CFR 5.5(a)(1) through (10) and such other clauses as the EPA may by appropriate instructions require, and also a clause requiring the subcontractors to include these clauses in any lower tier subcontracts. The prime contractor shall be responsible for the compliance by any subcontractor or lower tier subcontractor with all the contract clauses in this term and condition.

(7) Contract termination: debarment. A breach of the contract clauses in 29 CFR 5.5 may be grounds for termination of the contract, and for debarment as a contractor and a subcontractor as provided in 29 CFR 5.12.

(8) Compliance with Davis-Bacon and Related Act requirements. All rulings and interpretations of the Davis-Bacon and Related Acts contained in 29 CFR parts 1, 3, and 5 are herein incorporated by reference in this contract.

(9) Disputes concerning labor standards. Disputes arising out of the labor standards provisions of this contract shall not be subject to the general disputes clause of this contract. Such disputes shall be resolved in accordance with the procedures of the Department of Labor set forth in 29 CFR parts 5, 6, and 7. Disputes within the meaning of this clause include disputes between the contractor (or any of its subcontractors), ***the RLF Recipient, borrower or subrecipient and EPA***, the U.S. Department of Labor, or the employees or their representatives.

(10) Certification of eligibility.

(i) By entering into this contract, the contractor certifies that neither it (nor he or she) nor any person or firm who has an interest in the contractor's firm is a person or firm ineligible to be awarded Government contracts by virtue of section 3(a) of the Davis-Bacon Act or 29 CFR 5.12(a)(1).

(ii) No part of this contract shall be subcontracted to any person or firm ineligible for award of a Government contract by virtue of section 3(a) of the Davis-Bacon Act or 29 CFR 5.12(a)(1).

(iii) The penalty for making false statements is prescribed in the U.S. Criminal Code, 18 U.S.C. 1001.

4. Contract Provisions for Contracts in Excess of $100,000

(a) Contract Work Hours and Safety Standards Act. ***The RLF Recipient shall ensure that subrecipients and borrowers*** insert the following clauses set forth in paragraphs (a)(1), (2), (3), and (4) of this section in full in any contract in an amount in excess of $100,000 and subject to the overtime provisions of the Contract Work Hours and Safety Standards Act. These clauses shall be inserted in addition to the clauses required by Item 3, above or 29 CFF 4.6. As used in this paragraph, the terms laborers and mechanics include watchmen and guards.

(1) Overtime requirements. No contractor or subcontractor contracting for any part of the contract work which may require or involve the employment of laborers or mechanics shall require or permit any such laborer or mechanic in any workweek in which he or she is employed on such work to work in excess of forty hours in such workweek unless such laborer or mechanic receives compensation at a rate not less than one and one-half times the basic rate of pay for all hours worked in excess of forty hours in such workweek.

(2) Violation; liability for unpaid wages; liquidated damages. In the event of any violation of the clause set forth in paragraph (a) (1) of this section the contractor and any subcontractor responsible therefor shall be liable for the unpaid wages. In addition, such contractor and subcontractor shall be liable to the United States (in the case of work done under contract for the District of Columbia or a territory, to such District or to such territory), for liquidated damages. Such liquidated damages shall be computed with respect to each individual laborer or mechanic, including watchmen and guards, employed in violation of the clause set forth in paragraph (a) (1) of this section, in the sum of $10 for each calendar day on which such individual was required or permitted to work in excess of the standard workweek of forty hours without payment of the overtime wages required by the clause set forth in paragraph (a) (1) of this section.

(3) Withholding for unpaid wages and liquidated damages. The RLF Recipient shall upon written request from the Award Official or an authorized representative of the Department of Labor withhold or cause to be withheld by the borrower or subrecipient from any moneys payable on account of work performed by the contractor or subcontractor under any such contract or any other Federal contract with the same prime contractor, or any other federally-assisted contract subject to the Contract Work Hours and Safety Standards Act, which is held by the same prime contractor, such sums as may be determined to be necessary to satisfy any liabilities of such contractor or subcontractor for unpaid wages and liquidated damages as provided in the clause set forth in paragraph (a)(2) of this section.

(4) Subcontracts. The contractor or subcontractor shall insert in any subcontracts the clauses set forth in paragraph (a) (1) through (4) of this section and also a clause requiring the subcontractors to include these clauses in any lower tier subcontracts. The prime contractor shall be responsible for compliance by any subcontractor or lower tier subcontractor with the clauses set forth in paragraphs (a)(1) through (4) of this section.

(b) In addition to the clauses contained in Item 3, above, in any contract subject only to the Contract Work Hours and Safety Standards Act and not to any of the other statutes cited in 29 CFR 5.1, the RLF Recipient shall insert a clause requiring that the contractor or subcontractor shall maintain payrolls and basic payroll records during the course of the work and shall preserve them for a period of three years from the completion of the contract for all laborers and mechanics, including guards and watchmen, working on the contract. Such records shall contain the name and address of each such employee, social security number, correct classifications, hourly rates of wages paid, daily and weekly number of hours worked, deductions made, and actual wages paid. Further, the RLF Recipient shall insert in any such contract a clause providing that the records to be maintained under this paragraph shall be made available by the contractor or subcontractor for inspection, copying, or transcription by authorized representatives of the (write the name of agency) and the Department of Labor, and the contractor or subcontractor will permit such representatives to interview employees during working hours on the job.

5. Compliance Verification

Note: RLF Recipients may require that borrowers or subrecipients verify that contractors and subcontractors comply with DB provisions or conduct compliance verification itself. RLF Recipients must ensure that borrowers and subrecipients understand the compliance verification requirements and can interpret prevailing wage determinations properly before placing the responsibility for compliance verification on borrowers or subrecipients. Moreover, the RLF Recipient remains accountable to EPA for ensuring that the borrowers' and subrecipients' contractors and subcontractors comply with DB.

(a) The RLF Recipient periodically interview, or require that borrowers or subrecipients interview, a sufficient number of employees entitled to DB prevailing wages (covered employees) to verify that contractors or subcontractors are paying the appropriate wage rates. As provided in 29 CFR 5.6(a) (6), all interviews must be conducted in confidence. The RLF

Recipient must use Standard Form 1445 or equivalent documentation to memorialize the interviews. Copies of the SF 1445 are available from EPA on request.

(b) The RLF Recipient shall establish and follow, or ensure that borrowers or subrecipients establish and follow an interview schedule based on its assessment of the risks of noncompliance with DB posed by contractors or subcontractors and the duration of the contract or subcontract. At a minimum, the RLF Recipient, or the borrower or subrecipient, must conduct interviews with a representative group of covered employees within two weeks of each contractor or subcontractor's submission of its initial weekly payroll data and two weeks prior to the estimated completion date for the contract or subcontract. RLF Recipients, or borrowers or subrecipients, must conduct more frequent interviews if the initial interviews or other information indicates that there is a risk that the contractor or subcontractor is not complying with DB. RLF Recipients shall immediately conduct necessary interviews in response to an alleged violation of the prevailing wage requirements that it uncovers itself or that is reported to it by a borrower or subrecipients. All interviews shall be conducted in confidence.

(c) The RLF Recipient shall conduct, or require that borrowers or subrecipients periodically conduct spot checks of a representative sample of weekly payroll data to verify that contractors or subcontractors are paying the appropriate wage rates. The RLF Recipient shall establish and follow or ensure that borrowers or subrecipients follow a spot check schedule based on an assessment of the risks of noncompliance with DB posed by contractors or subcontractors and the duration of the contract or subcontract. At a minimum, the RLF Recipient must spot check, or require that borrowers or subrecipients spot check, payroll data within two weeks of each contractor or subcontractor's submission of its initial payroll data and two weeks prior to the completion date of the contract or subcontract. RLF Recipients must conduct, or require that borrowers or subrecipients conduct, more frequent spot checks if the initial spot check or other information indicates that there is a risk that the contractor or subcontractor is not complying with DB. In addition, during the examinations the RLF Recipient shall verify, or require that borrower or subrecipients verify, evidence of fringe benefit plans and payments there under by contractors and subcontractors who claim credit for fringe benefit contributions.

(d) The RLF Recipient shall periodically review, or require that borrowers or subrecipients periodically review, contractors and subcontractors use of apprentices and trainees to verify registration and certification with respect to apprenticeship and training programs approved by either the U.S Department of Labor or a state, as appropriate, and that contractors and subcontractors are not using disproportionate numbers of, laborers, trainees and apprentices. These reviews shall be conducted in accordance with the schedules for spot checks and interviews described in Item 5(b) and (c) above.

(e) RLF Recipients must immediately report, or require that borrowers or subrecipients immediately report, potential violations of the DB prevailing wage requirements to the EPA DB contact listed above and to the appropriate DOL Wage and Hour District Office listed at https://www.dol.gov/whd/america2.htm.

U.S. Department of Labor
Wage and Hour Division

PAYROLL

(For Contractor's Optional Use; See Instructions at www.dol.gov/whd/forms/wh347instr.htm)

Persons are not required to respond to the collection of information unless it displays a currently valid OMB control number.

U.S. Wage and Hour Division

Rev. Dec. 2008

NAME OF CONTRACTOR OR SUBCONTRACTOR	ADDRESS	OMB No.: 1235-0008 Expires: 01/31/2015

PAYROLL NO.	FOR WEEK ENDING	PROJECT AND LOCATION	PROJECT OR CONTRACT NO.

(1) NAME AND INDIVIDUAL IDENTIFYING NUMBER (e.g., LAST FOUR DIGITS OF SOCIAL SECURITY NUMBER) OF WORKER	(2) NO. OF WITHHOLDING EXEMPTIONS	(3) WORK CLASSIFICATION	OT. OR ST.	(4) DAY AND DATE / HOURS WORKED EACH DAY							(5) TOTAL HOURS	(6) RATE OF PAY	(7) GROSS AMOUNT EARNED	(8) DEDUCTIONS FICA	WITH-HOLDING TAX			OTHER	TOTAL DEDUCTIONS	(9) NET WAGES PAID FOR WEEK
			O																	
			S																	
			O																	
			S																	
			O																	
			S																	
			O																	
			S																	
			O																	
			S																	
			O																	
			S																	
			O																	
			S																	
			O																	
			S																	

While completion of Form WH-347 is optional, it is mandatory for covered contractors and subcontractors performing work on Federally financed or assisted construction contracts to respond to the information collection contained in 29 C.F.R. §§ 3.3, 5.5(a). The Copeland Act (40 U.S.C. § 3145) contractors and subcontractors performing work on Federally financed or assisted construction contracts to "furnish weekly a statement with respect to the wages paid each employee during the preceding week." U.S. Department of Labor (DOL) regulations at 29 C.F.R. § 5.5(a)(3)(ii) require contractors to submit weekly a copy of all payrolls to the Federal agency contracting for or financing the construction project, accompanied by a signed "Statement of Compliance" indicating that the payrolls are correct and complete and that each laborer or mechanic has been paid not less than the proper Davis-Bacon prevailing wage rate for the work performed. DOL and federal contracting agencies receiving this information review the information to determine that employees have received legally required wages and fringe benefits.

Public Burden Statement

We estimate that is will take an average of 55 minutes to complete this collection, including time for reviewing instructions, searching existing data sources, gathering and maintaining the data needed, and completing and reviewing the collection of information. If you have any comments regarding these estimates or any other aspect of this collection, including suggestions for reducing this burden, send them to the Administrator, Wage and Hour Division, U.S. Department of Labor, Room S3502, 200 Constitution Avenue, N.W. Washington, D.C. 20210

(over)

Date _____

I, _____ _____
(Name of Signatory Party) (Title)

do hereby state:

(1) That I pay or supervise the payment of the persons employed by

_____ on the
(Contractor or Subcontractor)

_____; that during the payroll period commencing on the
(Building or Work)

_____ day of _____, _____, and ending the _____ day of _____, _____,

all persons employed on said project have been paid the full weekly wages earned, that no rebates have been or will be made either directly or indirectly to or on behalf of said

_____ from the full
(Contractor or Subcontractor)

weekly wages earned by any person and that no deductions have been made either directly or indirectly from the full wages earned by any person, other than permissible deductions as defined in Regulations, Part 3 (29 C.F.R. Subtitle A), issued by the Secretary of Labor under the Copeland Act, as amended (48 Stat. 948, 63 Start. 108, 72 Stat. 967; 76 Stat. 357; 40 U.S.C. § 3145), and described below:

_____

_____

_____

_____

(2) That any payrolls otherwise under this contract required to be submitted for the above period are correct and complete; that the wage rates for laborers or mechanics contained therein are not less than the applicable wage rates contained in any wage determination incorporated into the contract; that the classifications set forth therein for each laborer or mechanic conform with the work he performed.

(3) That any apprentices employed in the above period are duly registered in a bona fide apprenticeship program registered with a State apprenticeship agency recognized by the Bureau of Apprenticeship and Training, United States Department of Labor, or if no such recognized agency exists in a State, are registered with the Bureau of Apprenticeship and Training, United States Department of Labor.

(4) That:

(a) WHERE FRINGE BENEFITS ARE PAID TO APPROVED PLANS, FUNDS, OR PROGRAMS

☐ – in addition to the basic hourly wage rates paid to each laborer or mechanic listed in the above referenced payroll, payments of fringe benefits as listed in the contract have been or will be made to appropriate programs for the benefit of such employees, except as noted in section 4(c) below.

(b) WHERE FRINGE BENEFITS ARE PAID IN CASH

☐ – Each laborer or mechanic listed in the above referenced payroll has been paid, as indicated on the payroll, an amount not less than the sum of the applicable basic hourly wage rate plus the amount of the required fringe benefits as listed in the contract, except as noted in section 4(c) below.

(c) EXCEPTIONS

EXCEPTION (CRAFT)	EXPLANATION

REMARKS:

NAME AND TITLE	SIGNATURE

THE WILLFUL FALSIFICATION OF ANY OF THE ABOVE STATEMENTS MAY SUBJECT THE CONTRACTOR OR SUBCONTRACTOR TO CIVIL OR CRIMINAL PROSECUTION. SEE SECTION 1001 OF TITLE 18 AND SECTION 231 OF TITLE 31 OF THE UNITED STATES CODE.

APPENDIX E

EPA, American Iron and Steel (AIS) Requirements

INDEX

- EPA, American Iron and Steel Requirements - Special Notes
- USEPA Memorandum (April 7, 2017)
- American Iron & Steel Requirement Guidance
- Questions and Answers Part 1: Valves & Hydrants
- Questions and Answers Part 2: Products, Projects, & Process
- Questions and Answers Part 3: Plans and specifications dates, Refinancing and Coatings
- Exhibit H - American Iron & Steel Certfication "Certification by the Borrower of Compliance with the American Iron & Steel Requirements.."

APPENDIX E
EPA AMERICAN IRON AND STEEL (AIS) REQUIREMENTS
SPECIAL NOTES

1.1 This contract is subject to the application of American Iron and Steel Requirements to the Fiscal Year 2018 and 2019 Drinking Water State Revolving Fund Assistance Agreements for projects associated with the construction, alteration, maintenance, or repair of public water systems.

1.2 Reference is made to USEPA Memorandum, dated April 7, 2017, which has been provided within this appendix of the Contract Specifications.

UNITED STATES ENVIRONMENTAL PROTECTION AGENCY
WASHINGTON, D.C. 20460

APR 7 2017

OFFICE OF WATER

MEMORANDUM

SUBJECT: Effective Until April 28, 2017. Application of American Iron and Steel Requirements for Drinking Water State Revolving Fund Projects for Fiscal Year 2017.

FROM: Anita Maria Thompkins, Director
Drinking Water Protection Division

TO: Water Management Division Directors
Regions I-X

On December 10, 2016, the President signed Public Law 114-254, the "Further Continuing and Security Assistance Appropriations Act, 2017" (hereinafter referred to as the Continuing Resolution or CR) which provides fiscal year (FY) 2017 appropriations for continuing projects and activities of the Federal Government through April 28, 2017. This law extends funding for the Drinking Water State Revolving Fund for the time period of October 1, 2016 through April 28, 2017, with the same conditions that were made applicable by the language of the FY 2016 appropriation act, including the requirement for the use of American Iron and Steel (AIS) products in projects receiving financial assistance from the DWSRF.

We have received inquiries about the impact of recent legislation on the AIS provisions. On December 16, 2016, the President signed P.L. 114-322, the "Water Infrastructure Improvements for the Nation (WIIN) Act," which also included the DWSRF AIS requirement for FY 2017. However, the AIS language in the WIIN Act included an exemption for projects for which the engineering plans and specifications were approved by the State prior to the date of enactment. This exemption language was not included in the CR or the FY 2016 appropriation. The Government Accountability Office has asserted that continuing resolutions are meant to maintain the status quo. In addition, when two laws potentially conflict, the Supreme Court has strived to harmonize the laws to give maximum effect to both. Lastly, there is a presumption that Congress has not repealed a provision unless an intent to repeal is clear and manifest. Applying those principles here, there is no clear and manifest indication in the WIIN Act that Congress meant to repeal the provisions of the FY 2016 appropriation act (and subsequent CR). By its own terms, the WIIN Act exemption language states that the DWSRF AIS requirement imposed by "this paragraph" (*i.e.*, the Safe Drinking Water Act as amended by the WIIN Act) does not apply in the case of state-approved engineering plans and specifications. That language does not speak to DWSRF AIS requirements imposed by other laws. Therefore, the language of the FY 2016 appropriation act would continue to apply.

Therefore, all assistance agreements starting October 1, 2016 through April 28, 2017 must include the AIS requirement regardless of when the engineering plans and specifications were approved. If there is an additional CR, or if the Environmental Protection Agency (EPA) receives an FY 2017 appropriation,

the EPA will have to review that language to determine what, if any, effect might be given to the WIIN language.

If you have any questions, please contact Kiri Anderer (202-564-3134 or anderer.kirsten@epa.gov).

cc: Ronald Bergman, Associate Director, Drinking Water Protection Division
Felecia Fort, Associate Branch Chief, Infrastructure Branch, Drinking Water Protection Division
Kirsten Anderer, Environmental Engineer, DWSRF
Jorge Medrano, Environmental Engineer, DWSRF

UNITED STATES ENVIRONMENTAL PROTECTION AGENCY
WASHINGTON, D.C. 20460

MAR 20 2014

OFFICE OF WATER

MEMORANDUM

SUBJECT: Implementation of American Iron and Steel provisions of P.L. 113-76, Consolidated Appropriations Act, 2014

FROM: For Andrew D. Sawyers, Director
Office of Wastewater Management (4201M)

Peter C. Grevatt, Director
Office of Ground Water and Drinking Water (4601M)

TO: Water Management Division Directors
Regions I - X

P.L. 113-76, Consolidated Appropriations Act, 2014 (Act), includes an "American Iron and Steel (AIS)" requirement in section 436 that requires Clean Water State Revolving Loan Fund (CWSRF) and Drinking Water State Revolving Loan Fund (DWSRF) assistance recipients to use iron and steel products that are produced in the United States for projects for the construction, alteration, maintenance, or repair of a public water system or treatment works if the project is funded through an assistance agreement executed beginning January 17, 2014 (enactment of the Act), through the end of Federal Fiscal Year 2014.

Section 436 also sets forth certain circumstances under which EPA may waive the AIS requirement. Furthermore, the Act specifically exempts projects where engineering plans and specifications were approved by a State agency prior to January 17, 2014.

The approach described below explains how EPA will implement the AIS requirement. The first section is in the form of questions and answers that address the types of projects that must comply with the AIS requirement, the types of products covered by the AIS requirement, and compliance. The second section is a step-by-step process for requesting waivers and the circumstances under which waivers may be granted.

Implementation

The Act states:

Sec. 436. (a)(1) None of the funds made available by a State water pollution control revolving fund as authorized by title VI of the Federal Water Pollution Control Act (33 U.S.C. 1381 et seq.) or made available by a drinking water treatment revolving loan fund as authorized by section 1452 of the Safe Drinking Water Act (42 U.S.C. 300j–12) shall be used for a project for the construction, alteration, maintenance, or repair of a public water system or treatment works unless all of the iron and steel products used in the project are produced in the United States.

(2) In this section, the term ''iron and steel products'' means the following products made primarily of iron or steel: lined or unlined pipes and fittings, manhole covers and other municipal castings, hydrants, tanks, flanges, pipe clamps and restraints, valves, structural steel, reinforced precast concrete, and construction materials.

(b) Subsection (a) shall not apply in any case or category of cases in which the Administrator of the Environmental Protection Agency (in this section referred to as the ''Administrator'') finds that—

(1) applying subsection (a) would be inconsistent with the public interest;

(2) iron and steel products are not produced in the United States in sufficient and reasonably available quantities and of a satisfactory quality; or

(3) inclusion of iron and steel products produced in the United States will increase the cost of the overall project by more than 25 percent.

(c) If the Administrator receives a request for a waiver under this section, the Administrator shall make available to the public on an informal basis a copy of the request and information available to the Administrator concerning the request, and shall allow for informal public input on the request for at least 15 days prior to making a finding based on the request. The Administrator shall make the request and accompanying information available by electronic means, including on the official public Internet Web site of the Environmental Protection Agency.

(d) This section shall be applied in a manner consistent with United States obligations under international agreements.

(e) The Administrator may retain up to 0.25 percent of the funds appropriated in this Act for the Clean and Drinking Water State Revolving Funds for carrying out

the provisions described in subsection (a)(1) for management and oversight of the requirements of this section.

(f) This section does not apply with respect to a project if a State agency approves the engineering plans and specifications for the project, in that agency's capacity to approve such plans and specifications prior to a project requesting bids, prior to the date of the enactment of this Act.

The following questions and answers provide guidance for implementing and complying with the AIS requirements:

Project Coverage

1) What classes of projects are covered by the AIS requirement?

All treatment works projects funded by a CWSRF assistance agreement, and all public water system projects funded by a DWSRF assistance agreement, from the date of enactment through the end of Federal Fiscal Year 2014, are covered. The AIS requirements apply to the entirety of the project, no matter when construction begins or ends. Additionally, the AIS requirements apply to all parts of the project, no matter the source of funding.

2) Does the AIS requirement apply to nonpoint source projects or national estuary projects?

No. Congress did not include an AIS requirement for nonpoint source and national estuary projects unless the project can also be classified as a 'treatment works' as defined by section 212 of the Clean Water Act.

3) Are any projects for the construction, alteration, maintenance, or repair of a public water system or treatment works excluded from the AIS requirement?

Any project, whether a treatment works project or a public water system project, for which engineering plans and specifications were approved by the responsible state agency prior to January 17, 2014, is excluded from the AIS requirements.

4) What if the project does not have approved engineering plans and specifications but has signed an assistance agreement with a CWSRF or DWSRF program prior to January 17, 2014?

The AIS requirements do not apply to any project for which an assistance agreement was signed prior to January 17, 2014.

5) What if the project does not have approved engineering plans and specifications, but bids were advertised prior to January 17, 2014 and an assistance agreement was signed after January 17, 2014?

If the project does not require approved engineering plans and specifications, the bid advertisement date will count in lieu of the approval date for purposes of the exemption in section 436(f).

6) What if the assistance agreement that was signed prior to January 17, 2014, only funded a part of the overall project, where the remainder of the project will be funded later with another SRF loan?

If the original assistance agreement funded any construction of the project, the date of the original assistance agreement counts for purposes of the exemption. If the original assistance agreement was only for planning and design, the date of that assistance agreement will count for purposes of the exemption only if there is a written commitment or expectation on the part of the assistance recipient to fund the remainder of the project with SRF funds.

7) What if the assistance agreement that was signed prior to January 17, 2014, funded the first phase of a multi-phase project, where the remaining phases will be funded by SRF assistance in the future?

In such a case, the phases of the project will be considered a single project if all construction necessary to complete the building or work, regardless of the number of contracts or assistance agreements involved, are closely related in purpose, time and place. However, there are many situations in which major construction activities are clearly undertaken in phases that are distinct in purpose, time, or place. In the case of distinct phases, projects with engineering plans and specifications approval or assistance agreements signed prior to January 17, 2014 would be excluded from AIS requirements while those approved/signed on January 17, 2014, or later would be covered by the AIS requirements.

8) What if a project has split funding from a non-SRF source?

Many States intend to fund projects with "split" funding, from the SRF program and from State or other programs. Based on the Act language in section 436, which requires that American iron and steel products be used in any project for the construction, alteration, maintenance, or repair of a public water system or treatment works receiving SRF funding between and including January 17, 2014 and September 30, 2014, any project that is funded in whole or in part with such funds must comply with the AIS requirement. A "project" consists of all construction necessary to complete the building or work regardless of the number of contracts or assistance agreements involved so long as all contracts and assistance agreements awarded are closely related in purpose, time and place. This precludes the intentional splitting of SRF projects into separate and smaller contracts or assistance agreements to avoid AIS coverage on some portion of a larger

project, particularly where the activities are integrally and proximately related to the whole. However, there are many situations in which major construction activities are clearly undertaken in separate phases that are distinct in purpose, time, or place, in which case, separate contracts or assistance agreement for SRF and State or other funding would carry separate requirements.

9) What about refinancing?

If a project began construction, financed from a non-SRF source, prior to January 17, 2014, but is refinanced through an SRF assistance agreement executed on or after January 17, 2014 and prior to October 1, 2014, AIS requirements will apply to all construction that occurs on or after January 17, 2014, through completion of construction, unless, as is likely, engineering plans and specifications were approved by a responsible state agency prior to January 17, 2014. There is no retroactive application of the AIS requirements where a refinancing occurs for a project that has completed construction prior to January 17, 2014.

10) Do the AIS requirements apply to any other EPA programs, besides the SRF program, such as the Tribal Set-aside grants or grants to the Territories and DC?

No, the AIS requirement only applies to funds made available by a State water pollution control revolving fund as authorized by title VI of the Federal Water Pollution Control Act (33 U.S.C. 1381 et seq.) or made available by a drinking water treatment revolving loan fund as authorized by section 1452 of the Safe Drinking Water Act (42 U.S.C. 300j–12)

<u>Covered Iron and Steel Products</u>

11) What is an iron or steel product?

For purposes of the CWSRF and DWSRF projects that must comply with the AIS requirement, an iron or steel product is one of the following made primarily of iron or steel that is permanently incorporated into the public water system or treatment works:

Lined or unlined pipes or fittings;
Manhole Covers;
Municipal Castings (defined in more detail below);
Hydrants;
Tanks;
Flanges;
Pipe clamps and restraints;
Valves;
Structural steel (defined in more detail below);
Reinforced precast concrete; and
Construction materials (defined in more detail below).

12) What does the term 'primarily iron or steel' mean?

'Primarily iron or steel' places constraints on the list of products above. For one of the listed products to be considered subject to the AIS requirements, it must be made of greater than 50% iron or steel, measured by cost. The cost should be based on the material costs.

13) Can you provide an example of how to perform a cost determination?

For example, the iron portion of a fire hydrant would likely be the bonnet, body and shoe, and the cost then would include the pouring and casting to create those components. The other material costs would include non-iron and steel internal workings of the fire hydrant (i.e., stem, coupling, valve, seals, etc). However, the assembly of the internal workings into the hydrant body would not be included in this cost calculation. If one of the listed products is not made primarily of iron or steel, United States (US) provenance is not required. An exception to this definition is reinforced precast concrete, which is addressed in a later question.

14) If a product is composed of more than 50% iron or steel, but is not listed in the above list of items, must the item be produced in the US? Alternatively, must the iron or steel in such a product be produced in the US?

The answer to both question is no. Only items on the above list must be produced in the US. Additionally, the iron or steel in a non-listed item can be sourced from outside the US.

15) What is the definition of steel?

Steel means an alloy that includes at least 50 percent iron, between .02 and 2 percent carbon, and may include other elements. Metallic elements such as chromium, nickel, molybdenum, manganese, and silicon may be added during the melting of steel for the purpose of enhancing properties such as corrosion resistance, hardness, or strength. The definition of steel covers carbon steel, alloy steel, stainless steel, tool steel and other specialty steels.

16) What does 'produced in the United States' mean?

Production in the United States of the iron or steel products used in the project requires that all manufacturing processes, including application of coatings, must take place in the United States, with the exception of metallurgical processes involving refinement of steel additives. All manufacturing processes includes processes such as melting, refining, forming, rolling, drawing, finishing, fabricating and coating. Further, if a domestic iron and steel product is taken out of the US for any part of the manufacturing process, it becomes foreign source material. However, raw materials such as iron ore, limestone and iron and steel scrap are not covered by the AIS requirement, and the

material(s), if any, being applied as a coating are similarly not covered. Non-iron or steel components of an iron and steel product may come from non-US sources. For example, for products such as valves and hydrants, the individual non-iron and steel components do not have to be of domestic origin.

17) Are the raw materials used in the production of iron or steel required to come from US sources?

No. Raw materials, such as iron ore, limestone, scrap iron, and scrap steel, can come from non-US sources.

18) If an above listed item is primarily made of iron or steel, but is only at the construction site temporarily, must such an item be produced in the US?

No. Only the above listed products made primarily of iron or steel, permanently incorporated into the project must be produced in the US. For example trench boxes, scaffolding or equipment, which are removed from the project site upon completion of the project, are not required to be made of U.S. Iron or Steel.

19) What is the definition of 'municipal castings'?

Municipal castings are cast iron or steel infrastructure products that are melted and cast. They typically provide access, protection, or housing for components incorporated into utility owned drinking water, storm water, wastewater, and surface infrastructure. They are typically made of grey or ductile iron, or steel. Examples of municipal castings are:

Access Hatches;
Ballast Screen;
Benches (Iron or Steel);
Bollards;
Cast Bases;
Cast Iron Hinged Hatches, Square and Rectangular;
Cast Iron Riser Rings;
Catch Basin Inlet;
Cleanout/Monument Boxes;
Construction Covers and Frames;
Curb and Corner Guards;
Curb Openings;
Detectable Warning Plates;
Downspout Shoes (Boot, Inlet);
Drainage Grates, Frames and Curb Inlets;
Inlets;
Junction Boxes;
Lampposts;
Manhole Covers, Rings and Frames, Risers;

Meter Boxes;
Service Boxes;
Steel Hinged Hatches, Square and Rectangular;
Steel Riser Rings;
Trash receptacles;
Tree Grates;
Tree Guards;
Trench Grates; and
Valve Boxes, Covers and Risers.

20) What is 'structural steel'?

Structural steel is rolled flanged shapes, having at least one dimension of their cross-section three inches or greater, which are used in the construction of bridges, buildings, ships, railroad rolling stock, and for numerous other constructional purposes. Such shapes are designated as wide-flange shapes, standard I-beams, channels, angles, tees and zees. Other shapes include H-piles, sheet piling, tie plates, cross ties, and those for other special purposes.

21) What is a 'construction material' for purposes of the AIS requirement?

Construction materials are those articles, materials, or supplies made primarily of iron and steel, that are permanently incorporated into the project, not including mechanical and/or electrical components, equipment and systems. Some of these products may overlap with what is also considered "structural steel". This includes, but is not limited to, the following products: wire rod, bar, angles, concrete reinforcing bar, wire, wire cloth, wire rope and cables, tubing, framing, joists, trusses, fasteners (i.e., nuts and bolts), welding rods, decking, grating, railings, stairs, access ramps, fire escapes, ladders, wall panels, dome structures, roofing, ductwork, surface drains, cable hanging systems, manhole steps, fencing and fence tubing, guardrails, doors, and stationary screens.

22) What is not considered a 'construction material' for purposes of the AIS requirement?

Mechanical and electrical components, equipment and systems are not considered construction materials. Mechanical equipment is typically that which has motorized parts and/or is powered by a motor. Electrical equipment is typically any machine powered by electricity and includes components that are part of the electrical distribution system.

The following examples (including their appurtenances necessary for their intended use and operation) are NOT considered construction materials: pumps, motors, gear reducers, drives (including variable frequency drives (VFDs)), electric/pneumatic/manual accessories used to operate valves (such as electric valve actuators), mixers, gates, motorized screens (such as traveling screens), blowers/aeration equipment, compressors, meters, sensors, controls and switches, supervisory control and

data acquisition (SCADA), membrane bioreactor systems, membrane filtration systems, filters, clarifiers and clarifier mechanisms, rakes, grinders, disinfection systems, presses (including belt presses), conveyors, cranes, HVAC (excluding ductwork), water heaters, heat exchangers, generators, cabinetry and housings (such as electrical boxes/enclosures), lighting fixtures, electrical conduit, emergency life systems, metal office furniture, shelving, laboratory equipment, analytical instrumentation, and dewatering equipment.

23) If the iron or steel is produced in the US, may other steps in the manufacturing process take place outside of the US, such as assembly?

No. Production in the US of the iron or steel used in a listed product requires that all manufacturing processes must take place in the United States, except metallurgical processes involving refinement of steel additives.

24) What processes must occur in the US to be compliant with the AIS requirement for reinforced precast concrete?

While reinforced precast concrete may not be at least 50% iron or steel, in this particular case, the reinforcing bar and wire must be produced in the US and meet the same standards as for any other iron or steel product. Additionally, the casting of the concrete product must take place in the US. The cement and other raw materials used in concrete production are not required to be of domestic origin.

If the reinforced concrete is cast at the construction site, the reinforcing bar and wire are considered to be a construction material and must be produced in the US.

Compliance

25) How should an assistance recipient document compliance with the AIS requirement?

In order to ensure compliance with the AIS requirement, specific AIS contract language must be included in each contract, starting with the assistance agreement, all the way down to the purchase agreements. Sample language for assistance agreements and contracts can be found in Appendix 3 and 4.

EPA recommends the use of a step certification process, similar to one used by the Federal Highway Administration. The step certification process is a method to ensure that producers adhere to the AIS requirement and assistance recipients can verify that products comply with the AIS requirement. The process also establishes accountability and better enables States to take enforcement actions against violators.

Step certification creates a paper trail which documents the location of the manufacturing process involved with the production of steel and iron materials. A step certification is a process under which each handler (supplier, fabricator, manufacturer,

processor, etc) of the iron and steel products certifies that their step in the process was domestically performed. Each time a step in the manufacturing process takes place, the manufacturer delivers its work along with a certification of its origin. A certification can be quite simple. Typically, it includes the name of the manufacturer, the location of the manufacturing facility where the product or process took place (not its headquarters), a description of the product or item being delivered, and a signature by a manufacturer's responsible party. Attached, as Appendix 5, are sample certifications. These certifications should be collected and maintained by assistance recipients.

Alternatively, the final manufacturer that delivers the iron or steel product to the worksite, vendor, or contractor, may provide a certification asserting that all manufacturing processes occurred in the US. While this type of certification may be acceptable, it may not provide the same degree of assurance. Additional documentation may be needed if the certification is lacking important information. Step certification is the best practice.

26) How should a State ensure assistance recipients are complying with the AIS requirement?

In order to ensure compliance with the AIS requirement, States SRF programs must include specific AIS contract language in the assistance agreement. Sample language for assistance agreements can be found in Appendix 3.

States should also, as a best practice, conduct site visits of projects during construction and review documentation demonstrating proof of compliance which the assistance recipient has gathered.

27) What happens if a State or EPA finds a non-compliant iron and/or steel product permanently incorporated in the project?

If a potentially non-compliant product is identified, the State should notify the assistance recipient of the apparent unauthorized use of the non-domestic component, including a proposed corrective action, and should be given the opportunity to reply. If unauthorized use is confirmed, the State can take one or more of the following actions: request a waiver where appropriate; require the removal of the non-domestic item; or withhold payment for all or part of the project. Only EPA can issue waivers to authorize the use of a non-domestic item. EPA may use remedies available to it under the Clean Water Act, the Safe Drinking Water Act, and 40 CFR part 31 grant regulations, in the event of a violation of a grant term and condition.

It is recommended that the State work collaboratively with EPA to determine the appropriate corrective action, especially in cases where the State is the one who identifies the item in noncompliance or there is a disagreement with the assistance recipient.

If fraud, waste, abuse, or any violation of the law is suspected, the Office of Inspector General (OIG) should be contacted immediately. The OIG can be reached at 1-

888-546-8740 or OIG_Hotline@epa.gov. More information can be found at this website: http://www.epa.gov/oig/hotline.htm.

28) How do international trade agreements affect the implementation of the AIS requirements?

The AIS provision applies in a manner consistent with United States obligations under international agreements. Typically, these obligations only apply to direct procurement by the entities that are signatories to such agreements. In general, SRF assistance recipients are not signatories to such agreements, so these agreements have no impact on this AIS provision. In the few instances where such an agreement applies to a municipality, that municipality is under the obligation to determine its applicability and requirements and document the actions taken to comply for the State.

Waiver Process

The statute permits EPA to issue waivers for a case or category of cases where EPA finds (1) that applying these requirements would be inconsistent with the public interest; (2) iron and steel products are not produced in the US in sufficient and reasonably available quantities and of a satisfactory quality; or (3) inclusion of iron and steel products produced in the US will increase the cost of the overall project by more than 25 percent.

In order to implement the AIS requirements, EPA has developed an approach to allow for effective and efficient implementation of the waiver process to allow projects to proceed in a timely manner. The framework described below will allow States, on behalf of the assistance recipients, to apply for waivers of the AIS requirement directly to EPA Headquarters. Only waiver requests received from states will be considered. Pursuant to the Act, EPA has the responsibility to make findings as to the issuance of waivers to the AIS requirements.

Definitions

The following terms are critical to the interpretation and implementation of the AIS requirements and apply to the process described in this memorandum:

Reasonably Available Quantity: The quantity of iron or steel products is available or will be available at the time needed and place needed, and in the proper form or specification as specified in the project plans and design.

Satisfactory Quality: The quality of iron or steel products, as specified in the project plans and designs.

Assistance Recipient: A borrower or grantee that receives funding from a State CWSRF or DWSRF program.

Step-By-Step Waiver Process

Application by Assistance Recipient

Each local entity that receives SRF water infrastructure financial assistance is required by section 436 of the Act to use American made iron and steel products in the construction of its project. However, the recipient may request a waiver. Until a waiver is granted by EPA, the AIS requirement stands, except as noted above with respect to municipalities covered by international agreements.

The waiver process begins with the SRF assistance recipient. In order to fulfill the AIS requirement, the assistance recipient must in good faith design the project (where applicable) and solicit bids for construction with American made iron and steel products. It is essential that the assistance recipient include the AIS terms in any request for proposals or solicitations for bids, and in all contracts (see Appendix 3 for sample construction contract language). The assistance recipient may receive a waiver at any point before, during, or after the bid process, if one or more of three conditions is met:

1. Applying the American Iron and Steel requirements of the Act would be inconsistent with the public interest;
2. Iron and steel products are not produced in the United States in sufficient and reasonably available quantities and of a satisfactory quality; or
3. Inclusion of iron and steel products produced in the United States will increase the cost of the overall project by more than 25 percent.

Proper and sufficient documentation must be provided by the assistance recipient. A checklist detailing the types of information required for a waiver to be processed is attached as Appendix 1.

Additionally, it is strongly encouraged that assistance recipients hold pre-bid conferences with potential bidders. A pre-bid conference can help to identify iron and steel products needed to complete the project as described in the plans and specifications that may not be available from domestic sources. It may also identify the need to seek a waiver prior to bid, and can help inform the recipient on compliance options.

In order to apply for a project waiver, the assistance recipient should email the request in the form of a Word document (.doc) to the State SRF program. It is strongly recommended that the State designate a single person for all AIS communications. The State SRF designee will review the application for the waiver and determine whether the necessary information has been included. Once the waiver application is complete, the State designee will forward the application to either of two email addresses. For CWSRF waiver requests, please send the application to: cwsrfwaiver@epa.gov. For DWSRF waiver requests, please send the application to: dwsrfwaiver@epa.gov.

Evaluation by EPA

After receiving an application for waiver of the AIS requirements, EPA Headquarters will publish the request on its website for 15 days and receive informal comment. EPA Headquarters will then use the checklist in Appendix 2 to determine whether the application properly and adequately documents and justifies the statutory basis cited for the waiver – that it is quantitatively and qualitatively sufficient – and to determine whether or not to grant the waiver.

In the event that EPA finds that adequate documentation and justification has been submitted, the Administrator may grant a waiver to the assistance recipient. EPA will notify the State designee that a waiver request has been approved or denied as soon as such a decision has been made. Granting such a waiver is a three-step process:

1. Posting – After receiving an application for a waiver, EPA is required to publish the application and all material submitted with the application on EPA's website for 15 days. During that period, the public will have the opportunity to review the request and provide informal comment to EPA. The website can be found at: http://water.epa.gov/grants_funding/aisrequirement.cfm

2. Evaluation – After receiving an application for waiver of the AIS requirements, EPA Headquarters will use the checklist in Appendix 2 to determine whether the application properly and adequately documents and justifies the statutory basis cited for the waiver – that it is quantitatively and qualitatively sufficient – and to determine whether or not to grant the waiver.

3. Signature of waiver approval by the Administrator or another agency official with delegated authority – As soon as the waiver is signed and dated, EPA will notify the State SRF program, and post the signed waiver on our website. The assistance recipient should keep a copy of the signed waiver in its project files.

Public Interest Waivers

EPA has the authority to issue public interest waivers. Evaluation of a public interest waiver request may be more complicated than that of other waiver requests so they may take more time than other waiver requests for a decision to be made. An example of a public interest waiver that might be issued could be for a community that has standardized on a particular type or manufacturer of a valve because of its performance to meet their specifications. Switching to an alternative valve may require staff to be trained on the new equipment and additional spare parts would need to be purchased and stocked, existing valves may need to be unnecessarily replaced, and portions of the system may need to be redesigned. Therefore, requiring the community to install an alternative valve would be inconsistent with public interest.

EPA also has the authority to issue a public interest waiver that covers categories of products that might apply to all projects.

EPA reserves the right to issue national waivers that may apply to particular classes of assistance recipients, particular classes of projects, or particular categories of iron or steel products. EPA may develop national or (US geographic) regional categorical waivers through the identification of similar circumstances in the detailed justifications presented to EPA in a waiver request or requests. EPA may issue a national waiver based on policy decisions regarding the public's interest or a determination that a particular item is not produced domestically in reasonably available quantities or of a sufficient quality. In such cases, EPA may determine it is necessary to issue a national waiver.

If you have any questions concerning the contents of this memorandum, you may contact us, or have your staff contact Jordan Dorfman, Attorney-Advisor, State Revolving Fund Branch, Municipal Support Division, at dorfman.jordan@epa.gov or (202) 564-0614 or Kiri Anderer, Environmental Engineer, Infrastructure Branch, Drinking Water Protection Division, at anderer.kirsten@epa.gov or (202) 564-3134.

Attachments

Appendix 1: Information Checklist for Waiver Request

The purpose of this checklist is to help ensure that all appropriate and necessary information is submitted to EPA. EPA recommends that States review this checklist carefully and provide all appropriate information to EPA. This checklist is for informational purposes only and does not need to be included as part of a waiver application.

Items	✓	Notes
General • Waiver request includes the following information: — Description of the foreign and domestic construction materials — Unit of measure — Quantity — Price — Time of delivery or availability — Location of the construction project — Name and address of the proposed supplier — A detailed justification for the use of foreign construction materials • Waiver request was submitted according to the instructions in the memorandum • Assistance recipient made a good faith effort to solicit bids for domestic iron and steel products, as demonstrated by language in requests for proposals, contracts, and communications with the prime contractor		
Cost Waiver Requests • Waiver request includes the following information: — Comparison of overall cost of project with domestic iron and steel products to overall cost of project with foreign iron and steel products — Relevant excerpts from the bid documents used by the contractors to complete the comparison — Supporting documentation indicating that the contractor made a reasonable survey of the market, such as a description of the process for identifying suppliers and a list of contacted suppliers		
Availability Waiver Requests • Waiver request includes the following supporting documentation necessary to demonstrate the availability, quantity, and/or quality of the materials for which the waiver is requested: — Supplier information or pricing information from a reasonable number of domestic suppliers indicating availability/delivery date for construction materials — Documentation of the assistance recipient's efforts to find available domestic sources, such as a description of the process for identifying suppliers and a list of contacted suppliers. — Project schedule — Relevant excerpts from project plans, specifications, and permits indicating the required quantity and quality of construction materials • Waiver request includes a statement from the prime contractor and/or supplier confirming the non-availability of the domestic construction materials for which the waiver is sought • Has the State received other waiver requests for the materials described in this waiver request, for comparable projects?		

Appendix 2: HQ Review Checklist for Waiver Request

Instructions: To be completed by EPA. Review all waiver requests using the questions in the checklist, and mark the appropriate box as Yes, No or N/A. Marks that fall inside the shaded boxes may be grounds for denying the waiver. If none of your review markings fall into a shaded box, the waiver is eligible for approval if it indicates that one or more of the following conditions applies to the domestic product for which the waiver is sought:

1. The iron and/or steel products are not produced in the United States in sufficient and reasonably available quantities and of a satisfactory quality.
2. The inclusion of iron and/or steel products produced in the United States will increase the cost of the overall project by more than 25 percent.

Review Items	Yes	No	N/A	Comments
Cost Waiver Requests • Does the waiver request include the following information? — Comparison of overall cost of project with domestic iron and steel products to overall cost of project with foreign iron and steel products				
— Relevant excerpts from the bid documents used by the contractors to complete the comparison				
— A sufficient number of bid documents or pricing information from domestic sources to constitute a reasonable survey of the market				
• Does the Total Domestic Project exceed the Total Foreign Project Cost by more than 25%?				
Availability Waiver Requests • Does the waiver request include supporting documentation sufficient to show the availability, quantity, and/or quality of the iron and/or steel product for which the waiver is requested? — Supplier information or other documentation indicating availability/delivery date for materials — Project schedule — Relevant excerpts from project plans, specifications, and permits indicating the required quantity and quality of materials				
• Does supporting documentation provide sufficient evidence that the contractors made a reasonable effort to locate domestic suppliers of materials, such as a description of the process for identifying suppliers and a list of contacted suppliers?				
• Based on the materials delivery/availability date indicated in the supporting documentation, will the materials be unavailable when they are needed according to the project schedule? (By item, list schedule date and domestic delivery quote date or other relevant information)				
• Is EPA aware of any other evidence indicating the non-availability of the materials for which the waiver is requested? Examples include: — Multiple waiver requests for the materials described in this waiver request, for comparable projects in the same State — Multiple waiver requests for the materials described in this waiver request, for comparable projects in other States — Correspondence with construction trade associations indicating the non-availability of the materials				
• Are the available domestic materials indicated in the bid documents of inadequate quality compared those required by the project plans, specifications, and/or permits?				

Appendix 3: Example Loan Agreement Language

ALL ASSISTANCE AGREEMENT MUST HAVE A CLAUSE REQUIRING COMPLIANCE WITH THE AIS REQUIREMENT. THIS IS AN EXAMPLE OF WHAT COULD BE INCLUDED IN SRF ASSISTANCE AGREEMENTS. EPA MAKES NO CLAIMS REGARDING THE LEGALITY OF THIS CLAUSE WITH RESPECT TO STATE LAW:

Comply with all federal requirements applicable to the Loan (including those imposed by the 2014 Appropriations Act and related SRF Policy Guidelines) which the Participant understands includes, among other, requirements that all of the iron and steel products used in the Project are to be produced in the United States ("American Iron and Steel Requirement") unless (i) the Participant has requested and obtained a waiver from the Agency pertaining to the Project or (ii) the Finance Authority has otherwise advised the Participant in writing that the American Iron and Steel Requirement is not applicable to the Project.

Comply with all record keeping and reporting requirements under the Clean Water Act/Safe Drinking Water Act, including any reports required by a Federal agency or the Finance Authority such as performance indicators of program deliverables, information on costs and project progress. The Participant understands that (i) each contract and subcontract related to the Project is subject to audit by appropriate federal and state entities and (ii) failure to comply with the Clean Water Act/Safe Drinking Water Act and this Agreement may be a default hereunder that results in a repayment of the Loan in advance of the maturity of the Bonds and/or other remedial actions.

Appendix 4: Sample Construction Contract Language

ALL CONTRACTS MUST HAVE A CLAUSE REQUIRING COMPLIANCE WITH THE AIS REQUIREMENT. THIS IS AN EXAMPLE OF WHAT COULD BE INCLUDED IN ALL CONTRACTS IN PROJECTS THAT USE SRF FUNDS. EPA MAKES NO CLAIMS REGARDING THE LEGALITY OF THIS CLAUSE WITH RESPECT TO STATE OR LOCAL LAW:

The Contractor acknowledges to and for the benefit of the City of _____ ("Purchaser") and the _____ (the "State") that it understands the goods and services under this Agreement are being funded with monies made available by the Clean Water State Revolving Fund and/or Drinking Water State Revolving Fund that have statutory requirements commonly known as "American Iron and Steel;" that requires all of the iron and steel products used in the project to be produced in the United States ("American Iron and Steel Requirement") including iron and steel products provided by the Contactor pursuant to this Agreement. The Contractor hereby represents and warrants to and for the benefit of the Purchaser and the State that (a) the Contractor has reviewed and understands the American Iron and Steel Requirement, (b) all of the iron and steel products used in the project will be and/or have been produced in the United States in a manner that complies with the American Iron and Steel Requirement, unless a waiver of the requirement is approved, and (c) the Contractor will provide any further verified information, certification or assurance of compliance with this paragraph, or information necessary to support a waiver of the American Iron and Steel Requirement, as may be requested by the Purchaser or the State. Notwithstanding any other provision of this Agreement, any failure to comply with this paragraph by the Contractor shall permit the Purchaser or State to recover as damages against the Contractor any loss, expense, or cost (including without limitation attorney's fees) incurred by the Purchaser or State resulting from any such failure (including without limitation any impairment or loss of funding, whether in whole or in part, from the State or any damages owed to the State by the Purchaser). While the Contractor has no direct contractual privity with the State, as a lender to the Purchaser for the funding of its project, the Purchaser and the Contractor agree that the State is a third-party beneficiary and neither this paragraph (nor any other provision of this Agreement necessary to give this paragraph force or effect) shall be amended or waived without the prior written consent of the State.

Appendix 5: Sample Certifications

The following information is provided as a sample letter of **step** certification for AIS compliance. Documentation must be provided on company letterhead.

Date

Company Name

Company Address

City, State Zip

Subject: American Iron and Steel Step Certification for Project (XXXXXXXXXX)

I, (company representative), certify that the (melting, bending, coating, galvanizing, cutting, etc.) process for (manufacturing or fabricating) the following products and/or materials shipped or provided for the subject project is in full compliance with the American Iron and Steel requirement as mandated in EPA's State Revolving Fund Programs.

Item, Products and/or Materials:

1. Xxxx
2. Xxxx
3. Xxxx

Such process took place at the following location:

_____

If any of the above compliance statements change while providing material to this project we will immediately notify the prime contractor and the engineer.

Signed by company representative

The following information is provided as a sample letter of certification for AIS compliance. Documentation must be provided on company letterhead.

Date

Company Name

Company Address

City, State Zip

Subject: American Iron and Steel Certification for Project (XXXXXXXXXX)

I, (company representative), certify that the following products and/or materials shipped/provided to the subject project are in full compliance with the American Iron and Steel requirement as mandated in EPA's State Revolving Fund Programs.

Item, Products and/or Materials:

1. Xxxx
2. Xxxx
3. Xxxx

Such process took place at the following location:

_____

If any of the above compliance statements change while providing material to this project we will immediately notify the prime contractor and the engineer.

Signed by company representative

May 30, 2014

American Iron & Steel (AIS) Requirement of the Consolidated Appropriations Act of 2014 (Public Law 113-76) Q&A Part 1: Valves and Hydrants

Q1: Does the AIS requirement of the Consolidated Appropriations Act of 2014 require minor, miscellaneous components within a covered valve or hydrant, such as nuts, bolts and washers, to be made in the U.S.?

A1: The definition of "iron and steel products" that must either be domestically produced or subject to a waiver in order to comply with the AIS requirement of the Consolidated Appropriations Act of 2014 includes valves and hydrants. Unlike many other of the "iron and steel products" that are listed in the definition, valves and hydrants are typically precision mechanical products with multiple fitted, operating parts and connections. Valves and hydrants, unlike most of the other listed products, contain other minor components, such as small washers, nuts, and bolts that are of unknown origin but are added to the valve or hydrant during the manufacturing process. For purposes of the 2014 AIS requirement, EPA considers only the significant iron and steel components of a covered valve or hydrant – the body, bonnet, shoe, stem, and wedge/disc/gate/ball – to be within the definition of "iron and steel products" that must either be made domestically, or otherwise must comply with the AIS requirement. The minor components represent a very small percentage of the iron and steel in the hydrants and valves that are defined as "iron and steel products." These minor components, which EPA has learned through our research are currently difficult to find domestically in sufficient quantity, such as minor nuts, bolts, and washers, are not required to be of U.S. origin.

Q2: Do the actuators/control systems attached to valves have to comply with the AIS requirement, or just the valve itself?

A2: The AIS requirement of the Consolidated Appropriations Act of 2014 includes valves in its definition of "iron and steel products" that recipients must make certain are either domestically made or subject to a waiver in order to comply with the AIS requirement. Actuators and control systems are not included in the definition. Only the valve itself is required to be either domestically produced or subject to a waiver in order to be compliant with the AIS requirement. Absent a waiver, EPA considers valves and hydrants to be domestically produced if the significant iron and steel components of a covered valve or hydrant – the body, bonnet, shoe, stem, and wedge/disc/gate/ball – if made of iron or steel, is produced in the U.S. See Q1 above for a discussion about minor components. The valves and actuators, while often purchased and shipped together, are two unique products that are manufactured separately and typically attached together during the final step of the process. Valves are included in the definition of "iron and steel products" in the AIS requirement. Actuators, whether manual, electric, hydraulic or pneumatic, are not listed as an "iron and steel product" under the AIS requirement of the Consolidated Appropriations Act of 2014, nor are they considered construction materials. Therefore, they do not need to be domestically produced in the U.S. in order to comply with the requirement.

Q3: Are electric powered motor operated valves excluded based on the valve being motorized equipment (i.e. electrical equipment)?

A3: No, electric powered motor operated valves are not excluded based on the valve being motorized equipment. The actuator, a motor that controls the valve, is considered a separate product, which is not

listed as an “iron and steel product” under the AIS requirement of the Consolidated Appropriations Act of 2014, nor is it considered a construction material. Therefore, the actuator does not need to be domestically produced in the U.S. in order to comply with the requirement. See Q2 for further clarification.

Q4: Based on EPA’s AIS guidance dated March 20, 2014, gates are not considered construction materials and therefore do not have to be produced in the U.S. Does that include gate valves?

A4: No, valves are specifically listed in the Consolidated Appropriations Act of 2014 as an “iron and steel product” and therefore, absent a waiver, must be produced in the U.S. to be in compliance with the requirement if they are “primarily” iron and steel. Gates as referenced in the EPA March 20, 2014 guidance refer only to common sluice and slide gates, and not to gate valves.

September 10, 2014

American Iron & Steel (AIS) Requirement of the Consolidated Appropriations Act of 2014 (Public Law 113-76)

Q&A Part 2

PRODUCT QUESTIONS

1. **Q: Do all fasteners qualify for de minimis exemption?**

   A: No. There is no broad exemption for fasteners from the American Iron and Steel (AIS) requirements. Significant fasteners used in SRF projects are not subject to the de minimis waiver for projects and must comply with the AIS requirements. Significant fasteners include fasteners produced to industry standards (e.g., ASTM standards) and/or project specifications, special ordered or those of high value. When bulk purchase of unknown-origin fasteners that are of incidental use and small value are used on a project, they may fall under the national de minimis waiver for projects. The list of potential items could be varied, such as big-box/hardware-store-variety screws, nails, and staples. The key characteristics of the items that may qualify for the de minimis waiver would be items that are incidental to the project purpose (such as drywall screws) and not significant in value or purpose (such as common nails or brads). See the following: http://water.epa.gov/grants_funding/upload/Deminimis-Waiver-04-15-14.pdf.

   EPA also clarifies that minor components of two listed products – valves and hydrants -- may not need to meet the AIS requirements if the minor components compromise a very small quantity of minor, low-cost fasteners that are of unknown origin. See EPA's questions and answers on the subject at the following: http://water.epa.gov/grants_funding/upload/AIS-QandA-Part-1-Valves-and-Hydrants-final.pdf.

2. **Q: Does PCCP pipe have to be domestically produced?**

   A: Yes. Pre-stressed concrete cylinder pipe (PCCP) or other similar concrete cylinder pipes would be comparable to pre-cast concrete which is specifically listed in the Consolidated Appropriations Act of 2014 as a product subject to the AIS requirement.

3. **Q: If the iron or steel is made from recycled metals will the vendor/supplier have to provide a certification document certifying that the recycled metals are domestically produced?**

   A: No. Recycled source materials used in the production of iron and steel products do not have to come from the U.S. Iron or steel scrap, for instance, are considered raw materials that may come from anywhere. While certification is not required for the raw material, EPA does recommend that additional final processing of iron and steel be certified to have occurred in the U.S.

4. **Q: Do tanks used for filtration systems, if delivered to the construction site separately and then filled with filtration media onsite, have to be domestically produced?**

A: No. Tanks that are specifically designed to be filters, or as parts of a filtration system, do not have to be domestically produced because these parts are no longer simply tanks, even if the filter media has not been installed and will be installed at the project site, as is customary to do for shipping purposes. These parts have only one purpose which is to be housing for filters and cannot be used in another fashion.

5. **Q: Can a recipient use non-domestic flanged pipe?**

   A: No. While the Consolidated Appropriations Act of 2014 does not specifically mention flanged pipe, since it does mention both pipe and flanges, both products would need to be domestically produced. Therefore, flanged pipe would also need to be domestically produced.

6. **Q: Can a recipient use non-domestic couplings, expansion joints, and other similar pipe connectors?**

   A: No. These products would be considered specialty fittings, due to their additional functionality, but still categorized under the larger "fitting" categorization. Fittings are defined as a material that joins pipes together or connects to a pipe (AWWA, The Drinking Water Dictionary, 2000). Therefore, these products must comply with the AIS requirements and be produced domestically.

7. **Q: Can a recipient use non-domestic service saddles and tapping sleeves?**

   A: No. These products are necessary for pipe repair, to tap a water main, or to install a service or house connection. Therefore, they are included under the larger "pipe restraint" category which is a specifically identified product subject to the domestic preference in the Consolidated Appropriations Act of 2014.

8. **Q: The AIS guidance does not appear to cover reused items (i.e., existing pipe fittings, used storage tanks, reusing existing valves). How should reused items be addressed?**

   A: The AIS guidance does not address reuse of items. Reuse of items that would otherwise be covered by AIS is acceptable provided that the item(s) was originally purchased prior to January 17, 2014, the reused item(s) is not substantially altered from original form/function, and any restoration work that may be required does not include the replacement or addition of foreign iron or steel replacement parts. EPA recommends keeping a log of these reused items by including them on the assistance recipient's de minimis list, and stating therein that these items are reused products. The donation of new items (such as a manufacturer waiving cost for certain delivered items because of concerns regarding the origin of a new product) is not, however, considered reuse.

9. **Q: What does "time needed" mean in the AIS guidance, in reference to the definition of "Reasonably Available Quantity"?**

A: For considering whether a product would meet reasonably available quantity, "time needed" is based on the construction schedule. If the item is delayed and there is substantial impact on the overall construction schedule, this would not be according to the "time needed."

10. **Q: If a product is not specifically included on the list of AIS covered products, must it comply with AIS?**

    A: Possibly. The AIS requirements include a list of specifically covered products, one of which is construction materials, a broad category of potential products. For construction materials, EPA's AIS guidance includes a set of example items that it considers construction materials composed primarily of iron and steel and covered by the Act. This example list in the guidance is not an all-inclusive list of potential construction materials. However, the guidance also includes a list of items that EPA specifically does not consider construction materials, generally those of electrical or complex-mechanical nature. If a product is similar to the ones in the non-construction material list (and it is also not specifically listed by the Act), it is not a construction material. For all other items specifically included in the Act, coverage is generally self-evident.

11. **Q: If a listed iron and steel product is used as a part for an assembled product that is non-domestic, do the AIS requirements apply?**

    A: AIS requirements only apply to the final product as delivered to the work site and incorporated into the project. Other assemblies, such as a pumping assembly or a reverse osmosis package plant, are distinct products not listed and do not need to be made in the U.S. or composed of all U.S. parts. Therefore, for the case of a non-covered product used in a larger non-domestic assembly, the components, even if specifically listed in the Consolidated Appropriations Act, do not have to be domestically produced.

12. **Q: Is cast iron excluded from the AIS requirements?**

    A: No. Cast iron products that fall under the definition of iron and steel products must comply with the AIS requirements.

13. **Q: The guidance states that "construction materials" do not include mechanical equipment, but then identifies ductwork as a construction material. Please clarify.**

    A: Ductwork is not mechanical equipment, therefore it is considered a "construction material" and must comply with the AIS requirements.

14. **Q: Do "meters" mentioned in EPA's guidance as non-construction materials include both flow meters and water meters?**

    A: Yes. "Meters" includes any type of meter, including: flow meters, wholesale meters, and water meters/service connections.

15. **Q: Must coiled steel be domestic?**

    A: Yes. Coiled steel is an intermediate product used in the production of steel pipe and must come from a U.S. source or subject to a waiver in order to comply with the AIS requirements.

16. **Q: Are pig iron, direct reduced iron (DRI), and ingot considered raw materials?**

    A: No. These are considered intermediate products used in the production of iron or steel and must come from a U.S. source or subject to a waiver in order to comply with the AIS requirements.

17. **Q: Can assistance recipients rely on a marking that reads, "Made in the USA," as evidence that all processes took place in the U.S.?**

    A: No. This designation is not consistent with our requirements that all manufacturing processes of iron and steel products must take place in the U.S.

18. **Q: When determining what constitutes a product made "primarily" of iron or steel, who makes this determination?**

    A: The manufacturer will show if its product qualifies as primarily made of iron or steel. The recipient should expect the manufacturer to provide documentation/ certification that its product is AIS compliant.

19. **Q: Do aerators need to be produced domestically in order to comply with AIS?**

    A: No. Aerators, similar to pumps, are mechanical equipment that do not need to meet the AIS requirements. "Blowers/aeration equipment, compressors" are listed in EPA's guidance as non-construction materials.

20. **Q: Are Sluice and Slide Gates considered valves?**

    A: No. Valves are products that are generally encased / enclosed with a body, bonnet, and stem. Examples include enclosed butterfly, ball, globe, piston, check, wedge, and gate valves. Furthermore, "gates" (meaning sluice, slide or weir gates) are listed in EPA's guidance as non-construction materials.

<u>AIS PROCESS QUESTIONS</u>

21. **Q: Will notices of waiver applications be published in the federal register?**

    A: No. Applications for waivers will be published on EPA's website (http://water.epa.gov/grants_funding/aisrequirement.cfm**).** EPA will provide 15 days for open public comment, as noted on the website.

22. Q: Will states be collecting the step certification paper trail, as presented in the AIS guidance?

A. No. Assistance recipients must maintain documentation of compliance with AIS. EPA recommends use of the step certification process. This process is a best practice and traces all manufacturing of iron and steel products to the U.S. If the process is used, the state does not have to collect the documentation. The documents must be kept by the assistance recipient and reviewed by the state during project reviews.

23. Q: Why is it considered a best practice for states to conduct site visits, when it is the assistance recipient's responsibility to meet the AIS requirements?

A: It is both the assistance recipient's and the state's responsibility to ensure compliance with the AIS requirements. The state is the recipient of a federal grant and must comply with all grant conditions, including a condition requiring that the AIS requirements be adhered to. Therefore, it is recommended that states conduct site visits of projects during construction and review documentation demonstrating the assistance recipient's proof of compliance.

24. Q: Please further define the state's role in the waiver process.

A: The state's role in the waiver process is to review any waiver requests submitted to the state in order to ensure that all necessary information has been provided by the assistance recipient prior to forwarding the request to EPA. If a state finds the request lacking, the state should work with the assistance recipient to help obtain complete information.

25. Q: How much time does EPA have to evaluate the waiver during the evaluation step?

A: At a minimum, EPA is required to provide 15 days for open public comment. There is no specific deadline or time limit for EPA to review waiver requests. Each waiver request will come with its own specific details and circumstances and may require a different amount of time for review and analysis. For example, public interest waivers in general may take longer to review than availability waivers which are typically more straightforward. However, EPA understands that construction may be delayed while waiting for a waiver and will make every effort to review and issue decisions on waiver requests in a timely manner.

PROJECT QUESTIONS

26. Q: What if a project is funded by another funding entity (i.e., United States Department of Agriculture – Rural Development) where AIS is not required and begins construction after January 17, 2014 but then applies to the SRF to refinance the project? Are they ineligible?

A: The project is not ineligible. AIS requirements will apply to any construction that occurs after the assistance agreement is signed, through the end of construction. If construction is complete, there is no retroactive application of the AIS requirements.

27. **Q: If the assistance recipient can demonstrate through market research that the AIS requirement will exceed the 25 percent cost threshold, is the entire project exempt from the AIS requirement?**

    A: If the waiver application shows that the inclusion of American iron and steel products causes the entire cost of the project to increase by more the 25 percent, a waiver may be granted for the entirety of the project.

28. **Q: Can the recipient use non-SRF funds to pay for the non-compliant item.**

    A: No. It is not an acceptable to use non-SRF funds to pay for a non-compliant item. The Consolidated Appropriations Act of 2014 requires that all iron and steel products, no matter the source of funding, must be made in the U.S. if SRF funds are used in the project.

29. **Q: What constitutes "satisfactory quality" as defined in the AIS guidance, in reference to the availability waiver process.**

    A: "Satisfactory quality" means the product meets the project design specifications. A waiver may be granted if a recipient determines that the project plans and design would be compromised because there are no American made products available that meet the project design specifications.

30. **Q: The guidance states that the AIS requirement applies to any project "funded in whole or in part" by an SRF. Where is this in the Act?**

    A: The Act states that, "None of the funds made available by a … [State SRF program] … shall be used for a project for the construction, alteration, maintenance, or repair of a public water system or treatment works unless all of the iron and steel products used in the project are produced in the United States." This sentence clearly states that no SRF program may use its funds for a project unless all of the iron and steel products used in the project are made in the U.S. This is true even if only $1 of SRF funding is used in the project.

31. **Q: There is always an expectation on the part of an assistance recipient that the construction phase of a planning and/or design only loan will be funded through the SRF. If the original planning and/or design only loan was executed prior to a January 17, 2014, does this mean the entire project will be exempt from the AIS requirement?**

    A: If the original loan includes construction, and was executed prior to January 17, 2014, then the AIS provision does not apply to the project. If the original loan was only for planning and/or design, then a written commitment or documented "expectation" is needed to show exemption from the

requirements. Appearance on a priority list in an Intended Use Plan along with written reasonable assurance from the state that the recipient will receive SRF funding for project construction could provide sufficient evidence of "expectation of funding".

32. **Q: What if there has been a change order or redesign requiring new plans and specifications to be approved and they were approved after January 17, 2014: does the project now have to comply with AIS?**

    A: In most cases, no. Change orders are typically small enough changes that the original plan and specification date will still hold true. For example, if a pipe alignment has to be changed for a block or two due to unforeseen conditions, but new plans and specifications had to be submitted for this section of the project, then that could be considered a minor change. However, if there has been a major redesign, perhaps the whole project had to be redesigned starting from scratch, then the new plans and specification approval date would apply.

33. **Q: What if the bids on a project with plans and specifications approved before January 17, 2014 but the loan is signed after January 17, 2014 come in low, and there is significant funding remaining in the loan agreement, so the community designs a second project with the remaining funds: does that project have to comply with the AIS requirements?**

    A: If the second project is closely related in purpose, place and time to the first project, then the second project would be exempt from the AIS requirements. It is the assistance recipient's responsibility (with state oversight) to show that a project is closely related, or not, in purpose, place and time.

34. **Q: What if the assistance agreement was signed after January 17, 2014, state approval of plans for the first phase of the project was in place prior to January 17, 2014, but state approval of the plans for the second phase of the project was received after January 17, 2014?**

    A: In such a case, the AIS provision would not apply to the first phase of the project. If the second phase of the project is considered the same project as the first phase, due to its close relation in purpose, place and time, the entire project may be exempt. It is the assistance recipient's responsibility (with state oversight) to show that phases of a project is closely related, or not, in purpose, place and time.

35. **Q: Do products purchased through procurement-only contracts have to be comply with AIS?**

    A: Yes. For projects funded by SRF, the products procured under any form of contract must comply with AIS. A procurement-only contract generally involves the bulk purchase of common items (such as pipe, concrete, and/or pumps) of independent timing from a set of planned projects. If products which are purchased through a procurement-only contract are being installed under another contract, the procurement-only contract would probably not be considered a separate project in purpose, place and time; and therefore, would have to comply with the AIS requirements.

March 2015

American Iron & Steel Requirement for the Clean Water and Drinking Water State Revolving Funds

Q&A Part 3

*For CWSRF and DWSRF: On **January 17, 2014**, Public Law 113-76, the "Consolidated Appropriations Act, 2014," was enacted and included an American Iron and Steel requirement for the Clean Water and Drinking Water State Revolving Fund programs through the end of fiscal year 2014. Since then, the AIS requirement has continued for both programs, but through different statutes, with a few changes as described in the questions and answers provided below.*

*For CWSRF: On **June 10, 2014**, the Water Resources Reform and Development Act amended the Clean Water Act to include permanent requirements for the use of AIS products in CWSRF assistance agreements. Section 608 of the CWA now contains requirements for AIS that repeat those of the Consolidated Appropriations Act, 2014. All CWSRF assistance agreements must comply with Section 608 of the CWA for implementation of the permanent AIS requirement.*

*For DWSRF: On **December 16, 2014**, the President signed Public Law 113- 235, the "Consolidated and Further Continuing Appropriations Act, 2015," which provides fiscal year 2015 full-year appropriations through September 30, 2015. This law continues the requirement for the use of AIS products in DWSRF assistance agreements through September 30, 2015.*

CWSRF PROGRAM

1. **Q: The Water Resources Reform and Development Act amended the Clean Water Act to include permanent requirements for the use of AIS for CWSRF funded assistance agreements. Does the CWA include an exemption for plans and specifications approved prior to the enactment of the legislation similar to the exemption included in the Consolidated Appropriations Act (CAA) 2014?**

   A: Yes. The WRRDA amendment to the CWA, which included AIS requirements, included a similar exemption as the CAA 2014. For any CWSRF assistance agreement signed on or after October 1, 2014, if the plans and specifications were approved prior to June 10, 2014 (the enactment of WRRDA), then the project is exempt from AIS requirements. For assistance agreements signed prior to October 1, 2014, the previous dates in the CAA 2014 apply (see March 20, 2014, AIS guidance document).

   If a project does not require approved engineering plans and specifications, the bid advertisement date will count in lieu of the plans and specifications approval date for purposes of this exemption in Section 608 (f).

   The following table summarizes AIS exemptions based on the plans and specifications approval date for CWSRF funded projects.

CWSRF AIS Project Exemption Based on Plans and Specifications Approval Date		
Assistance Agreement Signed:	Exempt from AIS if Plans and Specifications Were Approved Before:	Basis for Exemption:
1/17/2014 through 9/30/2014	4/15/2014	• Consolidated Appropriations Act 2014 • National waiver signed 4/15/2014*
On or after 10/1/2014	6/10/2014	• Clean Water Act Section 608

** To be covered by the national waiver, the plans and specifications had to be submitted to the state prior to 1/17/2014*

2. **Q: Does the AIS requirement apply to refinanced CWSRF projects?**

   A: Yes, in some cases. If a project began construction, financed from a non-CWSRF source prior to June 10, 2014, but is refinanced through a CWSRF assistance agreement executed on or after October 1, 2014, AIS requirements will apply to all construction that occurs on or after June 10, 2014, through completion of construction, unless engineering plans and specifications were approved by the responsible state agency prior to June 10, 2014. For CWSRF projects funded on or after October 1, 2014, there is no retroactive application of the AIS requirements where a refinancing occurs for a project that has completed construction prior to June 10, 2014.

DWSRF PROGRAM

3. **Q: The Consolidated and Further Continuing Appropriations Act 2015 continues the AIS requirements for DWSRF funded assistance agreements. Does the Act include an exemption for plans and specifications approved prior to the enactment of the legislation, similar to the exemption included in the Consolidated Appropriations Act (CAA) 2014?**

   A: Yes. The Consolidated and Further Continuing Appropriations Act 2015 includes a similar exemption as the CAA 2014. For any assistance agreement signed on or after December 16, 2014 (the enactment of the Act), if the plans and specifications were approved prior to December 16, 2014, then the project is exempt from the AIS requirements. For assistance agreements signed prior to December 16, 2014, the previous dates in the CAA 2014 apply (see March 20, 2014 AIS guidance document).

   If a project does not require approved engineering plans and specifications, the bid advertisement date will count in lieu of the plans and specifications approval date for purposes of the exemption in Section 424(f).

4. **Q: Do DWSRF assistance agreements signed during the time period between September 30, 2014, and December 16, 2014, still have to comply with the AIS requirements?**

A: Yes. The Continuing Appropriations Resolution 2015 was signed on September 19, 2014, which extended funding for the DWSRF with the same conditions that were made applicable by the language in the Fiscal Year 2014 appropriations, including the requirement for the use of American Iron and Steel products in projects receiving financial assistance from the DWSRF. Therefore, all assistance agreements starting October 1, 2014, through the enactment of the Consolidated and Further Continuing Appropriations Act 2015 (signed December 16, 2014), must include the AIS requirements. However, if the plans and specifications for any of these projects were approved prior to April 15, 2014 (the date the national waiver was signed), then the project is exempt from the AIS requirements.

The following table summarizes AIS exemptions based on the plans and specifications approval date for DWSRF funded projects.

DWSRF AIS Project Exemption Based on Plans and Specifications Approval Date		
Assistance Agreement Signed:	Exempt from AIS if Plans and Specifications Were Approved Before:	Basis for Exemption:
1/17/2014 through 9/30/2014	4/15/2014	• Consolidated Appropriations Act 2014 • National waiver signed 4/15/2014*
10/1/2014 through 12/15/2014	4/15/2014	• Continuing Appropriations Resolution 2015 (continued CAA 2014 requirements)** • National waiver signed 4/15/2014*
12/16/2014 through 9/30/2015	12/16/2014	• Consolidated and Further Continuing Appropriations Act 2015

** To be covered by the national waiver, the plans and specifications had to be submitted to the state prior to 1/17/2014*

*** Following the first continuing resolution, there were two additional CRs to fill the gap between 12/11/2014 and 12/16/2014*

5. **Q: Does the AIS requirement apply to refinanced DWSRF projects?**

A: Yes, in some cases. If a project began construction, financed from a non-DWSRF source prior to December 16, 2014, but is refinanced through a DWSRF assistance agreement executed on or after December 16, 2014, AIS requirements will apply to all construction that occurs on or after December 16, 2014, through completion of construction, unless engineering plans and

specifications were approved by the responsible state agency prior to December 16, 2014. For DWSRF projects funded on or after December 16, 2014, there is no retroactive application of the AIS requirements where a refinancing occurs for a project that has completed construction prior to December 16, 2014.

BOTH CWSRF AND DWSRF PROGRAMS

6. **Q: If a coating is applied to the external surface of a domestic iron or steel component, and the application takes place outside of the United States, would the product be compliant under the AIS requirements?**

   A: Yes. The product would still be considered a compliant product under AIS requirements. Any coating processes that are applied to the external surface of iron and steel components that would otherwise be AIS compliant would not disqualify the product from meeting the AIS requirements regardless of where the coating processes occur, provided that final assembly of the product occurs in the United States.

   The exemption above only applies to coatings on the *external surface* of iron and steel components. It does not apply to coatings or linings on internal surfaces of iron and steel products, such as the lining of lined pipes. All manufacturing processes for lined pipes, including the application of pipe lining, must occur in the United States for the product to be compliant with AIS requirements.

EXHIBIT H – AMERICAN IRON & STEEL CERTIFICATION

CERTIFICATION BY THE BORROWER OF COMPLIANCE WITH THE AMERICAN IRON & STEEL REQUIREMENTS SET FORTH IN THE LOAN AGREEMENT

The Borrower hereby certifies that it has obtained certification(s) of compliance with the American Iron & Steel requirements set forth in the loan agreement from each contractor and subcontractor working on the Project(s) funded with the proceeds from the Loan. To the best of the Borrower's knowledge, the costs being reimbursed with this requisition #____ are in compliance with the American Iron & Steel provision(s).

Date: _____ Signed: _____

By: Authorized Official

APPENDIX F

EPA SRF Regulations - Debarment & Suspension

INDEX

- Appendix F - Debarment & Suspension Special Notes
- Executive Order 12549 - Debarment and Suspension
- Certification Form Regarding Debarment& Suspension and Other Responsibility Matters

APPENDIX F
EPA REGULATIONS - DEBARMENT & SUSPENSION
SPECIAL NOTES

1.1 This contract is subject to the implementation of Executive Order 12549 regarding Debarment and Suspension as it pertains to projects under the USEPA Drinking Water State Revolving Fund program.

1.2 Reference is made to Executive Order 12549 and the Certification Form regarding Debarment and Suspension and other responsibility matters, which have been provided within this appendix of the Contract Specifications.

DEBARMENT & SUSPENSION

Executive Order 12549--Debarment and Suspension

Source: The provisions of Executive Order 12549 of Feb. 18, 1986, appear at 51 FR 6370, 3 CFR, 1986 Comp., p. 189, unless otherwise noted.

By the authority vested in me as President by the Constitution and laws of the United States of America, and in order to curb fraud, waste, and abuse in Federal programs, increase agency accountability, and ensure consistency among agency regulations concerning debarment and suspension of participants in Federal programs, it is hereby ordered that:

Section 1. (a) To the extent permitted by law and subject to the limitations in Section 1(c), Executive departments and agencies shall participate in a system for debarment and suspension from programs and activities involving Federal financial and nonfinancial assistance and benefits. Debarment or suspension of a participant in a program by one agency shall have government-wide effect.
(b) Activities covered by this Order include but are not limited to: grants, cooperative agreements, contracts of assistance, loans, and loan guarantees.
(c) This Order does not cover procurement programs and activities, direct Federal statutory entitlements or mandatory awards, direct awards to foreign governments or public international organizations, benefits to an individual as a personal entitlement, or Federal employment.

Sec. 2. To the extent permitted by law, Executive departments and agencies shall:
(a) Follow government-wide criteria and government-wide minimum due process procedures when they act to debar or suspend participants in affected programs.
(b) Send to the agency designated pursuant to Section 5 identifying information concerning debarred and suspended participants in affected programs, participants who have agreed to exclusion from participation, and participants declared ineligible under applicable law, including Executive Orders. This information shall be included in the list to be maintained pursuant to Section 5.
(c) Not allow a party to participate in any affected program if any Executive department or agency has debarred, suspended, or otherwise excluded (to the extent specified in the exclusion agreement) that party from participation in an affected program. An agency may grant an exception permitting a debarred, suspended, or excluded party to participate in a particular transaction upon a written determination by the agency head or authorized designee stating the reason(s) for deviating from this Presidential policy. However, I intend that exceptions to this policy should be granted only infrequently.

Sec. 3. Executive departments and agencies shall issue regulations governing their implementation of this Order that shall be consistent with the guidelines issued under Section 6. Proposed regulations shall be submitted to the Office of Management and Budget for review within four months of the date of the guidelines issued under Section 6. The Director of the Office of Management and Budget may return for reconsideration proposed regulations that the Director believes are inconsistent with the guidelines. Final regulations shall be published within twelve months of the date of the guidelines.

Sec. 4. There is hereby constituted the Interagency Committee on Debarment and Suspension, which shall monitor implementation of this Order. The Committee shall consist of representatives of agencies designated by the Director of the Office of Management and Budget.

Sec. 5. The Director of the Office of Management and Budget shall designate a Federal agency to perform the following functions: maintain a current list of all individuals and organizations excluded from program participation under this Order, periodically distribute the list to Federal agencies, and study the feasibility of automating the list; coordinate with the lead agency responsible for government-wide debarment and suspension of contractors; chair the Interagency Committee established by Section 4; and report periodically to the Director on implementation of this Order, with the first report due within two years of the date of the Order.

Sec. 6. The Director of the Office of Management and Budget is authorized to issue guidelines to Executive departments and agencies that govern which programs and activities are covered by this Order, prescribe government-wide criteria and government-wide minimum due process procedures, and set forth other related details for the effective administration of the guidelines.

Sec. 7. The Director of the Office of Management and Budget shall report to the President within three years of the date of this Order on Federal agency compliance with the Order, including the number of exceptions made under Section 2(c), and shall make recommendations as are appropriate further to curb fraud, waste, and abuse.

Implementation in the SRF Programs

A company or individual who is debarred or suspended cannot participate in primary and lower-tiered covered transactions. These transactions include SRF loans and contracts and subcontracts awarded with SRF loan funds.

Under 40 C.F.R. 32.510, the SRF agency must submit a certification stating that it shall not knowingly enter into any transaction with a person who is proposed for debarment, suspended, declared ineligible, or voluntarily excluded from participation in the SRF program. This certification is reviewed by the EPA regional office before the capitalization grant is awarded.

A recipient of SRF assistance directly made available by capitalization grants must provide a certification that it will not knowingly enter into a contract with anyone who is ineligible under the regulations to participate in the project. Contractors on the project have to provide a similar certification prior to the award of a contract and subcontractors on the project have to provide the general contractor with the certification prior to the award of any subcontract.

In addition to actions taken under 40 C.F.R. Part 32, there are a wide range of other sanctions that can render a party ineligible to participate in the SRF program. Lists of debarred, suspended and otherwise ineligible parties are maintained by the General Services Administration and should be checked by the SRF agency and all recipients of funds directly made available by capitalization grants to ensure the accuracy of certifications.

Additional References

C 40 C.F.R. Part 32: EPA Regulations on Debarment and Suspension.

CERTIFICATION REGARDING DEBARMENT & SUSPENSION AND OTHER RESPONSIBILITY MATTERS

In accordance with the Executive Order 12549, the prospective primary participant certifies to the best of his / her knowledge and belief, that its principals:

a. Are not presently debarred, suspended, proposed for debarment, declared ineligible, or voluntarily excluded from covered transactions by any federal department or agency;

b. Have not within a three-year period preceding this proposal been convicted of or had a civil judgment rendered against them for commission of fraud or a criminal offence in connection with obtaining, attempting to obtain, or performing a public (federal, state, or local) transaction or contract under a public transaction; violation of federal or state antitrust statutes or commission of embezzlement, theft, forgery, bribery, falsification or destruction or records, making false statements, or receiving stolen property;

c. Are not presently indicted for or otherwise criminally or civilly charged by a governmental entity (federal, state, or local) with commission of any of the offenses enumerated in paragraph (1) (b) of this certification.

d. Have not within a three-year period preceding this application / proposal had one or more public transactions (federal, state, or local) terminated for cause of default.

e. Acknowledge that all sub-contractors selected for this project must be in compliance with paragraphs (1) (a – d) of this certification.

_____ _____

Name and Title of Authorized Agent Date

_____ _____

Signature of Authorized Agent Company Name

_____ I am unable to certify to the above statements. My explanation is attached.

APPENDIX G

National Grid, “Cast Iron Gas Main Encroachment"

GAS UTILITY GENERAL NOTES

1. CONTRACTOR SHALL FOLLOW THE GUIDELINES LISTED IN NATIONAL GRID'S "GUIDELINES FOR WORKING AROUND GAS UTILITIES", DOCUMENT ATTACHED.

2. DEPTH OF GAS FACILITIES ARE UNKNOWN AND COULD BE SHALLOW, USE CAUTION WHEN WORKING IN THE VICINITY OF ANY GAS FACILITY, HAND DIGGING ONLY.

3. NATIONAL GRID REQUIRES A MINIMUM OF ONE FOOT OF SEPARATION BETWEEN CROSSING UTILITIES AND EXISTING GAS FACILITIES.

4. NATIONAL GRID REQUIRES A MINIMUM OF THREE FEET OF SEPARATION BETWEEN THE GAS MAIN AND THE PARALLEL FACILITY FOR STEEL AND PLASTIC GAS MAINS. **FOR CAST IRON GAS MAIN SEE LINE ITEM FOR ENCROACHMENT GUIDELINES.**

5. IF A **GAS MAIN IS** EXPOSED OR **GOING TO BE EXPOSED** CALL NATIONAL GRID DAMAGE PREVENTION DEPARTMENT FOR AN INSPECTOR TO BE DISPATCHED TO SITE. CALL DAVID SOLTYS 401-623-0579 OR RICK LEPAGE 401-948-8432.

6. FOR ANY EXPOSED GAS FACILITY, PROVIDE BACKFILL MATERIALS AND COMPACT THE BACKFILL MATERIALS IN ACCORDANCE WITH NATIONAL GRID'S "GUIDELINES FOR BACKFILL AND COMPACTION AROUND GAS PIPES", DOCUMENT ATTACHED.

7. WHEN CROSSING OR EXPOSING A STEEL OR PLASTIC GAS FACILITY SUPPORT MAY BE REQUIRED. FOLLOW THE GUIDELINES LISTED AND ILLUSTRATED IN NATIONAL GRID'S "SUPPORT REQUIREMENTS FOR EXPOSED & UNDERMINED STEEL OR PLASTIC GAS FACILITIES", DOCUMENT (DWG NO. CNST-6045) ATTACHED.

8. ALL GAS VALVE BOXES SHALL BE ADJUSTED TO THE NEW ROAD/SIDEWALK SURFACE. VALVE BOXES, IF REQUIRED FOR REPLACEMENT, CAN BE OBTAINED AT NATIONAL GRID'S PROVIDENCE LOCATION, 477 DEXTER STREET, PROVIDENCE, RI OR LINCOLN LOCATION, 642 GEORGE WASHINGTON HIGHWAY (QUANTITIES 5 OR LESS). GAS VALVE BOXES NEED TO BE ACCESSIBLE AT ALL TIMES TO BE OPERATED BY NATIONAL GRID IN THE EVENT OF AN EMERGENCY.

9. DUE TO SYSTEM RELIABILITY AND SAFETY CONCERNS, IT IS NATIONAL GRID'S PRACTICE TO RESTRICT ALL CONSTRUCTION ON OR NEAR GAS FACILITIES BETWEEN NOVEMBER 15TH AND APRIL 15TH. ALL SCHEDULED WORK SHOULD BE COMPLETED BETWEEN APRIL 15TH AND NOVEMBER 15TH. AS GAS USAGE PEAKS DURING THE MONTHS OF DECEMBER TO MARCH DRIVEN BY HEATING NEEDS, NATIONAL GRID'S PRIORITY IS TO PROVIDE OUR CUSTOMERS WITH SAFE AND RELIABLE SERVICE. ANY WORK ON OR NEAR THE GAS FACILITY WILL EXPOSE OUR CUSTOMERS TO UNNECESSARY RISK. EXCEPTIONS WILL BE CONSIDERED ON A CASE BY CASE BASIS. APPROVALS FROM GAS CONTROL, OPERATIONAL ENGINEERING AND PROJECT ENGINEERING WILL BE REQUIRED FOR THESE CASES.

10. FOR A GAS LEAK CALL 800-640-1595.

11. FOR A DAMAGED GAS FACILITY CALL 800-870-1664.

Cast Iron Involvement

12. IF EXCAVATING PARALLEL TO OR CROSSING A CAST IRON GAS FACILITY THEN ENCROACHMENT OF THE CAST IRON LINE IS A POSSIBILITY AND A CONCERN WHERE REPLACEMENT MAY BE REQUIRED. WHENEVER AN EXCAVATION IS IN THE VICINITY OF A CAST IRON GAS MAIN CONTACT NATIONAL GRID ENCROACHMENT ENGINEER TO BE ON SITE, CALL CHRIS FERRANTI AT 401-465-9064. GUIDELINES IN AVOIDING AN ENCROACHMENT ARE LISTED IN NATIONAL GRID'S "CAST IRON GAS MAIN ENCROACHMENT PREVENTION", DOCUMENT ATTACHED.

13. NATIONAL GRID DOES NOT ALLOW MORE THAN 10' OF GAS MAIN TO BE EXPOSED AND ONLY ALLOWS (1) BELL & SPIGOT JOINT TO BE EXPOSED. FOR CAST IRON GAS MAIN GREATER THAN 8" OR 8" AND LESS NOT ENCROACHED, AN EXPOSED BELL & SPIGOT JOINT MUST BE LEAK CLAMPED BY NATIONAL GRID OR ITS CONTRACTOR BEFORE BACKFILL UNLESS A CLAMP IS ALREADY IN PLACE. PROVIDE BACKFILL MATERIALS AND COMPACT THE BACKFILL MATERIALS IN ACCORDANCE WITH NATIONAL GRID'S "GUIDELINES FOR BACKFILL AND COMPACTION AROUND GAS PIPES", DOCUMENT ATTACHED. MINIMUM 95% COMPACTION OF THE SOIL BELOW A CAST IRON IS ALWAYS REQUIRED. ALWAYS CALL NATIONAL GRID DAMAGE PREVENTION DEPARTMENT FOR AN INSPECTOR TO BE DISPATCHED TO SITE. CALL DAVID SOLTYS 401-623-0579 OR RICK LEPAGE 401-948-8432.

Cast Iron Gas Main Encroachment Prevention

CI Encroachments

- CI Encroachments can occur when excavating under or next to CI gas mains
- CI Encroachments can occur **Even when a gas main is not exposed**
- Two types of Encroachments: Undermine and Parallel
  - **Undermine Encroachments (Cross Trench)**
  - **Parallel Encroachments**

Cross Trench

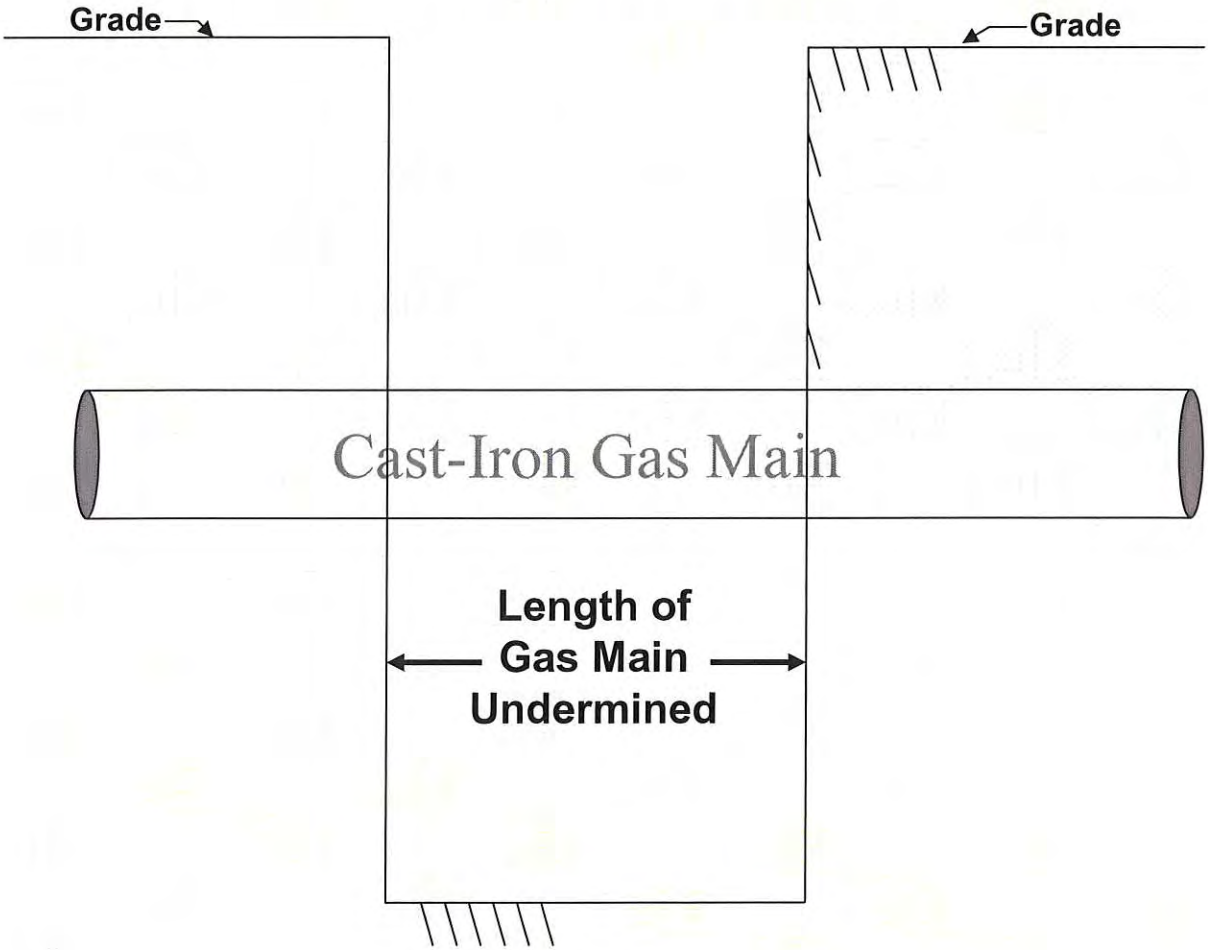

Elevation View

Cross Trench - Rules of Thumb:

- The shorter the undermine, the better
- Limiting the length of the undermine to 30" or less will always avoid an encroachment

Cross Trench with Tunneling

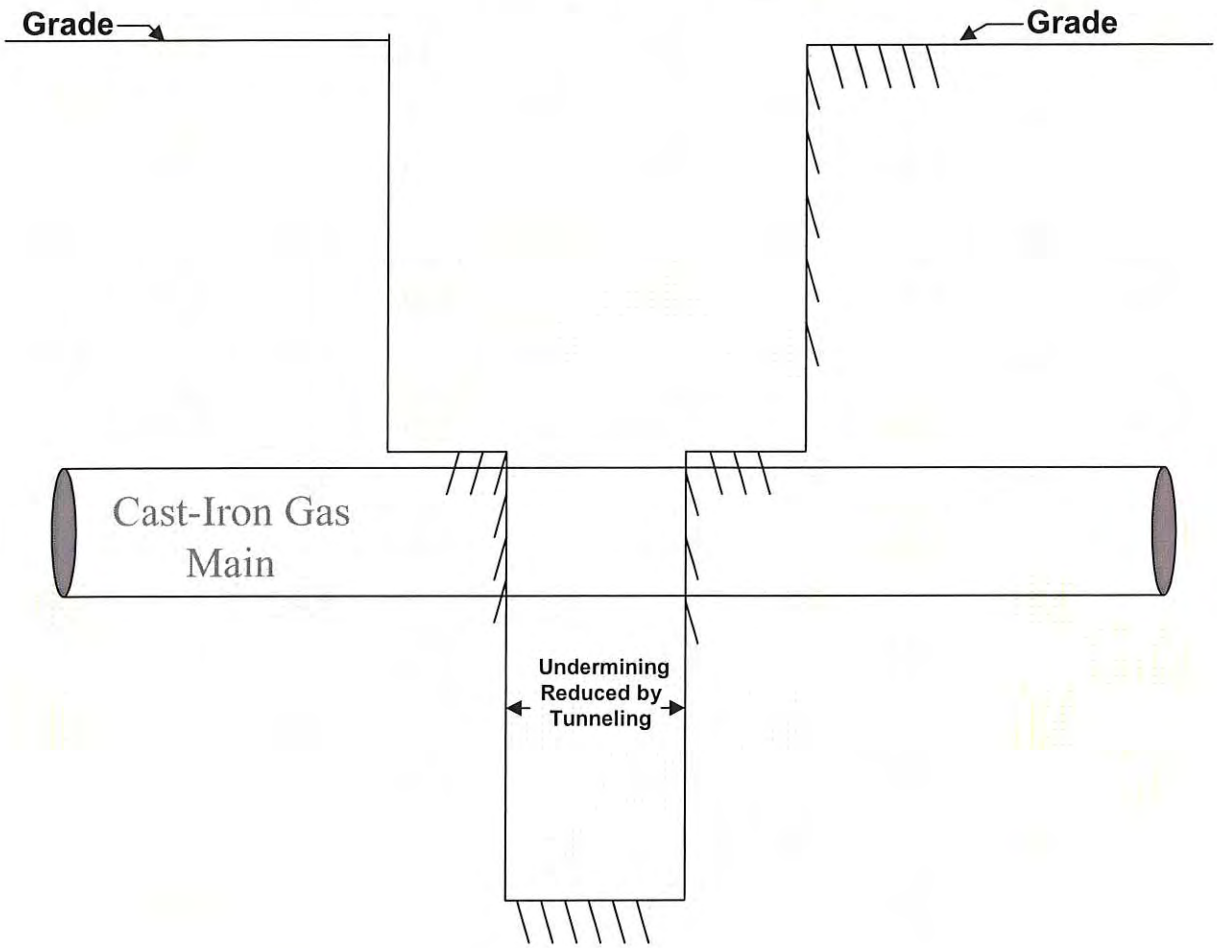

Elevation View

Tunneling is an Effective Way of Preventing Encroachments

Angle Crossings
S-t-r-e-t-c-h
The Affected Area

(view from above looking down)

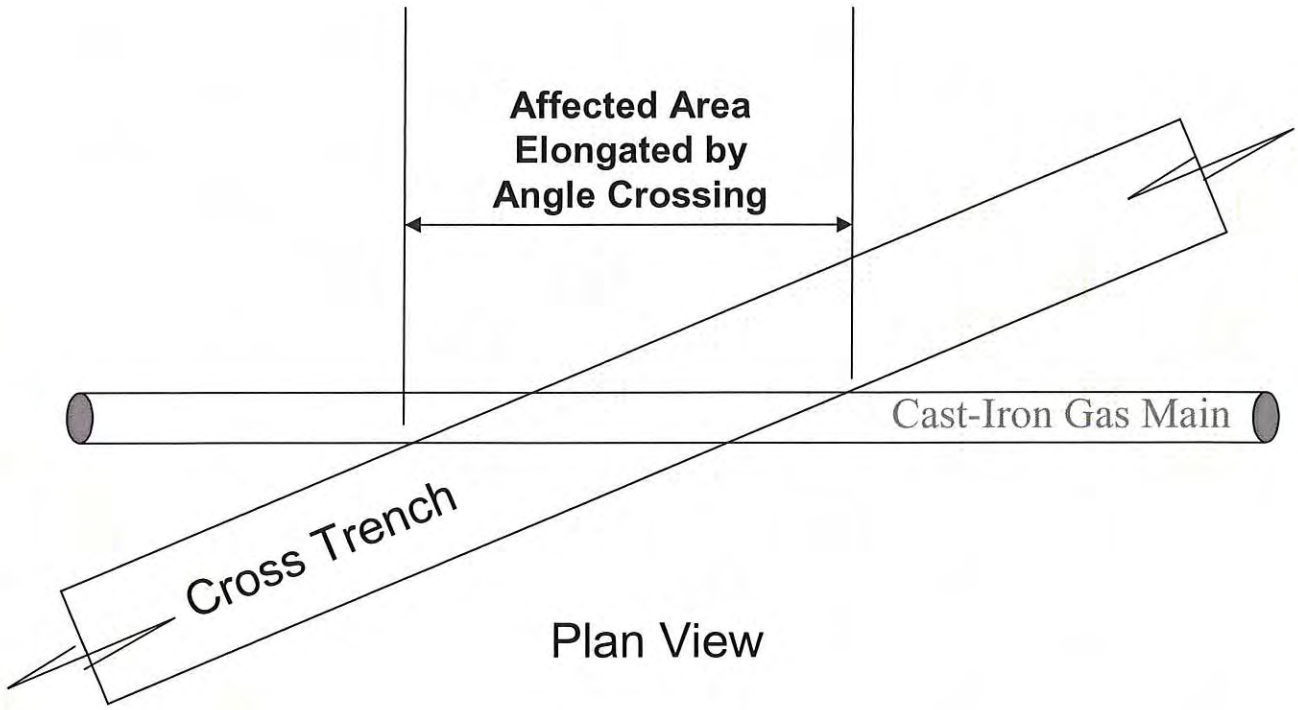

Plan View

Rule of Thumb:

- **Whenever possible, cross CI Gas Mains at 90 degree angles**

Cast Iron Encroachments
can occur even when the
Gas Main is not Exposed

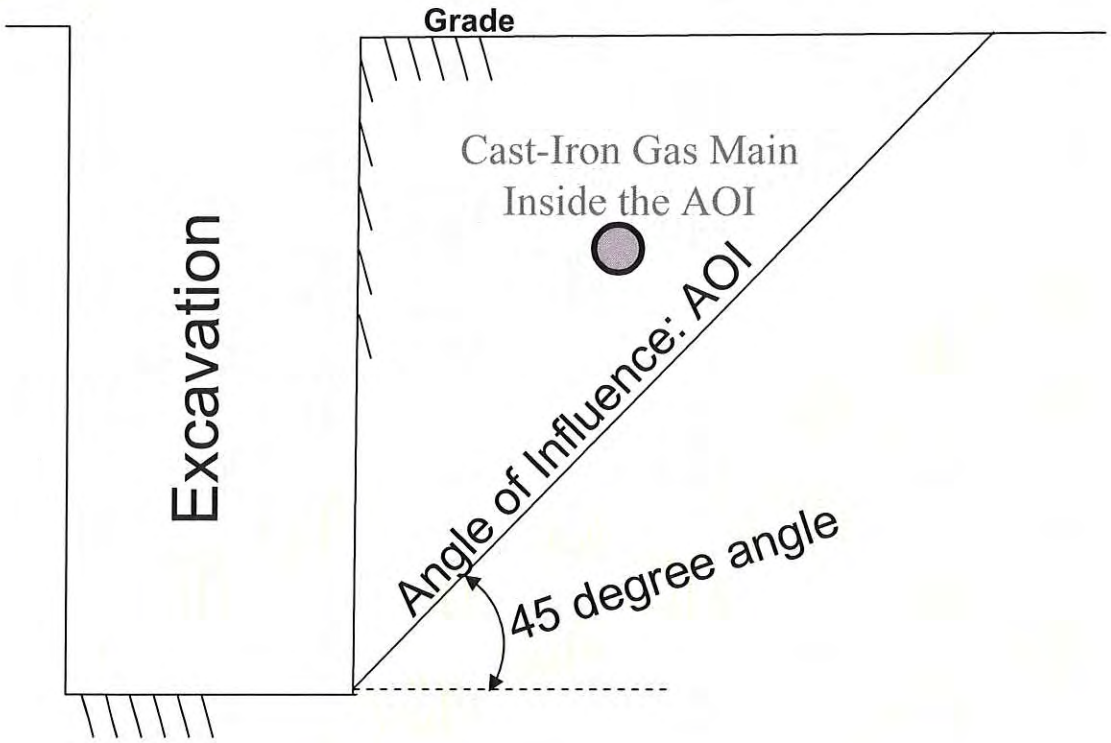

Angle of Influence:

- **The AOI extends up from the bottom of the excavation at a 45 degree angle**
- **The AOI can affect cast iron gas mains even if the gas main is not exposed**

Excavation Next to Gas Main

(view from above looking down)

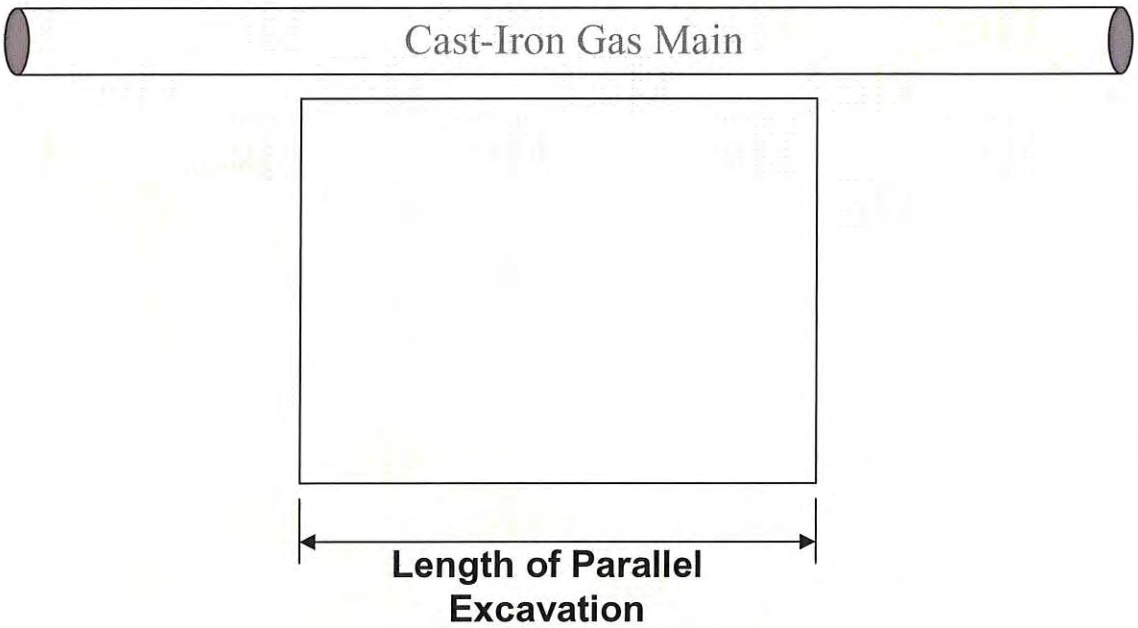

Plan View

Parallel Excavation Rule of Thumb:

- **Limiting the length of the parallel to 7'-6" or less will always avoid an encroachment**

Parallel Excavation with Sloped Ends

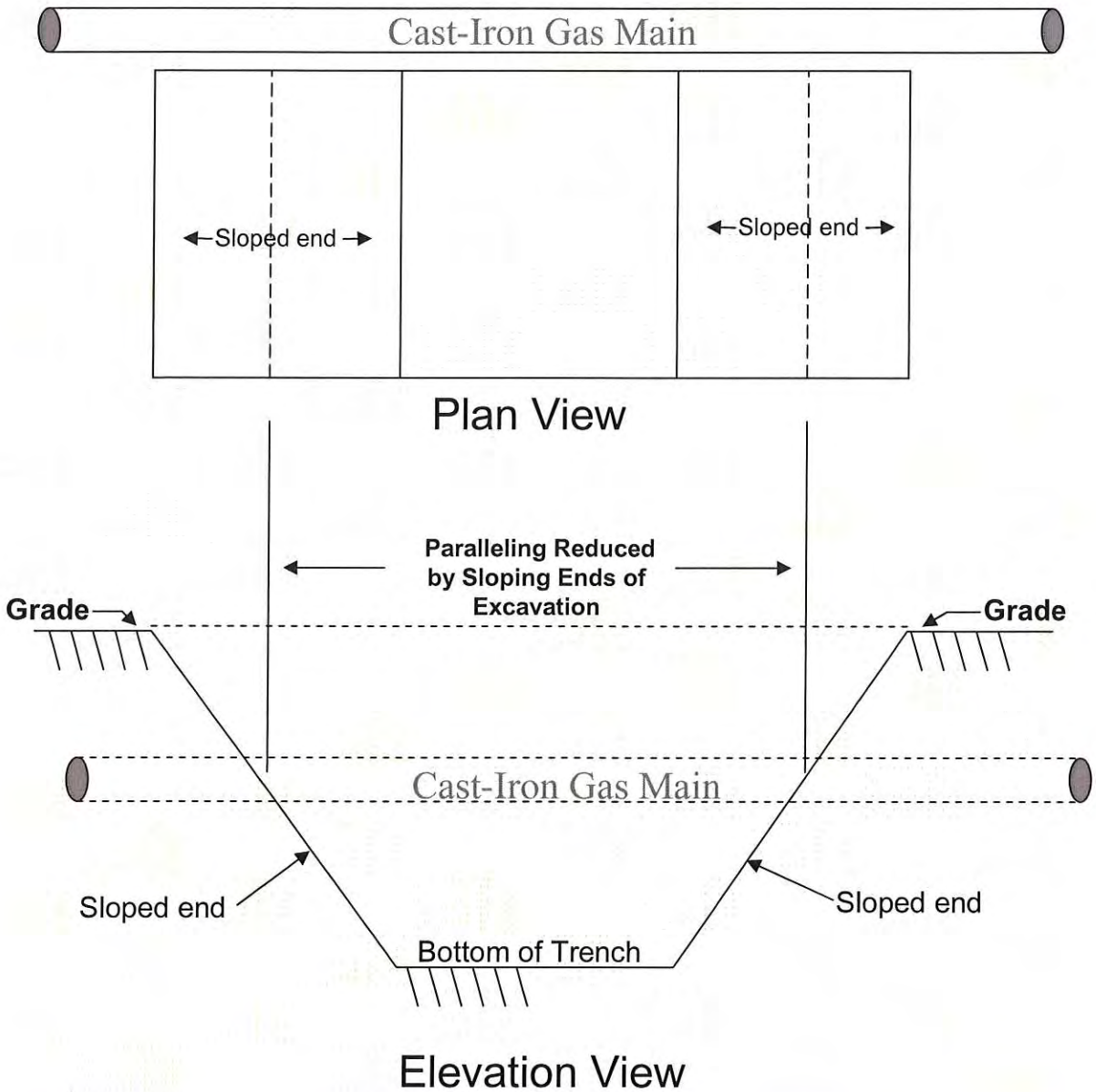

Sloping the ends of an Excavation can be an Effective Way of Preventing Encroachments

Trenching Next to Gas Main

(view from above looking down)

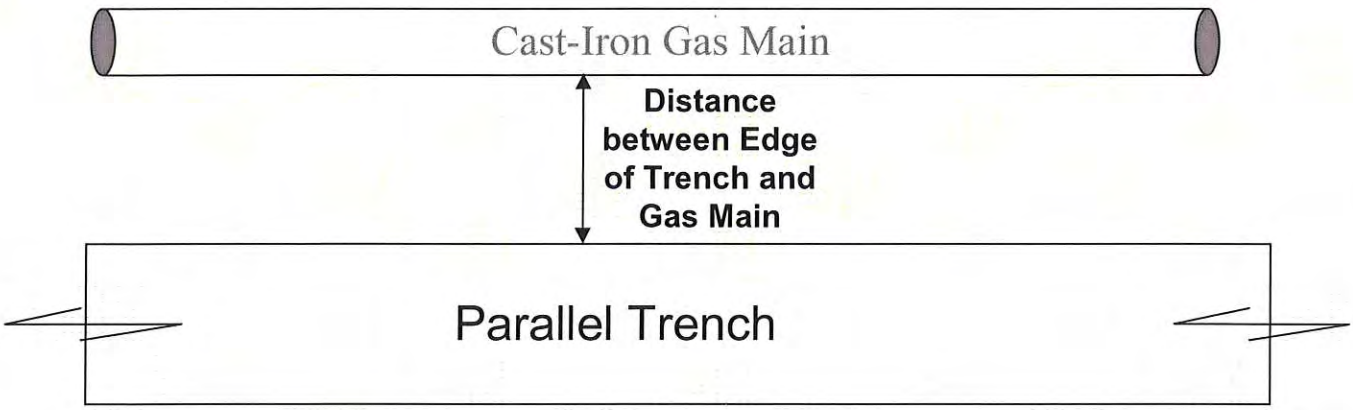

Plan View

Parallel Trenching Rules of Thumb:

- **The greater the separation between the gas main and the trench, the better**
- **Keeping the distance between the excavation and the gas main greater than the (depth of the trench - 2') will in most cases avoid an encroachment**

CI Encroachments

- CI Encroachments can occur when excavating under or next to CI gas mains
- CI Encroachments can occur **Even when a gas main is not exposed**
- Two types of Encroachments: Undermine and Parallel
  - **Undermine Encroachments (Cross Trench)**
    - In all cases, the shorter the length of gas main undermined the better
    - Limiting undermining to less than 30" in length will always avoid an encroachment
    - Tunneling under the gas main can be an effective method for avoiding encroachments
    - Whenever possible cross CI gas mains at 90 degree angles
  - **Parallel Encroachments**
    - Parallel Encroachments can occur even if the gas main is not exposed
    - In all cases, the greater the separation between the gas main and the parallel excavation, the better
    - Limiting excavations adjacent to gas main to less than 7'-6" in length will always avoid an encroachment
    - Keeping parallel excavations more than the (depth of the trench – 2') from gas main in most cases will prevent an encroachment

nationalgrid

10/01/12

Guidelines for Working Around Gas Utilities

Notification of Construction

National Grid requests at least six week advanced notification prior to the start of construction to perform scheduled work in the proposed project area. Be aware that some gas work cannot be performed during the normal heating season.

Support and Protect

Contractor must call Dig Safe to have the gas mains and services marked out before construction. Care must be exercised when saw cutting over any gas infrastructure, especially services, which are more shallow than the main. Depth of gas mains vary. Contractor shall dig test pits in order to ascertain exact locations, cover and invert elevations, clearances, alignment and operating status of existing gas facilities. Contractor shall exercise extreme caution when excavating in the vicinity of any gas facility. Hand excavation shall be performed to locate all gas facilities and whenever digging within 24" of gas facilities. If cover over gas piping is removed the required cover must be replaced, or if not feasible, National Grid must be notified for review of the issue. Undermined gas pipe must be adequately supported and protected from damage. Contact National Grid engineer for guidelines regarding proper pipe support. Significant vibration from pile driving and such may negatively impact gas facilities, particularly cast iron mains and regulator station vaults. Contact National Grid engineer prior to performing such activities as well as operations which may undermine gas facilities such as micro-tunneling, jacking, directional drilling, etc.

Gas Leaks

For any gas leak please call the appropriate number immediately.
Greater Boston - 800-233-5325
Other Massachusetts – 800-548-8000
Rhode Island – 800-640-1595

Types of Gas Facilities

Gas mains and services are made of several different materials and contain a wide range of pressures. Typical materials used for buried gas pipe includes bare steel, coated steel, plastic, cast iron, wrought iron, ductile iron, and copper. Never assume that a pipe is not gas. At times gas lines are inserted into older lines to save excavation cost.

Exposure of Gas Facilities

If any gas mains or services become exposed, National Grid must be notified to inspect the line before backfilling. Also any damage that may have been made to the pipe or pipe coating will need to be repaired by National Grid before backfilling. Contact our Dispatch office at (877) 304-1203 for inspection. It is important that even minor damage or scrapes be reported to National Grid. Backfill shall be 6" of sand around the gas line and clean compacted fill above.

Regulator Stations
Gas regulator stations are particularly critical facilities and National Grid must be notified whenever work is to take place within 200 feet of a station. Regulator stations are typically in buried vaults accessed through either manhole covers or aluminum doors. ONLY AUTHORIZED NATIONAL GRID EMPLOYEES SHALL OPEN A REGULATOR STATION VAULT. Be aware that a complex nest of piping and valves often exists in the vicinity outside the vaults.

Blasting
National Grid must be notified of any blasting that will take place within 200 feet of a gas utility. National Grid must be supplied with a detailed blast plan for blasting in the vicinity of gas facilities. The evaluation of the blast plan by a National Grid engineer may take some time, therefore, blast plan data should be submitted at least two weeks prior to the planned blasting. As a general rule blasting will not be permitted within 10 feet of a gas line and PPV at the nearest gas pipe shall not exceed 5 in/sec. PPV at the nearest gas main shall be monitored.

Valves
Access to gas valves must be maintained throughout construction and left at grade at the end of construction. Should valve boxes be damaged and need to be replaced National Grid will supply replacements upon request. NEVER OPERATE A GAS VALVE. ONLY NATIONAL GRID SHALL OPERATE GAS VALVES.

Clearance
Adequate clearance must be provided when installing other utilities, foundations, structures, etc. Contact National Grid engineer for guidance.

GUIDELINES FOR SUPPORT of GAS PIPES
TEMPORARY SUPPORT of GAS PIPES

DESCRIPTION

This work shall consist of temporarily supporting gas pipes, during construction work and related activities. Any gas pipe that is exposed shall follow this specification stipulating pipe support criteria. Whether gas pipe is located directly in the excavation trench box or if it is located in the excavated adjacent slopes (Angle of Repose) all gas pipe must be supported.

When gas pipe is undermined for 5 feet or more at any given time, Nationalgrid must be notified and a decision will be made on what type of support system will be utilized. Nationalgrid reserves the right to insist that a Rhode Island Registered Professional Engineer submit plans, if the gas pipe being supported exceeds an unsupported span length of 12 feet, is located in cohesive soils (wet, silty soils), or feels that the structural integrity of the gas distribution system may be compromised.

All cast iron gas pipes will be replaced and not be temporarily supported, unless determined differently by Nationalgrid. This criterion is in accordance with Section 6315.6 of Nationalgrid's *Operations Standards and Practices Manual*.

The following criteria should be used as guidelines when undermining existing steel or plastic gas pipes:

STEEL GAS PIPE

If pipe is undermined for a distance between 5 and 10 feet, the support system should consist, as a minimum, of adequately sized steel I-beams, steel plate girders, or 6" x 6" wood beams (Hem-Fir) with a sling supporting the pipe mid-span. For distances greater than 10 feet, these temporary support beams will have slings supporting the pipe every 10 to 12 feet along the length of the undermined pipe. Furthermore, when a mechanical coupling or fitting is encountered at any span length, the slings must be placed on either side of the fitting to avoid buckling.

PLASTIC GAS PIPE

If pipe is undermined for a distance between 5 and 10 feet, the support system should consist, as a minimum, of adequately sized steel I-beams, steel plate girders, or 4" x 4" wood beams (Hem-Fir) with a sling supporting the pipe mid-span. For distances greater 10 feet, these temporary support beams will have slings supporting pipe every 10 to 12 feet along the length of the undermined pipe. Furthermore, when a mechanical coupling or fitting is encountered, the slings must be placed on either side of the fitting to avoid buckling.

GUIDELINES FOR BACKFILL AND COMPACTION AROUND GAS PIPES

PERMANENT BACKFILL AND COMPACTION

DESCRIPTION

This work shall consist of backfilling and compacting all disturbed material at and around existing gas pipes and facilities. Size of pipe, material, length of exposed pipe, location of pipe, etc. will all follow the same set of Standards and Specifications stipulated by Nationalgrid Company. If design plans call for gas pipes to be exposed and supported (sheeting methods not used), then at the time of backfill, all disturbed material below the invert of the gas pipe shall be removed and replaced with suitable roadway or trench excavation material or bedding material. The contractor will not be allowed to replace this disturbed material with the same existing material if it has now been mixed with adjacent silty subsoil (clays) and fines. Well-graded gravel and sands will be used to replace the unsuitable material when no excess suitable material is available on site. Soils with high humus or mineral content should not be used to for backfill because they can promote electrolytic or bacterial attack.

Backfilling the gas pipe should begin immediately after the work in that location is complete. The region within 6" alongside and on top of the gas pipe shall be backfilled with padding sand (free of cinders, ash, and rock). In no case shall the material used for backfilling in this region contain any stones. Backfill shall consist of suitable materials (medium to coarse sands with little or no silts) placed in layers of not more than 8" to 12" after compaction.

Trench spoil material shall be suitable for backfilling above the padding material as long as rocks with a diameter larger than 3" are removed. The layers shall be mechanically compacted to the industry standard of 95% or until a density comparable to the unexcavated material is achieved. In some instances, flooding with water is an acceptable method of compaction but only if the back-fill material is clean, coarse, and adequate drainage is existent. The above specified backfill material is essential in order to attain the degree of compaction necessary to avoid future settlement.

Tracing Wire, if necessary, shall be installed 2” to 6” below Plastic gas pipes.

Warning Tape shall be installed approximately 12” above the gas pipe.

A minimum of 2" temporary pavement shall be applied over the trench as soon as possible.

Typical Utility Crossing and Trench Guidelines

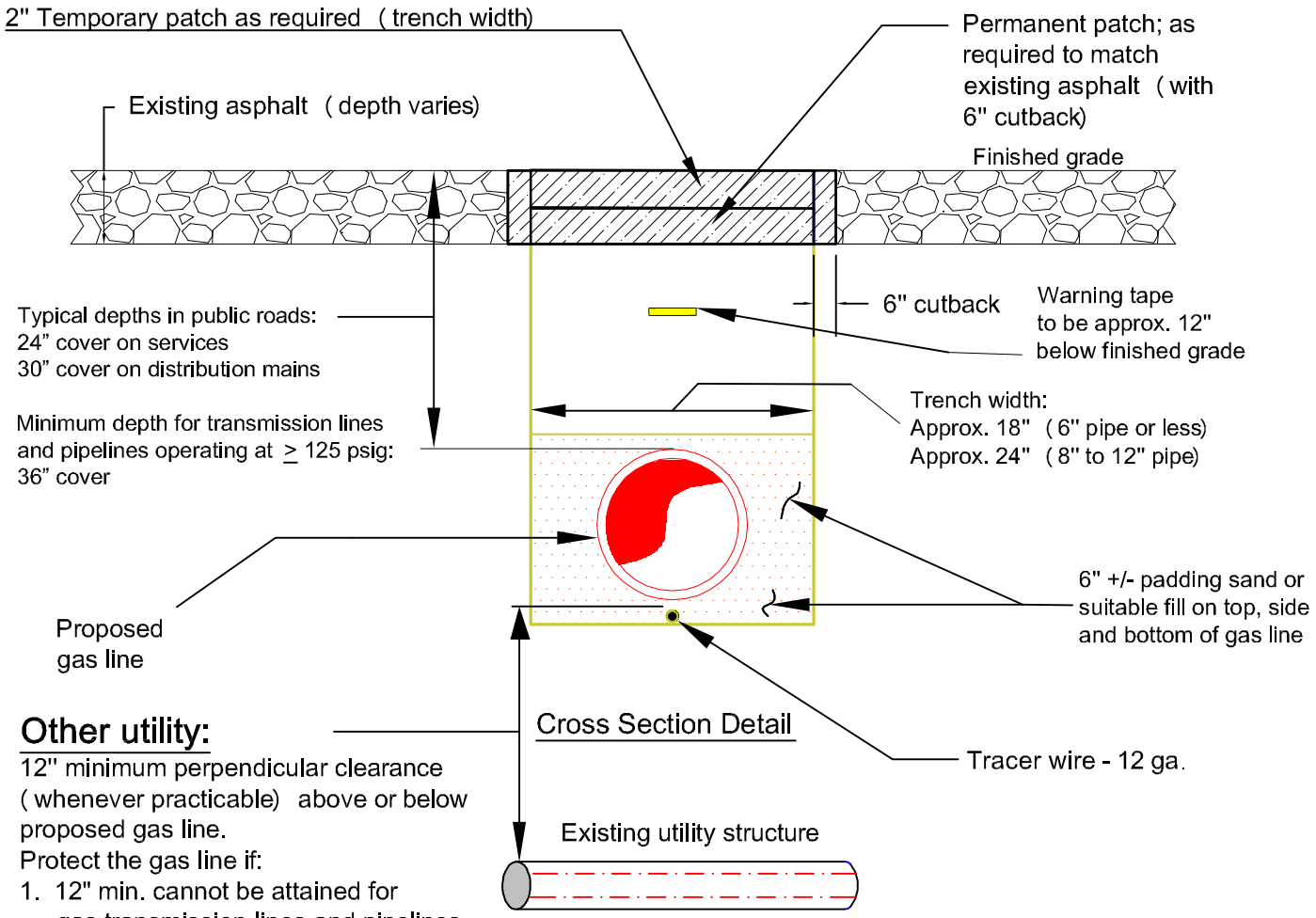

Other utility:

12" minimum perpendicular clearance (whenever practicable) above or below proposed gas line.

Protect the gas line if:

1. 12" min. cannot be attained for gas transmission lines and pipelines operating at ≥ 125 psig.
2. 6" min. cannot be attained for distribution mains.
3. 4" min. cannot be attained for services.

Minimum clearance when protection is provided against damage is 2" for all gas lines.

Pipeline backfill will consist of suitable materials (medium to coarse sands with little or no silts) placed in layers of no more than 8" to 12" after compaction. Trench spoil materials suitable for backfilling will be mechanically compacted to the industry standards of 95% (as measured by Drop-Cone Penetrometer method) or until a density comparable to the unexcavated material is achieved.

nationalgrid RI	**TYPICAL UTILITY CROSSING AND TRENCH GUIDELINES**	
Key Changes:	DATE: 09/15/2014 DESIGN: N. COSTANZO DRAWN: N. COSTANZO	EFFECTIVE DATE: 09/15/2014 STD. DWG. NO. **CS-CNST002**

© National Grid Gas plc 2014– All Rights Reserved

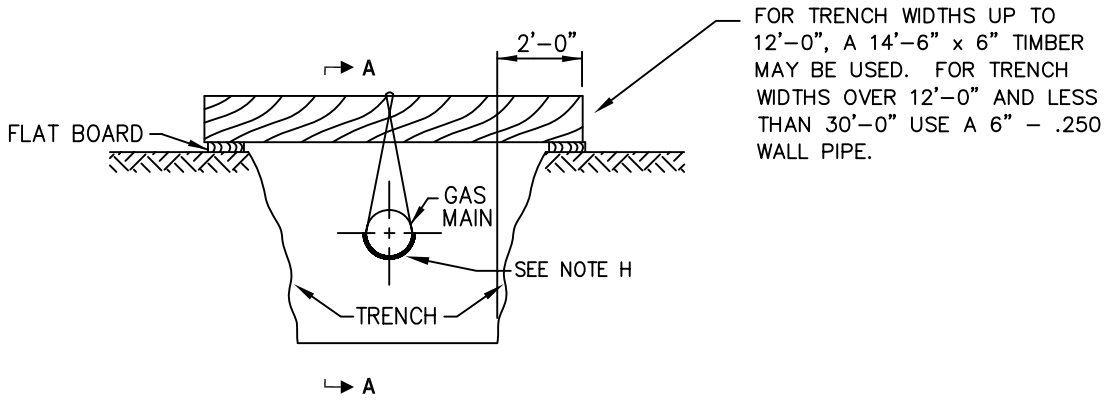

EXPOSED SUPPORT

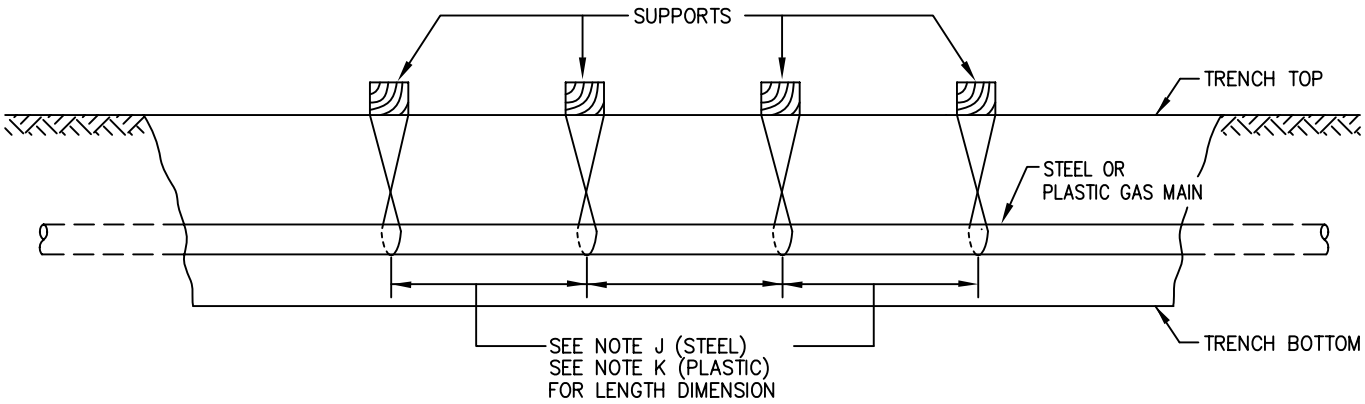

SUPPORTED LENGTH A-A

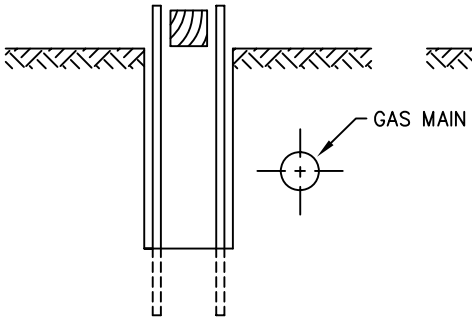

ADEQUATELY SHORED TRENCH

DETAIL A

SEE NOTE B

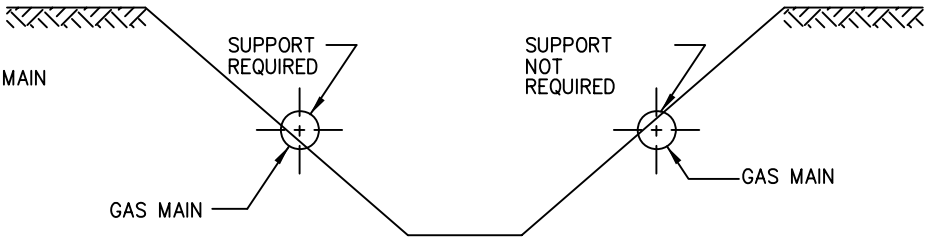

INADEQUATELY SHORED OR UNSHORED TRENCH

DETAIL B

SEE NOTE B

nationalgrid

LI-MA-NH-NYC

SUPPORT REQUIREMENTS FOR EXPOSED & UNDERMINED STEEL OR PLASTIC GAS FACILITIES

REVISIONS CLARIFIED NOTES B & C ADDED NOTE N.

DATE: 07/01/2003	EFFECTIVE DATE: 03/24/2006
DESIGN: A. GIULIANI	STD. DWG. NO. **CNST-6045**
DRAWN: P. DIMAIO	

NOTES:

A. THIS CONSTRUCTION STANDARD SHALL BE USED TO SUPPORT PLASTIC OR STEEL GAS FACILITIES WHICH ARE UNDERMINED AND EXPOSED BY CONSTRUCTION ACTIVITY.

B. IF AN EXCAVATION IS MADE AT ANY DISTANCE PARALLEL TO THE GAS FACILITY WITH ADEQUATE OSHA STRUCTURAL SHORING, AS SHOWN IN DETAIL "A", OR IF A STABLE SOIL CONDITION WITH SUFFICIENT COVER ABOVE THE PIPE'S CENTERLINE EXISTS, AS SHOWN IN DETAIL "B", THEN SUPPORTS ARE NOT REQUIRED. UNSTABLE SOIL IS DEFINED AS A SOIL WHICH CAN CAUSE "SOIL RUN OUT" FROM BENEATH THE PIPE (e.g., WASHOUT, SOFT CLAY, etc.,) OR CAN SHIFT DUE TO CONSTRUCTION ACTIVITY, VIBRATIONS, etc.; AND CAUSE A SOIL SCENARIO TO OCCUR AS SHOWN IN DETAIL "B" TO REQUIRE PIPE SUPPORT.

C. IF AN EXCAVATION CROSSES OR RUNS PARALLEL TO A GAS FACILITY, SUPPORTS MAY NOT BE REQUIRED IF THE EXPOSED SECTION OF PLASTIC PIPES IS 3' OR LESS AND STEEL PIPES 7' OR LESS.

D. ALL EXCAVATIONS SHALL BE PERFORMED IN ACCORDANCE WITH THE REQUIREMENTS OF THE ONE CALL DIG SAFE PROGRAM USING THE APPROPRIATE MARK OUT, TEST HOLES AND EXCAVATION TO AVOID DAMAGE TO PIPE OR PIPE COATINGS:
- NEW YORK STATE CODE RULE 753
- MA CHAPTER 82 - SECTION 40, GENERAL LAWS, REGULATING NOTICE REQUIREMENTS FOR EXCAVATION IN PUBLIC WAYS
- NH DIG SAFE LAW, RSA 374 – REGULATING UNDERGROUND UTILITY DAMAGE PREVENTION SYSTEM

E. USE OF THIS CONSTRUCTION STANDARD DOES NOT RELIEVE THE CONSTRUCTION AGENCY OR AUTHORITY OR THEIR RESPECTIVE CONTRACTORS OF RESPONSIBILITY FOR DAMAGES. ALL DAMAGES WILL BE REPAIRED IN ACCORDANCE WITH EXISTING STANDARDS AND THE APPROPRIATE PARTY SHALL BE BILLED FOR ALL EXPENSES.

F. GAS FACILITIES SHOULD NOT BE UNDERMINED WITHOUT ADEQUATE SUPPORT (DETAIL A). ALL SUPPORT LINES SHALL BE TENSIONED SO THAT NO DEFLECTION WILL OCCUR WHEN THE FACILITY IS UNDERMINED. THIS TENSION SHALL BE CHECKED AT THE START AND END OF EACH DAY AND ADJUSTED AS NECESSARY.

G. WHERE A COUPLING, GAS SERVICE, CLAMP, VALVE, DRIP LINE OR OTHER APPURTENANCE EXISTS ON THE EXPOSED SECTION OF MAIN, AN ADDITIONAL SUPPORT SHALL BE INSTALLED AT THE LOCATION.

H. WHEN SUPPORTING AN EXPOSED FACILITY, THE PIPE COATING SHALL BE PROTECTED WITH ROCK SHIELD (ITEM ID 00301097), OR OTHER LIKE MATERIAL CUT TO A MINIMUM WIDTH OF ½ THE SUPPORTED PIPE DIAMETER. SUPPORT LINES SHALL BE A MINIMUM OF ¾" POLYPROPYLENE OR BETTER.

I. SUPPORTS FOR GAS TRANSMISSION FACILITIES SHALL BE REVIEWED WITH GAS ENGINEERING PRIOR TO INSTALLATION.

J. THE MAXIMUM SPACING BETWEEN SUPPORTS FOR STEEL FACILITIES SHALL BE AS FOLLOWS:
7' SPACING FOR ¾" AND 1 ¼" STEEL
10' SPACING FOR 2" STEEL
15' SPACING FOR 3" AND 4" STEEL
20' SPACING FOR 6" AND LARGER STEEL

K. THE MAXIMUM SPACING BETWEEN SUPPORTS FOR PLASTIC FACILITIES SHALL BE AS FOLLOWS :
3 ' SPACING FOR 2" AND SMALLER PLASTIC
6' SPACING FOR 4" AND LARGER PLASTIC

L. VIBRATING MACHINES ARE ALLOWED OVER STEEL OR PLASTIC FACILITIES WITH 24" OR GREATER COVER. HAND HELD MECHANICAL. TAMPER IS ACCEPTABLE OVER ANY FACILITY WITH 12" OR GREATER COVER.

M. WHEN CONSTRUCTION ACTIVITY IS COMPLETED, CLEAN FILL SHALL BE COMPACTED AROUND AND UNDER THE GAS FACILITY BEFORE REMOVING SUPPORTS.

N. SEE REGIONAL PBWK5010 PROCEDURES FOR **REPLACEMENT** REQUIREMENTS OF CAST IRON PIPE.

No.	**ITEM**	**CODE No.**

BILL OF MATERIAL

4-21 Upper South Providence (Plain St.)

PROVIDENCE WATER

N W E S

0 90 180 360 Feet

RIGIS

Date: 8/18/2020

DISCLAIMER: This map does not represent a legal document. Providence Water makes no warranty, expressed or implied, regarding the accuracy, completeness or usefulnes of information presented. Users of this information assume all liability for its fitness for a particular use.

State of Rhode Island and Providence Plantations Department of Transportation

Minimum Standards for State and Municipal Road Repair for Utility Work

Peter Alviti, Jr., P.E.
Director of Transportation

December 18, 2019

Introduction

This document contains the Rhode Island Department of Transportation (RIDOT) standards for state and municipal roadway repair by public utilities. The standards are produced herein in conformance with Rhode Island General Laws 1956 § 39-2.2-4.

Applicability

These standards reflect the minimum standards of road repair and repaving which must be complied with on any state or municipal owned road which is disturbed for the purposes of performing utility work, in accordance with Rhode Island General Laws 1956 § 39-2.2-4. Road-owning entities may establish stricter standards via their own permitting process.

Definitions

Final pavement restoration - Last phase of the utility work consisting of returning the impacted/disturbed portions of the roadway to the same or better condition that existed prior to the utility work.

Permanent pavement structure trench - Areas/cross sections of the roadway impacted or disturbed by the utility work that require to be rebuilt and restored to full depth from the bottom up, inclusive of backfill, gravel subbase, pavement layers.

Permittee - The party performing the construction work, whether the party named in the permit or its contractor.

Rhode Island Department of Transportation Standard Specifications for Road and Bridge Construction (RIDOT Standard Specifications) - The most recent available document of that same name, published by the Rhode Island Department of Transportation, including all revisions and addendums.

Rhode Island Standard Details – The most recent available document of that same name, published by the Rhode Island Department of Transportation, including all revisions and addendums.

A. General Provisions

1. Where this document or the specifications associated with the utility permit are silent, the road repair and repaving process shall be governed by the RIDOT Standard Specifications.
2. Any property damage caused by construction associated with this process shall be repaired and/or replaced to the satisfaction of the municipality.
3. Restoration of any altered roadway shall commence immediately after the completion of the alteration, and shall include, if necessary, temporary or intermediate restoration on an ongoing basis to keep the roadway smooth and bump free until the permanent restoration can be completed.
4. Spot checks for conformance with the utility permit may include compaction testing, pavement coring, ground penetrating radar, etc. If the permit-issuing entity deems any of the utility work non-conforming, insufficient, defective or incomplete, it is the responsibility of the Permittee to complete the repairs to the satisfaction of the permit issuer.
5. The Permittee will be held responsible for maintaining the final restoration work required under the utility permit for a minimum period of five (5) years starting from the date of acceptance of all work.
6. The RIDOT Hot Mix Asphalt Matrix is incorporated into this document by reference, and shall be applicable to utility permits.
7. The Rhode Island Standard Details is incorporated into this document by reference, and shall be applicable to utility permits.
8. In accordance with the RIDOT Standard Specifications, when the Permittee mills and overlays or otherwise resurfaces an existing roadway that will be open to traffic, and such operations damage existing traffic signal loop detectors, thereby rendering such to be non-functional, the Permittee shall restore properly operating detection within seven (7) calendar days. When existing detection is rendered non-functional by the Permittee's operations for any other reason, the Permittee shall restore properly operating detection within seventy-two (72) hours.

B. In all instances of roadway opening for the purpose of performing utility work, Permittee shall

1. Saw-cut the pavement in straight parallel lines and rectangular in shape with an abrasive wheel power saw, unless otherwise specified. Under no circumstances shall the pavement cut be made using a hammer or drop weight. All pavement cuts shall be full depth through the pavement; and,
2. Backfill in maximum one (1) foot lifts and place at minimum twelve (12) inches of gravel subbase, compacted to RIDOT Standard Specifications.

C. When installing temporary patching on all excavations which will not be permanently restored within the same working day, Permittee shall place a minimum two (2) inch temporary hot mix asphalt pavement patch each day after completion of work in a roadway segment.

D. When performing permanent pavement structure trench restoration
    1. Permittee shall re-sawcut, full depth through the pavement, one (1) foot cutbacks at minimum from all vertical edges of the initial utility work trench(es) prior to installing permanent pavement.
    2. Permittee shall apply asphalt emulsion tack coat to all vertical and horizontal pavement surfaces prior to permanent pavement structure trench restoration.
    3. For state-owned roads, at a minimum, the restored pavement thickness shall match the existing depth of the roadway, or equal six (6) inches, whichever is greater. For non-state-owned roads, at a minimum, the restored pavement thickness shall match the existing depth of the roadway, or equal four (4) inches, whichever is greater.
    4. Class(es) of hot mix asphalt for permanent pavement shall be in accordance with the RIDOT Hot Mix Asphalt Matrix.
    5. If concrete base is present in the roadway, restoration shall include Class XX concrete and dowels, in accordance with the RIDOT Standard Specifications.
    6. The full depth permanent pavement structure trench shall be in place for a minimum thirty (30) calendar days, and for a maximum one (1) year or sooner in accordance with the municipal permit, prior to final pavement restoration.
    7. Permittee shall restore:
        a. Full panels of impacted concrete sidewalk in accordance with RI Standard 43.1.0;
        b. Full panels of impacted concrete driveways in accordance with RI Standard 43.5.0;
        c. Impacted asphalt sidewalk full width in accordance with RI Standard 43.2.0 using Class 4.75 or 9.5 hot mix asphalt;
        d. Impacted asphalt driveways full width using Class 9.5 hot mix asphalt;
        e. Impacted curbing (replace) in kind and reset to original grade; and
        f. Impacted plantable areas with loam and seed.

E. Final pavement restoration shall include:
    1. Two (2) inches of micromilling and resurfacing all impacted travel lanes and/or shoulders for their full width using Class 9.5 or 12.5 hot mix asphalt. Impacted travel lanes and/or shoulders are the roadway pavement areas that the utility work trench(es) are located within. In addition to the roadway pavement areas impacted by the utility work trenches, this final pavement restoration shall also apply to all travel lanes and/or shoulders impacted by either lateral or longitudinal utility work trenches when the trenches are less than or equal to one hundred (100) feet longitudinal from one another, including the sections

between trenches, so that no section(s) of roadway pavement less than or equal to one hundred (100) feet shall remain unpaved. This will provide a continuous final pavement between the utility work trenches.

2. Permittee shall apply asphalt emulsion tack coat to all vertical and horizontal pavement surfaces prior to final resurfacing.
3. Restoring permanent pavement markings in the same locations as originally located with epoxy resin paint, as per the RIDOT Standard Specifications.
4. Permanent epoxy resin pavement markings shall be placed no sooner than two (2) weeks but no later than four (4) weeks from the completion of the paving operation.
5. After final paving, as well as before permanent pavement markings are installed, Permittee shall install temporary waterborne reflectorized pavement markings, placed in the same locations as original markings, on any roadways opened to traffic at the completion of any day's paving operation.

Answers to Frequently Asked Questions:

1) **Q:** Why are you sending us this document.

   A: The recently enacted, "THE RHODE ISLAND UTILITY FAIR SHARE ROADWAY REPAIR ACT," (R.I. General Laws 1956 § 39-2.2) includes a provision that requires "any repaving and repair of a municipal road required by § 39-2.2-2 shall be in accordance with standards promulgated by the director of the department of transportation."

2) **Q:** What is the purpose of this law?

   A: The act requires public utilities to restore roadways which they altered or excavated to the satisfaction of the state or municipality controlling the roadway. It also allows for financial recovery for defective or incomplete work.

3) **Q:** What information is contained in this document.

   A: This document sets the minimum roadway restoration requirements or "standards" that must be met when utility excavation or alteration work is performed in a public roadway. These standards apply to both temporary and permanent restorations.

4) **Q:** Can a Municipality choose to set its own roadway restoration standards in place of these standards.

   A: A Municipality can choose to adopt, or keep in place, additional permit requirements as long as these minimum standards are met or exceeded. This document outlines only the <u>minimum</u> restoration standards for roadway restorations.

5) **Q:** Do these roadway restorations standards differ from RIDOT's permit requirements?

   A: No, they do not differ. However, RIDOT may require that higher restoration standards be met on State owned roadways.

6) **Q:** What role will RIDOT have in the implementation of these standards on a local roadway.

A: RIDOT will have no role in the implementation, oversight, or enforcement of these standards.

7) **Q:** Would a Municipality be in full compliance with the law if it implements these standards.

A: Yes. This document establishes the minimum standards for roadway repair on both state and municipal owned roads following utility work. Municipalities, through their own respective permitting processes, are free to impose requirements that meet or exceed those stated herein. This document does not bear on a Municipality's authority to oversee or enforce roadway repair standards within its jurisdiction.