LAND DEVELOPMENT PLAN
(LDP) SUBMISSION - PRELIMINARY

SITE PLANS

FOR

COPLEY- CHAMBERS II

220 BROAD STREET
A.P. 24, LOT 35
PROVIDENCE,
RHODE ISLAND 02903

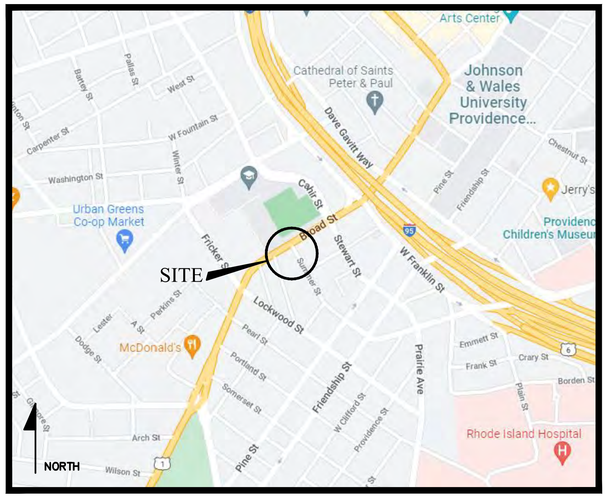

LOCUS MAP
NOT TO SCALE

PREPARED FOR:
MARATHON DEVELOPMENT LLC
580 HARRISON AVENUE, SUITE 3 AA
BOSTON, MA 02118

PREPARED BY:

GAROFALO
GAROFALO & ASSOCIATES, INC.
CIVIL & STRUCTURAL ENGINEERS\SURVEYORS
LAND PLANNERS\ENVIRONMENTAL SCIENTISTS
P.O. BOX 6145 PROVIDENCE, R.I. 02940
1-401-273-6000

JOB NO. 7366-00

DATE: JULY, 2022

SHEET INDEX

SHEET	PLAN TITLE	LATEST REVISION
-	COVER	-
G-1	VICINITY MAP	-
G-2	DEVELOPMENT OVERALL PLAN	-
C-1	GENERAL NOTES & LEGEND	-
C-2	DEMOLITION PLAN	-
C-3	SITE LAYOUT PLAN	-
C-4	GRADING, DRAINAGE & UTILITIES PLAN	-
C-5	SOIL EROSION & SEDIMENTS CONTROL PLAN	-
C-6	CONSTRUCTION DETAILS - 1	-
C-7	CONSTRUCTION DETAILS - 2	-
C-8	CONSTRUCTION DETAILS - 3	-
L-1	LANDSCAPE PLAN	-
L-2	LANDSCAPE DETAILS	-

INFORMATIONAL PLANS:

1	EXISTING CONDITIONS SURVEY (A.P. 24 LOTS 35 & 36)

SAMUEL S. HEMENWAY
No. 6349
REGISTERED PROFESSIONAL ENGINEER
07.18.22

COPLEY - CHAMBERS II
VICINITY MAP
FOR
COPLEY- CHAMBERS II &
COPLEY - CHAMBERS III
SITUATED AT
220/228 BROAD STREET
PROVIDENCE, RI
PREPARED FOR
MARATHON DEVELOPMENT LLC

NO.	REVISION	BY	DATE

GAROFALO & ASSOCIATES, INC.
CIVIL & STRUCTURAL ENGINEERSISURVEYORS
LAND PLANNERSIENVIRONMENTAL SCIENTISTS

85 CORLISS STREET
P.O. BOX 6145
PROVIDENCE, R.I. 02940
TEL. 401-273-6000

Garofalo & Associates ©
These drawings are the property of the engineer/surveyor and have been prepared for the owner, for this particular project and are not to be used for any other purpose, location or owner without written consent of this owner or one of its directors.

JOB NO. 7366-00	DRAWN BY K.Y.Y.
DWG. NO. 7344-00-Vicinity Map.dwg	CHECK BY S.S.H.
SCALE: AS SHOWN	APPROVED S.B.G.
	DATE: JULY 11, 2022

SHEET

G-1

L:\7366-00 220 Broad Street (Marathon) - Providence, RI\dwg\01-Current\7366-00-VICINITY MAP.dwg 07/14/2022 kyingyang 14:42

SHEET NOTES:

1. THIS PLAN IS SCHEMATIC ONLY AND INTENDED TO PROVIDE GENERAL DEVELOPMENT CONDITIONS. SEE SITE PLANS FOR FINAL LAYOUT.
2. RENOVATION AT 206 BROAD ST (COPLEY–CHAMBERS; PHASE I) HAVE BEEN PERMITTED SEPARATED AND IS DEPICTED FOR INFORMATIONAL PURPOSES ONLY.
3. SEE SITE PLANS FOR ENLARGEMENT.

COPLEY - CHAMBERS III

MAJOR LAND DEVELOPMENT
PRELIMINARY PLAN STAGE

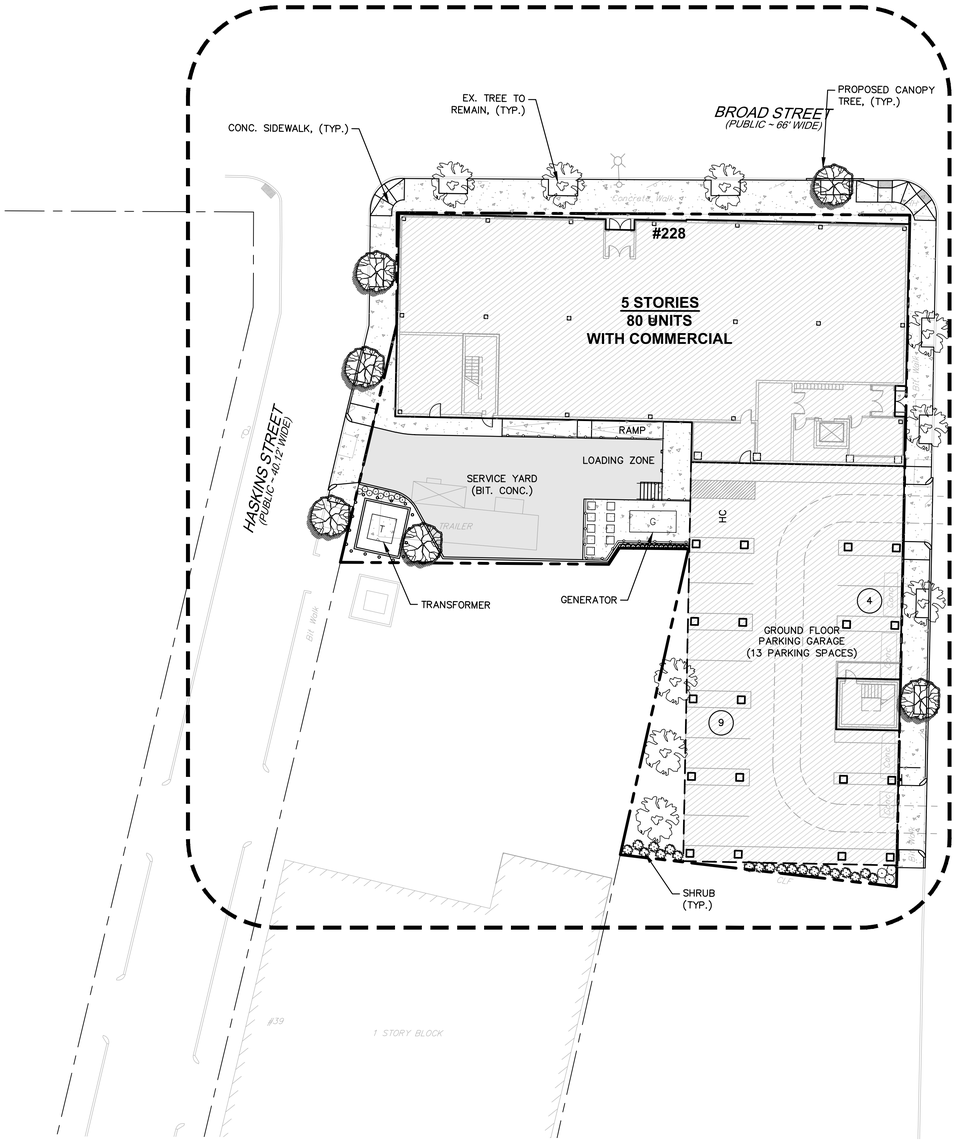

COPLEY - CHAMBERS II

MINOR LAND DEVELOPMENT
PRELIMINARY PLAN STAGE

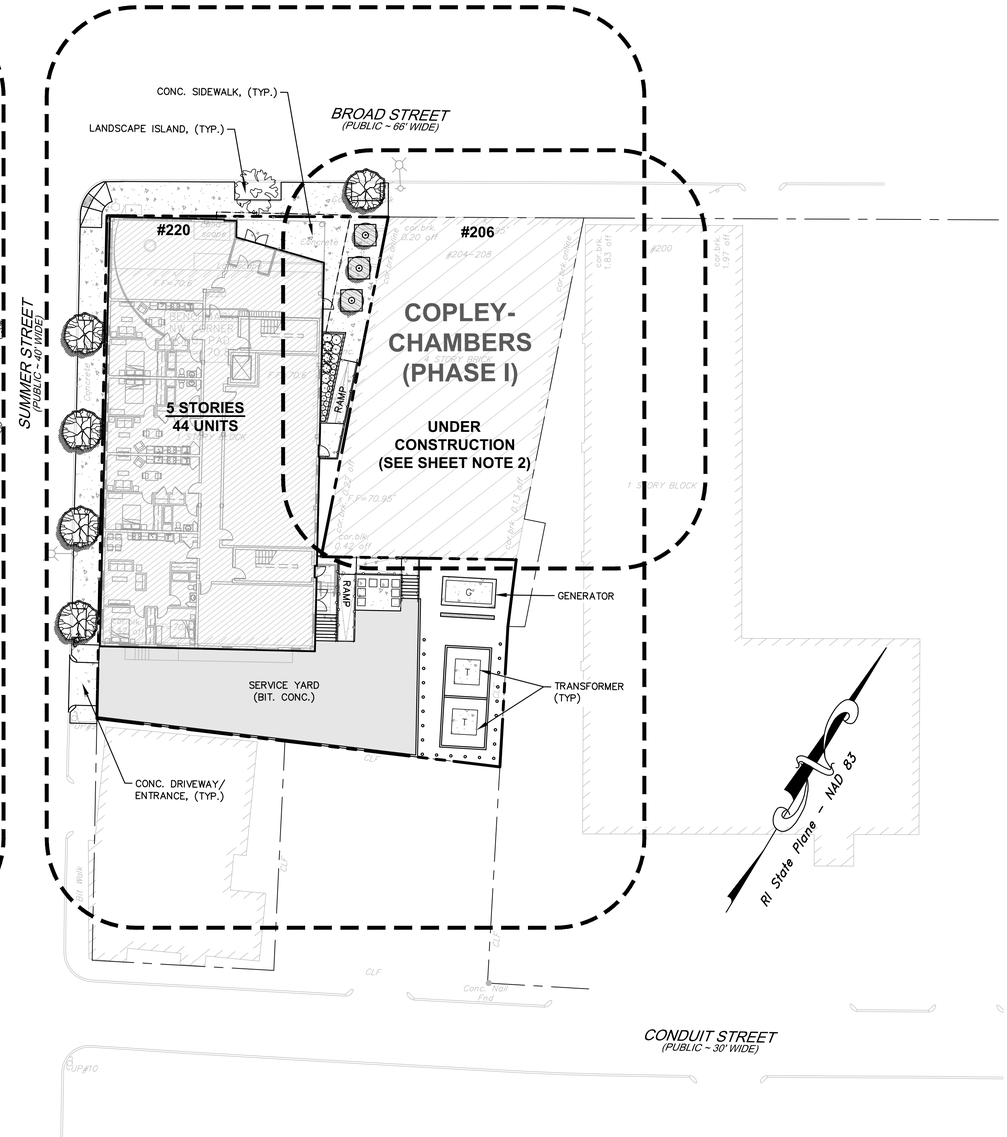

1" = 20'

COPLEY - CHAMBERS II
DEVELOPMENT
OVERALL PLAN
FOR
COPLEY- CHAMBERS II &
COPLEY - CHAMBERS III
SITUATED AT
220/228 BROAD STREET
PROVIDENCE, RI
PREPARED FOR
MARATHON DEVELOPMENT LLC

NO.	REVISION	BY	DATE

GAROFALO & ASSOCIATES, INC.
CIVIL & STRUCTURAL ENGINEERS|SURVEYORS
LAND PLANNERS|ENVIRONMENTAL SCIENTISTS

85 CORLISS STREET
P.O. BOX 6145
PROVIDENCE, R.I. 02940
TEL. 401-273-6000

Garofalo & Associates ©
These drawings are the property of the engineer/surveyor and have been prepared for the owner, for this project, at this time and are not to be used for any other purpose, location or owner without written consent of this owner or one of its directors.

JOB NO. 7366–00	DRAWN BY K.Y.Y.
DWG. NO. 7344–00–Base.dwg	CHECK BY S.S.H.
SCALE: AS SHOWN	APPROVED S.B.G.
	DATE: JULY 11, 2022

SHEET

G-2

L:\7366-00 220 Broad Street (Marathon) – Providence, RI\dwg\01-Current\7366-00-BASE.dwg 07/18/2022 kyingyong 14:09

GENERAL CONSTRUCTION NOTES:

1. AN APPROVED SET OF PLANS AND ALL APPLICABLE PERMITS MUST BE AVAILABLE AT THE CONSTRUCTION SITE TRAILER AT ALL TIMES. DEVIATIONS OR CHANGES WILL NOT BE ALLOWED UNLESS BY WRITTEN APPROVAL FROM THE ENGINEER.

2. SITEWORK CONSTRUCTION SHALL NOT COMMENCE UNTIL ALL APPROVALS HAVE BEEN SECURED. REQUIRED PERMITS/APPROVALS FOR THE PROJECT INCLUDE BUT NOT LIMITED TO THE FOLLOWING: DEVELOPMENT PLAN APPROVAL BY THE CITY OF PROVIDENCE, DPW PHYSICAL ALTERATION PERMIT, NBC (NARRAGANTSETT BAY COMMISSION) SEWER CONNECTION, PROVIDENCE WATER SERVICE CONNECTION.

3. ALL IMPROVEMENTS MUST COMPLY WITH THE 'AMERICANS WITH DISABILITIES ACT ACCESSIBILITY GUILDELINES (ADAAG)'. NOTE THAT THE DETAIL CONTAINED WITHIN THIS PLAN MAY NOT SHOW THE DETAIL NECESSARY TO CONTSTRUCT WALKWAYS, RAMPS AND SPACES TO COMPLY WITH THE ADAAG REQUIREMENTS BUT THE CONTRACTOR IS REPOSNSIBLE TO PROVIDE THE LEVEL OF CARE NECESSARY TO BE CERTAIN THAT THE CONSTRUCTED PRODUCT MEETS THESE STANDARDS.

4. THE CONTRACTOR MUST RETAIN THE SERVICES OF A REGISTERED LAND SURVEYOR IN THE STATE OF RHODE ISLAND TO LAYOUT ON THE GROUND ALL NEW ELEMENTS OF WORK. IF ANY WORK IS INSTALLED PRIOR TO THE ABOVE REQUIREMENT AND IF ANY WORK IS NOT SATISFACTORY TO THE ENGINEER, THE CONTRACTOR MUST REPLACE THE WORK AT NO ADDITIONAL COST TO THE OWNER.

5. THE CONTRACTOR SHALL VERIFY THE PROPOSED LAYOUT WITH ITS RELATIONSHIP TO THE EXISTING SITE SURVEY. THE CONTRACTOR SHALL VERIFY ALL DIMENSIONS, SITE CONDITIONS AND MATERIAL SPECIFICATIONS AND SHALL NOTIFY THE OWNER AND ENGINEER OF ANY ERRORS, OMISSIONS OR DISCREPANCIES BEFORE COMMENCING, INSTALLING OR PROCEEDING WITH WORK.

6. IT IS THE RESPONSIBILITY OF THE CONTRACTOR TO DETERMINE THE LOCATION OF ALL EXISTING UNDERGROUND UTILITIES AND TO TAKE WHATEVER NECESSARY MEASURES NEEDED TO PROVIDE FOR THEIR PROTECTION. THE ENGINEER HAS DILIGENTLY ATTEMPTED TO LOCATE AND INDICATE ALL EXISTING UNDERGROUND UTILITIES AND FACILITIES ON THE DRAWINGS; HOWEVER, THE INFORMATION SHOWN IS FOR THE CONTRACTORS CONVENIENCE ONLY. THE ENGINEER ASSUMES NO RESPONSIBILITY FOR THE LOCATIONS OF UTILITIES SHOWN OR NOT SHOWN. THE CONTRACTOR SHALL MAKE EXPLORATORY EXCAVATIONS AND LOCATE ANY EXISTING UTILITIES SUFFICIENTLY AHEAD OF CONSTRUCTION, VERIFY ALL DIMENSIONS, SITE CONDITIONS AND MATERIALS. THE CONTRACTOR MUST CONTACT THE LOCAL UTILITY COMPANIES FOR EXACT LOCATION OF UTILITIES PRIOR TO THE START OF ANY CONSTRUCTION AND SHALL NOTIFY THE ENGINEER OF ANY DISCREPANCIES BEFORE START OF ANY WORK. IT IS THE SOLE RESPONSIBILITY OF THE CONTRACTOR TO REPAIR AND REPLACE ANY AND ALL DAMAGE MADE TO UTILITIES BY THE CONTRACTOR.

7. THE CONTRACTOR MUST NOTIFY OPERATORS WHO MAINTAIN UNDERGROUND UTILITIES IN THE AREA OF PROPOSED CONSTRUCTION, EXCAVATION OR BLASTING AT LEAST THREE WORKING DAYS, BUT NOT MORE THAN TEN WORKING DAYS PRIOR TO THE START OF ANY CONSTRUCTION, EXCAVATION OR BLASTING. ALL WATER, SEWER, GAS AND ALL OTHER UTILITIES MUST BE MAINTAINED AT ALL TIMES DURING CONSTRUCTION.

8. METHODS AND MATERIALS USED IN THE CONSTRUCTION OF IMPROVEMENTS SHALL CONFORM TO THE CURRENT CONSTRUCTION STANDARDS AND SPECIFICATIONS FOR THE CITY OF PROVIDENCE AND THE STATE OF RHODE ISLAND DEPARTMENT OF TRANSPORTATION. THE STATE OF RHODE ISLAND STANDARD SPECIFICATIONS FOR ROAD AND BRIDGE CONSTRUCTION, 2004 EDITION, AS AMENDED, AND THE RHODE ISLAND STANDARD DETAILS ARE MADE A PART HEREOF, AS IF ATTACHED HERETO.

9. THE CONTRACTOR IS RESPONSIBLE FOR REPLACING ANY PAVEMENT, DRIVEWAYS, SIDEWALKS, WALL, CURBS, ETC. DAMAGED DURING CONSTRUCTION WITH MATCHING MATERIALS.

10. THE CONTRACTOR AGREES THAT HE WILL ASSUME SOLE AND COMPLETE RESPONSIBILITY FOR THE PROJECT SITE CONDITIONS THROUGHOUT CONSTRUCTION. INCLUDING SAFETY OF ALL PERSONS AND PROPERTY. THIS REQUIREMENT WILL APPLY CONTINUOUSLY AND NOT BE LIMITED TO NORMAL WORKING HOURS AND THAT THE CONTRACTOR SHALL DEFEND, INDEMNIFY AND HOLD THE OWNER AND THE ENGINEER HARMLESS FROM ANY AND ALL LIABILITY, REAL OR ALLEGED IN CONJUNCTION WITH THE PERFORMANCE OF WORK ON THIS PROJECT.

11. ALL MATERIALS USED FOR CONSTRUCTION MUST BE NEW AND FREE OF DEFECTS. USED OR SALVAGED MATERIAL WILL NOT BE ALLOWED UNLESS WRITTEN APPROVAL FROM THE OWNER IS OBTAINED BY THE CONTRACTOR.

12. AT ALL TIME THE CONTRACTOR MUST MAINTAIN ACCESS FOR EMERGENCY VEHICLES AROUND AND TO ALL BUILDINGS. (I.E. IN TIMES OF RAIN OR SNOW, ROADS MUST ABLE TO CARRY A FIRE TRUCK BY BEING PAVED OR HAVING A CRUSHED STONE BASE, ETC.). WIDTH OF EMERGENCY VEHICLE ACCESS MUST BE A MINIMUM OF 20 FEET WIDE. ACCESS TO BUILDINGS THAT HAVE A FIRE SPRINKLER SYSTEM OR STANDPIPE MUST BE WITHIN 40 FEET OF THE FIRE DEPARTMENT CONNECTION (FDC). NFPA 1141 3-1.

13. NECESSARY BARRICADES, LIGHTS, SIGNS AND OTHER TRAFFIC CONTROL METHODS AS MAYBE NECESSARY FOR THE PROTECTION AND SAFETY OF THE PUBLIC MUST BE PROVIDED AND MAINTAINED THROUGHOUT CONSTRUCTION BY THE CONTRACTOR. ALL TRAFFIC CONTROL SHALL CONFORM TO THE MANUAL ON UNIFORM TRAFFIC CONTROL DEVICES 2003 INCLUDING ALL REVISIONS.

14. LIGHTING FACILITIES MUST BE SO ARRANGED THAT THE SOURCE OF ANY LIGHT IS CONCEALED FROM PUBLIC VIEW AND FROM ADJACENT RESIDENTIAL PROPERTY AND DOES NOT INTERFERE WITH TRAFFIC. (REFER TO ELECTRICAL SITE PLANS PREPARED BY OTHERS FOR EXTERNAL LIGHTING DETAILS.)

15. ALL RI HIGHWAY BOUNDS AND PERMANENT SURVEY MARKERS SHALL BE PROTECTED THROUGHOUT CONSTRUCTION.

16. REFER TO ARCHITECTURAL, STRUCTURAL, AND MECHANICAL PLANS FOR ALL BUILDING INFORMATION.

17. ALL CURB RADII ARE 3' UNLESS OTHERWISE NOTED ON THE SITE PLAN.

18. PRIOR TO THE START OF CONSTRUCTION THE CONTRACTOR IS REQUIRED TO DEVELOP AND IMPLEMENT A PLAN FOR THE TEMPORARY CONTROL OF VEHICULAR AND PEDESTRIAN TRAFFIC FOR WORK WITHIN PUBLIC STREET RIGHT-OF-WAY AT THE SITE EGRESS. CONTRACTOR SHALL OBTAIN APPROVAL OF SAID PLAN FROM APPROPRIATE STATE AND COMMUNITY PUBLIC SAFETY OFFICIALS.

19. WHEN IT IS NECESSARY TO CLOSE OFF A STREET, THE FIRE DEPARTMENT AND POLICE DEPARTMENT SHALL BE NOTIFIED BY THE CONTRACTOR.

20. PRECAST STRUCTURES MAY BE USED AT CONTRACTOR'S OPTION. SHOP DRAWINGS OF PRECAST STRUCTURES SHALL BE REVIEWED BY THE ENGINEER AND APPROVED BEFORE USE.

21. IF ANY EXISTING STRUCTURES AND/OR UTILITIES TO REMAIN ARE DAMAGED DURING CONSTRUCTION, EITHER ON THE PROJECT SITE, ADJACENT PROPERTIES, OR WITHIN STATE RIGHT-OF-WAY, IT SHALL BE THE CONTRACTORS RESPONSIBILITY TO REPAIR AND/OR REPLACE THE EXISTING STRUCTURE AS NECESSARY TO RETURN IT TO EXISTING CONDITIONS OR BETTER.

GENERAL UTILITY NOTES:

1. THE CONTRACTOR SHALL NOTIFY DIG-SAFE (1-888-344-7233) AND ALL LOCAL AUTHORITIES & UTILITY COMPANIES TO VERIFY LOCATIONS OF UTILITIES WITHIN THE AREA 72 HOURS PRIOR TO BEGINNING ANY EXCAVATION OR DEMOLITION FOR THE PURPOSE OF COORDINATING THE MARKING OF UNDERGROUND UTILITIES. LOCATION AND DEPTHS OF EXISTING UTILITIES SHOWN ARE APPROXIMATE ONLY. THE CONTRACTOR SHALL BE RESPONSIBLE VERIFY, LOCATE AND PROTECT EXISTING UTILITIES IN THE FIELD WHETHER OR NOT SHOWN ON THE DRAWINGS.

2. ALL WORK SHALL BE IN COMPLETE ACCORDANCE WITH ALL APPLICABLE STATE, FEDERAL AND LOCAL CODES, AND ALL NECESSARY LICENSES AND PERMITS SHALL BE OBTAINED BY THE CONTRACTOR AT HIS EXPENSE UNLESS PREVIOUSLY OBTAINED BY THE OWNER/DEVELOPER. THE CONTRACTOR SHALL REFER TO THE PROVIDENCE WATER RULES & REGULATIONS FOR THE SERVICE INSTALLATION & EXTENSION REQUIREMENTS OF WATER LINES.

3. THE CONTRACTOR SHALL COORDINATE LOCATION AND INSTALLATION OF ALL UNDERGROUND UTILITIES AND APPURTENANCES TO MINIMIZE DISTURBANCE OF CURBING, PAVING AND COMPACTED SUBGRADE, THE CONTRACTOR SHALL NOTIFY THE TOWN ENGINEER & ALL LOCAL UTILITY COMPANIES 48 HOURS BEFORE EACH PHASE OF CONSTRUCTION. THE CONTRACTOR SHALL IMMEDIATELY INFORM THE ENGINEER OF ANY DISCREPANCIES OR ERRORS DISCOVERED IN THE PLANS.

4. BEDDING REQUIREMENTS SPECIFIED HEREIN ARE TO BE CONSIDERED AS MINIMUMS FOR RELATIVELY DRY, STABLE EARTH CONDITIONS. ADDITIONAL BEDDING SHALL BE REQUIRED FOR ROCK TRENCHES AND WET AREA. CONTRACTOR SHALL HAVE THE RESPONSIBILITY TO PROVIDE SUCH ADDITIONAL BEDDING AS MAY BE REQUIRED TO PROPERLY CONSTRUCT THE WORK.

5. THE CONTRACTOR SHALL REMOVE ANY ABANDONED FOUNDATIONS, UTILITY STRUCTURES, BURIED DEBRIS ETC. WHICH INTERFERE WITH THE INSTALLATION OF THE UTILITY WORK. ALL SUCH STRUCTURES SHALL BE COMPLETELY REMOVED AND THE EXCAVATED AREA SHALL BE BACKFILLED WITH COMPACTED GRAVEL IN 6" LIFTS TO 95% COMPACTION TO 6" BELOW THE BOTTOM OF THE UTILITY AND PIPE.

6. COMPACTION OF THE BACKFILL OF ALL TRENCHES SHALL BE COMPACTED TO THE DENSITY OF 95% OF THE THEORETICAL MAXIMUM DRY DENSITY (ASTM D698). BACKFILL MATERIAL SHALL BE FREE FROM ROOTS, STUMPS OR OTHER FOREIGN DEBRIS AND SHALL BE PLACED IN LIFTS NOT TO EXCEED ONE FOOT IN COMPACTED FILL THICKNESS. CORRECTION OF ANY TRENCH SETTLEMENT WITHIN A YEAR FROM THE DATE OF PROJECT APPROVAL WILL BE THE RESPONSIBILITY OF THE CONTRACTOR.

7. ALL PIPING LAYOUT INDICATED ON THESE PLANS IS DIAGRAMMATIC ONLY AND DOES NOT SHOW ALL THE REQUIRED FITTINGS FOR PROPER ALIGNMENT. THE CONTRACTOR SHALL PROVIDE ALL REQUIRED FITTINGS TO OBTAIN PROPER ALIGNMENT AND FOR EXISTING UTILITY CONNECTIONS BASED UPON FIELD CONDITIONS.

8. IF DURING EXCAVATION THE TRENCH WIDTH EXCEEDS THE SUM OF THE PIPE O.D. PLUS 2'-0", PLACE AND COMPACT THE FILL TO 12" ABOVE THE PIPE AND RE-EXCAVATE TO REQUIRED GRADE.

9. DOMESTIC AND FIRE PROTECTION WATER SERVICE IS PROVIDED TO THE PROPERTY BY THE PROVIDENCE WATER (PW).THE ONSITE WATER SYSTEM ON THE PROPERTY IS PRIVATE WATER PIPING SHALL BE CLASS 52 DOUBLE CEMENT LINED DUCTILE IRON PIPE WITH TYTON JOINTS. ALL BENDS, TEES ETC. SHALL BE JOINT RESTRAINED BY THE USE OF CONCRETE THRUST BLOCKS AND "MEG-A-LUG". ALL MATERIALS AND WORKMANSHIP SHALL CONFORM TO THE PW REGULATIONS, STANDARDS AND SPECIFICATIONS. NOTIFICATION SHALL BE PROVIDED TO SAID AUTHORITIES AT LEAST 72 HOURS PRIOR TO INITIATING CONSTRUCTION. WATER SERVICE PIPING SIZE SHOWN IS APPROXIMATE ONLY AND SHALL BE SIZED AND VERIFIED BY A LICENSED FIRE PROTECTION ENGINEER AND OR LICENSED PLUMBING ENGINEER.

10. GATE VALVES SHALL BE CAST IRON BODY BRONZE MOUNTED, COMPLETE WITH ROAD BOX AND SHALL CONFORM TO THE PW REGULATIONS, STANDARDS AND SPECIFICATIONS.

11. ALL FIRE AND PLUMBING FIXTURES MUST CONFORM TO LOCAL SPECIFICATIONS AND AS STIPULATED BY THE LOCAL FIRE MARSHALL AND/OR THE BUILDING OFFICIAL.

12. ALL SANITARY SEWER MATERIALS AND WORKMANSHIP ASSOCIATED WITH THE INSTALLATION AND TESTING OF SANITARY SEWERS SHALL CONFORM TO THE NARRAGANSETT BAY COMMISSION (NBC) AND CITY OF PROVIDENCE ENGINEERING DIVISION REGULATIONS STANDARDS AND SPECIFICATIONS. ALL SEWER SYSTEM COMPONENTS MUST BE TESTED, CLEANED AND AS-BUILT INFORMATION MUST BE SUBMITTED TO THE CITY OF PROVIDENCE AND APPROVED, PRIOR TO ISSUANCE OF A PERMIT TO CONNECT TO PUBLIC SEWER SYSTEM.

13. SANITARY SEWER MAINS AND SERVICES SHALL BE SDR-35 (ASTM D-3034) PVC SEWER PIPE WITH PUSH ON RUBBER RING JOINTS UNLESS NOTED OTHERWISE. CLEANOUTS SHALL BE INSTALLED AT BUILDING FACE (REFER PLUMBING PLANS FOR ALL WORK WITHIN 5' OF THE BUILDING). NEOPRENE COUPLINGS WITH STAINLESS STEEL BAND AND SHEER RINGS SHALL BE REQUIRED FOR JOINING DIFFERENT TYPES OF SANITARY SEWER PIPES.

14. SEWER LINES SHALL BE INSTALLED AT A MINIMUM 10 FOOT HORIZONTAL SEPARATION FROM ANY PROPOSED OR EXISTING WATER LINES.

15. WHENEVER SEWER LINES MUST CROSS WATER LINES, THE SEWER SHALL BE INSTALLED SO THAT THE TOP OF THE SEWER IS AT LEAST 18 INCHES BELOW THE BOTTOM OF THE WATER MAIN. WHERE 18 INCH VERTICAL SEPARATION & 10 FOOT HORIZONTAL SEPARATION CAN NOT BE MET AT WATER AND SEWER CROSSINGS, THE SEWER PIPE SHALL BE ENCASED IN EITHER DUCTILE IRON OR c900 BLUE BRUTE PIPE FOR A DISTANCE OF 10 FEET ON EACH SIDE OF CROSSING.

16. WHENEVER NEW SEWER LINES CONNECT TO EXISTING SEWER MANHOLES THE CONTRACTOR SHALL REBUILD THE EXISTING SEWER MANHOLE CHANNEL TO ACCOMMODATE THE NEW CONNECTION.

17. STORM DRAINS 12" AND OVER SHALL BE SMOOTH INTERIOR WALL AND EXTERIOR CORRUGATED HIGH DENSITY POLYETHYLENE (HDPE) PIPE CAPABLE OF WITHSTANDING (H-20) LOAD UNLESS NOTED OTHERWISE. PIPE SHALL BE JOINED USING BELL & SPIGOT JOINTS MEETING OR EXCEED ASTM F2648. THE JOINT SHALL BE SOIL-TIGHT AND GASKETS SHALL MEET OR EXCEED ASTM F477. HDPE PIPE SHALL BE AS MANUFACTURED BY ADVANCED DRAINAGE SYSTEMS INC. (ADS), HANCOR PIPE OR LANE PIPE. ALL STORM DRAINAGE PIPING SHALL BE LAID ON A SMOOTH CONTINUOUS GRADE WITH NO VISIBLE BENDS AT THE JOINTS. WHERE INDICATED ON DRAWINGS REINFORCED CONCRETE PIPE (RCP) PIPE SHALL BE CLASS III RCP WITH "O" RING GASKET JOINTS.ALL STORM PIPE ENTERING STRUCTURES SHALL BE GROUTED TO ASSURE CONNECTION AT STRUCTURE IS WATERTIGHT. ROOF DRAIN AND STORM DRAINS UNDER 12" SHALL BE SDR-35 (ASTM D-3034) PVC WITH PUSH ON RUBBER RING JOINTS UNLESS NOTES OTHERWISE, OR APPROVED BY ENGINEER.

18. GAS SERVICE FACILITIES SHALL BE DESIGNED BY OTHERS. CONTRACTOR SHALL BE RESPONSIBLE TO COORDINATE UTILITY INSTALLATIONS AS REQUIRED TO ENSURE ADEQUATE GAS SERVICE IS PROVIDED AND SHALL BE RESPONSIBLE FOR ALL INSTALLATION PROCEDURES (TRENCHING, LAYING PIPE, ETC.) AS ARE REQUIRED BY THE GAS COMPANY FOR COMPLETE AND IN PLACE CONSTRUCTION.

19. ELECTRIC SERVICE FACILITIES SHALL BE DESIGNED BY OTHERS. ELECTRIC SERVICE AND TRANSFORMER PAD SHALL CONFORM TO THE REQUIREMENTS OF THE ELECTRIC COMPANY. CONTRACTOR SHALL BE RESPONSIBLE FOR ENSURING ADEQUATE ELECTRIC SERVICE IS PROVIDED AND SHALL BE RESPONSIBLE FOR ALL INSTALLATION PROCEDURES (TRENCHING, LAYING PIPE, ETC.) AS ARE REQUIRED BY THE ELECTRIC COMPANY FOR COMPLETE AND IN PLACE CONSTRUCTION. REFER TO ELECTRICAL DRAWINGS FOR DETAILS ON ALL UNDERGROUND ELECTRIC.

20. TEL/CABLE SERVICE FACILITIES SHALL BE DESIGNED BY OTHERS CONTRACTOR SHALL BE RESPONSIBLE FOR ENSURING ADEQUATE UTILITY SERVICE IS PROVIDED AND SHALL BE RESPONSIBLE FOR ALL INSTALLATION PROCEDURES (TRENCHING, LAYING PIPE ETC.) AS IS REQUIRED BY THE LOCAL UTILITY CO. FOR COMPLETE AND IN PLACE CONSTRUCTION. REFER TO ELECTRICAL DRAWINGS FOR ALL UNDERGROUND ELECTRIC.

21. WHENEVER UTILITIES ARE TO BE INSTALLED WITHIN THE CITY OF PROVIDENCE PUBLIC OR PRIVATE RIGHT OF WAYS, THE TRENCH MUST BE BACKFILLED WITH FLOWABLE FILL. ALL AREAS OF ROADWAY PAVEMENT & WALKWAYS DISTURBED DURING CONSTRUCTION SHALL BE RE-PAVED PER THE CITY OF PROVIDENCE AND STATE STANDARDS AND SPECIFICATIONS.

GENERAL DRAINAGE & GRADING NOTES:

1. MAXIMUM RUNNING SLOPE ALONG ANY SIDEWALK SHALL BE 5%. MAXIMUM CROSS SLOPE ACROSS ANY SIDEWALK SHALL BE 2%. A MINIMUM 5'x5' LANDING MUST BE PROVIDED IN FRONT OF ALL BUILDING ENTRANCES.

2. ALL ADAAG PARKING SAPCES AND LOADING SPACES SHALL BE 2% MAXIMUM SLOPE IN ANY DIRECTION.

3. CONTRACTOR SHALL ASSURE POSITIVE DRAINAGE AWAY FROM BUILDINGS FOR ALL NATURAL AND PAVED AREAS.

4. ALL GRATES AND COVERS IN PAVED AREAS SHALL BE FLUSH WITH PAVEMENT, AND SHALL HAVE TRAFFIC BEARING RING & COVERS. MANHOLES IN UNPAVED AREAS SHALL BE 3" ABOVE FINISH GRADE.

5. CONTRACTOR SHALL ADJUST AND/OR CUT EXISTING PAVEMENT AS NECESSARY TO ASSURE A SMOOTH FIT AND CONTINUOUS GRADE.

6. ALL UNSURFACED AREAS DISTURBED BY GRADING OPERATION SHALL RECEIVE 4 INCHES OF TOPSOIL. CONTRACTOR SHALL APPLY STABILIZATION FABRIC TO ALL SLOPES 3H:1V OR STEEPER. CONTRACTOR SHALL GRASS DISTURBED AREAS IN ACCORDANCE WITH THE CITY OF PROVIDENCE SPECIFICATIONS UNTIL A HEALTHY STAND OF GRASS IS OBTAINED.

STORMWATER SYSTEM MAINTENANCE NOTES:

THE DRAINAGE SYSTEMS ARE TO BE MONITORED THROUGHOUT THE ENTIRE CONSTRUCTION PERIOD BY THE CONTRACTOR. UPON COMPLETION OF THE PROJECT THE CONTRACTOR MUST DO A FINAL FULL MAINTENANCE & CLEAN UP OF THE STORMWATER MANAGEMENT SYSTEM AND THE SITE. UPON COMPLETION OF THE CONTRACTOR'S FINAL MAINTENANCE & CLEAN UP OF THE PROJECT, MONITORING OF THE STORMWATER MANAGEMENT SYSTEM SHALL BE THE RESPONSIBILITY OF THE OWNER.

CONSTRUCTION MONITORING/MAINTENANCE PROCEDURES SHALL BE AS FOLLOWS:
(RESPONSIBILITY OF CONTRACTOR)

1. SILT BARRIER:
   MONITOR SILT BARRIER ON A WEEKLY BASIS AND AFTER EVERY RAIN STORM EVENT AND REPAIR OR REPLACE ANY DAMAGED AREAS IMMEDIATELY. IMMEDIATELY CLEAN THE SILT BARRIER IF SIX INCHES OR MORE OF SEDIMENT HAS ACCUMULATED ON THE HAYBALE & SILT BARRIER.

2. PAVED AREAS:
   PARKING LOTS, PUBLIC & PRIVATE ROADWAYS AND GUTTERS SHALL BE SWEPT CLEAN OF ALL SEDIMENT & DEBRIS. SWEEPING & REMOVAL OF DEBRIS SHALL BE PERFORMED ON A WEEKLY BASIS AT A MINIMUM.

3. CATCH BASINS:
   SILT SACKS SHALL BE INSTALLED ON ALL INLETS IMMEDIATELY AFTER INSTALLATION. ALL CATCH BASINS SHALL BE INSTALLED AS DETAILED AND INSPECTED AFTER EVERY RAIN STORM EVENT. IMMEDIATELY CLEAN THE CATCH BASIN SUMP IF TWO FEET OR MORE OF SEDIMENT HAS ACCUMULATED WITHIN THE CATCH BASIN.

4. DRAIN MANHOLES:
   DRAIN MANHOLES SHALL BE INSTALLED AS DETAILED AND INSPECTED AFTER EVERY RAIN STORM EVENT. IMMEDIATELY CLEAN THE DRAIN MANHOLE IF ONE FOOT OR MORE OF SEDIMENT HAS ACCUMULATED WITHIN THE DRAIN MANHOLE.

5. STORMWATER BMPS:
   NO CONSTRUCTION RUNOFF SHALL BE DIRECTED TO STORMWATER BMPS UNTIL UPGRADIENT AREAS ARE STABILIZED.

POST CONSTRUCTION MONITORING/MAINTENANCE PROCEDURES SHALL BE AS FOLLOWS:
(RESPONSIBILITY OF OWNER)

1. PAVED AREAS:
   PARKING LOTS, ROADS AND ALL ACCESS WAYS AND GUTTERS MUST BE SWEPT CLEAN OF ALL SEDIMENT AND DEBRIS ON BI-ANNUAL BASIS IN SPRING AND FALL OF EACH YEAR. OR AS NECESSARY.

2. CATCH BASINS:
   ALL CATCH BASINS MUST BE INSPECTED AND MAINTAINED ON A BI-ANNUAL BASIS IN MARCH AND OCTOBER OF EACH YEAR. CATCH BASINS MUST BE INSPECTED TO ENSURE THEY HAVE ADEQUATE SUMP CAPACITY, FRAMES AND GRATES ARE NOT DAMAGED, OIL/WATER SEPARATING DEVICES ARE IN PLACE. IMMEDIATELY CLEAN THE CATCH BASIN SUMP IF TWO FEET OR MORE OF SEDIMENT HAS ACCUMULATED WITHIN THE CATCH BASIN.

3. DRAIN MANHOLES:
   ALL DRAIN MANHOLES MUST BE INSPECTED AND MAINTAINED ON A BI-ANNUAL BASIS IN MARCH AND OCTOBER OF EACH YEAR. DRAIN MANHOLES MUST BE INSPECTED TO ENSURE FRAMES AND COVERS ARE NOT DAMAGED AND NO BLOCKAGES HAVE OCCURRED WITHIN THE MANHOLE. IMMEDIATELY CLEAN THE DRAIN MANHOLE IF ONE FOOT OR MORE OF SEDIMENT HAS ACCUMULATED AND NOTIFY ENGINEER FOR EVALUATION.

4. STORMWATER MANAGEMENT FACILITIES – REFER TO OPERATIONS AND MAINTENANCE PLAN UNDER SEPARATE COVER.

SURVEY REFERENCE:

1. THE EXISTING CONDITIONS INDICATED HEREON ARE TAKEN FROM PLAN TITLE "EXISTING CONDITIONS SURVEY" FOR AP 24 LOT 35, SITUATED ON BROAD STREET PROVIDENCE, RHODE ISLAND PREPARED FOR MARATHON DEVELOPMENT, LLC. JOB NUMBER: 7366-00, DWG: 7366-ECS. DATE: FEBRUARY 2022.

SITE PLAN LEGEND (RIDOT):

BCP	BITUMINOUS CONCRETE PAVEMENT 2" CLASS 12.5 HMA SURFACE 3" CLASS 19 HMA BASE 12" GRAVEL BORROW SUBBASE
12"W	12" PAVEMENT MARKINGS-CROSSWALKS & STOP BAR
LS	4" LOAM AND SEEDING, TYPE 2
6.1.0	LIGHT – DUTY ROUND FRAME AND COVER
6.2.1	HEAVY – DUTY ROUND FRAME AND COVER
6.3.2	HIGH CAPACITY FRAME AND GRATE (BICYCLE SAFE)
6.4.0	ROUND FRAME AND GATE
7.1.0	PRECAST CONCRETE CURB
7.3.0	GRANITE CURB
7.6.0	CURB SETTING DETAIL
9.9.0	CONSTRUCTION ACCESSS
20.1.0	PAVEMENT MARKINGS-ARROWS AND ONLY
43.1.0	CEMENT CONCRETE SIDEWALK
43.3.0	WHEELCHAIL RAMP
43.3.1	WHEELCHAIR RAMP FOR LIMITED RIGHT-OF-WAY AREAS
48.1.0	DETECTIBLE WARNING PANEL PLACEMENT

SITE LEGEND

EXISTING	NEW	DESCRIPTION
℄	℄	CENTERLINE (LAYOUT)
D	D	STORM DRAIN
E	E	ELECTRIC (UNDERGROUND)
F	F	FIRE SERVICE
FD	FD	FOOTING DRAIN
G	G	GAS
OHW	OHW	OVERHEAD WIRE
		PROPERTY LINE
S	S	SANITARY SEWER
SL	SL	SITE LIGHTING SERVICE
T	T	TELEPHONE
W	W	WATER
64	64	CONTOUR
x 64.0	x 64.00	SPOT GRADE
x 64.0(BC)	x 64.00(BC)	SPOT GRADE (BOT. OF CURB)
x 64.5(TC)	x 64.50(TC)	SPOT GRADE (TOP OF CURB)
64.5(BW)	64.50(BW)	SPOT GRADE (BOT. OF WALL)
64.5(TW)	64.50(TW)	SPOT GRADE (TOP OF WALL)
BCC	BCC	BITUMINOUS CONC. CURB
CCB	CCB	CAPE COD BERM
PCC	PCC	PRECAST CONC. CURB
PCSMC	PCSMC	PRECAST SLOPED MOUNT. CURB
SGC	SGC	SLOPED GRANITE CURB
VGC	VGC	VERTICAL GRANITE CURB
		CHAINLINK FENCE (CLF)
		STOCKADE FENCE (STKF)
		BORING LOCATION
CB	CB#1	CATCH BASIN
CB(DG)	CBDG#1	DOUBLE GRATE CATCH BASIN
CTB	CTB	CONCRETE THRUST BLOCK
DMH	DMH	DRAIN MANHOLE
FES	FES	FLARED END STRUCTURE
SMH	SMH	SEWER MANHOLE
		WATER SERVICE
		UTILITY POLE
HYD		FIRE HYDRANT
GV	GV	GATE VALVE AND CURB BOX
		HANDICAP SYMBOL (PRKG. SPACE)
		SIGN
		WETLAND
SEV	SEV	SOIL EVALUATION LOCATION
TP	TP	TEST PIT LOCATION
FDC	FDC	FIRE DEPARTMENT CONNECTION
PIV	PIV	POST INDICATOR VALVE (PIV)
E	E	ELECTRIC MANHOLE (EMH)
T	T	TELEPHONE MANHOLE (TMH)
T	T	TRANSFORMER PAD
GEN	GEN	GENERATOR PAD
GCO	GCO	GROUND CLEANOUT
		SIGHT LIGHT POLE
		TRAFFIC FLOW DIRECTION
		COMPOST SILT SOCK
X X	X X	CONTINUOUS ROW OF SILT FENCE
		PAVEMENT SAWCUT & MATCH TO EXISTING
X.X.X	X.X.X	RIDOT STD DETAIL REFERENCE

ABBREVIATIONS

CI	CAST IRON PIPE
CLDI	CEMENT LINED DUCTILE IRON PIPE
CLF	CHAINLINK FENCE
CTE	POINT OF CONNECTION TO EXISTING
D.I.	DUCTILE IRON PIPE
ESHWT	ESTIMATED SEASONAL HIGH WATER TABLE
ETR	EXISTING TO REMAIN
EX.	EXISTING
F&I	FURNISH AND INSTALL
HDPE	HIGH DENSITY POLYETHYLENE PIPE
INV.	INVERT ELEVATION
MTE	MATCH TO EXISTING
NIC	NOT IN CONTRACT
NTS	NOT TO SCALE
PVC	POLYVINYL CHLORIDE PIPE
RCP	REINFORCED CONCRETE PIPE
VIF	VERIFY IN FIELD
WQS	WATER QUALITY STRUCTURE

COPLEY - CHAMBERS II
GENERAL NOTES & LEGEND
FOR
COPLEY- CHAMBERS II &
COPLEY - CHAMBERS III
SITUATED AT
220/228 BROAD STREET
PROVIDENCE, RI
PREPARED FOR
MARATHON DEVELOPMENT LLC

NO.	REVISION	BY	DATE

GAROFALO
GAROFALO & ASSOCIATES, INC.
CIVIL & STRUCTURAL ENGINEERS|SURVEYORS
LAND PLANNERS|ENVIRONMENTAL SCIENTISTS

85 CORLISS STREET
P.O. BOX 6145
PROVIDENCE, R.I. 02940
TEL. 401-273-6000

Garofalo & Associates © These drawings are the property of the engineer/surveyor and have been prepared for the owner, for this project and for other purposes to be used or by other persons at location or owner without written consent of this owner or one of its directors.

JOB NO. 7366-00	DRAWN BY
DWG. NO. 7366-00-Cover.dwg	CHECK BY S.S.H.
SCALE: AS SHOWN	APPROVED S.B.G.
	DATE: JULY 11, 2022

SHEET

C-1

L:\7366-00 220 Broad Street (Marathon) - Providence, RI\dwg\01-Current\7366-00-COVER.dwg 07/18/2022 kyingyang 15:27

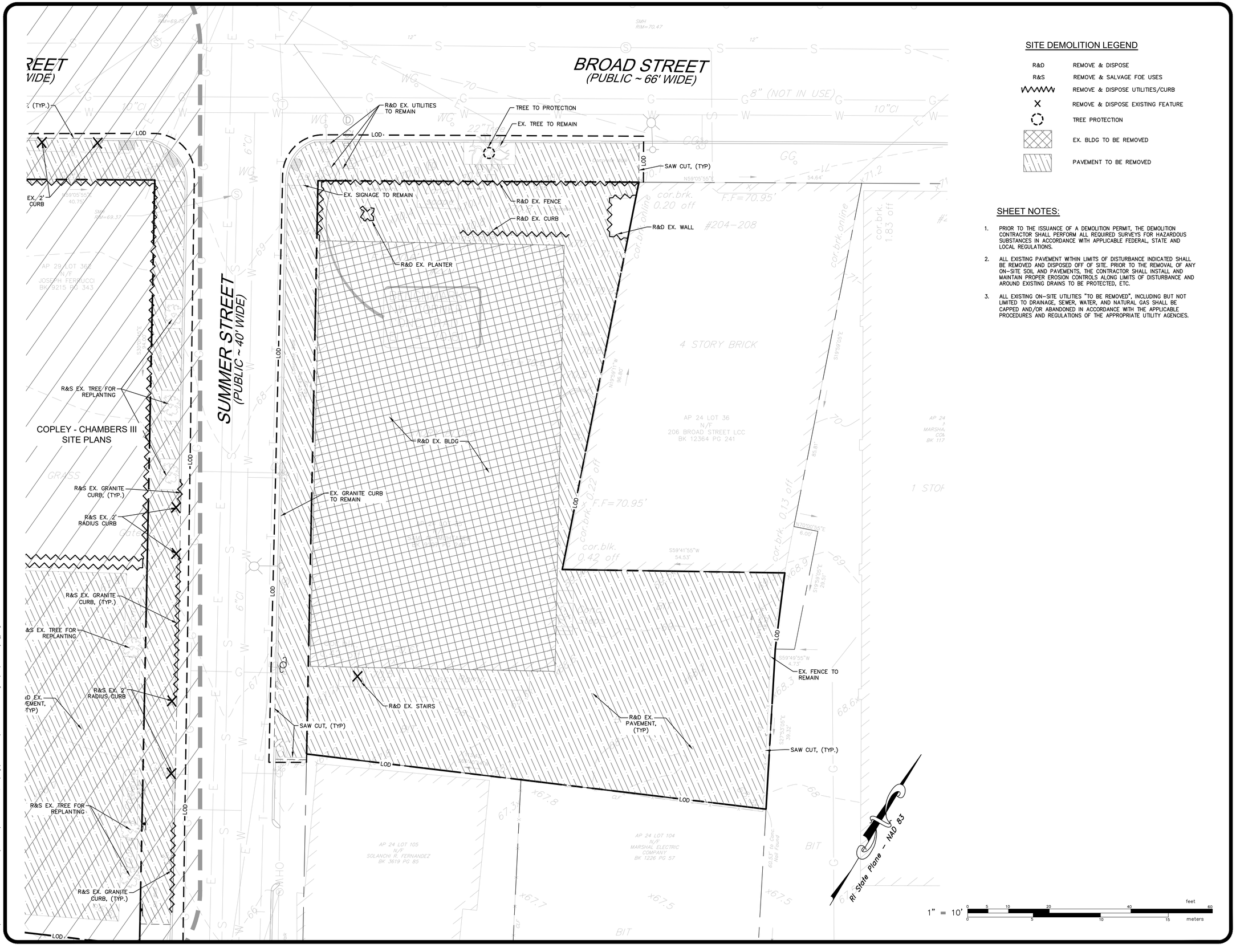

SITE DEMOLITION LEGEND

R&D	REMOVE & DISPOSE
R&S	REMOVE & SALVAGE FOE USES
	REMOVE & DISPOSE UTILITIES/CURB
X	REMOVE & DISPOSE EXISTING FEATURE
	TREE PROTECTION
	EX. BLDG TO BE REMOVED
	PAVEMENT TO BE REMOVED

SHEET NOTES:

1. PRIOR TO THE ISSUANCE OF A DEMOLITION PERMIT, THE DEMOLITION CONTRACTOR SHALL PERFORM ALL REQUIRED SURVEYS FOR HAZARDOUS SUBSTANCES IN ACCORDANCE WITH APPLICABLE FEDERAL, STATE AND LOCAL REGULATIONS.
2. ALL EXISTING PAVEMENT WITHIN LIMITS OF DISTURBANCE INDICATED SHALL BE REMOVED AND DISPOSED OFF OF SITE. PRIOR TO THE REMOVAL OF ANY ON-SITE SOIL AND PAVEMENTS, THE CONTRACTOR SHALL INSTALL AND MAINTAIN PROPER EROSION CONTROLS ALONG LIMITS OF DISTURBANCE AND AROUND EXISTING DRAINS TO BE PROTECTED, ETC.
3. ALL EXISTING ON-SITE UTILITIES "TO BE REMOVED", INCLUDING BUT NOT LIMITED TO DRAINAGE, SEWER, WATER, AND NATURAL GAS SHALL BE CAPPED AND/OR ABANDONED IN ACCORDANCE WITH THE APPLICABLE PROCEDURES AND REGULATIONS OF THE APPROPRIATE UTILITY AGENCIES.

COPLEY - CHAMBERS II
DEMOLITION PLAN
FOR
COPLEY- CHAMBERS II &
COPLEY - CHAMBERS III
SITUATED AT
220/228 BROAD STREET
PROVIDENCE, RI
PREPARED FOR
MARATHON DEVELOPMENT LLC

NO.	REVISION	BY	DATE

GAROFALO & ASSOCIATES, INC.
CIVIL & STRUCTURAL ENGINEERS|SURVEYORS
LAND PLANNERS|ENVIRONMENTAL SCIENTISTS

85 CORLISS STREET
P.O. BOX 6145
PROVIDENCE, R.I. 02940
TEL. 401-273-6000

Garofalo & Associates © These drawings are the property of the engineer/surveyor and have been prepared for the owner, for this project and for this purpose. Re-use of these drawings for any other purpose, location or owner without written consent of this owner or one of its directors.

JOB NO. 7366-00	DRAWN BY R.A.S.
DWG. NO. 7344-00-Base.dwg	CHECK BY S.S.H.
SCALE: AS SHOWN	APPROVED S.B.G.
	DATE: JULY 11, 2022

SHEET

C-2

L:\7366-00 220 Broad Street (Marathon) - Providence, RI\dwg\01-Current\7366-00-BASE.dwg 07/18/2022 kyingyong 15:37

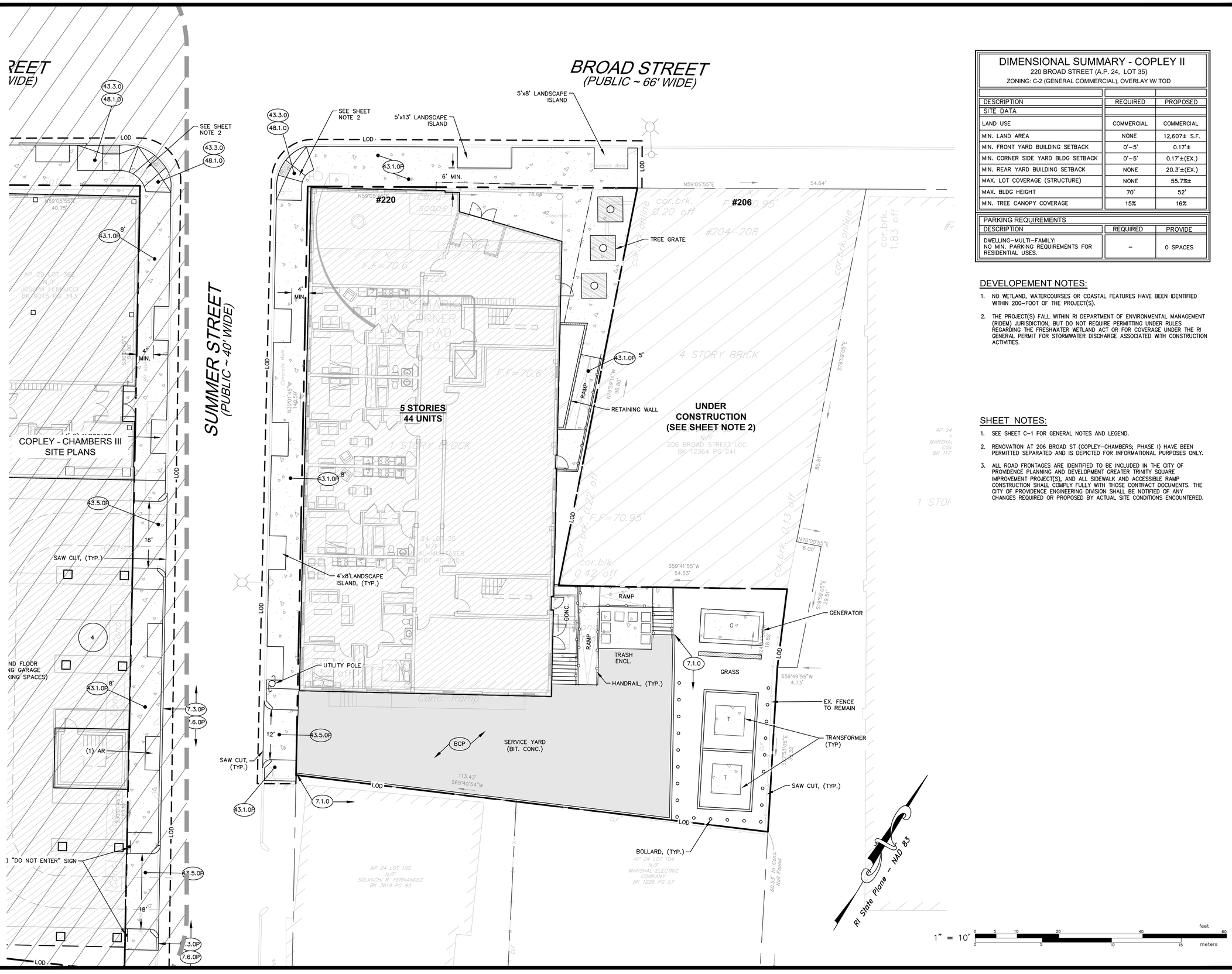

DIMENSIONAL SUMMARY - COPLEY II

220 BROAD STREET (A.P. 24, LOT 35)

ZONING: C-2 (GENERAL COMMERCIAL), OVERLAY W/ TOD

DESCRIPTION	REQUIRED	PROPOSED
SITE DATA		
LAND USE	COMMERCIAL	COMMERCIAL
MIN. LAND AREA	NONE	12,607± S.F.
MIN. FRONT YARD BUILDING SETBACK	0'–5'	0.17'±
MIN. CORNER SIDE YARD BLDG SETBACK	0'–5'	0.17'±(EX.)
MIN. REAR YARD BUILDING SETBACK	NONE	20.3'±(EX.)
MAX. LOT COVERAGE (STRUCTURE)	NONE	55.7%±
MAX. BLDG HEIGHT	70'	52'
MIN. TREE CANOPY COVERAGE	15%	16%

PARKING REQUIREMENTS

DESCRIPTION	REQUIRED	PROVIDE
DWELLING–MULTI–FAMILY: NO MIN. PARKING REQUIREMENTS FOR RESIDENTIAL USES.	–	0 SPACES

DEVELOPEMENT NOTES:

1. NO WETLAND, WATERCOURSES OR COASTAL FEATURES HAVE BEEN IDENTIFIED WITHIN 200–FOOT OF THE PROJECT(S).
2. THE PROJECT(S) FALL WITHIN RI DEPARTMENT OF ENVIRONMENTAL MANAGEMENT (RIDEM) JURISDICTION, BUT DO NOT REQUIRE PERMITTING UNDER RULES REGARDING THE FRESHWATER WETLAND ACT OR FOR COVERAGE UNDER THE RI GENERAL PERMIT FOR STORMWATER DISCHARGE ASSOCIATED WITH CONSTRUCTION ACTIVITIES.

SHEET NOTES:

1. SEE SHEET C–1 FOR GENERAL NOTES AND LEGEND.
2. RENOVATION AT 206 BROAD ST (COPLEY–CHAMBERS; PHASE I) HAVE BEEN PERMITTED SEPARATED AND IS DEPICTED FOR INFORMATIONAL PURPOSES ONLY.
3. ALL ROAD FRONTAGES ARE IDENTIFIED TO BE INCLUDED IN THE CITY OF PROVIDENCE PLANNING AND DEVELOPMENT GREATER TRINITY SQUARE IMPROVEMENT PROJECT(S), AND ALL SIDEWALK AND ACCESSIBLE RAMP CONSTRUCTION SHALL COMPLY FULLY WITH THOSE CONTRACT DOCUMENTS. THE CITY OF PROVIDENCE ENGINEERING DIVISION SHALL BE NOTIFIED OF ANY CHANGES REQUIRED OR PROPOSED BY ACTUAL SITE CONDITIONS ENCOUNTERED.

COPLEY - CHAMBERS II
SITE PLAN
FOR
COPLEY- CHAMBERS II &
COPLEY - CHAMBERS III
SITUATED AT
220/228 BROAD STREET
PROVIDENCE, RI
PREPARED FOR
MARATHON DEVELOPMENT LLC

NO.	REVISION	BY	DATE

GAROFALO & ASSOCIATES, INC.
CIVIL & STRUCTURAL ENGINEERSISURVEYORS
LAND PLANNERSIENVIRONMENTAL SCIENTISTS

85 CORLISS STREET
P.O. BOX 6145
PROVIDENCE, R.I. 02940
TEL. 401-273-6000

Garofalo & Associates © These drawings are the property of the engineer/surveyor and have been prepared for the owner, for this particular site and project only. Not to be used for any other purpose, location or owner without written consent of this owner or one of its directors.

JOB NO. 7366–00	DRAWN BY K.Y.Y.
DWG. NO. 7344–00–Base.dwg	CHECK BY S.S.H.
SCALE: AS SHOWN	APPROVED S.B.G.
	DATE: JULY 11, 2022

SHEET

C-3

L:\7366-00 220 Broad Street (Marathon) – Providence, RI\dwg\01-Current\7366-00-BASE.dwg 07/18/2022 kyingyang 15:21

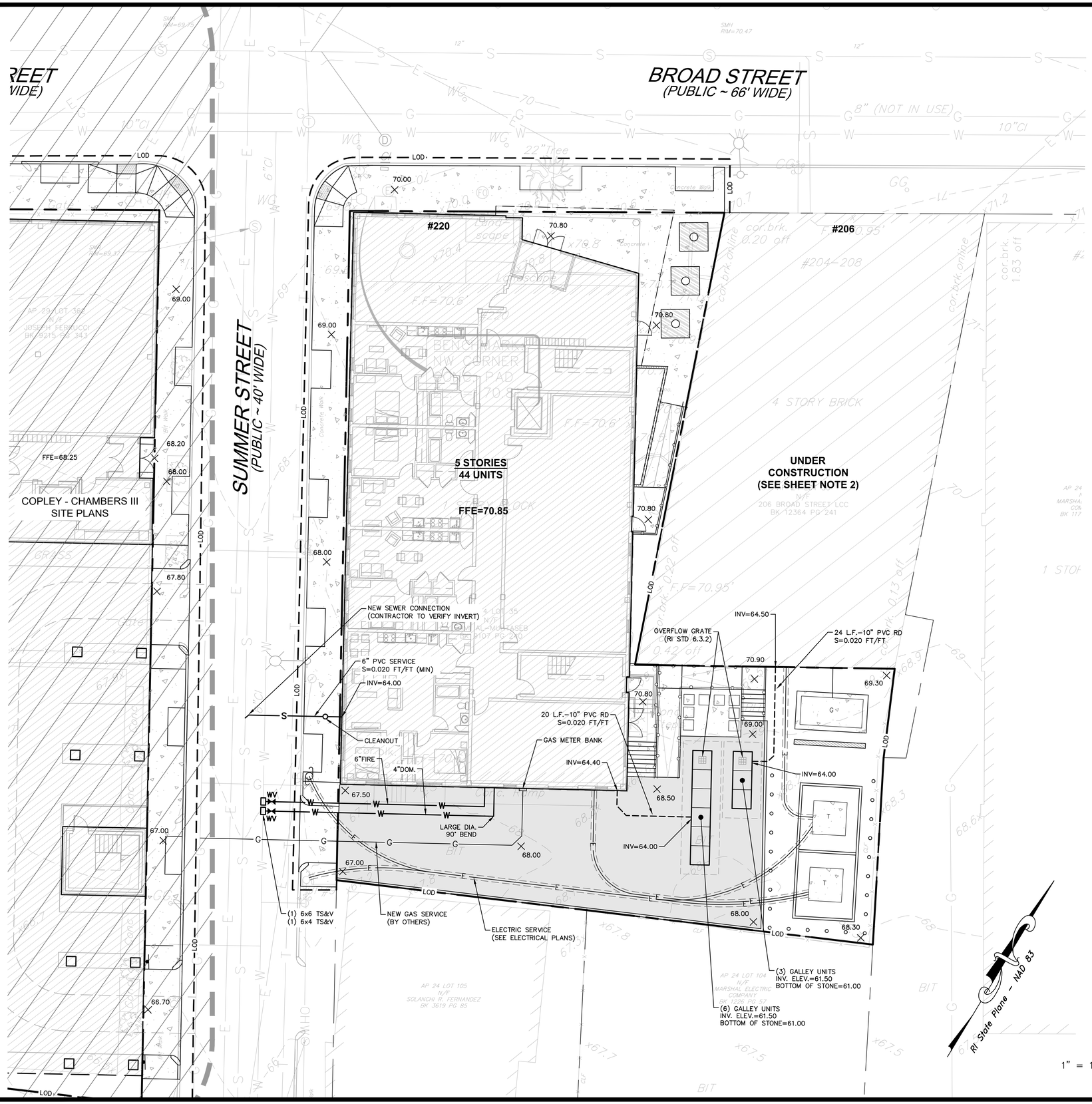

SHEET NOTE:

1. SEE SHEET C-1 FOR GENERAL NOTES AND LEGEND.
2. RENOVATION AT 206 BROAD ST (COPLEY-CHAMBERS; PHASE I) HAVE BEEN PERMITTED SEPARATED AND IS DEPICTED FOR INFORMATIONAL PURPOSES ONLY.

COPLEY - CHAMBERS II
GRADING, DRAINAGE & UTILITIES PLAN
FOR
COPLEY- CHAMBERS II &
COPLEY - CHAMBERS III
SITUATED AT
220/228 BROAD STREET
PROVIDENCE, RI
PREPARED FOR
MARATHON DEVELOPMENT LLC

NO.	REVISION	BY	DATE

GAROFALO & ASSOCIATES, INC.
CIVIL & STRUCTURAL ENGINEERS|SURVEYORS
LAND PLANNERS|ENVIRONMENTAL SCIENTISTS

85 CORLISS STREET
P.O. BOX 6145
PROVIDENCE, R.I. 02940
TEL. 401-273-6000

Garofalo & Associates ©
These drawings are the property of the engineer/surveyor and have been prepared for the owner, for this project only. They are not to be used for any other purpose, location or owner without written consent of this owner or one of its directors.

JOB NO. 7366-00	DRAWN BY R.A.S.
DWG. NO. 7344-00-Base.dwg	CHECK BY S.S.H.
SCALE: AS SHOWN	APPROVED S.B.G.
	DATE: JULY 11, 2022

SHEET

C-4

L:\7366-00 220 Broad Street (Marathon) - Providence, RI\dwg\01-Current\7366-00-BASE.dwg 07/18/2022 kyingyong 15:25

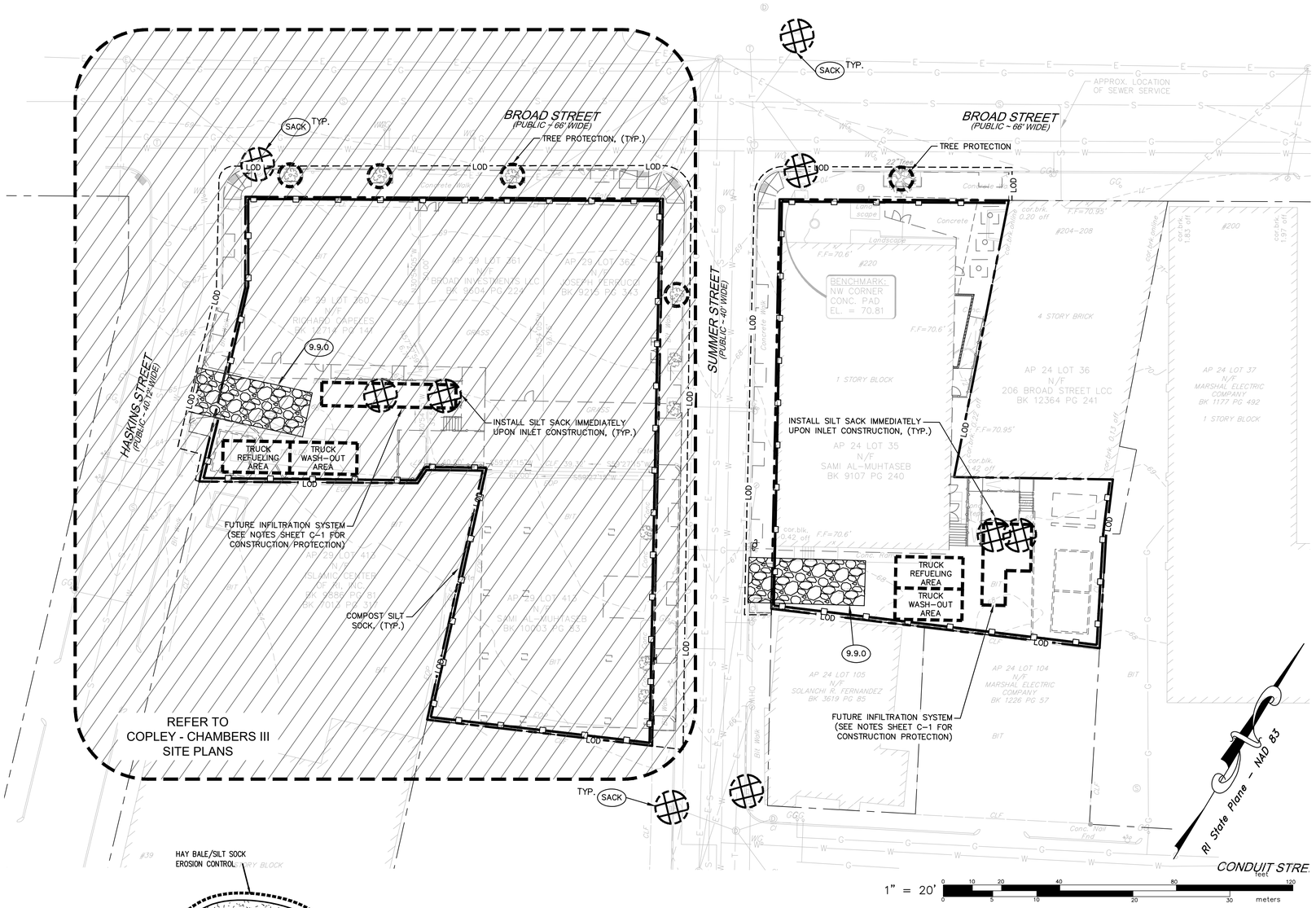

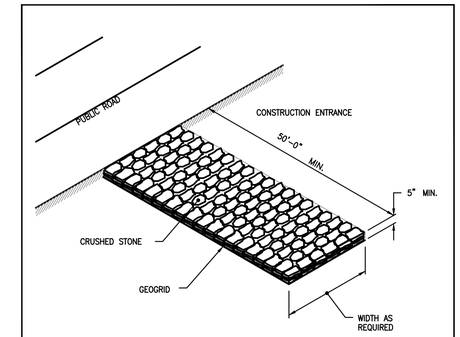

NOTE:
SHALL BE IN ACCORDANCE WITH SECTION 211 OF THE R.I. STANDARD SPECIFICATIONS.

RHODE ISLAND DEPARTMENT OF TRANSPORTATION

REVISIONS			CONSTRUCTION ACCESS	R.I. STANDARD 9.9.0
NO.	BY	DATE		
			CHIEF ENGINEER TRANSPORTATION / CHIEF DESIGN ENGINEER TRANSPORTATION / JUNE 15, 1998 ISSUE DATE	

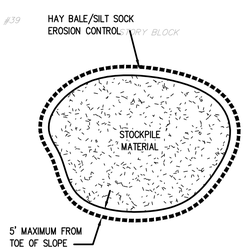

STOCKPILE DETAIL

NOT TO SCALE

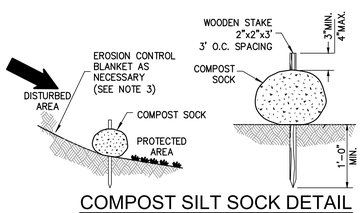

COMPOST SILT SOCK DETAIL

NOT TO SCALE

NOTES:
1. COMPOST SOCK SHALL BE INSTALLED PER MANUFACTURERS RECOMMENDATIONS. COMPOST SOCK SHALL BE A MINIMUM OF 8" IN DIAMETER.
2. COMPOST MATERIAL TO BE DISPERSED ON SITE, AS DETERMINED BY THE ENGINEER.
3. WHEN PLACING COMPOST SOCK ON SLOPES, USE EROSION CONTROL BLANKET IF SPECIFIED ON PLANS.
4. ALWAYS INSTALL COMPOST SOCK PERPENDICULAR TO SLOPE AND ALONG CONTOUR LINES.
5. REMOVE SEDIMENT FROM THE UP SLOPE SIDE OF THE COMPOST SOCK WHEN ACCUMULATION HAS REACHED 1/2 OF THE EFFECTIVE HEIGHT OF THE COMPOST SOCK.
6. WHERE COMPOST SOCK IS INSTALLED ON PAVEMENT SHALL BE ADEQUATELY HIGH AT 8'-0" O.C. MIN.

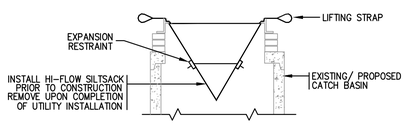

SILTSACK® AT CATCH BASIN DETAIL

NOT TO SCALE

EROSION CONTROL & SOIL STABILIZATION PROGRAM:

1. DENUDED SLOPES SHALL NOT BE LEFT EXPOSED FOR EXCESSIVE PERIODS OF TIME.
2. ALL DISTURBED SLOPES EITHER NEWLY CREATED OR EXPOSED PRIOR TO OCTOBER 15, SHALL BE SEEDED OR PROTECTED BY THAT DATE FOR ANY WORK COMPLETED DURING EACH CONSTRUCTION YEAR.
3. TEMPORARY TREATMENTS SHALL CONSIST OF A HAY, STRAW, OR FIBER MULCH OR PROTECTIVE COVERS SUCH AS A MAT OR FIBER LINING (BURLAP, JUTE, FIBERGLASS NETTING, EXCELSIOR BLANKETS). THEY SHALL BE INCORPORATED INTO THE WORK AS WARRANTED OR AS ORDERED BY THE ENGINEER.
4. HAY OR STRAW APPLICATIONS SHOULD BE IN THE AMOUNT OF 2000 LBS/ACRE.
5. ALL HAYBALES OR TEMPORARY PROTECTION SHALL REMAIN IN PLACE UNTIL AN ACCEPTABLE STAND OF GRASS OR APPROVED GROUND COVER IS ESTABLISHED.
6. THE TOPSOIL SHALL HAVE A SANDY LOAM TEXTURE RELATIVELY FREE OF SUBSOIL MATERIAL, STONES, ROOTS, LUMPS OF SOIL, TREE LIMBS, TRASH OR CONSTRUCTION DEBRIS.
7. THE SEED MIX SHALL BE INOCULATED WITHIN TWENTY FOUR (24) HOURS, BEFORE MIXING AND PLANTING, WITH APPROPRIATE INOCULUM FOR EACH VARIETY.
8. THE DESIGN MIX FOR TEMPORARY EROSION CONTROL AND SOIL STABILIZATION SHALL BE COMPRISED OF THE FOLLOWING:

TYPE	% BY WEIGHT
CREEPING RED FESCUE	70
ASTORIA BENTGRASS	5
BIRDSFOOT TREEFOIL	15
PERENNIAL RYEGRASS	10
APPLICATION RATE	100 LBS/ACRE

LIMING AND FERTILIZING AS REQUIRED TO COMPLIMENT OR UPGRADE EXISTING CONDITIONS.

9. THE CONTRACTOR MUST REPAIR AND/OR RESEED ANY AREAS THAT DO NOT DEVELOP WITHIN THE PERIOD OF ONE (1) YEAR, AND HE SHALL DO SO AT NO ADDITIONAL EXPENSE.
10. THE NORMAL ACCEPTABLE SEASONAL SEEDING DATES ARE APRIL 1ST THROUGH OCTOBER 15TH.
11. STABILIZATION OF ONE FORM OR ANOTHER AS DESCRIBED ABOVE SHALL BE ACHIEVED WITHIN FIFTEEN (15) DAYS OF FINAL GRADING.
12. STOCKPILES OF TOPSOIL SHALL NOT BE LOCATED NEAR WATERWAYS OR FLOOD PLAINS. THEY SHALL HAVE SIDE SLOPES NO GREATER THAN THIRTY PERCENT (30%) AND STOCKPILES SHALL ALSO BE SEEDED AND/OR STABILIZED AND COMPLETELY ENCIRCLED WITH A CONTINUOUS LINE OF STAKED HAYBALES AND/OR SILTFENCE. (SEE DETAIL)
13. ON BOTH STEEP AND LONG SLOPES, CONSIDERATION SHOULD BE GIVEN TO "CRIMPING" OR "TRACKING" TO TACK DOWN MULCH APPLICATIONS.

SEQUENCE AND STAGING OF LAND DISTURBING ACTIVITIES:

1. SURVEY AND STAKE THE DRAINAGE STRUCTURES, LIMIT OF WORK AND SEDIMENTATION BARRIERS.
2. PLACE SEDIMENTATION BARRIERS (SILT SOCK) AS SHOWN ON THE PLANS AND STAKED OUT IN THE FIELD. IN NO CASE IS THE LIMIT OF WORK TO EXTEND BEYOND THE SEDIMENTATION BARRIERS.
3. BEGIN GRADING AND DRAINAGE WORK (CLEARING AND GRUBBING, EXCAVATING AND GRADING, ETC.). TOP SOIL TO BE STRIPPED AND STOCKPILED IN APPROVED AREAS. THE STOCKPILES ARE TO BE PROTECTED BY A ROW OF SEDIMENTATION BARRIER AND COVERED OR TEMPORARILY SEEDED.
4. INSTALL DRAINAGE SYSTEM. INSTALL SEDIMENT PROTECTION IMMEDIATELY AFTER INSTALLATION.
5. COMPLETE SITE GRADING.
6. INSTALL BMPS IN ACCORDANCE WITH PLANS. SEDIMENT CONTROLS SHALL BE MAINTAINED AT THE BMP STRUCTURES UNTIL THE BINDER COURSE OF PAVEMENT IS INSTALLED AND DISTURBED AREAS ARE STABILIZED WITH VEGETATION.
7. COMPLETE LANDSCAPING AND PERMANENT STABILIZATION. SWEEP THE ROADWAY AREAS TO REMOVE ALL SEDIMENTS.
8. FLUSH AND/OR REPAIR DRAINAGE AREAS AS NEEDED.
9. REMOVE ALL TEMPORARY SOIL EROSION AND SEDIMENTATION CONTROL MEASURES FOLLOWING VEGETATIVE ESTABLISHMENT OF ALL DISTURBED AREAS.

SEDIMENTATION CONTROL PROGRAM:

1. EXTREME CARE SHALL BE EXERCISED SO AS TO PREVENT ANY SEDIMENTS FROM ENTERING THE STATE HIGHWAY OR ADJOINING PROPERTIES.
2. BANKS OR SLOPES OVER 5% SHALL BE SEEDED AS SOON AS POSSIBLE AND SHALL BE PROTECTED WITH A HAY, STRAW OR FIBER MULCH.
3. DURING CONSTRUCTION, THE CONTRACTOR SHALL BE RESPONSIBLE FOR MAINTAINING DRAINAGE AND RUNOFF FLOW DURING STORMS AND PERIODS OF RAINFALL.
4. SEDIMENTATION CONTROL DEVICES SHALL BE INSPECTED CLOSELY AND MAINTAINED PROMPTLY AFTER EACH RAINFALL.
5. CARE SHALL BE TAKEN SO AS NOT TO PLACE "REMOVED SEDIMENTS" WITHIN THE PATH OF EXISTING, NEWLY CREATED (BOTH TEMPORARY AND PERMANENT) OR PROPOSED WATERCOURSES OR THOSE AREAS SUBJECTED TO STORM WATER FLOW.
6. ADDITIONAL SILT SOCKS SHALL BE LOCATED AS CONDITIONS WARRANT OR AS DIRECTED BY THE ENGINEER.

COPLEY - CHAMBERS II
SOIL EROSION & SEDIMENTS CONTROL PLAN
FOR
COPLEY- CHAMBERS II & COPLEY - CHAMBERS III
SITUATED AT
220/228 BROAD STREET
PROVIDENCE, RI
PREPARED FOR
MARATHON DEVELOPMENT LLC

NO.	REVISION	BY	DATE

GAROFALO & ASSOCIATES, INC.
CIVIL & STRUCTURAL ENGINEERS|SURVEYORS
LAND PLANNERS|ENVIRONMENTAL SCIENTISTS
85 CORLISS STREET
P.O. BOX 6145
PROVIDENCE, R.I. 02940
TEL. 401-273-6000

Garofalo & Associates © These documents are the property of the engineer/surveyor and have been prepared for the owner, for this project and for this site only. Not to be used for any other purpose, location or owner without written consent of this owner or one of its affiliates.

JOB NO. 7366-00	DRAWN BY K.Y.Y.
DWG. NO. 7344-00-SESC.dwg	CHECK BY S.S.H.
SCALE: AS SHOWN	APPROVED S.B.G.
	DATE: JULY 11, 2022

SHEET

C-5

L:\7366-00 220 Broad Street (Marathon) - Providence, RI\dwg\01-Current\7366-00-SESC.dwg 07/18/2022 kyingyang 15:12

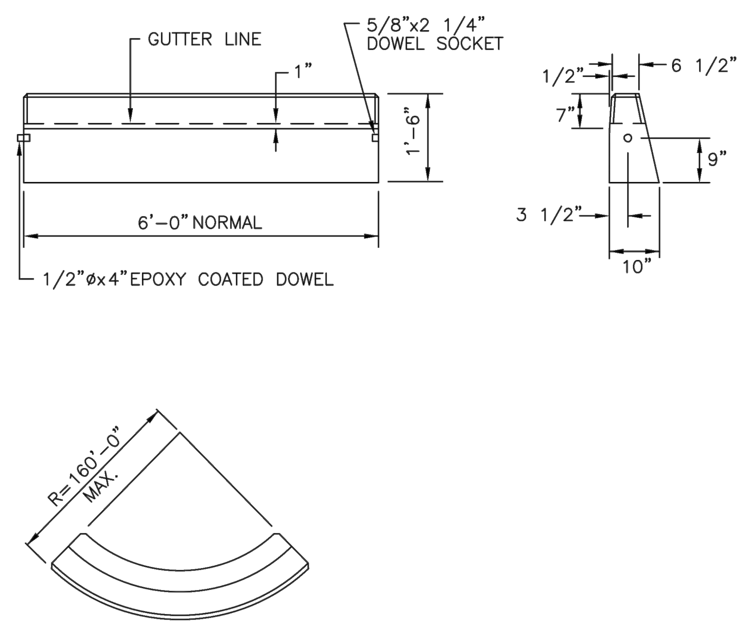

CIRCULAR CURB

NOTES:
1. SHALL BE IN ACCORDANCE WITH SECTION 906 OF THE R.I. STANDARD SPECIFICATIONS.
2. MINIMUM LENGTH OF STRAIGHT OR CIRCULAR FILLER PIECES TO BE 3'-0".
3. EXPOSED SURFACES TO HAVE A SPONGE FLOAT FINISH.
4. CIRCULAR CURB IS REQUIRED ON CURVES WITH RADII OF 160'-0" OR LESS. STRAIGHT CURB TO BE USED ON CURVES OF MORE THAN 160'-0" RADIUS.
5. EXPOSED EDGES TO HAVE A 3/4" CHAMFER.

RHODE ISLAND DEPARTMENT OF TRANSPORTATION

REVISIONS		
NO.	BY	DATE
1	MLP	Mar 05

PRECAST CONCRETE CURB

CHIEF ENGINEER TRANSPORTATION — CHIEF DESIGN ENGINEER TRANSPORTATION — JUNE 15, 1998 ISSUE DATE

R.I. STANDARD 7.1.0

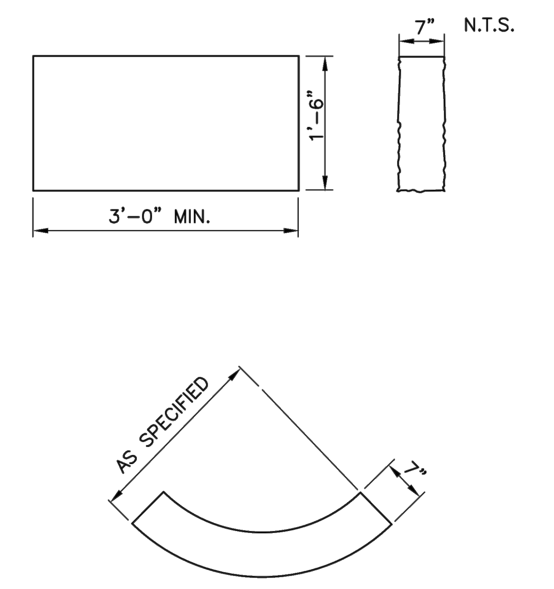

NOTE:
1. SHALL BE IN ACCORDANCE WITH SECTION 906 OF THE RI STANDARD SPECIFICATIONS.
2. TOP SURFACE TO BE DRESSED BY SAW. REMAINDER TO BE SAWCUT OR QUARRY SPLIT.
3. MINIMUM LENGTH OR CIRCULAR PIECES TO BE 3'-0".
4. CIRCULAR CURB IS REQUIRED ON CURVES AS INDICATED. STRAIGHT CURB TO BE USED ON CURVES OF MORE THAN 160'-0" RADIUS.
5. CURB TO BE SET PER PROVIDENCE CURB SETTING DETAIL.

GRANITE CURB - STRAIGHT AND CIRCULAR
N.T.S.
7.3.0 P PROVIDENCE STANDARD

ISSUE DATE: 1/6/17

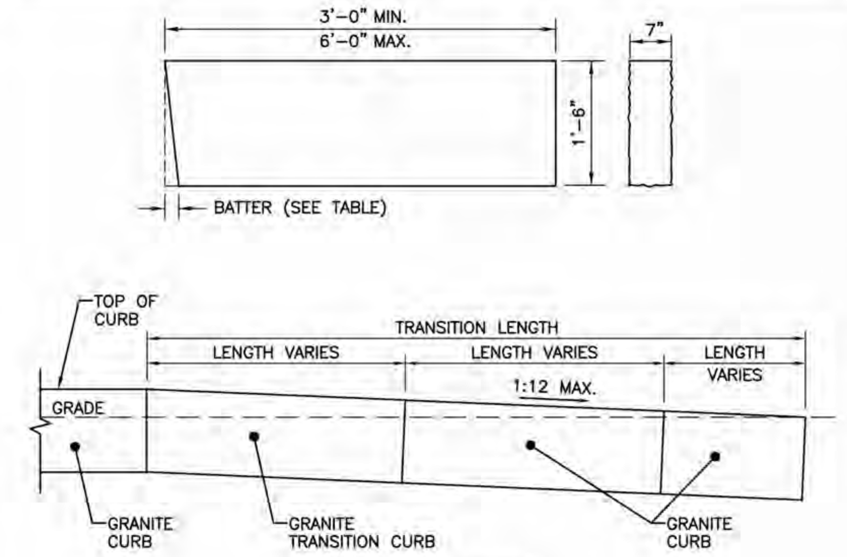

TRANSITION LENGTH (FT.)	BATTER (IN.)
6.0	1.5
7.0	1.3
8.0	1.2
9.5	1.0
11.5	0.8
15.0	0.6
18.0	0.5

NOTES:
1. SHALL BE IN ACCORDANCE WITH SECTION 906 OF THE R.I. STANDARD SPECIFICATIONS.
2. THE CONTRACTOR MAY CUT EXISTING CURB SECTIONS AS REQUIRED TO MEET THIS DETAIL AND THE R.I. STANDARD SPECIFICATIONS, WHERE OLD CURBING IS BEING REUSED.
3. MINIMUM LENGTH OF STRAIGHT OR CIRCULAR CURB FILLER PIECES TO BE 3'-0"(GREATER LENGTHS PREFERRED).
4. TOP SURFACE TO BE DRESSED BY SAW. REMAINDER TO BE SAWCUT OR QUARRY SPLIT.
5. CURB TO BE SET PER PROVIDENCE CURB SETTING DETAIL.

GRANITE WHEELCHAIR RAMP TRANSITION CURB
N.T.S.
7.3.3 P PROVIDENCE STANDARD

ISSUE DATE: 1/6/17

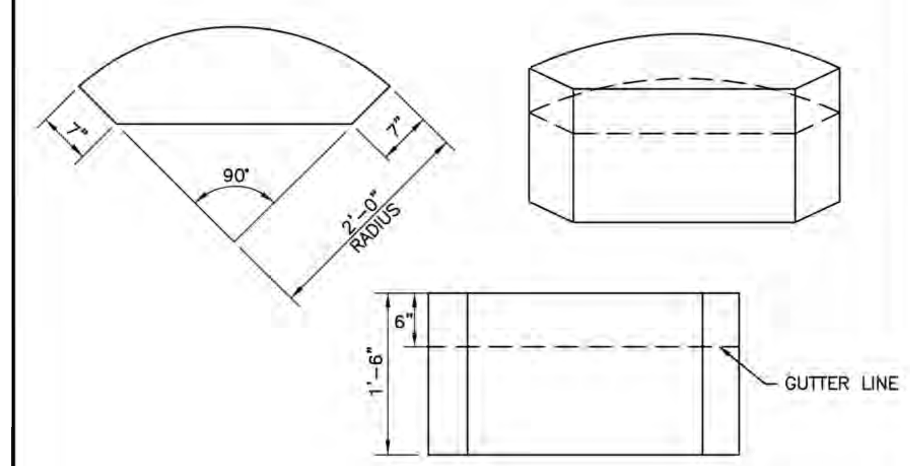

NOTES:
1. SHALL BE IN ACCORDANCE WITH SECTION 906 OF THE R.I. STANDARD SPECIFICATIONS.
2. TOP SURFACE TO BE DRESSED BY SAW. REMAINDER TO BE QUARRY SPLIT OR SAWCUT.

GRANITE 2'-0" RADIUS CURB RETURN
N.T.S.
7.3.4 P PROVIDENCE STANDARD

ISSUE DATE: 1/6/17

TOP SURFACE OF APRON OR REGULAR INLET STONE SHALL BE SAWN TO APPROXIMATELY TRUE PLANES TOP SURFACE SHALL HAVE NO PROJECTION OR DEPRESSION GRATER THAN 1/8".

END OF ALL STONES SHALL BE SQUARE AND SO FINISHED THAT WHEN STONES ARE SET NO SPACE MORE THAN 1/4" SHALL SHOW IN THE JOINT FOR THE FULL WIDTH OF THE TOP OR DOWN THE FACE FOR 9"

QUARRY FACED WITH NO PORTIONS MORE THAN 1" ABOVE OR MORE THAN 1" BELOW A GENERAL PLANE, UNLESS OTHERWISE SAWN

FRONT FACE SHALL BE AT RIGHT ANGLES TO THE PLANE OF THE TOP AND SHALL BE SMOOTH QUARRYSPLIT UNLESS OTHERWISE SAWN

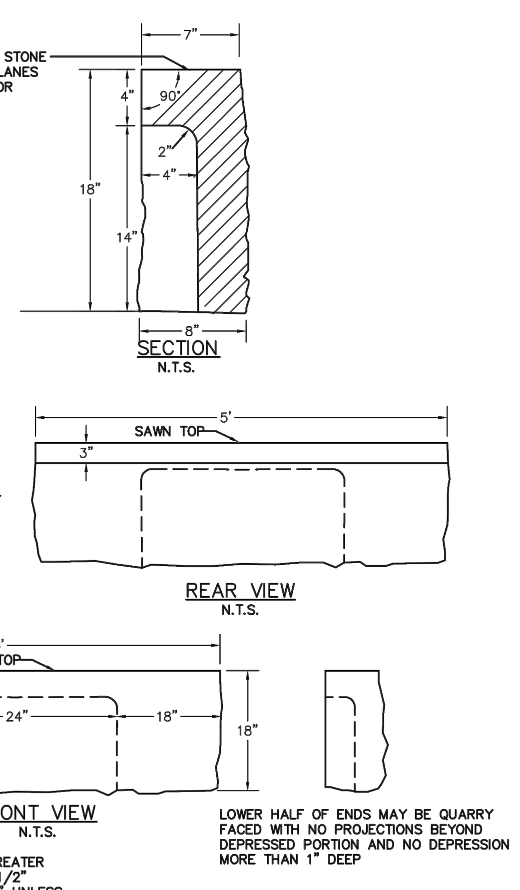

LOWER HALF OF ENDS MAY BE QUARRY FACED WITH NO PROJECTIONS BEYOND DEPRESSED PORTION AND NO DEPRESSION MORE THAN 1" DEEP

FRONT FACE SHALL HAVE NO PROJECTION GREATER THAN 3/4" OR DEPRESSION GREATER THAN 1/2" FOR A DISTANCE DOWN FROM THE TOP OF 9" UNLESS OTHERWISE SAWN

GRANITE APRON STONE - 24" OPENING
N.T.S.
7.3.7 P PROVIDENCE STANDARD

ISSUE DATE: 1/6/17

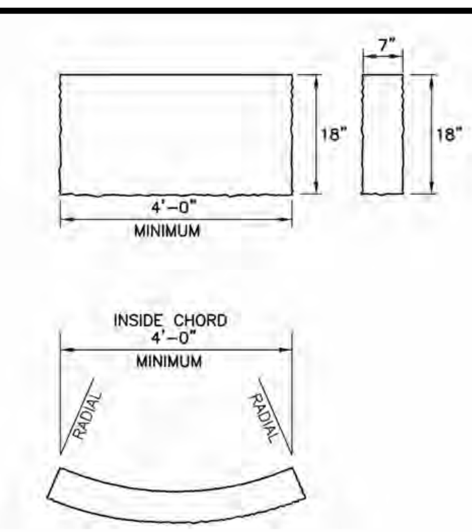

NOTES:
1. SHALL BE IN ACCORDANCE WITH SECTION 906 OF THE R.I. STANDARD SPECIFICATIONS.
2. TOP SURFACE TO BE DRESSED BY SAW TO PROVIDE NO-SLIP SURFACE; REMAINDER MAY BE QUARRY SPLIT.
3. MINIMUM LENGTH OF STRAIGHT OR CIRCULAR CURB FILLER PIECES TO BE 4'-0"
4. CIRCULAR RAMP STONE IS REQUIRED ON CURVES AS INDICATED. STRAIGHT RAMP STONE TO BE USED ON CURVES OF MORE THAN 160'-0" RADIUS.
5. RAMP STONE SHALL BE SET IN ACCORDANCE WITH PROVIDENCE CURB SETTING STANDARD.

GRANITE RAMP STONE
N.T.S.
7.3.9 P PROVIDENCE STANDARD

ISSUE DATE:1/6/17

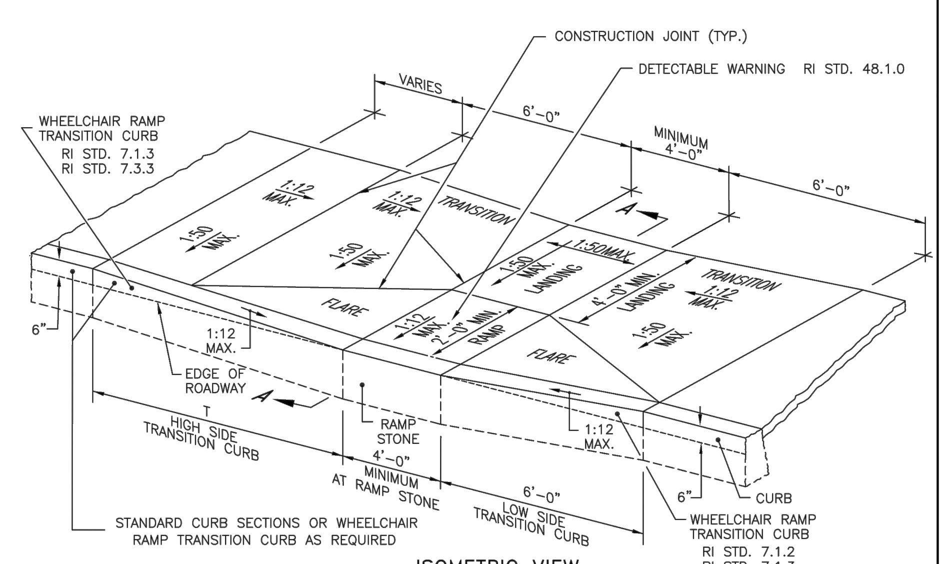

ISOMETRIC VIEW
NOT TO SCALE

ROADWAY PROFILE GRADE	T (FT.)
0.00	6.0
0.01	7.0
0.02	8.0
0.03	9.5
0.04	11.5
0.05	15.0

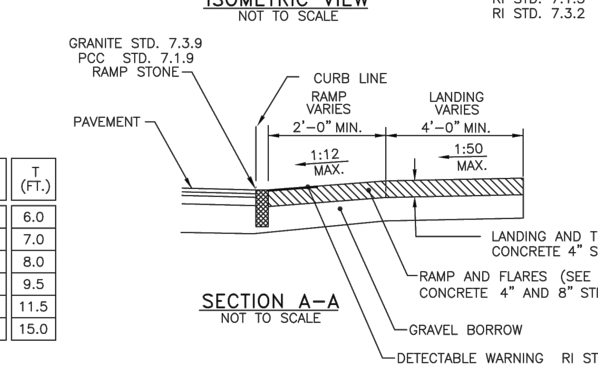

SECTION A-A
NOT TO SCALE

NOTES:
1. SHALL BE IN ACCORDANCE WITH SECTION 905 OF THE RI STANDARD SPECIFICATIONS.
2. WHEN ANY OBSTRUCTION LOCATED IN THE SIDEWALK FALLS WITHIN A CROSSWALK AREA, THE WHEELCHAIR RAMP SHALL BE PLACED SUCH THAT THE OBSTRUCTION FALLS OUTSIDE OF THE RAMP.
3. AT NO TIME IS ANY PART OF THE WHEELCHAIR RAMP TO BE LOCATED OUTSIDE OF THE CROSSWALK, AND IT IS TO BE CENTERED WHENEVER POSSIBLE.
4. DRAINAGE FACILITIES ARE TO BE LOCATED UP-GRADE OF ALL WHEELCHAIR RAMPS.
5. LOCATION OF WHEELCHAIR RAMPS IS AS SHOWN ON CONTRACT DRAWINGS.
6. IN NO INSTANCE SHALL THE SIDEWALK CROSS SLOPE EXCEED 1:50 EXCEPT WITHIN THE RAMP AREA.
7. AN UNOBSTRUCTED PATH OF TRAVEL WITH A MINIMUM WIDTH OF 4'-0" SHALL BE MAINTAINED.
8. THE WHEELCHAIR RAMP SLOPE AND SIDE SLOPES (TRANSITIONS), MUST NOT BE STEEPER THAN 1:12. HOWEVER, THESE SLOPES MAY BE FLATTER THAN 1:12 WHEN WARRANTED BY SURROUNDING CONDITIONS.
9. WHERE THE ROAD PROFILE EXCEEDS 5% THE HIGH SIDE TRANSITION LENGTH (T) SHALL BE EIGHTEEN FEET (18'-0").
10. IN NO CASE, WHERE A STOP LINE IS WARRANTED, SHALL A RAMP BE PLACED BEHIND THE STOP LINE.
11. THE ENTRANCE OF THE WHEELCHAIR RAMP SHALL BE FLUSH WITH THE ROADWAY.
12. THE WHEELCHAIR RAMP SHALL BE CENTERED RADIALLY, OPPOSITE THE RADIUS POINT WHEN POSSIBLE.
13. MINIMUM LENGTH OF STRAIGHT OR CIRCULAR FILLER PIECES TO BE 3'-0" (GREATER LENGTHS PREFERRED).
14. ALL REQUIRED CUTTING OF CURB PIECES TO BE PAID FOR UNDER COST OF CURB.
15. DETECTABLE WARNINGS TO BE PAID FOR UNDER SECTION 942 OF THE RI STANDARD SPECIFICATIONS
16. 8" CONCRETE DEPTH FOR RADIUS WHEELCHAIR RAMPS ONLY. USE 4" DEPTH FOR TANGENT (MID-BLOCK) LOCATIONS.

RHODE ISLAND DEPARTMENT OF TRANSPORTATION

REVISIONS		
NO.	BY	DATE
1	MLP	Oct 2005
2	MLP	Jun 2008
3	MLP	Sep 2012

WHEELCHAIR RAMP

CHIEF ENGINEER TRANSPORTATION — CHIEF DESIGN ENGINEER TRANSPORTATION — JUNE 15, 1998 ISSUE DATE

R.I. STANDARD 43.3.0

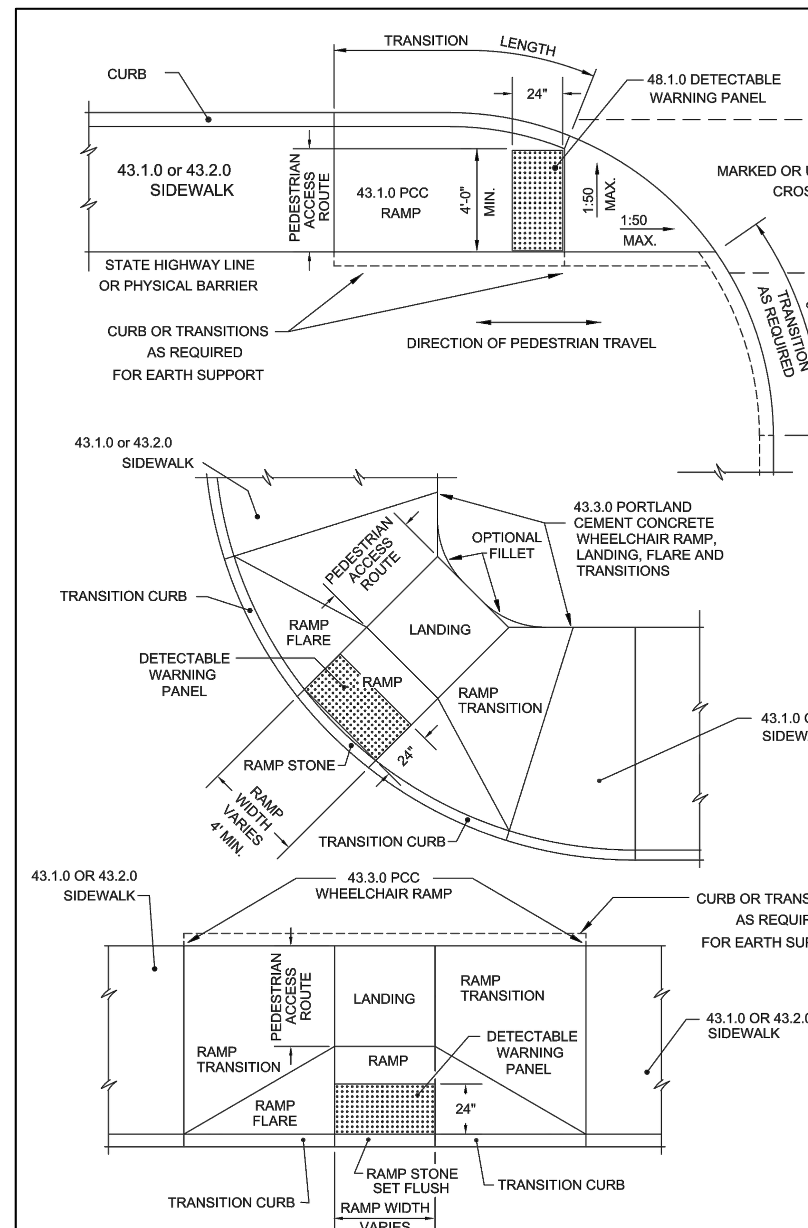

NOTES
1. DETECTABLE WARNING PANEL SHALL BE IN ACCORDANCE WITH SECTION 942 OF THE RHODE ISLAND STANDARD SPECIFICATIONS; PANEL TO MATCH RAMP WIDTH.

RHODE ISLAND DEPARTMENT OF TRANSPORTATION

REVISIONS		
NO.	BY	DATE
1	MLP	Mar 2005
2	MLP	Sep 2012

DETECTABLE WARNING PANEL PLACEMENT

CHIEF ENGINEER TRANSPORTATION — CHIEF DESIGN ENGINEER TRANSPORTATION — JUNE 15, 1998 ISSUE DATE

R.I. STANDARD 48.1.0

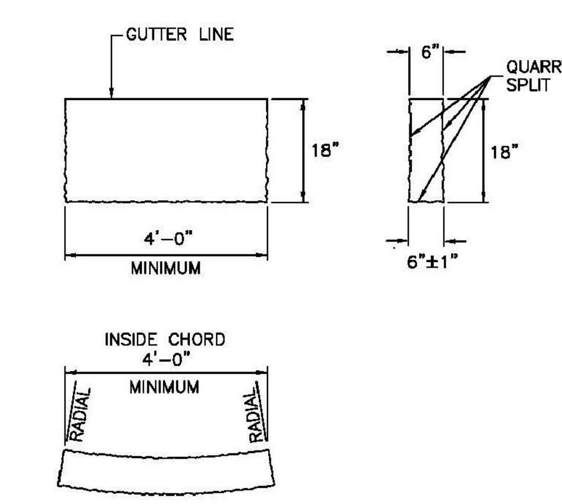

CIRCULAR GRANITE RAMP STONE

NOTES:
1. SHALL BE IN ACCORDANCE WITH SECTION 906 OF THE R.I. STANDARD SPECIFICATIONS.
2. TOP SURFACE TO BE DRESSED BY SAW TO PROVIDE NO-SLIP SURFACE; REMAINDER MAY BE QUARRY SPLIT.
3. MINIMUM LENGTH OF STRAIGHT OR CIRCULAR RAMP STONE TO BE 4'-0".
4. CIRCULAR RAMP STONE IS REQUIRED ON CURVES WITH RADII OF 160'-0" OR LESS. STRAIGHT RAMP STONE TO BE USED ON CURVES OF MORE THAN 160'-0" RADIUS.
5. RAMP STONE SHALL BE SET IN ACCORDANCE WITH STD. 43.3.0 AND IN CONJUNCTION

RHODE ISLAND DEPARTMENT OF TRANSPORTATION

REVISIONS		
NO.	BY	DATE
1	MLP	Jun 2010
2	MLP	Sep 2012

GRANITE RAMP STONE

CHIEF ENGINEER TRANSPORTATION — CHIEF DESIGN ENGINEER TRANSPORTATION — JUNE 27, 2008 ISSUE DATE

R.I. STANDARD 7.3.9

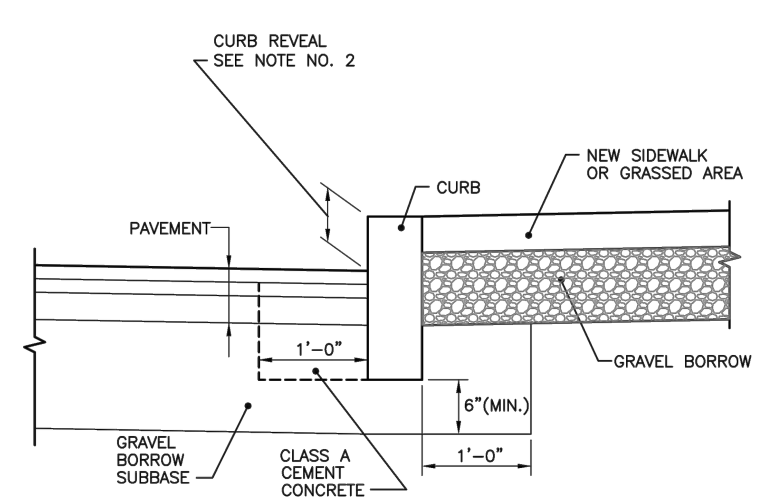

NOTES:
1. SHALL BE IN ACCORDANCE WITH SECTION 906 OF THE R.I. STANDARD SPECIFICATIONS.
2. NEW CURBING CONSTRUCTION SHALL BE SET AT A 6 INCH REVEAL OR AS INDICATED ON PLANS OR DIRECTED BY PROVIDENCE DPW. NEW CURBING INSTALLED ADJACENT TO EXISTING CURBING SHALL MATCH THE EXISTING REVEAL OR A MINIMUM OF 4 INCHES, WHICHEVER IS GREATER. IF ADJACENT EXISTING REVEAL IS LESS THAN 4 INCHES, THE FIRST SECTION OF NEW CURB SHALL TRANSITION TO 4" REVEAL,

CURB SETTING DETAIL
N.T.S.
7.6.0 P PROVIDENCE STANDARD

ISSUE DATE: 1/6/17

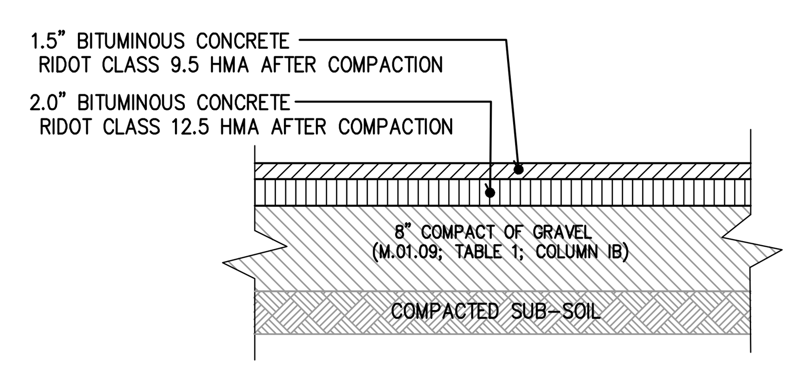

STANDARD DUTY BITUMINOUS CONCRETE PAVEMENT SECTION (BCP)
N.T.S.

COPLEY - CHAMBERS II
CONSTRUCTION DETAILS-1
FOR
COPLEY - CHAMBERS II & COPLEY - CHAMBERS III
SITUATED AT
220/228 BROAD STREET
PROVIDENCE, RI
PREPARED FOR
MARATHON DEVELOPMENT LLC

NO.	REVISION	BY	DATE

GAROFALO & ASSOCIATES, INC.
CIVIL & STRUCTURAL ENGINEERS\SURVEYORS
LAND PLANNERS\ENVIRONMENTAL SCIENTISTS

85 CORLISS STREET
P.O. BOX 6145
PROVIDENCE, R.I. 02940
TEL. 401-273-6000

Garofalo & Associates © These drawings are the property of the engineer/surveyor and have been prepared for the owner, for this project at this site and are not to be used for any other purpose, location or owner without written consent of this owner or one of its directors.

JOB NO. 7366-00
DWG. NO. 7366-00-Base.dwg
SCALE: AS SHOWN
DRAWN BY R.A.S.
CHECK BY S.S.H.
APPROVED S.B.G.
DATE: JULY 11, 2022

SHEET
C-6
9 OF 11 SHEETS

L:\7366-00 220 Broad Street (Marathon) - Providence, RI\dwg\01-Current\7366-00-DETS.dwg 07/14/2022 kyingyang 15:06

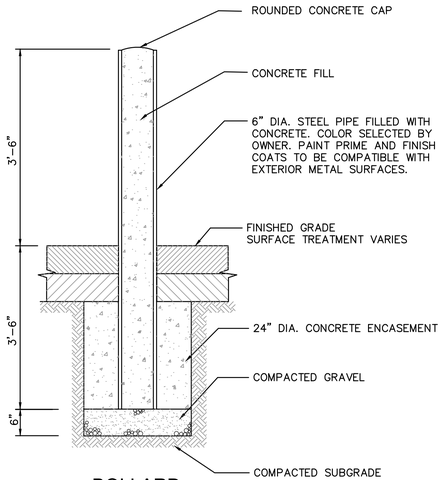

BOLLARD

N.T.S.

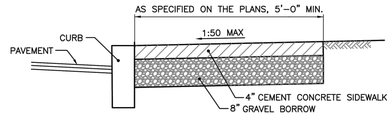

NOTES

1. SHALL BE IN ACCORDANCE WITH SECTION 905 OF THE R.I. STANDARD SPECIFICATIONS.
2. SEE CURB SETTING DETAIL WHERE APPLICABLE.
3. RUNNING SLOPE OF SIDEWALK SHALL NOT EXCEED 8.3% (1:12). TYPICALLY, RUNNING SLOPE SHALL MATCH ROAD SLOPE.
4. CROSS SLOPE OF SIDEWALK SHALL NOT EXCEED 2% (1:50).
5. SIDEWALK MAY BE SUBJECT TO GRASS STRIP INSTALLATION. CONSULT WITH DPW ENGINEERING
6. GRAVEL BORROW BASE SHALL COMPACT TO ACHEIVE SOIL DENSITY VALUES OF 95% MODIFIED PROCTOR DENSITY (AASHTO T180).
7. SIDEWALK REPAIRS TWENTY FEET OR LONGER ARE SUBJECT TO REQUIREMENTS HEREIN. SIDEWALK REPAIRS SHORTER THAN TWENTY FEET SHALL MAKE EVERY EFFORT TO MEET REQUIRED SLOPES.
8. CONTROLL JOINTS SHALL BE INSTALLED EVERY 5 FEET IN EACH DIRECTION.
9. EXPANSION JOINTS SHALL BE INSTALLED EVERY 20 FEET IN EACH DIRECTION AT FOUNDATIONS AND WALLS AND IN A SQUARE PATTERN AROUND MANHOLE COVERS, HYDRANTS, SIGN POSTS AND UTILITY POLES. THE EXPANSION JOINT SHALL BE THE FULL DEPTH OF THE SIDEWALK AND FILLED WITH AN APPROVED TYPE OF PREMOLDED EXPANSION JOINT FILLER.

CEMENT CONCRETE SIDEWALK

N.T.S.

43.1.0 P PROVIDENCE STANDARD

ISSUE DATE: 1/6/17

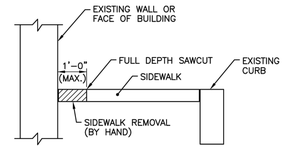

NOTES:

1. IN AREAS WHERE SIDEWALKS ARE TO BE REMOVED IN FRONT OF EXISTING WALLS OR BUILDINGS, THE CONTRACTOR SHALL SAWCUT ONE(1) FOOT (MAXIMUM) IN FRONT OF THE WALL/BUILDING AND REMOVE THE SIDEWALK STRUCTURE BY HAND.

2. IN THE EVENT THAT THE EXISTING SIDEWALK IS A STRUCTURAL ELEMENT OF THE WALL/BUILDING, THE EXISTING SIDEWALK IN FRONT OF THESE STRUCTURES WILL REMAIN IN-PLACE AND A NEW SIDEWALK CONSTRUCTED TO MATCH THE EXISTING SECTION.

3. ANY DAMAGE TO THE WALL OR BUILDING BY THE CONTRACTOR SHALL BE REPAIRED BY THE CONTRACTOR AT NO ADDITIONAL COST TO THE CITY.

SIDEWALK REMOVAL DETAIL

N.T.S.

43.1.1 P PROVIDENCE STANDARD

ISSUE DATE: 1/6/17

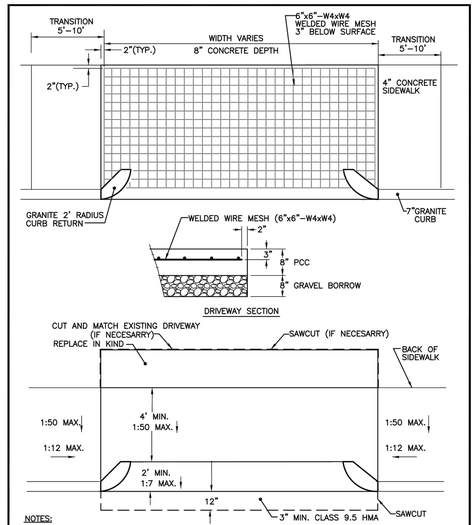

NOTES:

1. SHALL BE IN ACCORDANCE WITH SECTION 905 OF THE RIDOT STANDARD SPECIFICATIONS.
2. RUNNING SLOPE OF SIDEWALK/DRIVEWAY SHALL NOT EXCEED 8.3% (1:12)
3. 4' MINIMUM ACCESSIBLE PATH SHALL BE INSTALLED WITH CROSS SLOPE NOT EXCEEDING 2% (1:50)
4. RESIDENTIAL CURB CUTS SHALL BE NO WIDER THAN 12' FROM INSIDE OF CURB RETURNS.

CEMENT CONCRETE DRIVEWAYS

N.T.S.

43.5.0 P PROVIDENCE STANDARD

ISSUE DATE: 1/6/17, REVISED 10/6/17

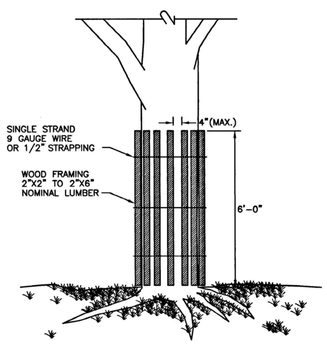

NOTE:
SHALL BE IN ACCORDANCE WITH SECTION L.11 OF THE STANDARD SPECIFICATIONS.

RHODE ISLAND DEPARTMENT OF TRANSPORTATION

REVISIONS		
NO.	BY	DATE

TREE PROTECTION DEVICE

CHIEF ENGINEER TRANSPORTATION — CHIEF DESIGN ENGINEER TRANSPORTATION — JUNE 15, 1998 ISSUE DATE

R.I. STANDARD 51.1.0

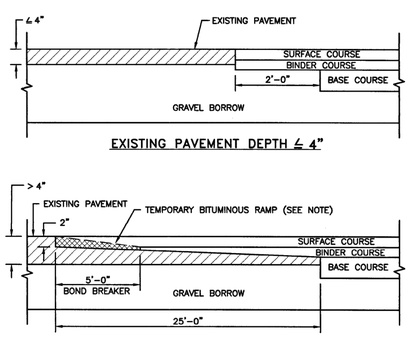

NOTE:
A BOND BREAKER (TAPERED OR EQUIVALENT) WILL BE PLACED 5'-0" FROM THE JOINT AND COVERED WITH THE BINDER COURSE AS THE TEMPORARY RAMP. PRIOR TO PLACING THE SURFACE COURSE, THE BINDER COURSE AND BOND BREAKER WILL BE REMOVED.

RHODE ISLAND DEPARTMENT OF TRANSPORTATION

REVISIONS		
NO.	BY	DATE

TRANSVERSE PAVEMENT CUT AND MATCH

CHIEF ENGINEER TRANSPORTATION — CHIEF DESIGN ENGINEER TRANSPORTATION — JUNE 15, 1998 ISSUE DATE

R.I. STANDARD 47.1.1

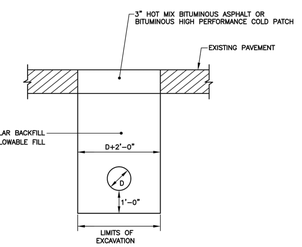

NOTES:

1. BITUMINOUS CONCRETE SHALL ADHERE TO RIDOT STANDARD SPECIFICATIONS, SECTION 401.
2. GRANULAR BASE MATERIAL SHALL BE COMPACTED TO 95% OF MODIFIED PROCTOR DENSITY (AASHTO T180), AND SHALL ADHERE TO RIDOT STANDARD SPECIFICATIONS, SECTION 301.
3. EXCAVATABLE FLOWABLE FILL (CONTROLLED DENSITY FILL, CDF) SHALL ADHERE TO RIDOT STANDARD SPECIFICATIONS, SECTION 603.
4. ANY TEMPORARY PATCH INSTALLED PRIOR TO SEPTEMBER 1 IN ANY YEAR SHALL BE REPLACED WITH PERMANENT PATCH NO LATER THAN DECEMBER 1 OF THAT YEAR.

   TEMPORARY PATCHES MADE BETWEEN SEPTEMBER 1 AND MARCH 30 SHALL BE MAINTAINED BY THE PERMITTEE UNTIL A PERMANENT PATCH CAN BE INSTALLED, NO LATER THAN JUNE 15.
5. IF TEMPORARY PATCH IS INSTALLED, PERMITTEE MAY ALLOW NO MORE THAN 45 DAYS FOR SETTLING BEFORE PERMANENT RESTORATION. THE PERMITTEE SHALL BE RESPONSIBLE TO MAINTAIN TEMPORARY ROADWAY RESTORATIONS IN A SAFE CONDITION FOR ALL TYPES OF TRAVEL UNTIL A PERMANENT PAVEMENT REPAIR HAS BEEN MADE. TO ENSURE PROPER MAINTENANCE, THE PERMITTEE SHALL PERFORM PERIODIC INSPECTION OF EACH TEMPORARY PATCH UNTIL IT IS REPLACED WITH A PERMANENT PATCH.

TEMPORARY ROADWAY RESTORATION

N.T.S.

60.1.0 P PROVIDENCE STANDARD

ISSUE DATE: 1/6/17

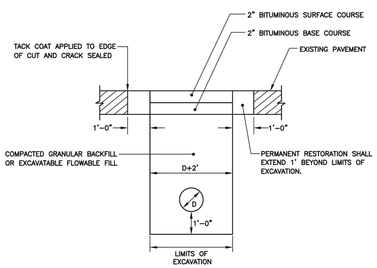

NOTES:

1. BITUMINOUS CONCRETE SHALL ADHERE TO RIDOT SPECIFICATIONS, SECTION 401.
2. GRANULAR BASE MATERIAL SHALL BE COMPACTED TO 95% OF MODIFIED PROCTOR DENSITY (AASHTO T180). GRAVEL BASE COURSE SHALL ADHERE TO RIDOT SPECIFICATIONS, SECTION 301.
3. EXCAVATABLE FLOWABLE FILL (CONTROLLED DENSITY FILL, CDF) SHALL ADHERE TO 95% OF THE MODIFIED PROCTOR DENSITY (AASHTO T180), ADHERING TO RIDOT SPECIFICATIONS, SECTION 603.
4. PRIOR TO PERMANENT RESTORATION, ALL EDGES OF THE EXCAVATED AREA AND ONE FOOT BEYOND SHALL BE SAWCUT TO A CLEAN, SQUARE EDGE.
5. IF EXCAVATION IS ON A PROTECTED STREET, THE REMAINING ROADWAY OUTSIDE THE TRENCH TO THE NEAREST CURB SHALL BE MILLED 1.5 INCHES WITH 1.5 INCH BITUMINOUS CONCRETE SURFACE OVERLAY. THE JOINTS SHALL BE SEALED USING INFRARED TECHNOLOGY. THE LENGTH OF THE NEW PAVED AREA MUST BE A MINIMUM OF 10 FEET TO ALLOW FOR PROPER ROLLING.
6. IF EXCAVATION IS ON A NON-PROTECTED STREET, AND THE DISTANCE FROM EDGE OF EXCAVATION TO EDGE OF ROADWAY IS TWO FEET OR LESS, THE REMAINING AREA TO EDGE OF ROADWAY SHALL BE REMOVED AND REPLACED IN CONJUNCTION WITH THE PERMANENT PAVEMENT RESTORATION.

PERMANENT ROADWAY RESTORATION - GRANULAR BASE

N.T.S.

60.2.0 P PROVIDENCE STANDARD

ISSUE DATE: 1/6/17

COPLEY - CHAMBERS II
CONSTRUCTION DETAILS-2
FOR
COPLEY- CHAMBERS II &
COPLEY - CHAMBERS III
SITUATED AT
220/228 BROAD STREET
PROVIDENCE, RI
PREPARED FOR
MARATHON DEVELOPMENT LLC

NO.	REVISION	BY	DATE

GAROFALO & ASSOCIATES, INC.
CIVIL & STRUCTURAL ENGINEERS/SURVEYORS
LAND PLANNERS/ENVIRONMENTAL SCIENTISTS

85 CORLISS STREET
P.O. BOX 6145
PROVIDENCE, R.I. 02940
TEL. 401-273-6000

Garofalo & Associates © The drawings and specifications are the property of the engineer/surveyor and have been prepared for the owner, for this project and shall not be used for any other purpose, location or owner without written consent of this owner or one of its directors.

JOB NO. 7366-00	DRAWN BY R.A.S.
DWG. NO. 7366-00-Base.dwg	CHECK BY S.S.H.
SCALE: AS SHOWN	APPROVED S.B.G.
	DATE: JULY 11, 2022

SHEET

C-7

L:\7366-00 220 Broad Street (Marathon) - Providence, RI\dwg\01-Current\7366-00-DETS.dwg 07/14/2022 kyingyang 15:07

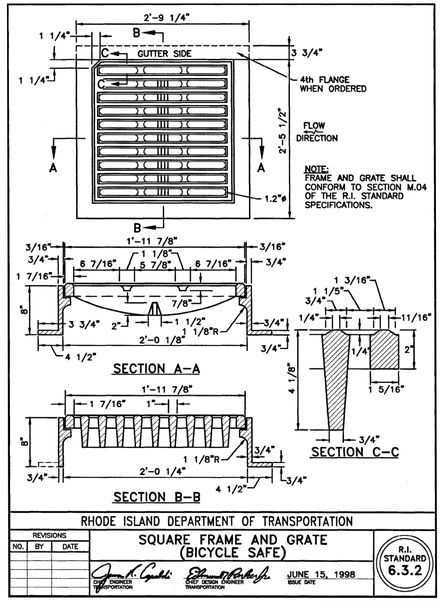

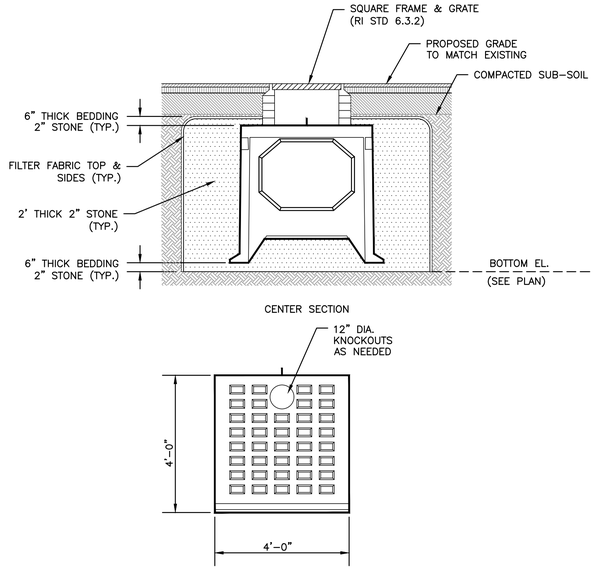

PRECAST GALLEY

N.T.S.

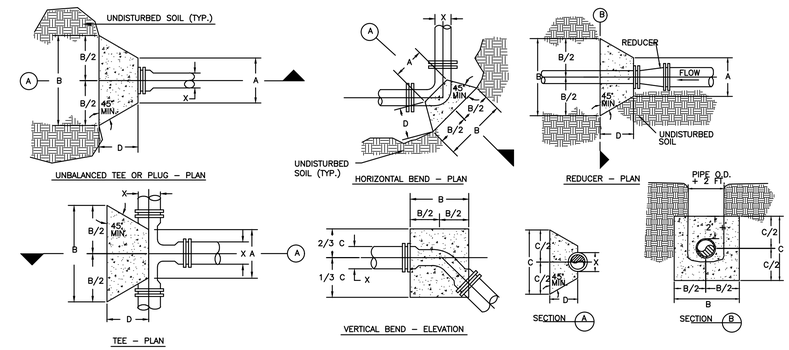

Pipe Size X	A	B	C	D	VOL. CONC.
Line Pressure = 150 PSI, Soil Pressure = 2000 PSF					
90 DEGREE BEND					
6"	0'-10"	1'-11"	1'-11"	1'-6"	4± CF
8"	0'-10"	2'-7"	2'-7"	1'-6"	7± CF
12"	0'-10"	3'-10"	3'-10"	1'-6"	14± CF
45 DEGREE BEND					
6"	0'-10"	1'-6"	1'-6"	1'-0"	2± CF
8"	0'-10"	1'-11"	1'-11"	1'-0"	3± CF
12"	0'-10"	2'-10"	2'-10"	1'-0"	5±CF

Pipe Size X	A	B	C	D	VOL. CONC.
Line Pressure = 150 PSI, Soil Pressure = 2000 PSF					
22-1/2 DEGREE BEND					
6"	0'-10"	1'-0"	1'-0"	1'-0"	1± CF
8"	0'-10"	1'-4"	1'-4"	1'-0"	1.5± CF
12"	0'-10"	2'-0"	2'-0"	1'-0"	3± CF
11-1/4 DEGREE BEND					
6"	0'-10"	0'-10"	0'-10"	1'-0"	0.7± CF
8"	0'-10"	1'-0"	1'-0"	1'-0"	1± CF
12"	0'-10"	1'-6"	1'-6"	1'-0"	2±CF

Pipe Size X	A	B	C	D	VOL. CONC.
Line Pressure = 150 PSI, Soil Pressure = 2000 PSF					
TEE & PLUG					
6"	0'-10"	1'-8"	1'-8"	1'-3"	3± CF
8"	0'-10"	2'-2"	2'-2"	1'-3"	4± CF
12"	0'-10"	3'-3"	3'-3"	1'-3"	8± CF

NOTES :
1. BLOCKING SHALL BE CLASS B(AE) CONCRETE. "SACRETE" WILL NOT BE ALLOWED.
2. 50lb FELT PAPER TO BE PLACED BETWEEN CONCRETE AND ALL PIPE SURFACES.

THRUST BLOCKS

NOT TO SCALE

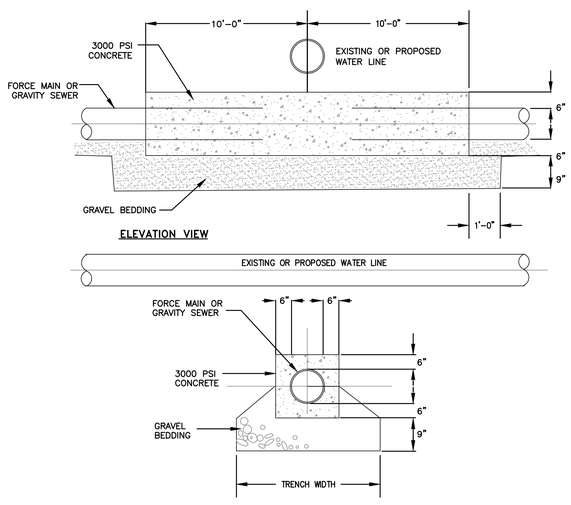

CONCRETE SLEEVE

NOT TO SCALE

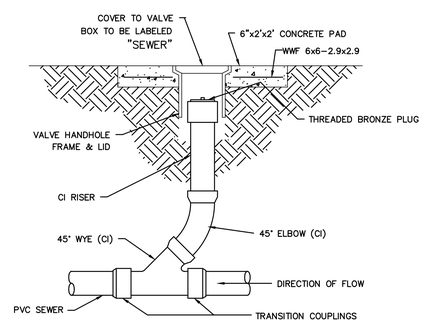

CLEANOUT DETAIL

N.T.S.

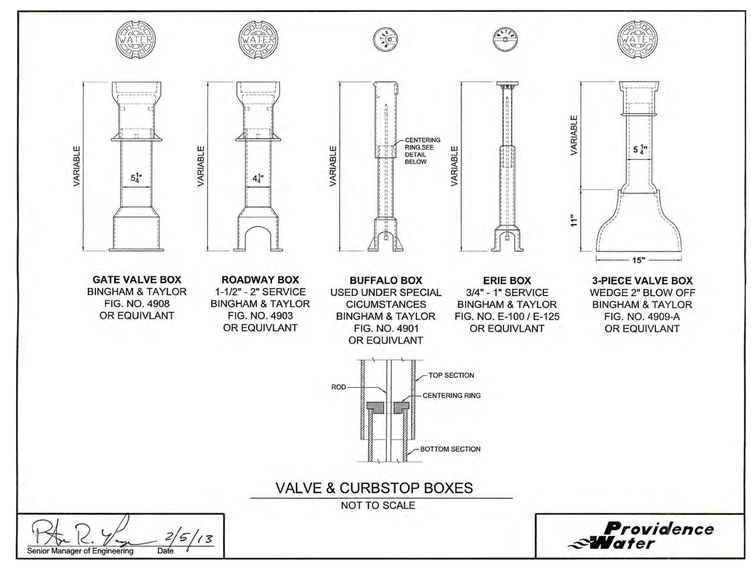

VALVE & CURBSTOP BOXES

NOT TO SCALE

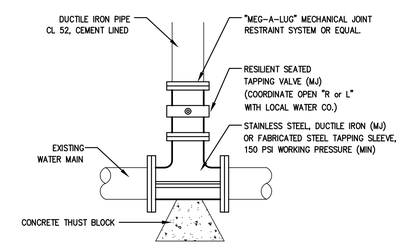

TYPICAL TAPPING SLEEVE & VALVE

NOT TO SCALE

COPLEY - CHAMBERS II
CONSTRUCTION DETAILS-3
FOR
COPLEY- CHAMBERS II &
COPLEY - CHAMBERS III
SITUATED AT
220/228 BROAD STREET
PROVIDENCE, RI
PREPARED FOR
MARATHON DEVELOPMENT LLC

NO.	REVISION	BY	DATE

GAROFALO & ASSOCIATES, INC.
CIVIL & STRUCTURAL ENGINEERS|SURVEYORS
LAND PLANNERS|ENVIRONMENTAL SCIENTISTS

85 CORLISS STREET
P.O. BOX 6145
PROVIDENCE, R.I. 02940
TEL. 401-273-6000

Garofalo & Associates, ©
These drawings are the property of the engineer/surveyor and have been prepared for the owner, for this project of this date only and not to be used for any other purpose, location or owner without written consent of this owner or one of its directors.

JOB NO. 7366-00	DRAWN BY R.A.S.
DWG. NO. 7366-00-Base.dwg	CHECK BY S.S.H.
SCALE: AS SHOWN	APPROVED S.B.G.
	DATE: JULY 11, 2022

SHEET

C-8

11 OF 11 SHEETS

L:\7366-00 220 Broad Street (Marathon) - Providence, RI\dwg\01-Current\7366-00-DETS.dwg 07/18/2022 kyingyang 15:36

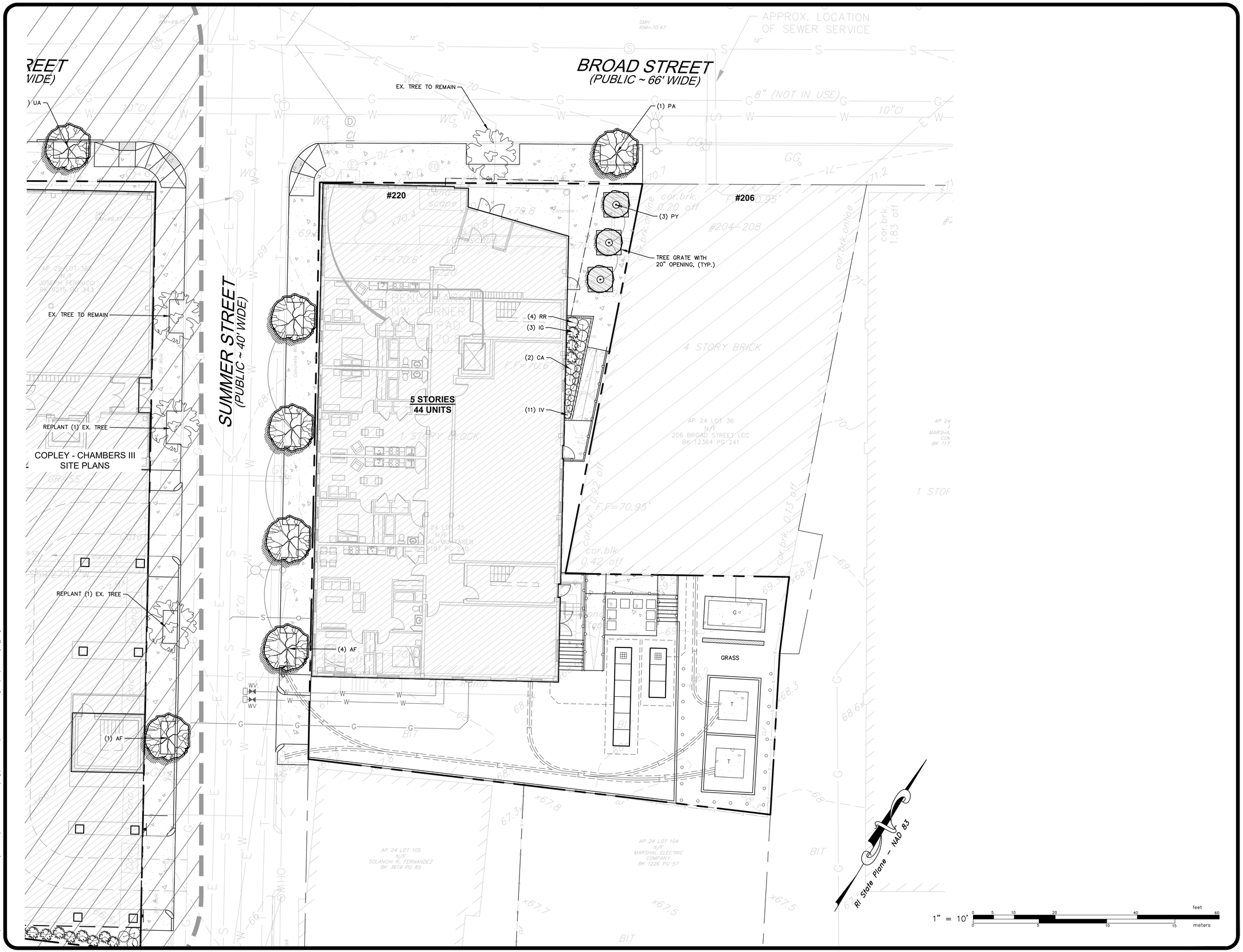

L:\7366-00 220 Broad Street (Marathon) - Providence, RI\dwg\01-Current\7366-00-LAND.dwg 07/18/2022 kyingyong 15:28

COPLEY - CHAMBERS II
LANDSCAPE PLAN
FOR
COPLEY- CHAMBERS II &
COPLEY - CHAMBERS III
SITUATED AT
220/228 BROAD STREET
PROVIDENCE, RI
PREPARED FOR
MARATHON DEVELOPMENT LLC

NO.	REVISION	BY	DATE

GAROFALO & ASSOCIATES, INC.
CIVIL & STRUCTURAL ENGINEERS|SURVEYORS
LAND PLANNERS|ENVIRONMENTAL SCIENTISTS

85 CORLISS STREET
P.O. BOX 6145
PROVIDENCE, R.I. 02940
TEL. 401-273-6000

Garofalo & Associates ©
These drawings are the property of the engineer/surveyor and have been prepared for the owner, for this project only. They are not to be used for any other purpose, location or owner without written consent of this owner or one of its directors.

JOB NO. 7366-00	DRAWN BY K.Y.Y.
DWG. NO. 7344-00-LAND.dwg	CHECK BY S.S.H.
SCALE: AS SHOWN	APPROVED S.B.G.
	DATE: JULY 11, 2022

SHEET

L-1

1 OF 2 SHEETS

GENERAL LANDSCAPE NOTES:

1. THE CONTRACTOR SHALL INSTALL ALL PLANT MATERIAL IN CONFORMANCE WITH THE RHODE ISLAND DEPARTMENT OF TRANSPORTATION STANDARD SPECIFICATIONS FOR ROAD AND BRIDGE CONSTRUCTION, LATEST EDITION.
2. ALL PLANT MATERIAL SHALL MEET THE AMERICAN OF NURSERYMEN STANDARDS FOR NURSERY STOCK, LATEST EDITION, AND ITS AMENDMENTS. PLANT ONLY DURING SEASONS NORMAL TO THE PARTICULAR VARIETY. NO SUBSTITUTIONS SHALL BE ACCEPTED WITHOUT PRIOR APPROVAL BY THE LANDSCAPE ARCHITECT.
3. ALL PLANT MATERIAL FURNISHED BY THE CONTRACTOR SHALL BE GUARANTEED FOR A PERIOD OF ONE YEAR. IF THE FIRST YEAR ENDS DURING THE DORMANT PERIOD, THE GUARANTEE SHALL EXTEND TO THE START OF THE NEXT LEAFING. DURING THE ONE-YEAR GUARANTEE PERIOD THE CONTRACTOR SHALL EMPLOY ACCEPTED HORTICULTURAL PRACTICES TO KEEP THE PLANTS INSTALLED IN LIVING, HEALTHY CONDITION. FOLLOWING THE ONE-YEAR GUARANTEE PERIOD THE OWNER/OWNERS SHALL INSPECT ALL PLANT MATERIAL FOR HEALTHY ORNAMENTAL QUALITY. AT THAT TIME SHOULD ANY PLANT MATERIAL BE FOUND IN INADEQUATE HEALTH THE CONTRACTOR SHALL BE RESPONSIBLE TO REPLACE THE PLANT IN KIND AND PROVIDE A ONE-YEAR GUARANTEE FOR THE REPLACEMENT PLANT.
4. INSTALL ALL PLANT MATERIAL AS SHOWN IN DETAILS.
5. STAKE ALL TREES OVER 5' AS SHOWN ON DETAILS. REMOVE STAKES AT THE END OF THE GUARANTEE PERIOD.
6. THE CONTRACTOR IS RESPONSIBLE FOR KEEPING THE SITE CLEAN OF MISCELLANEOUS DEBRIS THROUGHOUT THE CONSTRUCTION PERIOD. ALL WASTE MATERIAL IS TO BE DISPOSED OF IMMEDIATELY TO AN OFFSET LOCATION, UNLESS OTHERWISE INDICATED ON THE PLANS.
7. THE CONTRACTOR SHALL PERFORM ALL WORK IN ACCORDANCE WITH ALL LOCAL, STATE, AND FEDERAL REGULATIONS, AND SHALL OBTAIN ALL NECESSARY PERMITS FOR THE PROJECT.
8. LAYOUT: ALL NOTES AND DIMENSIONS ARE TYPICAL UNLESS OTHERWISE NOTED. ALL DIMENSIONS ARE SQUARE (PARALLEL OR PERPENDICULAR) UNLESS OTHERWISE NOTED. THE CONTRACTOR SHALL NOTIFY THE OWNER/OWNER'S REPRESENTATIVE IMMEDIATELY IN THE EVENT OF ANY DISCREPANCIES FOUND IN THE CONTRACT DOCUMENTS AND/OR IN THE FIELD, OR ON CONDITIONS UNCOVERED IN THE WORK WHICH ARE NOT REFLECTED IN THE PLANS.
9. PROTECTION OF EXISTING PLANTINGS: MAXIMUM EFFORT SHOULD BE MADE TO SAVE TREES OF OTHER PLANT SPECIMENS WHICH ARE LARGE FOR THEIR SPECIES, RARE TO THE AREA, OR OF SPECIAL HORTICULTURAL OR LANDSCAPE VALUE. CONTACT OWNER/LANDSCAPE ARCHITECT BEFORE REMOVING ANY SPECIMEN OF THIS TYPE UNLESS OTHERWISE NOTED ON THE PLANS. NO MATERIAL OR TEMPORARY SOIL DEPOSITS SHALL BE PLACED WITHIN THE DRIP LINE OF SHRUBS OR TREES DESIGNATED ON THE LANDSCAPE PLAN TO BE RETAINED. PROTECTIVE BARRIERS ARE TO BE INSTALLED AROUND EACH PLANT AND/OR GROUP OF PLANTS THAT ARE TO REMAIN ON THE SITE. BARRIERS SHALL NOT BE SUPPORTED BY THE PLANTS THEY ARE PROTECTING, BUT SHALL BE SELF SUPPORTING. THEY SHALL BE OF MINIMUM OF FOUR FEET (4') HIGH AND CONSTRUCTED OF A DURABLE MATERIAL, SUCH AS SNOW OR SILT FENCE, THAT WILL LAST UNTIL CONSTRUCTION IS COMPLETED.
10. PRUNING: THE CONTRACTOR SHALL CAREFULLY PRUNE BRANCHES IN THE WAY OF CONSTRUCTION BY USING ONLY APPROVED METHODS AND TOOLS. THE USE OF AXES FOR TRIMMING OR SPURS FOR CLIMBING WILL NOT BE PERMITTED.
11. UTILITIES: THE CONTRACTOR SHALL BE SOLELY RESPONSIBLE FOR ANY AND ALL UTILITY DAMAGE INCLUDING DAMAGE THAT MAY OCCUR TO NEW UTILITIES. THE CONTRACTOR IS REQUIRED TO CONTACT DIG-SAFE PRIOR TO COMMENCING ANY SITE CONSTRUCTION. THE CONTRACTOR IS SPECIFICALLY CAUTIONED THAT THE LOCATION AND/OR ELEVATION OF EXISTING UTILITIES AS SHOWN ON THESE PLANS IS BASED ON RECORDS OF THE VARIOUS UTILITY COMPANIES, AND WHERE POSSIBLE, MEASUREMENTS TAKEN IN THE FIELD. THE CONTRACTOR MUST CALL THE APPROPRIATE UTILITY COMPANIES AT LEAST 72 HOURS BEFORE ANY EXCAVATION TO REQUEST EXACT FIELD LOCATION OF UTILITIES. IT SHALL BE THE RESPONSIBILITY OF THE CONTRACTOR TO RELOCATE ALL EXISTING UTILITIES WHICH CONFLICT WITH THE PROPOSED IMPROVEMENTS SHOWN ON THE PLANS.
12. DISTURBED AREAS: ALL AREAS DISTURBED DURING THE COURSE OF CONSTRUCTION ARE TO BE RESTORED TO ORIGINAL (OR BETTER) CONDITION BY THE CONTRACTOR BEFORE COMPLETION OF THE PROJECT, AND ARE SUBJECT TO APPROVAL BY THE LANDSCAPE ARCHITECT AND OWNER. ALL GRASS AREAS DISTURBED DURING CONSTRUCTION SHALL BE FINE RAKED TO REMOVE STONES AND LOAMED AND SEEDED AS PER SPECIFICATIONS.
13. DRAINAGE SYSTEMS: CONTRACTOR IS RESPONSIBLE FOR GENERAL CLEAN-OUT OF ALL CATCH BASINS, MANHOLES, AND/OR OTHER DRAINAGE FEATURES ON THE SITE WHICH HAVE ACCUMULATED SEDIMENT AS A RESULT OF CONSTRUCTION ACTIVITIES.

LOAM AND SEEDING

APPLICATION OF LOAM AND SEED SHALL BE IN ACCORDANCE WITH APPLICABLE SECTIONS OF THE RHODE ISLAND DEPARTMENT OF TRANSPORTATION STANDARD SPECIFICATIONS FOR ROAD AND BRIDGE CONSTRUCTION, LATEST EDITION.

1. LOAM MATERIAL TO BE FURNISHED SHALL CONSIST OF SCREENED LOOSE, FRIABLE, FINE SANDY LOAM OR SANDY LOAM, AS DEFINED BY THE USDA'S SOIL CONSERVATION SERVICE IN THE SOIL SURVEY MANUAL ISSUED IN 1993, FREE OF SUBSOIL, REFUSE, STUMPS, ROOTS, ROCKS, COBBLES, STONES, BRUSH, NOXIOUS WEEDS, LITTER AND OTHER MATERIALS WHICH ARE LARGER THAN ½-INCH IN ANY DIMENSION AND WHICH WILL PREVENT THE FORMATION OF A SUITABLE SEED BED. ORGANIC MATTER SHALL CONSTITUTE NOT LESS THAN 5 PERCENT NOR MORE THAN 20 PERCENT OF THE LOAM AS DETERMINED BY LOSS-ON-IGNITION OF OVEN DRIED SAMPLES THAT HAVE BEEN DRAWN BY THE ENGINEER, UNLESS OTHERWISE SPECIFIED OR DIRECTED. THE LOAM SHALL HAVE AN ACIDITY RANGE OF 5.5 PH TO 7.6 PH.
2. LOAM MOVED DURING THE COURSE OF CONSTRUCTION SHALL BE RETAINED AND DISTRIBUTED WITHIN THE SITE IN ACCORDANCE WITH THE LANDSCAPE PLAN. STOCKPILED LOAM SHALL NOT BE MIXED WITH ANY SUBSOIL OR UNSUITABLE MATERIAL. ALL EXISTING LOAM REMAINS THE PROPERTY OF THE OWNER.
3. LOAM SHALL BE SPREAD TO A DEPTH OF 4" IN SEEDING AREAS AND PLACED TRUE TO LINES AND GRADES SHOWN ON THE PLANS.
4. THE LOAMED SURFACE SHALL BE GRADED, AND ALL ROOTS, SODS, WEEDS, COBBLES OR STONES WITH ANY DIMENSION GREATER THAN 1 INCH SHALL BE REMOVED AND LEGALLY DISPOSED OF. AFTER SHAPING AND GRADING, ALL TRUCKS AND OTHER EQUIPMENT NOT REQUIRED TO PERFORM SEEDING, MULCHING OR MOWING OPERATIONS SHALL BE EXCLUDED FROM THE LOAMED AREAS.
5. LIME (GROUND OR PELLETIZED) SHALL BE APPLIED DRY AND SPREAD EVENLY OVER THE ENTIRE SURFACE TO BE SEEDED. UNLESS OTHERWISE SPECIFIED, THE APPLICATION RATE SHALL BE 1 TON PER ACRE. RAKING SHALL BE COMPLETED AFTER THE FERTILIZER HAS BEEN APPLIED.
6. ALL SEED DELIVERED TO THE JOB SHALL BE IN CONTAINERS LABELED IN ACCORDANCE WITH PROVISIONS OF THE RHODE ISLAND SEED ACT OF 1956 (VOLUME 8, TITLE 2, CHAPTER 6) AND ITS AMENDMENTS AS PROVIDED FOR AGRICULTURAL SEED OFFERED FOR SALE. ONLY THE CURRENT YEARS SEED SHALL BE ACCEPTED.
7. SEED SHALL BE APPLIED ONLY DURING THE FOLLOWING DATES:
   SPRING SEEDING: MARCH 15 TO MAY 31.
   FALL SEEDING: AUGUST 15 TO OCTOBER 15.

6. THE CONTRACTOR SHALL WATER ALL SEEDED AREAS AND RESEED AS NECESSARY FOR A PERIOD OF 2-MONTHS OR UNTIL A HEALTH STAND OF GRASS IS ESTABLISHED AND APPROVAL HAS BEEN MADE BY THE OWNER/LANDSCAPE ARCHITECT.

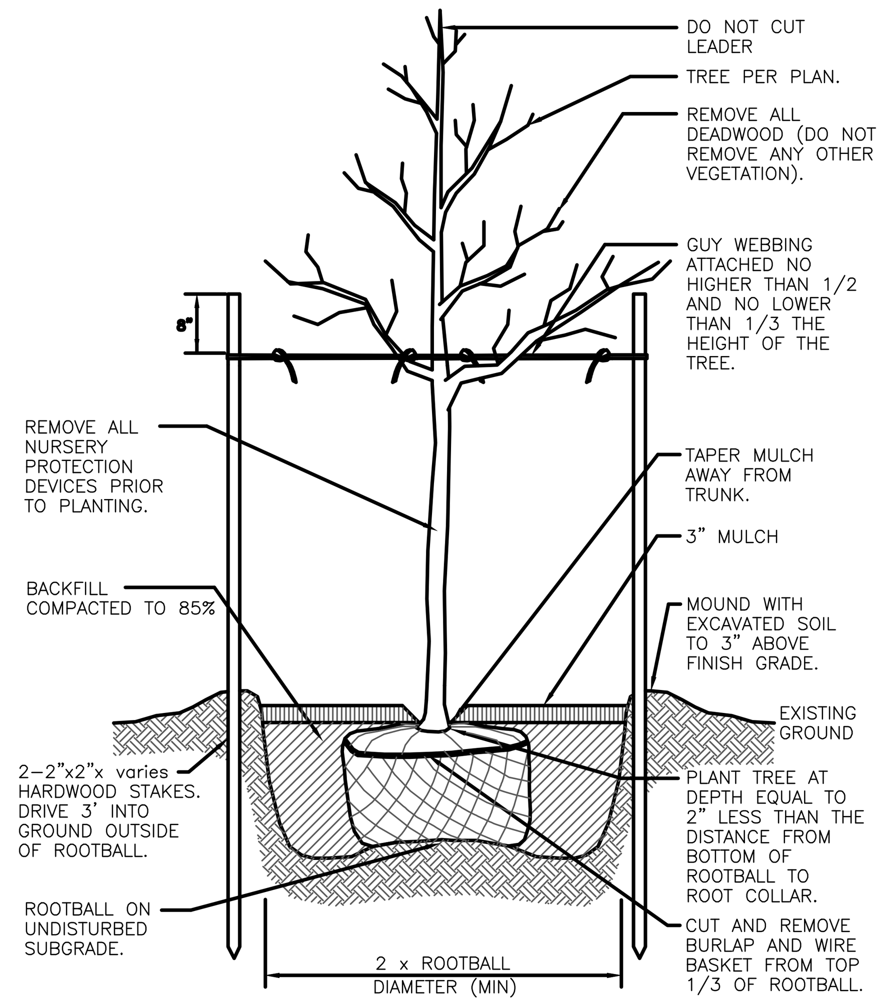

Canopy Tree Planting Detail

NOT TO SCALE

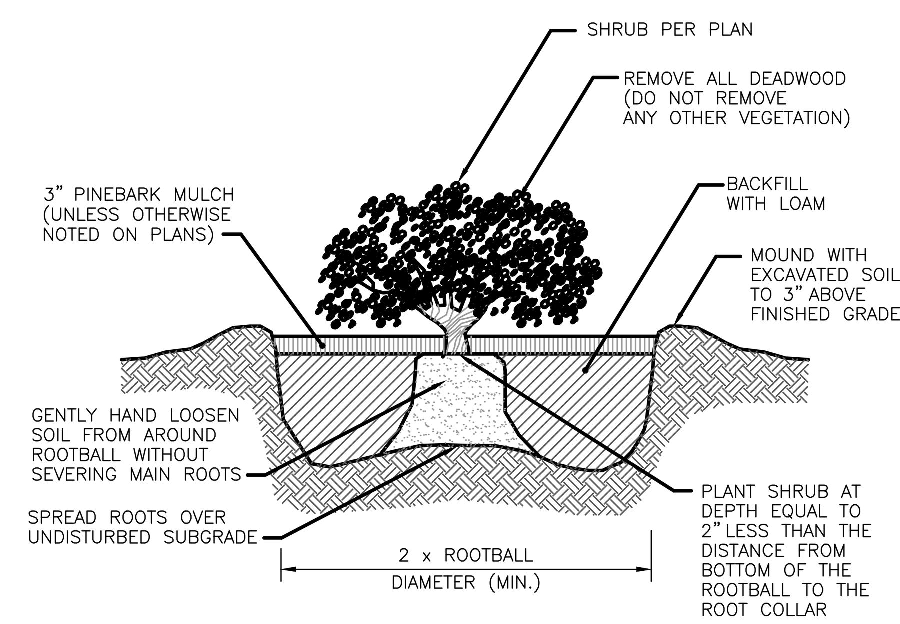

Container Grown Shrub and Perennial Planting Detaill

NOT TO SCALE

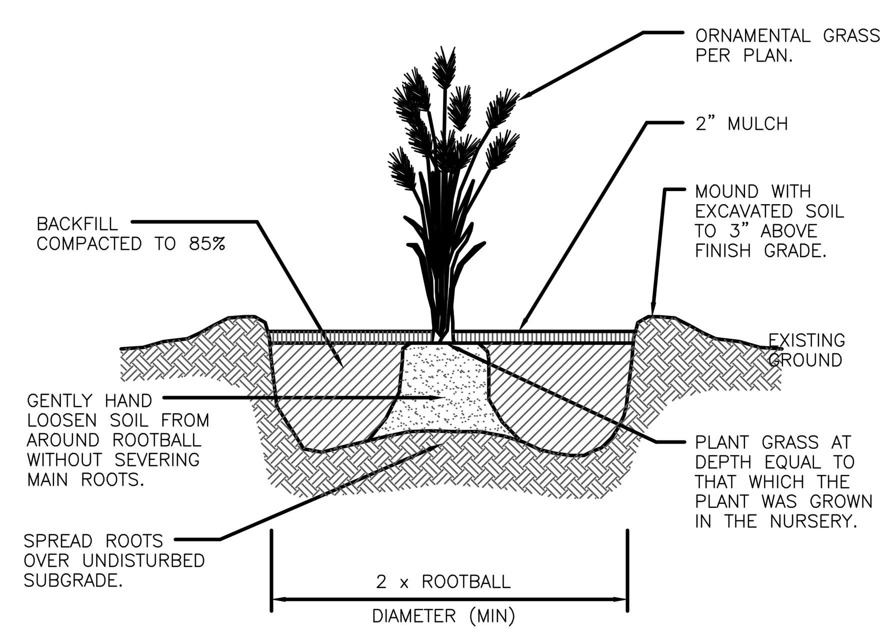

Perennial Planting Detail

NOT TO SCALE

GENERAL SEEDING MIX (L&S)

	PERCENT BY WEIGHT	PERCENT BY VOLUME
CHEWINGS FESCUE IMPROVED VARIETIES	**30**	**85**
KENTUCKY BLUEGRASS IMPROVED VARIETIES	**30**	**90**
PERENNIAL RYEGRASS IMPROVED VARIETIES	**40**	**90**

APPLICATION RATE: 200 LBS / ACRE

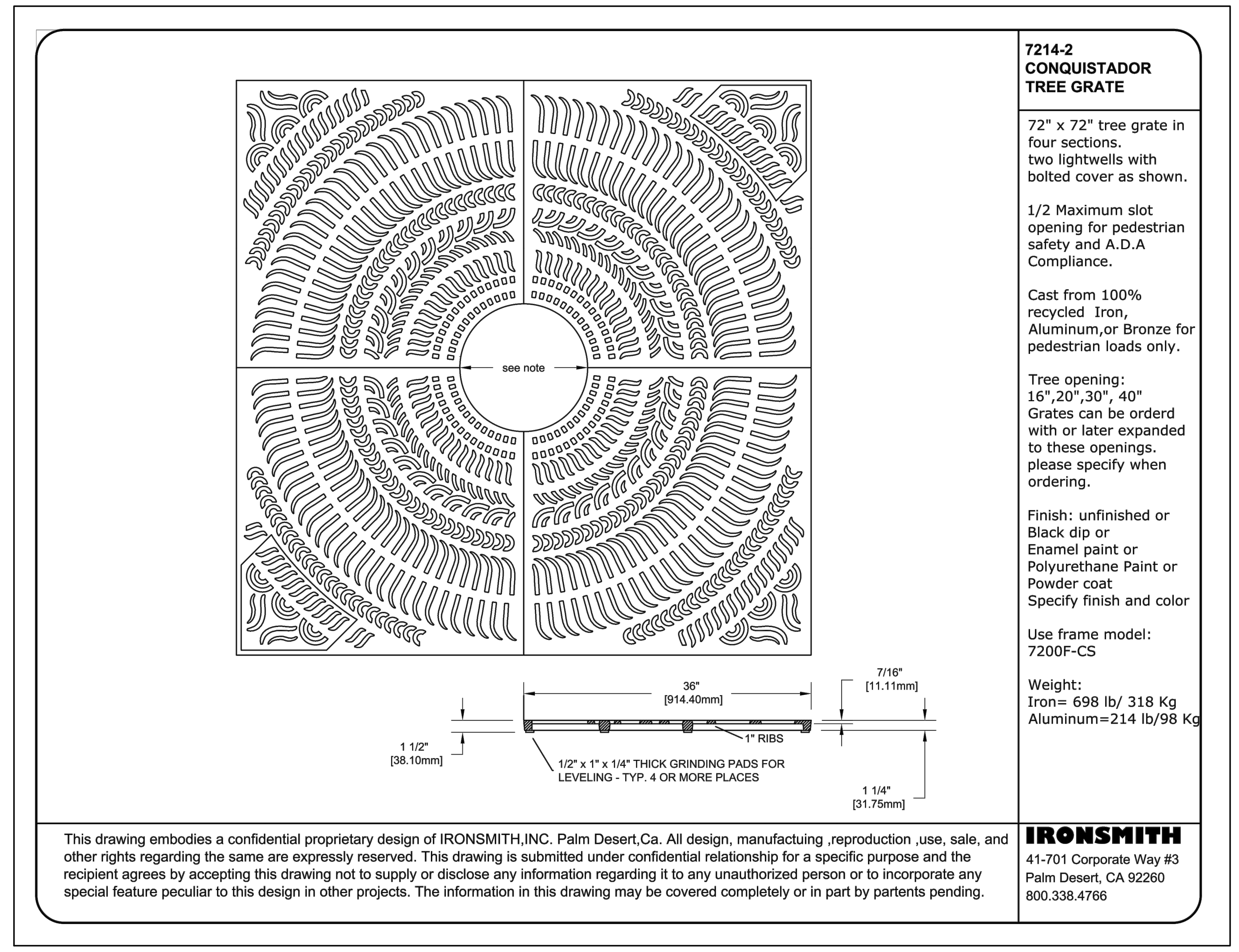

NOTE:
DETAILS INDICATED ARE FOR TYPICAL TREE GRATE (IRONSMITH, US FOUNDRY, OR APPROVED EQUAL).

Tree Grate Detail

NOT TO SCALE

PLANT LIST:

CANOPY TREES

KEY	BOTANICAL NAME / *COMMON NAME*	QTY.	SIZE	NOTE
AF	ACER X FREEMANII 'ARMSTRONG' / *FREEMAN MAPLE*	4	2"-2.5" CAL	
PA	PLATANUS ACERIFOLIA 'BLOODGOOD' / *BLOODGOO LONDON PLANETREE*	1	2"-2.5" CAL	

FLOWERING TREES

KEY	BOTANICAL NAME / *COMMON NAME*	QTY.	SIZE	NOTE
PY	PRUNUS YEDOENSIS / *YOSHINO CHERRY*	3	7'-8' CLUMP	

EVERGREEN/ DECIUOUS SHRUBS

KEY	BOTANICAL NAME / *COMMON NAME*	QTY.	SIZE	NOTE
CA	CLETHRA ALNIFOLIA 'HUMMINGBIRD' / *SWEET PEPPERBUSH*	2	#2 CONTAINER	
IG	ILEX GLABRA 'COMPACTA' / *COMPACT INKBERRY*	3	# 3 CONTAINER	
RR	ROSA 'RADCON' KNOCK OUT PINK / *PINK KNOCK OUT ROSE*	4	#3 CONTAINER	

PERENNIALS/GROUNDCOVERS/ VINES

KEY	BOTANICAL NAME / *COMMON NAME*	QTY.	SIZE	NOTE
IV	IRIS VERSICOLOR / *BLUE FLAG IRIS*	11	#2 CONTAINER	

COPLEY - CHAMBERS II
LANDSCAPE DETAILS
FOR
COPLEY - CHAMBERS II &
COPLEY - CHAMBERS III
SITUATED AT
220/228 BROAD STREET
PROVIDENCE, RI
PREPARED FOR
MARATHON DEVELOPMENT LLC

NO.	REVISION	BY	DATE

GAROFALO
GAROFALO & ASSOCIATES, INC.
CIVIL & STRUCTURAL ENGINEERS\SURVEYORS
LAND PLANNERS\ENVIRONMENTAL SCIENTISTS
85 CORLISS STREET
P.O. BOX 6145
PROVIDENCE, R.I. 02940
TEL. 401-273-6000

Garofalo & Associates ©
These drawings are the property of the engineer/surveyor and have been prepared for the owner, for this project at this site and are not to be used for any other purpose, location or owner without written consent of this owner or one of its directors.

JOB NO. 7366-00
DWG. NO. 7344-00-LAND.dwg
SCALE: AS SHOWN
DRAWN BY K.Y.Y.
CHECK BY S.S.H.
APPROVED S.B.G.
DATE: JULY 11, 2022

SHEET
L-2
2 OF 2 SHEETS

L:\7366-00 220 Broad Street (Marathon) – Providence, RI\dwg\01-Current\7366-00-LAND.dwg 07/18/2022 kyingyang 14:53

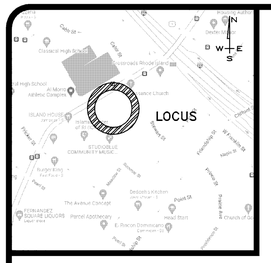

LOCUS MAP
N.T.S.

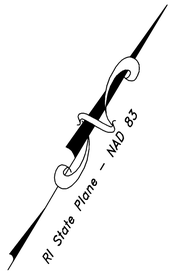

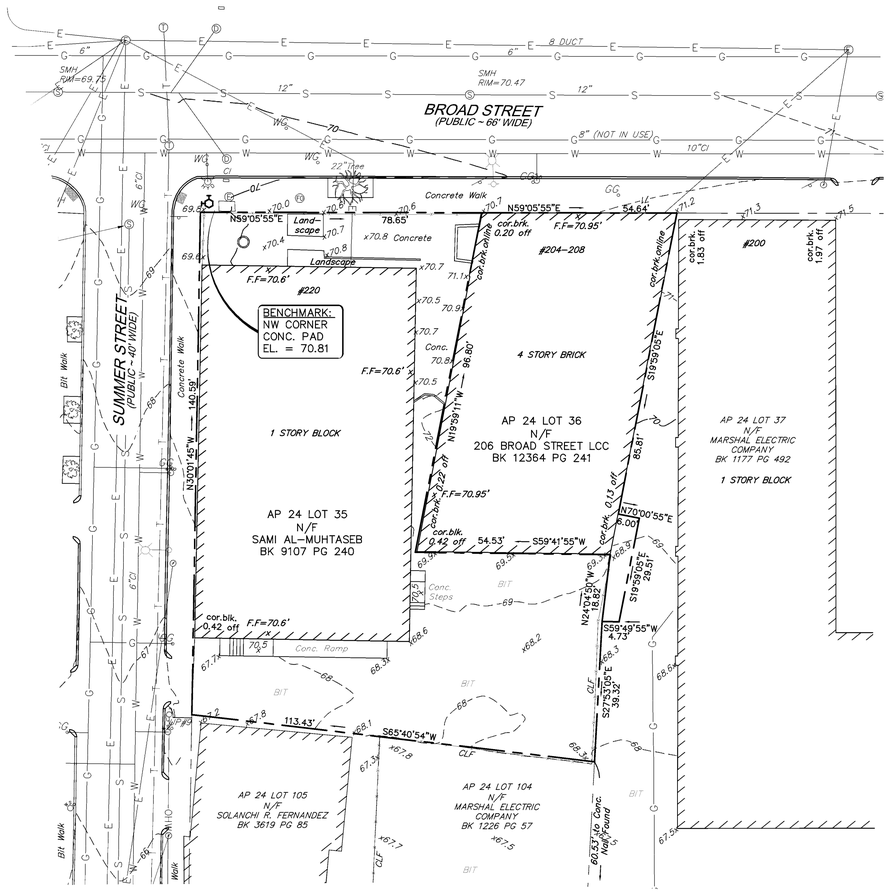

NOTES:

1. THE PROJECT SITE IS LOCATED WITHIN ZONE "X" (AREAS OUTSIDE THE 0.2% ANNUAL FLOODPLAIN) AS SHOWN ON F.E.M.A. FLOOD INSURANCE RATE MAP FOR THE CITY OF PROVIDENCE, STATE OF RHODE ISLAND, PROVIDENCE COUNTY, COMMUNITY PANEL NO. 44007C0308J, HAVING AN EFFECTIVE DATE OF 10–02–2015.

2. THE UNDERGROUND UTILITIES SHOWN HAVE BEEN LOCATED FROM FIELD SURVEY INFORMATION AND EXISTING DRAWINGS. THE SURVEYOR MAKES NO GUARANTEE THAT THE UNDERGROUND UTILITIES SHOWN COMPRISE ALL SUCH UTILITIES IN THE AREA, EITHER IN SERVICE OR ABANDONED. THE SURVEYOR FURTHER DOES NOT WARRANT THAT THE UNDERGROUND UTILITIES SHOWN ARE IN THE EXACT LOCATION INDICATED ALTHOUGH HE DOES CERTIFY THAT THEY ARE LOCATED AS ACCURATELY AS POSSIBLE FROM INFORMATION AVAILABLE. THE SURVEYOR HAS NOT PHYSICALLY LOCATED THE UNDERGROUND UTILITIES. (PLEASE CONTACT DIGSAFE PRIOR TO CONSTRUCTION @ 1–888–344–7233)

3 HORIZONTAL DATUM: RHODE ISLAND STATE PLANE – NAD 83
VERTICAL DATUM: NAVD 88*
* DATUM WAS DERIVED BY OBSERVED GPS ORTHOMETRIC HEIGHTS VARIATIONS BETWEEN LOCAL BENCHMARKS MAY APPLY.

4. THERE WERE NO WETLANDS OBSERVED ON SAID PARCELS DURING THE FIELD SURVEY.

5. THERE WERE NO ENCROACHMENTS OBSERVED ON SAID PARCEL OR BY ABUTTORS DURING THE FIELD SURVEY.

PARCEL DATA

A.P. 24, LOT 35
N/F
SAMI AL–MUHTASEB
DEED BK. 9107 / PG. 240
#220 BROAD STREET
LOT AREA:
12,607 S.F.± OR
0.29 ACRES±

PARCEL DATA

A.P. 24, LOT 36
N/F
206 BROAD STREET LLC
DEED BK. 9107 / PG. 240
#206 BROAD STREET
LOT AREA:
5,376 S.F.± OR
0.12 ACRES±

LEGEND & ABBREVIATIONS

U	UNKNOWN UTILITY LINE
E	ELECTRIC LINE
S	SEWER LINE
W	WATER LINE
G	GAS LINE
D	DRAINAGE LINE
T	TELEPHONE LINE
	ABANDONED UTILITY LINE
OHW	OVERHEAD WIRES
	LOCUS PROPERTY LINE
	ASSESSOR LINE
	BUILDING SETBACK LINE
	CHAIN LINK FENCE
U UMH	UNKNOWN MANHOLE
S SMH	SEWER MANHOLE
D DMH	DRAIN MANHOLE
E EMH	ELECTRIC MANHOLE
E EHH	ELECTRIC HANDHOLE
W WHM	WATER MANHOLE
T TMH	TELEPHONE MANHOLE
CB	CATCH BASIN
CI	CURB INLET
GG	GAS GATE
WG WSO	WATER GATE/SHUT OFF
CONC.	CONCRETE
BIT.	BITUMINOUS
N/F	NOW/FORMERLY
AP	ASSESSOR'S PLAN
INV.	INVERT
CLF	CHAIN LINK FENCE
EOP	EDGE OF PAVEMENT

ZONING DATA

C–2 GENERAL COMMERCIAL
WITHIN THE TRANSIT ORIENTED DEVELOPMENT OVERLAY
MIN. LOT SIZE: 0.00 SF.
MAX. LOT COVERAGE: 0.00
MIN. FRONTAGE: 0.00'
MIN. FRONT YARD: 0' TO 5'
MIN. SIDE YARD INTERIOR: NONE UNLESS ABUTTING RESIDENTIAL THEN 10'
COR. SIDE YARD: 0' TO 5'
MIN. REAR YARD: NONE UNLESS ABUTTING RESIDENTAL THEN 20'
MIN. BLDG. HEIGHT: 16'
MAX. BLDG. HEIGHT: 50' NOT TO EXCEED 4 STORIES

* PLEASE REFER TO ZONING REGS. FOR ADDITIONAL INFORMATION.

PLAN REFERENCES:

1. ADMINISTRATIVE SUBDIVISION, AP 29 LOTS 118 & 181 BY LOUIS CALCAGNI, JR 12/06/2010 – PLAT BOOK 84 PAGE 96.
2. PLAT OF HOUSE LOTS BELONGING TO PROVIDENCE AQUEDUCT COMPANY BY SCHUBARTH & HAINES, JULY 8, 1851 – PLAT BOOK 4 PAGE 7.
3. PLAT OF ESTATE ELI ALYSWORTH. DECEASED SHOWING PARTITION OF THE SAME BY WILLIAM O. CORNELL, HENRY COOKE AND ISAAC C. GREENE COMMISIONERS, SURVEYED AND PLATTED BY MARK W. SCHOFIELD, C.E. – PLAT BOOK 27 PAGE 5.
4. SUMMER STREET WIDENING FROM BROAD TO PINE ST., CITY ENGINEERS OFFICE STREET LINE DEPARTMENT MAY 8, 1871.
5. MAP OF SPRING ST. FROM BROAD ST. TO LOCKWOOD ST. CITY ENGINEERS OFFICE STREET LINE DEPARTMENT DEC. 8, 1926.
6. MAP OF CONDUIT STREET FROM STEWART ST. TO SUMMER ST. CITY ENGINEERS OFFICE STREET LINE DEPARTMENT APRIL 20, 1882.
7. MAP OF STEWART STREET SURVEY AND DRAWN BY WILLIAM S. HAINES CITY ENGINEERS OFFICE STREET LINE DEPARTMENT JULY, 1856.
8. PLAN OF DEXTER AVENUE (CHANGED TO WICKHAM ST DEC 7, 1899) FROM BROAD ST TO LOCKWOOD ST CITY ENGINEER'S OFFICE STREET LINE DEPARTMENT MARCH 14, 1890.

1" = 20'

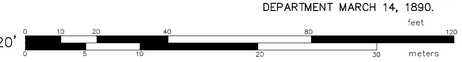

CERTIFICATION:

"To: Rhode Island Housing and Mortgage Finance Corporation, its successors and assigns, as their interest may appear, and Title Company:

This is to certify that (i) the information shown hereon has been obtained by actual transit and tape survey on the ground, that it is correct, that there are no improvements except those as shown, and that there are no encroachments either way across the property except as shown: and (ii) this map or plat and the survey on which it is based were made in accordance with the Minimum Standard Detail Requirements for ALTA/NSPS Land Title Surveys, jointly established and adopted by ALTA and NSPS, and includes items 1,2,3,4,6a,7a,8,9,10,11a,11b, 12,13,16,17, and 18 of Table A thereof. The fieldwork was completed on February 18, 2022. Pursuant to accuracy standards as adopted by ALTA and NSPS and in effect on the date of this certification. I further certify that in my professional opinion, as a land surveyor registered in the State of Rhode Island, the Relative Positional Accuracy of the survey does not exceed that which is specified therein."

By: Samuel A. White, Jr.

Print Name: Samuel A. White, Jr.
Title: Vice–President of Land Surveying
Garofalo & Associates, Inc.

CERTIFICATION:

THIS SURVEY HAS BEEN CONDUCTED AND THE PLAN HAS BEEN PREPARED PURSUANT TO SECTION 435–RICR–00–00–1.9 OF THE RULES AND REGULATIONS ADOPTED BY THE RHODE ISLAND BOARD OF REGISTRATION FOR PROFESSIONAL LAND SURVEYORS ON NOVEMBER 25, 2015, AS FOLLOWS:

TYPE OF BOUNDARY SURVEY	MEASUREMENT SPECIFICATION
COMPREHENSIVE BOUNDARY SURVEY	CLASS I

THE PURPOSE FOR THE CONDUCT OF THE SURVEY AND FOR THE PREPARATION OF THE PLAN IS AS FOLLOWS: TO PROVIDE AN ALTA/NSPS SURVEY OF LOT 68 ON ASSESSOR'S MAP 39 IN THE TOWN OF COVENTRY, RHODE ISLAND.

BY: Samuel A. White, Jr.
SAMUEL A. WHITE — LICENSE NO. 1781
LS A59–COA

EXISTING CONDITIONS SURVEY
FOR
AP 24 LOTS 35 & 36
SITUATED ON
BROAD STREET
PROVIDENCE, RHODE ISLAND
PREPARED FOR
MARATON DEVELOPMENT, LLC

NO.	REVISION		BY	DATE
1.	MISC.	REVISIONS	SAW	3/2022
2.	MISC.	REVISIONS	SAW	5/2022

SAMUEL A. WHITE, JR.
No. 1781
PROFESSIONAL
LAND SURVEYOR
03–01–2022

GAROFALO
GAROFALO & ASSOCIATES, INC.
CIVIL & STRUCTURAL ENGINEERS|SURVEYORS
LAND PLANNERS|ENVIRONMENTAL SCIENTISTS

85 CORLISS STREET
P.O. BOX 6145
PROVIDENCE, R.I. 02940
TEL. 401-273-6000

Garofalo & Associates © These documents are the property of the engineer/surveyor and have been prepared for the owner, for this project at this location. Are not to be used for any other purpose or location or another owner without written consent of this owner or one of its affiliates.

JOB NO. 7366.00	DRAWN BY RSE
DWG. NO. 7366–ECS	CALCS BY RSE
SCALE: 1"=20'	APPROVED SAW
	DATE: FEBRUARY 2022

SHEET
1
OF 1 SHEETS

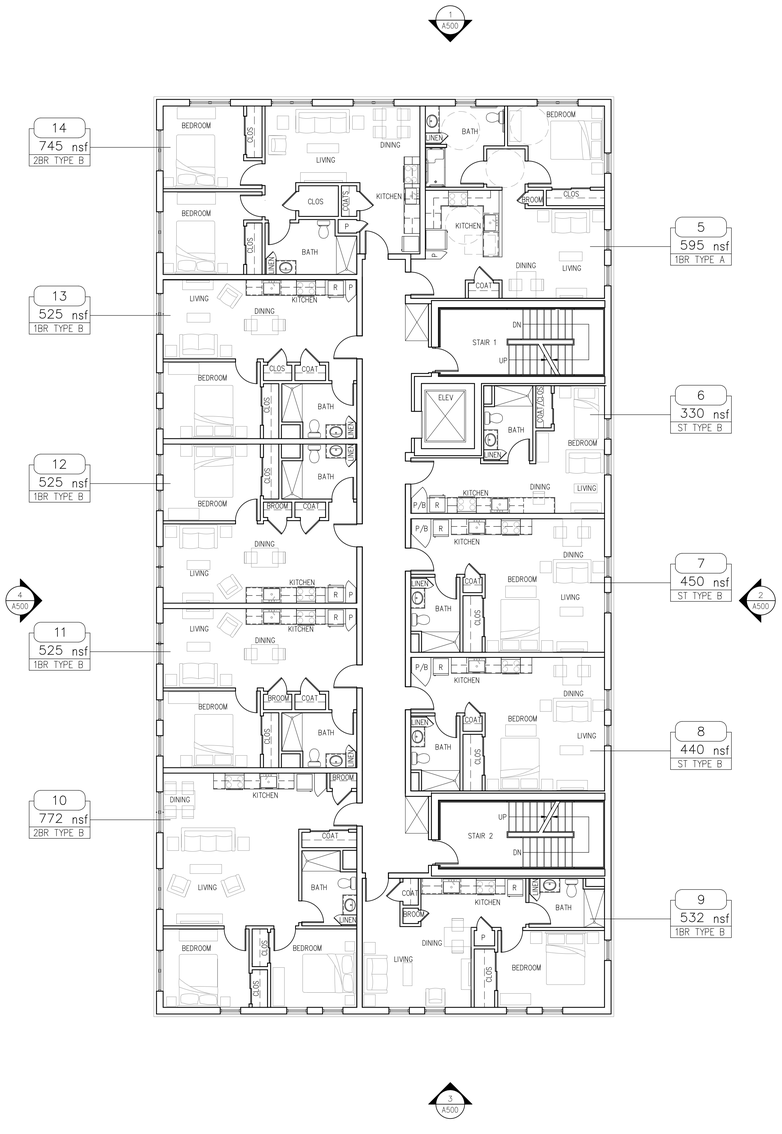

2 SECOND FLOOR PLAN (TYP OF 2-5)
SCALE: 1/8" = 1'-0"

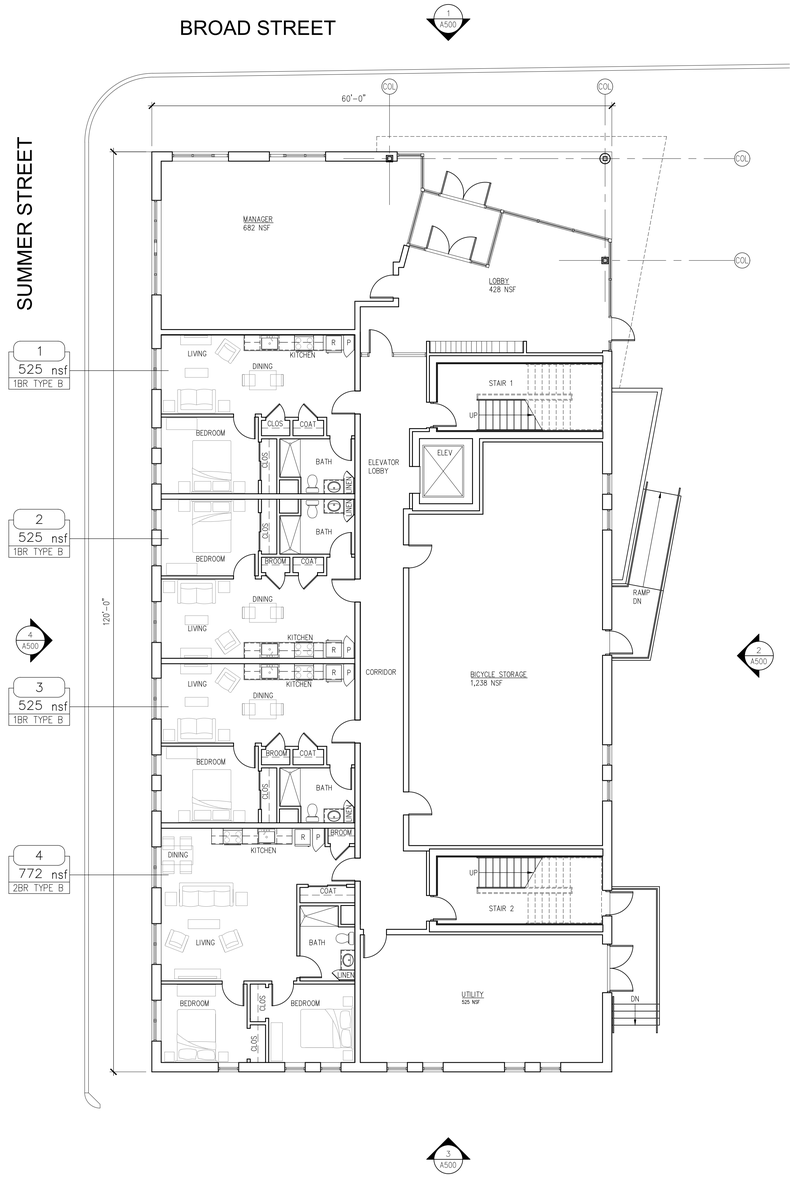

1 FIRST FLOOR PLAN
SCALE: 1/8" = 1'-0"

BRANCH
ARCHITECTS
151 BROADWAY, SUITE 250
PROVIDENCE, RI 02903
T 401 712-2881
www.brancharch.com

FOR REFERENCE ONLY NOT FOR CONSTRUCTION

COPLEY II

220 BROAD STREET
PROVIDENCE, RI 02903

MARATHON CONSTRUCTION
580 HARRISON AVE, SUITE 3A
BOSTON, MA 02118

NO	DATE	DESCRIPTION

© COPYRIGHT 2022
BRANCH ARCHITECTS, LLC
UNAUTHORIZED USE IS PROHIBITED.

DATE: 07-19-22
DRAWN BY:
JOB NO.: 2112
FILE: –

FIRST FLOOR PLAN/
SECOND FLOOR PLAN

A201

LDP SUBMISSION

1 NORTH ELEVATION
SCALE: 1/8" = 1'-0"

2 EAST ELEVATION
SCALE: 1/8" = 1'-0"

3 SOUTH ELEVATION
SCALE: 1/8" = 1'-0"

4 WEST ELEVATION
SCALE: 1/8" = 1'-0"

BRANCH
ARCHITECTS
151 BROADWAY, SUITE 250
PROVIDENCE, RI 02903
T 401 712-2881
www.brancharch.com

FOR REFERENCE ONLY NOT FOR CONSTRUCTION

COPLEY II

220 BROAD STREET
PROVIDENCE, RI 02903

MARATHON CONSTRUCTION
580 HARRISON AVE, SUITE 3A
BOSTON, MA 02118

NO	DATE	DESCRIPTION

© COPYRIGHT 2022
BRANCH ARCHITECTS, LLC
UNAUTHORIZED USE IS PROHIBITED.

DATE: 07-19-22
DRAWN BY:
JOB NO.: 2112
FILE: -

EXTERIOR ELEVATIONS

A500

LDP SUBMISSION

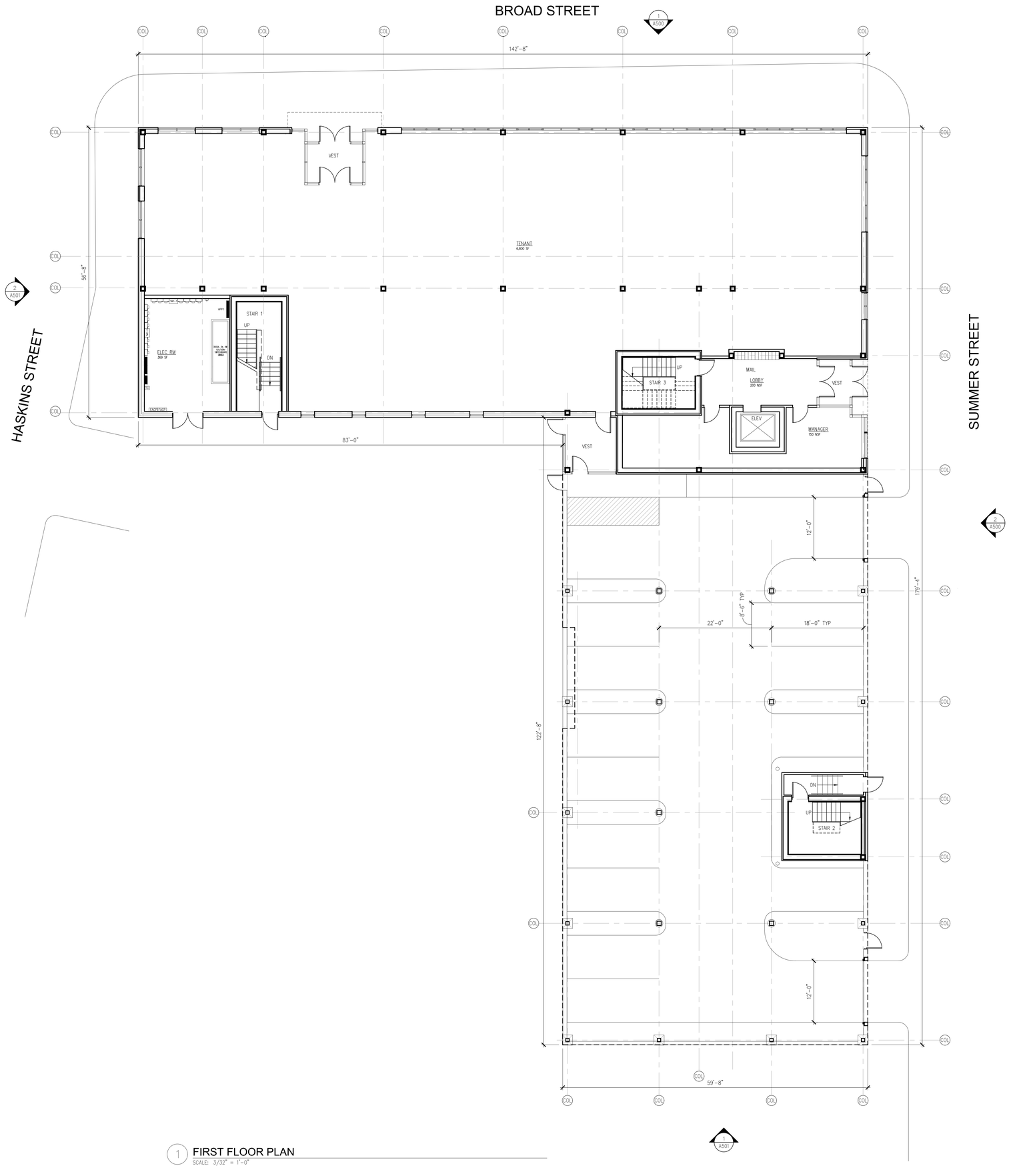

1 FIRST FLOOR PLAN
SCALE: 3/32" = 1'-0"

BRANCH
ARCHITECTS
151 BROADWAY, SUITE 250
PROVIDENCE, RI 02903
T 401 712-2881
www.brancharch.com

FOR REFERENCE ONLY NOT FOR CONSTRUCTION

COPLEY III

228 BROAD STREET
PROVIDENCE, RI 02903

MARATHON CONSTRUCTION
580 HARRISON AVE, SUITE 3A
BOSTON, MA 02118

NO	DATE	DESCRIPTION

© COPYRIGHT 2022
BRANCH ARCHITECTS, LLC
UNAUTHORIZED USE IS PROHIBITED.

DATE: 07-19-22
DRAWN BY: PAC
JOB NO.: 2112
FILE: –

FIRST FLOOR PLAN

A201

LDP SUBMISSION

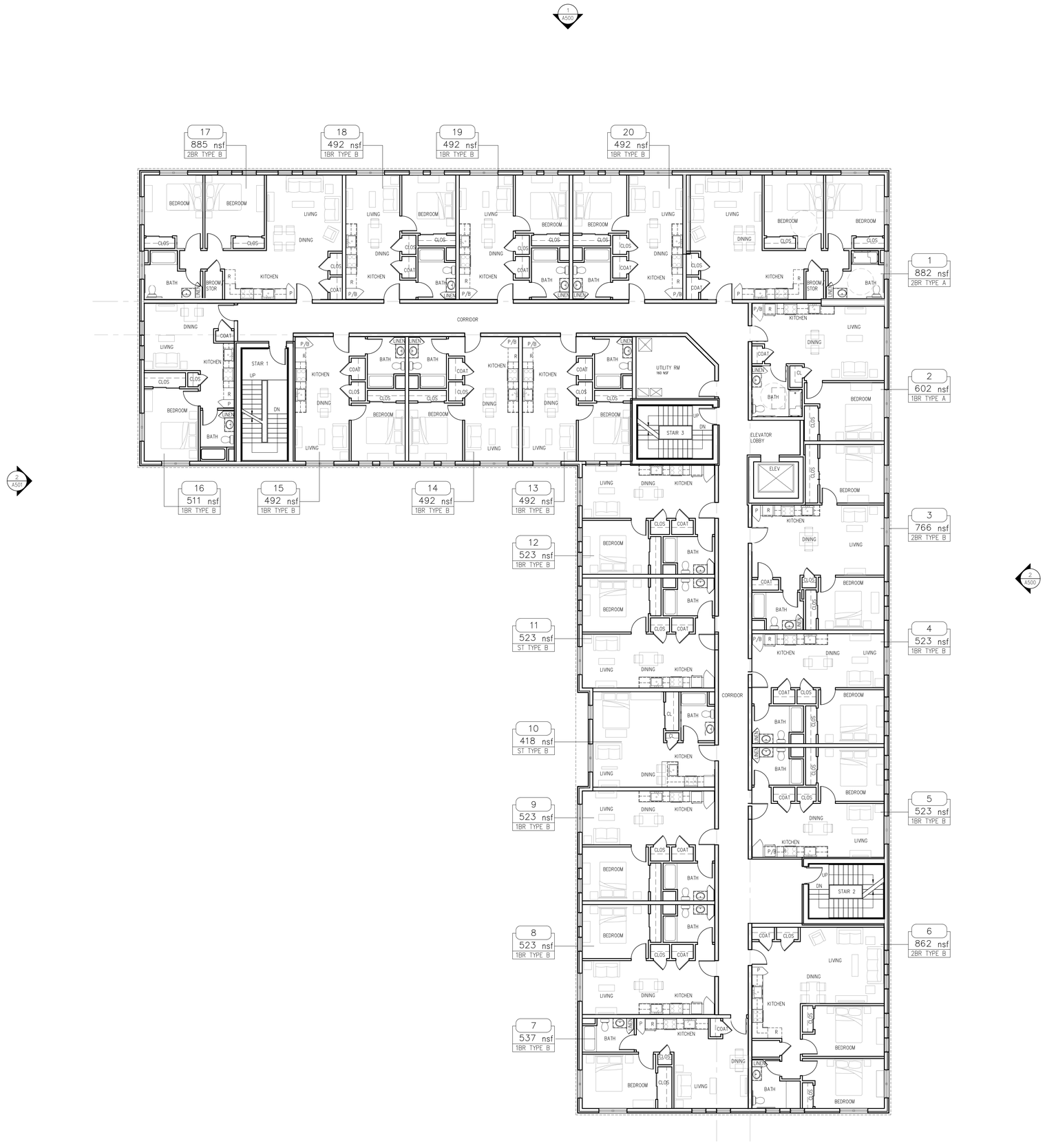

1 SECOND FLOOR PLAN (TYP OF 2-5)
SCALE: 1/8" = 1'-0"

BRANCH ARCHITECTS
151 BROADWAY, SUITE 250
PROVIDENCE, RI 02903

T 401 712-2881
www.brancharch.com

FOR REFERENCE ONLY NOT FOR CONSTRUCTION

COPLEY III

228 BROAD STREET
PROVIDENCE, RI 02903

MARATHON CONSTRUCTION
580 HARRISON AVE, SUITE 3A
BOSTON, MA 02118

NO	DATE	DESCRIPTION

© COPYRIGHT 2022
BRANCH ARCHITECTS, LLC
UNAUTHORIZED USE IS PROHIBITED.

DATE: 07-19-22
DRAWN BY: PAC
JOB NO.: 2112
FILE: -

SECOND FLOOR PLAN

A202

LDP SUBMISSION

1 NORTH ELEVATION
SCALE: 1/8" = 1'-0"

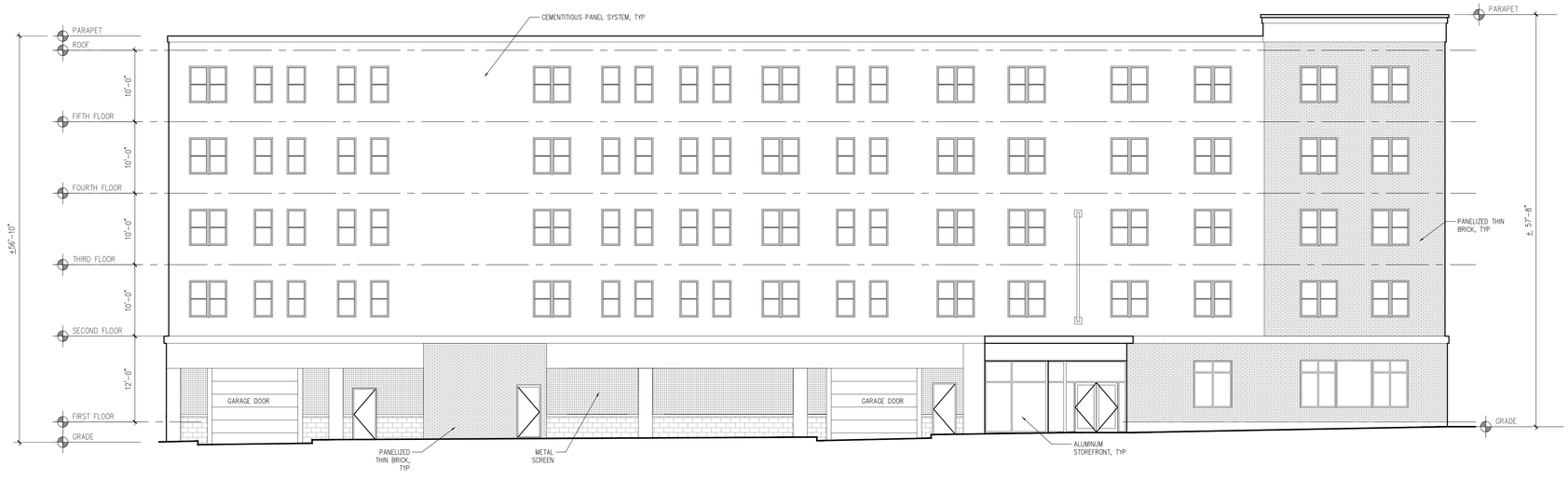

2 EAST ELEVATION
SCALE: 1/8" = 1'-0"

BRANCH
ARCHITECTS
151 BROADWAY, SUITE 250
PROVIDENCE, RI 02903
T 401 712-2881
www.brancharch.com

FOR REFERENCE ONLY NOT FOR CONSTRUCTION

COPLEY III

228 BROAD STREET
PROVIDENCE, RI 02903

MARATHON CONSTRUCTION
580 HARRISON AVE, SUITE 3A
BOSTON, MA 02118

NO	DATE	DESCRIPTION

© COPYRIGHT 2022
BRANCH ARCHITECTS, LLC
UNAUTHORIZED USE IS PROHIBITED.

DATE: 07-19-22
DRAWN BY: PAC
JOB NO.: 2112
FILE: –

EXTERIOR ELEVATIONS

A500

LDP SUBMISSION

1 SOUTH ELEVATION
SCALE: 1/8" = 1'-0"

2 WEST ELEVATION
SCALE: 1/8" = 1'-0"

BRANCH ARCHITECTS
151 BROADWAY, SUITE 250
PROVIDENCE, RI 02903
T 401 712-2881
www.brancharch.com

FOR REFERENCE ONLY NOT FOR CONSTRUCTION

COPLEY III

228 BROAD STREET
PROVIDENCE, RI 02903

MARATHON CONSTRUCTION
580 HARRISON AVE, SUITE 3A
BOSTON, MA 02118

NO	DATE	DESCRIPTION

© COPYRIGHT 2022
BRANCH ARCHITECTS, LLC
UNAUTHORIZED USE IS PROHIBITED.

DATE: 07-19-22
DRAWN BY:
JOB NO.: PAD 2112
FILE: -

EXTERIOR ELEVATIONS

A501

LDP SUBMISSION