RED PANDA EXHIBIT

RHODE ISLAND ZOOLOGICAL ASSOC.
FOR THE ROGER WILLIAMS PARK ZOO
OWNER PROJECT #: RWPZ 2022_01
1000 ELMWOOD AVENUE
PROVIDENCE, RI 02907



SPECIFICATIONS MANUAL

ARCHITECT
LDL STUDIO INC.
LDL JOB/PROJECT #: 2022-03

106 Putnam Street
Providence, RI 02909
Tel: 401.274.4516
Fax: 401.421.2631
www.ldlstudio.com

TABLE OF CONTENTS		
Division / Section #	**Specification Section Title**	**CURRENT ISSUED SECTION**
	VOLUME 1	
Div 00	**Introductory Information**	
	Cover Page	2022.11.14
	Table Of Contents	2022.11.14
Div 00	**Procurement and Contracting Requirements**	
	Substitution Request Form	2022.11.14
	Request for Proposal	2022.11.14
	Contract CIP 2022	2022.11.14
	Contract CIP 2022 Exhibits	2022.11.14
	CIP - PARTIAL LIEN - CONTRACTOR	2022.11.14
	CIP FINAL LIEN - Contractor	2022.11.14
Div 01	**General Conditions**	
01 1000	Summary	2022.11.14
01 2100	Allowances	2022.11.14
01 2500	Substitution Procedures	2022.11.14
01 2600	Contract Modification Procedures	2022.11.14
01 3100	Project Management and Coordination	2022.11.14
01 3200	Construction Progress Documentation	2022.11.14
01 3300	Submittal Procedures	2022.11.14
01 4000	Quality Requirements	2022.11.14
01 4200	References	2022.11.14
01 6000	Product Requirements	2022.11.14
01 7300	Execution	2022.11.14
01 7700	Closeout Procedures	2022.11.14

01 7701	Warranties and Bonds	2022.11.14
07 7823	Operation and Maintenance Data	2022.11.14
01 7900	Demonstration and Training	2022.11.14
Div 02	**Existing Conditions**	
02 4119	Selective Demolition	2022.11.14
Div 03	**Concrete**	
Div 04	**Masonry**	
Div 05	**Metals**	
Div 06	**Wood, Plastics, and Composites**	
06 1000	Rough Carpentry	2022.11.14
06 1600	Sheathing	2022.11.14
06 2023	Interior Finish Carpentry	2022.11.14
Div 07	**Thermal and Moisture Protection**	
07 1326	Self-Adhering Sheet Waterproofing	2022.11.14
07 2100	Thermal Insulation	2022.11.14
07 2500	Weather Barriers	2022.11.14
07 2600	Vapor Retarders	2022.11.14
07 3113	Asphalt Shingles	2022.11.14
07 4623	Composite Siding	2022.11.14
07 6200	Sheet Metal Flashing and Trim	2022.11.14
07 9200	Joint Sealants	2022.11.14
Div 08	**Openings**	
08 1113	Hollow Metal Doors and Frames	2022.11.14
08 3113	Access Doors and Frames	2022.11.14
08 5413	Fiberglass Fixed Frame Windows	2022.11.14
08 7100	Door Hardware	2022.11.14
08 8000	Glazing	2022.11.14
Div 09	**Finishes**	
09 2216	Non-Structural Metal Framing	2022.11.14

09 6513	Resilient Base and Accessories	2022.11.14
09 6516	Resinous Flooring	2022.11.14
09 2900	Gypsum Board	2022.11.14
09 7700	Fiberglass Reinforced Wall Panels	2022.11.14
09 9113	Exterior Painting	2022.11.14
09 9123	Interior Painting	2022.11.14
Div 10	**Specialties**	
10 1400	Signage	2022.11.14
10 2600	Wall and Door Protection	2022.11.14
10 4413	Fire Protection Cabinets	2022.11.14
10 4416	Fire Extinguishers	2022.11.14
Div 11	**Equipment**	
Div 12	**Furnishings**	
12 2413	Roller Window Shades	2022.11.14
Div 13	**Special Construction**	
Div 14	**Conveying Equipment**	

End of Table of Contents

SUBSTITUTION REQUEST
(After the Bidding/Negotiating Phase)

Project: _____ Substitution Request Number: _____

_____ From: _____

To: _____ Date: _____

_____ A/E Project Number: _____

Re: _____ Contract For: _____

Specification Title: _____ Description: _____

Section: _____ Page: _____ Article/Paragraph: _____

Proposed Substitution: _____

Manufacturer: _____ Address: _____ Phone: _____

Trade Name: _____ Model No.: _____

Installer: _____ Address: _____ Phone: _____

History: ☐ New product ☐ 1-4 years old ☐ 5-10 years old ☐ More than 10 years old

Differences between proposed substitution and specified product: _____

_____

_____

☐ Point-by-point comparative data attached — REQUIRED BY A/E

Reason for not providing specified item: _____

_____

Similar Installation:

Project: _____ Architect: _____

Address: _____ Owner: _____

_____ Date Installed: _____

Proposed substitution affects other parts of Work: ☐ No ☐ Yes; explain _____

_____

Savings to Owner for accepting substitution: _____ ($ _____).

Proposed substitution changes Contract Time: ☐ No ☐ Yes [Add] [Deduct] _____ days.

Supporting Data Attached: ☐ Drawings ☐ Product Data ☐ Samples ☐ Tests ☐ Reports ☐ _____

© Copyright 2013, CSI,
110 S. Union St., Suite 100, Alexandria, VA 22314

Form Version: September 2013
CSI Form 13.1A

BOARD OF CONTRACT AND SUPPLY
CITY OF PROVIDENCE, RHODE ISLAND

REQUEST FOR PROPOSALS

Item Description: **Red Panda Exhibit**

Date to be opened: **2/13/2023**

Issuing Department: **Parks Department**

QUESTIONS

- Please direct questions relative to the bidding process, how to fill out forms, and how to submit a bid (Pages 1-8) to the Purchasing Department.
    - Email: purchasing@providenceri.gov
        - Please use the subject line "**RFP Question**"
- Please direct questions relative to the Minority and Women's Business Enterprise Program and the corresponding forms (Pages 9-13) to the MBE/WBE Outreach Director for the City of Providence, Grace Diaz
    - Phone: (401) 680-5766
    - Email: gdiaz@providenceri.gov
        - Please use subject line "**MBE WBE Forms**"
- Please direct questions relative to the specifications outlined (beginning on page 14) to the issuing department's subject matter expert:
    - Ron Patalano
    - rpatalano@rwpzoo.org

Pre-bid Conference (Non-Mandatory)
Pre-Bid Conference – Tuesday, January 31, 2023 @ 10:00 AM
Roger Williams Park – Zoo Main Gate
1000 Elmwood Ave., Providence, RI 02905



BOARD OF CONTRACT AND SUPPLY
CITY OF PROVIDENCE, RHODE ISLAND

INSTRUCTIONS FOR SUBMISSION

Bids may be submitted up to **2:15 P.M.** on the above meeting date at the **Department of the City Clerk. Room 311, City Hall. 25 Dorrance Street, Providence.** At 2:15 P.M. all bids will be publicly opened and read at the Board of Contract Meeting in the City Council Chambers, on the 3rd floor of City Hall.

- Bidders must submit **2 copies** of their bid in sealed envelopes or packages labeled with the captioned **Item Description** and the **City Department to which the RFP and bid are related and must include the company name and address on the envelope as well**. (On page 1).
- If required by the Department, please keep the original bid bond and check in only one of the envelopes.
- Communications to the Board of Contract and Supply that are not competitive sealed bids (i.e. product information/samples) should have "**NOT A BID**" written on the envelope or wrapper.
- Only use form versions and templates included in this RFP. If you have an old version of a form do not recycle it for use in this bid.
- The bid envelope and information relative to the bid must be addressed to:

Board of Contract and Supply
Department of the City Clerk – City Hall, Room 311
25 Dorrance Street
Providence, RI 02903

****PLEASE NOTE: This bid may include details regarding information that you will need to provide (such as proof of licenses) to the issuing department before the formalization of an award.**

This information is NOT requested to be provided in your initial bid by design.

All bids submitted to the City Clerk become public record. Failure to follow instructions could result in information considered private being posted to the city's Open Meetings Portal and made available as a public record. The City has made a conscious effort to avoid the posting of sensitive information on the City's Open Meetings Portal, by requesting that such sensitive information be submitted to the issuing department only at their request.

BOARD OF CONTRACT AND SUPPLY
CITY OF PROVIDENCE, RHODE ISLAND

BID PACKAGE CHECKLIST

Digital forms are available in the City of Providence Purchasing Department Office or online at **http://www.providenceri.gov/purchasing/how-to-submit-a-bid/**

The bid package **MUST** include the following, in this order:

- Bid Form 1: Bidder's Blank as the cover page/ 1st page (s*ee page **6** of this document*)
- Bid Form 2: Certification of Bidder as 2nd page (s*ee page **7** of this document*)
- Bid Form 3: Certificate Regarding Public Records (s*ee page **8** of this document)*
- Forms from the Minority and Women Business Enterprise Program: Based on Bidder Category. S*ee forms and instructions enclosed (pages **9-13**) or on: https://www.providenceri.gov/purchasing/minority-women-owned-business-mbewbe-procurement-program/*

***Please note: MBE/WBE forms must be completed for EVERY bid submitted and must be inclusive of ALL required signatures. Forms without all required signatures will be considered incomplete.**

- Bidder's Proposal/Packet: Formal response to the specifications outlined in this RFP, including pricing information and details related to the good(s) or service(s) being provided. Please be mindful of formatting responses as requested to ensure clarity.
- Financial Assurance, *if requested* (a*s indicated on page 5 of this document under "Bid Terms")*

All of the above listed documents are REQUIRED. (With the exception of financial assurances, which are only required if specified on page 5.)

******Failure to meet specified deadlines, follow specific submission instructions, or enclose all required documents with all applicable signatures will result in disqualification, or in an inability to appropriately evaluate bids.***

BOARD OF CONTRACT AND SUPPLY
CITY OF PROVIDENCE, RHODE ISLAND

NOTICE TO VENDORS

1. The Board of Contract and Supply will make the award to the lowest qualified and responsible bidder.
2. In determining the lowest responsible bidder, cash discounts based on preferable payment terms will not be considered.
3. Where prices are the same, the Board of Contract and Supply reserves the right to award to one bidder, or to split the award.
4. No proposal will be accepted if the bid is made in collusion with any other bidder.
5. Bids may be submitted on an "equal in quality" basis. The City reserves the right to decide equality. Bidders must indicate brand or the make being offered and submit detailed specifications if other than brand requested.
6. A bidder who is an out-of-state corporation shall qualify or register to transact business in this State, in accordance with the Rhode Island Business Corporation Act, RIGL Sec. 7-1.2-1401, et seq.
7. The Board of Contract and Supply reserves the right to reject any and all bids.
8. Competing bids may be viewed in person at the Department of the City Clerk, City Hall, Providence, immediately upon the conclusion of the formal Board of Contract and Supply meeting during which the bids were unsealed/opened. Bids may also be accessed electronically on the internet via the City's Open Meetings Portal.
9. As the City of Providence is exempt from the payment of Federal Excise Taxes and Rhode Island Sales Tax, prices quoted are not to include these taxes.
10. In case of error in the extension of prices quoted, the unit price will govern.
11. The contractor will **NOT** be permitted to: a) assign or underlet the contract, or b) assign either legally or equitably any monies or any claim thereto without the previous written consent of the City Purchasing Director.
12. Delivery dates must be shown in the bid. If no delivery date is specified, it will be assumed that an immediate delivery from stock will be made.
13. A certificate of insurance will normally be required of a successful vendor.
14. For many contracts involving construction, alteration and/or repair work, State law provisions concerning payment of prevailing wage rates apply (RIGL Sec. 37-13-1 et seq.)
15. No goods should be delivered, or work started without a Purchase Order.
16. **Submit 3 copies of the bid to the City Clerk, unless the specification section of this document indicates otherwise.**
17. Bidder must certify that it does not unlawfully discriminate on the basis of race, color, national origin, gender, gender identity or expression, sexual orientation and/or religion in its business and hiring practices and that all of its employees are lawfully employed under all applicable federal, state and local laws, rules and regulations. (See Bid Form 2.)

BOARD OF CONTRACT AND SUPPLY
CITY OF PROVIDENCE, RHODE ISLAND

BID TERMS

1. Financial assurances may be required in order to be a successful bidder for Commodity or Construction and Service contracts. If either of the first two checkboxes below is checked, the specified assurance **must accompany** a bid, or the bid will not be considered by the Board of Contract and Supply. The third checkbox indicates the lowest responsible bidder will be contacted and required to post a bond to be awarded the contract.

   a) ☐ A certified check for **$**_____ must be deposited with the City Clerk as a guarantee that the Contract will be signed and delivered by the bidder.

   b) ☒ A bid bond in the amount of **5%** per centum (%) of the proposed total price, must be deposited with the City Clerk as a guarantee that the contract will be signed and delivered by the bidder; and the amount of such bid bond shall be retained for the use of the City as liquidated damages in case of default.

   c) ☒ A performance and payment bond with a satisfactory surety company will be posted by the bidder in a sum equal to one hundred per centum (100%) of the awarded contract.

   d) ☐ No financial assurance is necessary for this item.

2. Awards will be made within **sixty (60) days of bid opening**. All bid prices will be considered firm, unless qualified otherwise. Requests for price increases will not be honored.
3. Failure to deliver within the time quoted or failure to meet specifications may result in default in accordance with the general specifications. It is agreed that deliveries and/or completion are subject to strikes, lockouts, accidents and Acts of God.

The following entry applies only for COMMODITY BID TERMS:

4. Payment for partial delivery will not be allowed except when provided for in blanket or term contracts.

The following entries apply only for CONSTRUCTION AND SERVICE BID TERMS:

5. Only one shipping charge will be applied in the event of partial deliveries for blanket or term contracts.
6. Prior to commencing performance under the contract, the successful bidder shall attest to compliance with the provisions of the Rhode Island Worker's Compensation Act, RIGL 28-29-1, et seq. If exempt from compliance, the successful bidder shall submit a sworn Affidavit by a corporate officer to that effect, which shall accompany the signed contract.
7. Prior to commencing performance under the contract, the successful bidder shall, submit a certificate of insurance, in a form and in an amount satisfactory to the City.

BOARD OF CONTRACT AND SUPPLY
CITY OF PROVIDENCE, RHODE ISLAND

BID FORM 1: Bidders Blank

1. Bids must meet the attached specifications. Any exceptions or modifications must be noted and fully explained.
2. Bidder's responses must be in ink or typewritten, and all blanks on the bid form should be completed.
3. The price or prices proposed should be stated both in **WRITING** and in **FIGURES**, and any proposal not so stated may be rejected. **Contracts exceeding twelve months must specify annual costs for each year.**
4. Bids **SHOULD BE TOTALED** so that the final cost is clearly stated (unless submitting a unit price bid), however **each item should be priced individually**. Do not group items. Awards may be made on the basis of ***total*** bid or by ***individual items***.
5. All bids **MUST BE SIGNED IN INK.**

Name of Bidder (Firm or Individual): _____

Contact Name: _____

Business Address: _____

Business Phone #: _____

Contact Email Address: _____

Agrees to bid on (Write the "Item Description" here): _____

If the bidder's company is based in a state *other than Rhode Island*, list name and contact information for a local agent for service of process that ***is located within Rhode Island*** _____

Delivery Date (if applicable): _____

Name of Surety Company (if applicable): _____

Total Amount in Writing*: _____

Total Amount in Figures*: _____

**** If you are submitting a unit price bid, please insert "Unit Price Bid"***

Use additional pages if necessary for additional bidding details.

_____

Signature of Representation

_____

Title

BOARD OF CONTRACT AND SUPPLY
CITY OF PROVIDENCE, RHODE ISLAND

BID FORM 2: Certification of Bidder
(Non-Discrimination/Hiring)

Upon behalf of_____(Firm or Individual Bidding),

I,_____(Name of Person Making Certification),

being its_____(Title or "Self"), hereby certify that:

1. Bidder does not unlawfully discriminate on the basis of race, color, national origin, gender, sexual orientation and/or religion in its business and hiring practices.
2. All of Bidder's employees have been hired in compliance with all applicable federal, state and local laws, rules and regulations.

I affirm by signing below that I am duly authorized on behalf of Bidder, on this_____day of_____20____.

_____
Signature of Representation

_____
Printed Name

BOARD OF CONTRACT AND SUPPLY
CITY OF PROVIDENCE, RHODE ISLAND

BID FORM 3: Certificate Regarding Public Records

Upon behalf of_____ (Firm or Individual Bidding),

I,_____(Name of Person Making Certification),

being its_____(Title or "Self"), hereby certify an

understanding that:

1. All bids submitted in response to Requests for Proposals (RFP's) and Requests for Qualification (RFQ's), documents contained within, and the details outlined on those documents become public record upon receipt by the City Clerk's office and opening at the corresponding Board of Contract and Supply (BOCS) meeting.
2. The Purchasing Department and the issuing department for this RFP/RFQ have made a conscious effort to request that sensitive/personal information be submitted directly to the issuing department and only at request if verification of specific details is critical the evaluation of a vendor's bid.
3. The requested supplemental information may be crucial to evaluating bids. Failure to provide such details may result in disqualification, or an inability to appropriately evaluate bids.
4. If sensitive information that has not been requested is enclosed or if a bidder opts to enclose the defined supplemental information prior to the issuing department's request in the bidding packet submitted to the City Clerk, the City of Providence has no obligation to redact those details and bears no liability associated with the information becoming public record.
5. The City of Providence observes a public and transparent bidding process. Information required in the bidding packet may not be submitted directly to the issuing department at the discretion of the bidder in order to protect other information, such as pricing terms, from becoming public. Bidders who make such an attempt will be disqualified.

I affirm by signing below that I am duly authorized on behalf of Bidder, on

this_____day of_____20____.

_____

Signature of Representation

_____

Printed Name

BOARD OF CONTRACT AND SUPPLY
CITY OF PROVIDENCE, RHODE ISLAND

WBE/MBE Form Instructions

The City of Providence actively seeks Minority and Women business enterprises to participate in bids to meet the City's procurement needs. Pursuant to the City of Providence Code of Ordinances, Chapter 21, Article II, Sec. 21-52 (Minority and Women's Business Enterprise) and Rhode Island General Laws (as amended), Chapter 31-14, et seq. (Minority Business Enterprise), Minority Business Enterprise (MBE) and Women's Business Enterprise (WBE) participation goals apply to contracts.

The goal for Minority Business Enterprise (MBE) participation is **10%** of the total bid value.
The goal for Women's Business Enterprise (WBE) participation is **10%** of the total bid value.
The goal for combined MBE/WBE participation is **20%** of the total bid value.

Only businesses certified with the State of Rhode Island as minority and/or women business enterprises are counted towards the City's goals. Eligible minority or women-owned businesses are encouraged to seek certification from the State of Rhode Island Minority Business Enterprise Compliance Office at: http://odeo.ri.gov/offices/mbeco/

Note: MBE certification with the State of Rhode Island on the basis of Portuguese heritage is not currently recognized by the City of Providence's MBE program.

Bid Requirements:

All Bidders: All bidders **must complete and submit the *MBE/WBE Participation Affidavit*** indicating whether or not they are a state-certified MBE/WBE and acknowledging the City's participation goals. Submission of this form is **required with every bid**. **Your bid will not be accepted without an affidavit**.

Bidders who will be subcontracting: In addition to the MBE/WBE Participation Affidavit, Bidders who will be subcontracting must submit the ***Subcontractor Disclosure Form*** as part of their bid submission. All subcontractors, regardless of MBE/WBE status, must be listed on this form. Business NAICS codes can be found at https://www.naics.com/search/. Awarded bidders are required to submit

Subcontractor Utilization and Payment Reports with each invoice.

Waiver Requests:

a) If the percentage of the total amount of the bid being awarded to MBE or WBE vendors is less than 20% (Box F on the Subcontractor Disclosure Form) and the prime contractor is not a Rhode Island State-certified MBE or WBE, the Bidder must complete the *MBE/WBE Waiver Request Form* for review.

b) If the prime contractor company has the capacity to perform the whole project, the City of Providence requires the contractor to meet the city's goal of a combined 20% of MBE and WBE participation.

c) If the contractor is a nonprofit organization, the City of Providence requires the nonprofit organization to provide the *MBE/WBE Participation Affidavit Form* and proof of its nonprofit status.

d) If the contractor has researched the RI Certified minority list (http://odeo.ri.gov/offices/mbeco/mbe-wbe.php) and the state does not have any companies in the desired trade, the City of Providence requires the contractor to provide the *MBE/WBE Participation Affidavit Form*.

e) Waivers will be considered for approval on a case-by-case basis.

Verifying MBE/WBE Certification

It is the responsibility of the bidder to confirm that every MBE or WBE named in a proposal and included on a contract is certified by the Rhode Island Minority Business Enterprise Compliance Office. The current MBE/WBE directory is available at the State of RI MBE Office, One Capitol Hill, 2nd Floor, Providence, RI, or online at http://odeo.ri.gov/offices/mbeco/mbe-wbe.php. You can also call (401) 574-8670 to verify certification, expiration dates, and services that the MBE/WBE is certified to provide. Note: MBE certification with the State of Rhode Island on the basis of Portuguese heritage is not currently recognized by the City of Providence's MBE program.

Form Instructions:

Access all bid forms from http://www.providenceri.gov/oeo/ or http://www.providenceri.gov/purchasing/minority-women-owned-business-mbewbe-procurement-program/. Download the forms as blank PDFs. Once saved on your computer, fill them out using the Adobe program. The fillable PDFs must be completed in Adobe in order to be saved property. Google Chrome and similar platforms do not allow for the forms to be saved as filled PDFs. Therefore, please download the blank forms to your computer, then fill them out and save.

Assistance with Form Requirements

Examples of completed forms can be found on the City of Providence website at http://www.providenceri.gov/oeo/ or http://www.providenceri.gov/purchasing/minority-women-owned-business-mbewbe-procurement-program/.

Contract Requirements:

Prime contractors engaging subcontractors must submit the ***Subcontractor Utilization and Payment Report*** to the City Department's Fiscal Agent with every invoice and request for final payment. A copy of all forms should be sent to the MBE/WBE Outreach Director Office, Grace Diaz at gdiaz@providenceri.gov. This form is not submitted as a part of the initial bid package.

For contracts with durations of less than 3 months, this form must be submitted along with the contractor's request for final payment. The form must include all subcontractors utilized on the contract, both MBE/WBE and non- MBE/WBE, the total amount paid to each subcontractor for the given period and to date, A copy of all forms should be sent to the MBE/WBE Outreach Director Office, Grace Diaz at gdiaz@providenceri.gov. During the term of the contract, any unjustified failure to comply with the MBE/WBE participation requirements is a material breach of contract.

Questions?

For more information or for assistance with MBE/WBE Forms, contact the City of Providence MBE/WBE Outreach Director, Grace Diaz, at gdiaz@providenceri.gov or (401) 680-5766.

BOARD OF CONTRACT AND SUPPLY
CITY OF PROVIDENCE, RHODE ISLAND

MBE/WBE PARTICIPATION AFFIDAVIT

Project /Item Description (as seen on RFP):

_____
_____
_____

Prime Bidder: _____Contact Email and Phone_____
Company Name, Address and Trade: _____

_____

_____

Which one of the following describes your business' status in terms of Minority and/or Woman-Owned Business Enterprise certification with the State of Rhode Island? _____MBE _____WBE _____Neither MBE nor WBE

By initialing the following sections and signing the bottom of this document in my capacity as the contractor or an authorized representative of contractor, I make this Affidavit:
It is the policy of the City of Providence that minority business enterprises (MBEs) and women business enterprises (WBEs) should have the maximum opportunity to participate in procurements and projects as prime contractors and vendors. Pursuant to Sec. 21-52 of the Providence Code of Ordinances and Chapter 31-14 *et seq*. of the Rhode Island General Laws (as amended), MBE and WBE participation goals apply to contracts.

The goal for Minority Business Enterprise (MBE) participation is 10% of the total bid value.
The goal for Women's Business Enterprise (WBE) participation is 10% of the total bid value.
The goal for combined MBE/WBE participation is 20% of the total bid value.

I acknowledge the City of Providence's goals of supporting MBE/WBE certified businesses. Initial _____
If awarded the contract, I understand that my company must submit to the Minority and Women's Business Coordinator at the City of Providence (MBE/WBE Office), copies of all executed agreements with the subcontractor(s) being utilized to achieve the participation goals and other requirements of the RI General Laws. **I understand that these documents must be submitted prior to the issuance of a notice to proceed**. Initial _____

I understand that, if awarded the contract, my firm must submit to the MBE/WBE Office canceled checks and reports required by the MBE/WBE Office on a quarterly basis verifying payments to the subcontractors(s) utilized on the contract.
Initial _____

If I am awarded this contract and find that I am unable to utilize the subcontractor(s) identified in my Statement of Intent, I understand that I must substitute another certified MBE and WBE firm(s) to meet the participation goals. **I understand that I may not make a substitution until I have obtained the written approval of the MBE/WBE Office**.
Initial _____
If awarded this contract, I understand that authorized representatives of the City of Providence may examine the books, records and files of my firm from time to time, to the extent that such material is relevant to a determination of whether my firm is complying with the City's MBE/WBE participation requirements.
Initial _____
I do solemnly declare and affirm under the penalty of perjury that the contents of the foregoing Affidavit are true and correct to the best of my knowledge, information, and belief.

_____ _____
Signature of Bidder Printed Name

_____ _____
Company Name Date

BOARD OF CONTRACT AND SUPPLY

CITY OF PROVIDENCE, RHODE ISLAND

SUBCONTRACTOR DISCLOSURE FORM

Fill out this form only if you WILL SUBCONTRACT with other parties. If you will not subcontract any portion of the proposed bid, do not fill out this form.

Prime Bidder: _____ Primary NAICS_____ Code:_____

Item Description (as seen on RFP): _____

_____

Please list all Subcontractors below. Include the total dollar value that you propose to share with each subcontractor and the dollar amount to be subcontracted. Please check off MBE and WBE where applicable. The directory of all state-certified MBE/WBE firms is located at www.mbe.ri.gov. Business NAICS codes can be found at https://www.naics.com/search/

Proposed Subcontractor	**MBE**	**WBE**	**Primary NAICS Code**	**Date of Mobilization**	**$ Value of Subcontract**
					$
					$
					$
					$
					$
A. MBE SUBCONTRACTED AMOUNT:					**$**
B. WBE SUBCONTRACTED AMOUNT:					**$**
C. NON-MBE WBE SUBCONTRACTED AMOUNT:					**$**
D. DOLLAR AMOUNT OF WORK DONE BY THE PRIME CONTRACTOR:					**$**
E. TOTAL AMOUNT OF BID (SUM OF A, B, C, & D):					**$**
F. PERCENTAGE OF BID SUBCONTRACTED TO MBEs AND WBEs. (Divide the sum of A and B by E and multiply result by 100).					**%**

Please read and initial the following statement acknowledging you understand. If the percentage of the total amount of the bid being awarded to MBE or WBE vendors is less than 20% (Box (F) and the prime contractor is NOT a Rhode Island State-certified MBE or WBE, **you must fill out the MBE/WBE WAIVER REQUEST FORM for consideration by City of Providence MBE/WBE Outreach Director**. Initial _____Required

_____ _____

Signature of Bidder Printed Name

BOARD OF CONTRACT AND SUPPLY
CITY OF PROVIDENCE, RHODE ISLAND

MBE/WBE Waiver Request Form

Fill out this form only if you did not meet the 20% MBE/WBE participation goal.
State-certified MBE or WBE Prime Bidders are NOT REQUIRED to fill out this form.

Submit this form to the City of Providence MBE/WBE Outreach Director, Grace Diaz, at mbe-wbe@providenceri.gov, for review **prior to bid submission.** This waiver applies only to the current bid which you are submitting to the City of Providence and does not apply to other bids your company may submit in the future. **In case a waiver is need it City Department Directors should not** recommend a bidder for award if this form is not included, absent or is not signed by the city of Providence MBE/WBE director**.**

Prime Bidder: _____ Contact Email and Phone_____
Company Name, Address: _____ Trade _____
Project /Item Description (as seen on RFP):
_____
_____

To receive a waiver, you must list the certified MBE and/or WBE companies you contacted, the name of the primary individual with whom you interacted, and the reason the MBE/WBE company could not participate on this project.

MBE/WBE Company Name	Individual's Name	Company Name	Why did you choose not to work with this company?

I acknowledge the City of Providence's goal of a combined MBE/WBE participation is 20% of the total bid value. I am requesting a waiver of _____ % MBE/WBE (20% minus the value of **Box F** on the Subcontractor Disclosure Form). If an opportunity is identified to subcontract any task associated with the fulfillment of this contract, a good faith effort will be made to select MBE/WBE certified businesses as partners.

_____ _____ _____
Signature of Prime Contractor / or Duly Authorized Representative Printed Name
Date Signed

_____ _____ _____
Signature of City of Providence (or Designee (Only) Printed Name of City of Providence Date Signed
MBE/WBE Outreach Director MBE/WBE Outreach Director

SUPPLEMENTAL INFORMATION

If the issuing department for this RFP determines that your firm's bid is best suited to accommodate their need, you will be asked to provide proof of the following prior to formalizing an award.

An inability to provide the outlined items at the request of the department may lead to the disqualification of your bid.

This information is NOT requested to be provided in your initial bid that you will submit to the City Clerk's office by the "date to be opened" noted on page 1. This list only serves as a list of items that your firm should be ready to provide on request.

All bids submitted to the City Clerk become public record. Failure to follow instructions could result in information considered private being posted to the city's Open Meetings Portal and made available as a public record.

You must be able to provide:

- Business Tax ID will be requested after an award is approved by the Board of Contract and Supply.
- **Proof of Insurance**
- **Bid Bond and Performance and Payment Bonds**

CITY OF PROVIDENCE STANDARD TERMS & CONDITIONS

1. The terms "you" and "your" contained herein refer to the person or entity that is a party to the agreement with the City of Providence ("the City") and to such person's or entity's employees, officers, and agents.
2. The Request For Proposals ("RFP") and these Standard Terms and Conditions together constitute the entire agreement of the parties ("the Agreement") with regard to any and all matters. By your submission of a bid proposal or response to the City's RFP, you accept these Standard Terms & Conditions and agree that they supersede any conflicting provisions provided by bid or in any terms and conditions contained or linked within a bid and/or response. Changes in the terms and conditions of the Agreement, or the scope of work thereunder, may only be made by a writing signed by the parties.
3. You are an independent contractor and in no way does this Agreement render you an employee or agent of the City or entitle you to fringe benefits, workers' compensation, pension obligations, retirement or any other employment benefits. The City shall not deduct federal or state income taxes, social security or Medicare withholdings, or any other taxes required to be deducted by an employer, and this is your responsibility to yourself and your employees and agents.
4. You shall not assign your rights and obligations under this Agreement without the prior written consent of the City. Any assignment without prior written consent of the City shall be voidable at the election of the City. The City retains the right to refuse any and all assignments in the City's sole and absolute discretion.
5. Invoices submitted to the City shall be payable sixty (60) days from the time of receipt by the City. Invoices shall include support documentation necessary to evidence completion of the work being invoiced. The City may request any other reasonable documentation in support of an invoice. The time for payment shall not commence, and invoices shall not be processed for payment, until you provide reasonably sufficient support documentation. In no circumstances shall the City be obligated to pay or shall you be entitled to receive interest on any overdue invoice or payment. In no circumstances shall the City be obligated to pay any costs associated with your collection of an outstanding invoice.
6. For contracts involving construction, alteration, and/or repair work, the provisions of applicable state labor law concerning payment of prevailing wage rates (R.I. Gen. Laws §§ 37-13-1 et seq., as amended) and the City's First Source Ordinance (Providence Code of Ordinances §§ 21-91 et seq., as amended) apply.
7. With regard to any issues, claims, or controversies that may arise under this Agreement, the City shall not be required to submit to dispute resolution or mandatory/binding arbitration. Nothing prevents the parties from mutually agreeing to settle any disputes using mediation or non-binding arbitration.
8. To the fullest extent permitted by law, you shall indemnify, defend, and hold harmless the City, its employees, officers, agents, and assigns from and against any and all claims, damages, losses, allegations, demands, actions, causes of action, suits, obligations, fines, penalties, judgments, liabilities, costs and expenses, including but not limited to attorneys' fees, of any nature whatsoever arising out of, in connection with, or resulting from the performance of the work provided in the Agreement.
9. You shall maintain throughout the term of this Agreement the insurance coverage that is required by the RFP or, if none is required in the RFP, insurance coverage that is considered in your industry to be commercially reasonable, and you agree to name the City as an additional insured on your general liability policy and on any umbrella policy you carry.
10. The City shall not subject itself to any contractual limitations on liability. The City shall have the time permitted within the applicable statute of limitations, and no less, to bring or assert any and all causes of action, suits, claims or demands the City may have arising out of, in connection with, or resulting from the performance of the work provided in the Agreement, and in no event does the City agree to limit your liability to the price of the Agreement or any other monetary limit.
11. The City may terminate this Agreement upon five (5) days' written notice to you if you fail to observe any of the terms and conditions of this Agreement, or if the City believes your ability to perform the terms and conditions of this Agreement has been materially impaired in any way, including but in no way limited to loss of insurance coverage, lapsing of a surety bond, if required, declaration of bankruptcy, or appointment of a receiver. In the event of termination by the City, you shall be entitled to just and equitable compensation for any satisfactory work completed and expenses incurred up to the date of termination.

12. Written notice hereunder shall be deemed to have been duly served if delivered in person to the individual or member of the firm or entity or to an officer of the entity for whom it was intended, or if delivered at or sent by registered or certified mail to the last business address known by the party providing notice.
13. In no event shall the Agreement automatically renew or be extended without a writing signed by the parties.
14. You agree that products produced or resulting from the performance of the Agreement are the sole property of the City and may not be used by you without the express written permission of the City.
15. For any Agreement involving the sharing or exchange of data involving potentially confidential and/or personal information, you shall comply with any and all state and/or federal laws or regulations applicable to confidential and/or personal information you receive from the City, including but not limited to the Rhode Island Identity Theft Protection Act, R.I. Gen. Laws § 11-49.3-1, during the term of the Agreement. You shall implement and maintain appropriate physical, technical, and administrative security measures for the protection of, and to prevent access to, use, or disclosure of, confidential and/or personal information. In the event of a breach of such information, you shall notify the City of such breach immediately, but in no event later than twenty-four (24) hours after discovery of such breach.
16. The Agreement is governed by the laws of the State of Rhode Island. You expressly submit yourself to and agree that any and all actions arising out of, in connection with, or resulting from the performance of the Agreement or relationship between the parties shall occur solely in the venue and jurisdiction of the State of Rhode Island or the federal court located in Rhode Island.
17. The failure of the City to require performance of any provision shall not affect the City's right to require performance at any time thereafter, nor shall a waiver of any breach or default of this Agreement constitute a waiver of any subsequent breach or default or a waiver of the provision itself.
18. If any term or provision of this Agreement, or the application thereof to any person or circumstance shall, in any extent, be invalid or unenforceable, the remainder of this Agreement shall not be affected thereby, and each term and provision shall be valid and enforceable to the fullest extent permitted by law.

BOARD OF CONTRACT AND SUPPLY

CITY OF PROVIDENCE, RHODE ISLAND

BID FORM 3: Supplemental Bid Form

To whom it may concern:

1. The undersigned, having familiarized (himself) (themselves) (itself) with the **Red Panda Exhibit** bid affecting the cost of work, and with the Contract Documents (which includes the Invitation for Bids, Instructions to Bidders, Form of Bid Bond, Form of Agreements, form of Non-Collusive Affidavit, Addenda (if any), Drawings, Technical Specification, Form of Surety Bond(s); as prepared by the Providence Parks Department, and on file in the office of the City Clerk 3rd Floor, City Hall, Providence, RI 02903, hereby proposes to furnish all supervision, technical personnel, labor, materials, machinery, tools, equipment and services including utility and transportation services, and to perform such other required work for the **Red Panda Exhibit** and such other required and incidental work, complete, all in accordance with the above listed documents and for the unit prices for work in-place for the following items and quantities.

2. In submitting this Bid, the bidder understands that the right is reserved by The Providence Parks Department to reject any and all Bids, If written notice of acceptance of this Bid is mailed, telegraphed or delivered to the undersigned within (90) days after the opening thereof, or at any time thereafter before this Bid is withdrawn, the undersigned agrees to execute and deliver an Agreement in the prescribed form and furnish the required bond within (10) days after the Agreement is presented to him/her for signature.

Herewith in accordance with the instructions to Bidders.

3. Attached hereto is an affidavit in proof that the undersigned has not colluded with any person in respect to this. Bid or any bids for the Contractor for which this Bid is submitted. Also attached is a Statement of Bidder's Qualifications.

4. Application unit prices are contained in the Agreement (established as the result of either a Unit Price Bid or a Supplemental Schedule of Unit Prices), the City of Providence may order the Contractor to proceed with desired changes in the work, the value of such changes to be determined by the measured quantities involved and the application unit prices specified in the Contract.

5. The City of Providence reserves the right to determine the lowest responsible Bidder based on past experience with the City and/or recommendations by City and/or state agencies with an interest in this procurement. The City reserves the right to award the project to the appropriate bidder in the best interest of the City of Providence.

CERTIFICATION OF NON-SEGREGATED FACILITIES

The Bidder certifies that he/she does not maintain or provide for his/her employees any segregated facilities at any of his establishments, and that he/she does not permit his/her employees to perform their services at any location, under his/her control, where segregation facilities are maintained. The Bidder agrees that a breach of this certification will be a violation of the Equal Opportunity Clause in any contract resulting from acceptance of this Bid. As used in this certification, term "segregation facilities" means any waiting rooms, work rooms, rest rooms and wash rooms, restaurants and other eating areas, time clocks, locker rooms and other storage or dressing areas, parking lots, drinking fountains, recreation or entertainment areas, transportation and housing facilities provided for employee which are segregated by explicit directive or are in fact segregated on basis of race, color, religion, or national origin, because of habit, local custom, or otherwise. The Bidder agrees that (except where he/she has obtained identical certification from proposed subcontractors for specific time periods) he/she will obtain identical certification from proposed subcontractor prior to the award of subcontracts exceeding $10,000.00 which are not exempt from provisions of the Equal Opportunity Clause, and that he /she will retain such certifications in his/her files.

NOTE: The penalty for making false statements in offers is prescribed in 18 U.S.C. & 1001.

BOARD OF CONTRACT AND SUPPLY
CITY OF PROVIDENCE, RHODE ISLAND

DATE _____, 20___

Name of Bidder and Official Address:

_____

_____

_____

Name of Authorized Representative (Contact):

_____

By _____
(Signature)

Title _____

E-Mail: _____ **Phone: _____**

Bidder shall indicate, in space provided,
the earliest possible Project Start-up Date:_____, 20 _____

ADDENDA: The undersigned acknowledges receipt of the following Addenda, if any, and has included the provisions thereof in this Bid (If Any):

Addendum No.	**Date**	**Addendum No.**	**Date**
_____	_____, 20 ____	_____	_____, 20 ____
_____	_____, 20 ____	_____	_____, 20 ____

Sub-Contractors (If Any):

Name: _____ **Scope of Work:** _____**MBE / WBE**

Name: _____ **Scope of Work:** _____**MBE / WBE**

Name: _____ **Scope of Work:** _____**MBE / WBE**

ADDITIONAL INFORMATION REQUIRED WITH BID:

- Qualifications to Perform Work – See Form Below for Information Required
- Minority Participation Forms – 10% MBE / 10 % WBE Goal on this Project
- Addenda (If Any) - Must Be Acknowledged on Bid Form
- Product Information for Items Submitted as 'Or Equal' to Specified Materials

PROVISIONS OF THIS PROJECT:

- Upon the Issuance of the Award from the Board of Contract – the City shall issue a Contract to be executed by the City and the vendor incorporating the bid specifications. All Provisions of the Specifications are binding.
- Any Permits Required by the City of Providence and/or State of Rhode Island Shall be Obtained by the Vendor – Permit Fees by the City of Providence Shall be Waived – the State ADA Fee Must be Paid
- The Davis Bacon Act Applies (HUD Projects) – Prevailing Wages Must Be Paid for On Site Hours – On-Site Interviews will be Conducted During the Project – Employees Shall be Advised of the Prevailing Wage Rates Prior to Mobilization on Site
- Certified payrolls Must be Submitted With Pay Requests Including Monthly Utilizations Form
- Performance and Payment Bonds (If Required) Must be Submitted within 10 Days of Award or Bid Bond Will be Forfeited
- An Insurance Certificate Shall be Submitted to the City Within 10 Days of Award
- A Copy of the Vendors Contractor's License Must be Submitted within 10 Days of Award
- All On-Site Personnel Shall be Licensed (If Required) and Shall have Proof of All Licenses Required by the State of Rhode Island to Perform the Work Required
- Pay Requests Must be Submitted on Approved AIA Billing Documents (City will Provide if Needed)
- All Subcontractors Shall be Listed on the Bid Form – All Insurance & Payroll Requirements Apply
    - General Contractor Shall be the Insurance Certificate Holder and the City Shall be Named as 'Additionally Insured' with Respect to Liability Insurance
- A Submittal Log Must be Submitted within 10 Days of Award

CLOSE OUT DOCUMENTS:

- Prior to Final Payment the Vendor Shall Provide the Following:
  - Copies of Permits Signed off and Approved (If Any)
  - Operating Manuals and Warranties Shall Be Transferred and/or Delivered
  - Full and Completed As-Built Drawings Shall be Submitted for Approval
  - Training Shall be Provided to City Personnel (If Required)
  - Certification by Manufactures Representative (If Required)

QUALIFICATIONS:

Qualifications will be evaluated on the basis of similar project experience for:

a. Completion of at least 3 similar projects within the past five years.
b. Size and dollar value of similar completed projects.
c. Contractor's performance with similar projects. (references will be checked)
d.. Relevant experience of individuals assigned to the project.

Questions regarding this bid package shall be submitted via e-mail to **Patti Jordan** at pjordan@providenceri.gov and **Brian Byrnes, Deputy Superintendent of Parks** at bbyrnes@providenceri.gov , no later than five (5) working days before the bid opening date.

Brian Byrnes is the project contact and can be reached at 401-660-9308.

BOARD OF CONTRACT AND SUPPLY
CITY OF PROVIDENCE, RHODE ISLAND

TECHNICAL SPECIFICATIONS

This project qualifies for prevailing wages per the Prevailing Wages Statute or the Davis Bacon Act (HUD). Certified payrolls will need to be submitted to the owner for all hours worked on site for this project. The Wage Decision for this project shall be as recorded on the Bid Date and is available on the RI Department of Labor website.

Federal Labor Standards
U.S. Department of Housing & Urban Development

Applicability

The Project of Program to which the Construction work covered by this contract pertains is being assisted by the United States of America and the following Federal Labor Standards Provisions are included in this Contract pursuant to the provisions applicable to such Federal assistance.

A.1. (i) Minimum Wages. All laborers and mechanics employed or working up on the site of the work (or under the United States Housing Act of 1937 or under the Housing Act of 1949 in the construction of development of the project) will be paid unconditionally and not less often than once a week, and without subsequent deduction or rebate on any account (except such payroll deductions as are permitted by regulations issued by the Secretary of Labor under the Copeland Act (29 CFR Part 3), the full amount of wages and bona fide fringe benefits (or cash equivalents thereof) due at time of payment computed at rates not less than those contained in the wage determination of the Secretary of labor which is attached hereto and made a part hereof, regardless of any contractual relationship which may be alleged to exist between the contractor and such laborers and mechanics. Contributions made or costs reasonably anticipated for bona fide fringe benefits under Section 1(b)(2) of the Davis-Bacon Act on behalf of laborers of mechanics are considered wages paid to such laborers or mechanics, subject to the provisions of 29 CFR 5.5(a)(1)(iv); also, regular contributions made or costs incurred for more than weekly period (but not less often than quarterly) under plans, funds, or programs, which cover the particular weekly period, are deemed to be constructively made or incurred during such weekly period. Such laborers and mechanics shall be paid the appropriate wage rate and fringe benefits on the wage determination for the classification or work actually performed, without regard to skill, excepts as provided in 29 CFR Part 5.5 (a)(4). Laborers or mechanics performing work in more than one classification may be compensated at the rate specified for each classification for the time actually worked therein: Provided, that the employer's payroll records accurately set forth the time spent in each classification in which work is performed. The wage determination (including any additional classification and wage rates conformed under 29 CFT part 5.5(a)(1)(ii) and the Davis-Bacon poster (WH-1321) shall be posted at all times by the contractor and its subcontractors at the site of the work in a prominent and accessible place where it can be easily seen by the workers.

(ii) (a) Any class of laborers or mechanics which is not listed in the wage determination and which is to be employed under the contact shall be classified in conformance with the wage determination. HUD shall approve an additional classification and wage rate and fringe benefits therefore only when the following criteria have been met:

(1) The work to be performed by the classification requested is not performed by a classification in the wage determination; and

(2) The classification is utilized in the area by the construction industry; and

(3) The proposed wage rate, including any bona fide fringe benefits, bears a relationship to the wage rates contained in the wage determination.

(b) If the contractor and the laborers and mechanics to be employed in the classification (if known), or their representatives, and HUD or its designee on the classification and wage rate (including the amount designated for fringe benefits where appropriate), a report of the action taken shall be sent by HUD or its designee to the Administrator of the Wage and Hour Division, Employment Standards Administration, U.S. Department of labor, Washington, D.C. 20210. The Administrator, or an authorized representative, will approve, modify, or disapprove every additional classification action

within 30 days of receipt and so advise HUD or its designee or will notify HUD or its designee within the 30-day period that additional time is necessary. (Approved by the Office of Management and Budget under OMB control number 1215-0140.)

(c) In the event the contractor, the laborers or mechanics to be employed in the classification or their representatives, and HUD or its designee do not agree on the proposed classification and wage rate (including the amount designated for fringe benefits, where appropriate), HUD or its designee shall refer the questions, including the views of all interested parties and the recommendation of HUD or its designee to the Administrator for determination. The Administrator, or an authorized representative, will issue a determination within 30 days of receipt and so advise HUD or its designee or will notify HUD or its designee within the 30-day period that additional time is necessary. (Approved by the Office of Management and Budget under OMB Control Number 1215-0140.)

(d) The wage rate (including fringe benefits where appropriate) determined pursuant to subparagraphs (1)(b) or (c) of this paragraph, shall be paid to all workers performing work in the classification under this contract from the first day on which work is performed in the classification.

(iii) Whenever the minimum wage rate prescribed in the contract for a class of laborers or mechanics includes a fringe benefit which is not expressed as an hourly rate, the contractor shall either pay the benefit as stated in the wage determination or shall pay another bona fide fringe benefit or an hourly cash equivalent thereof.

(iv) If the contractor does not make payments to a trustee or other third person, the contractor may consider as part of the wages of any laborer or mechanic the amount of any costs reasonably anticipated in providing bona fide fringe benefits under a plan or program, Provided, That the Secretary of Labor has found, upon the written request of the contractor, that the applicable standards of the Davis-Bacon Act have been met. The Secretary of Labor may require the contractor to set aside in a separate account assets for the meeting of obligations under the plan or program. (Approved by the Office of Management and Budget under OMB Control Number 1215-0140.)

2. Withholding. HUD or its designee shall upon its own action or upon written request of an authorized representative of the Department of Labor withhold or cause to be withhold from the contractor under this contract or any other Federal contract with the same prime contractor, or any other Federally-assisted contract subject to Davis-Bacon prevailing wage requirements, which is held by the same prime contractor so much that the accrued payments or advances as may be considered necessary to pay laborers and mechanics, including apprentices, trainees and helpers, employed by the contractor or any subcontractor the full amount of wages required by the contract. In the event of failure to pay any laborer or mechanic, including any apprentice, trainee or helper, employed or working on the site of the work (or under the United States Housing Act of 1937 or under the Housing Act of 1949 in the construction or development of the project), all or part of the wages required by the contract. HUD or its designee may, after written notice to the contractor, sponsor, applicant, or owner, take such action as may be necessary to cause the suspension of any further payment, advance, or guarantee of funds until such violations have ceased. HUD or its designee may, after written notice to the contractor, disburse such amounts withheld for and on account of the contractor or subcontractor to the respective employees to whom they are due. The comptroller General shall make such disbursements in the case of direct Davis-Bacon Act contracts.

3. (i) Payrolls and basic records. Payrolls and basic record relating thereto shall be maintained by the contractor during the course of the work preserved for a period of three years thereafter for all laborers and mechanics working at the site of the work (or under the United States Housing Act of 1937, or under the Housing Act of 1949, in the construction or development of the project). Such records shall contain the name, address, and social security number of each such worker, his or her correct classification, hourly rates of wages paid (including rates of contributions or costs anticipated for bona fide fringe benefits or cash equivalents thereof of the types described in Section 1(b)(2)(B) of the Davis-Bacon Act), daily and weekly number of hours worked, deductions made and actual wages paid. Whenever the Secretary of labor has found under 29 CFR 5.5 (a)(1)(iv) that the wages of any laborer or mechanic include the amount of any costs reasonable anticipated in providing benefits under a plan or program described in Section 1(b)(2)(B) or the Davis-Bacon Act, the contractor shall maintain records which show that the commitment to provide such benefits ins enforceable, that the plan or program is financially responsible, and that the plan or program has been communicated in writing to the laborers or mechanics affected, and records which show the costs anticipated or the actual cost incurred in providing such benefits. Contractors employing apprentices or trainees under approved programs shall maintain written evidence of the registration of apprenticeship and certification of trainee programs, the registration of the apprentices and trainees, and the ratios and wage rates prescribed in the applicable programs. (Approved by the Office of Management and Budget under OMB Control Numbers 1215-0140 and 1215-0017.)

(ii) (a) The contractor shall submit weekly for each in which any contract work is performed a copy of all payrolls to HUD or its designee if the agency is a party to the contract, but if the agency is not such a party, the contractor will submit the payrolls to the applicant, sponsor or owner, as the case may be, for transmission to HUD or its designee. The payrolls submitted shall set out accurately and completely all of the information required to be maintained under 29 CFR Part 5.5(a)(3)(i). This information may be submitted in any form desired. Optional Form WH-34 is available for this purpose and may be purchases from the Superintendent of Documents (Federal Stock Number 029-005-00014-1), Government Printing Office, Washington, Dc 20402. The prime contractor is responsible for the submission of copies of payrolls by all subcontractors. (Approved by the Office of Management and Budget under OMB Control Number 1215-0149.)

(b) Each payroll submitted shall be accompanied by a "Statement of Compliance," signed by the contractor or his or her agent who pays or supervises the payment of the persons employed under the contract and shall certify the following:

(1) That the payroll for the payroll period contains the information required to be maintained under 20 CFR Part 5.5 (a)(3)(i) and that such information is correct and complete;

(2) That each laborer or mechanic (including each helper, apprentice, and trainee) employed on the contract during the payroll period has been paid the full weekly wages earned, without rebate, either directly or indirectly, and that no deductions have been made either directly or indirectly from the full wages earned, other than permissible deductions as set forth in 29 CFR Part 3;

(3) That each laborer or mechanic has been paid not less that the applicable wage rates and fringe benefits or cash equivalents for the classification of work performed, as specified in the applicable wage determination incorporated into the contract.

(c) The weekly submission of a property executed certification set forth on the reverse side of Optional Form WH-347 shall satisfy the requirement for submission of the "Statement of Compliance" required by paragraph AA.3. (ii)(b) of this section.

(d) The falsification of any of the above certifications may subject the contractor or subcontractor to civil or criminal prosecution under Section 1001 of Title 18 and Section 231 of Title 31 of the United States Code. (iii) The contractor of subcontractor shall make the records required under paragraph A.3. (i) of this section available for inspection, copying, or transcription by authorized representatives of HUD or its designee or the Department of Labor, and shall permit such representatives to interview employees during working hours on the job. If the contractor or subcontractor fails to submit the required records or to make them available, HUD or its designee may, after written notice to the contractor, sponsor, applicant, or owner, take such action as may be necessary to cause the suspension of any further payment, advance, or guarantee of funds. Furthermore, failure to submit the required records upon request or to make such records available may be grounds for debarment action pursuant to 29 CFR Part 5.12.

4. (i) Apprentices and Trainees. Apprentices. Apprentices will be permitted to work at less than the predetermined rate for the work they performed when they are employed pursuant to and individually registered in a bona fide apprenticeship program registered with the U.S. Department of Labor, Employment and Training Administration, Bureau of Apprenticeship and Training, or with a State Apprenticeship Agency recognized by the Bureau, or if a person is employed in his or her first 90 days of probationary employment as an apprentice in such an apprentice program, who is not individually registered in the program, but who has been certified by the Bureau of Apprenticeship and Training or a State Apprenticeship Agency (where appropriate) to be eligible for probationary employment as an apprentice. The allowable ratio of apprentices to journeymen on the job site in any craft classification shall not be greater than the ratio permitted to the contractor as to the entire work force under the registered program. Any worker listed on a payroll at an apprentice wage rate, who is not registered or otherwise employed as stated above, shall be paid not less than the applicable wage rate on the wage determination for the classification of work actually performed. In addition, any apprentice performing work on the job site in excess of the ratio permitted under the registered program shall be paid not less than the applicable wage rate on the age determination for the work actually performed. Where a contractor is performing construction on a project in a locality other than that in which its program is registered, the ratios and wage rates (expressed in percentages of the journeyman's hourly rate) specified in the contractor's or subcontractor's registered program shall be observed. Every apprentice must be paid at not less than the rate specified in the registered program for the apprentice's level of progress, expressed as a percentage of the journeymen hourly rate specified in the applicable wage determination. Apprentices shall be paid fringe benefits in accordance with the provisions of the apprenticeship program. If the apprenticeship program does not specify fringe benefits, apprentices must be paid the full amount of

fringe benefits listed on the wage determination for the applicable classification. If the Administrator determines that a different practice prevails for the applicable apprentice classification, fringes shall be paid in accordance with that determination. In the even the Bureau of Apprenticeship and Training, or a State Apprenticeship Agency recognized by the Bureau, withdraws approval of an apprenticeship program, the contractor will no longer be permitted to utilize apprentices at less than the applicable predetermined rate for the work performed until an acceptable program is approved.

(ii) Trainees. Except as provided in 29 CFR 5.16, trainees will not be permitted to work at less that the predetermined rate for the work performed unless they are employed pursuant to and individually registered in a program which has received prior approval, evidenced by formal certification by the U.S. Department of Labor, Employment and Training Administration. The ratio of trainees to journeymen on the job site shall not be greater than permitted under the plan approved by the Employment and Training Administration. Every trainee must be paid not less than the rate specified in the approved program for the trainee's level of progress, expressed as a percentage of the journeyman hourly rate specified in the applicable wage determination. Trainees shall be paid fringe benefits in accordance with the provisions of the trainee program. If the trainee program does not mention fringe benefits, trainees shall be paid the full amount of fringe benefits listed on the wage determination unless the Administrator of the Wage and Hour Division determines that there is an apprenticeship program associated with the corresponding journeyman wage rate on the wage determination which provides for less than full fringe benefits for apprentices. Any employee listed on the payroll at a trainee rate who is not registered and participating in a training plan approved by the Employment and Training Administration shall be paid not less than the applicable wage rate on the wage determination for the work actually performed. In addition, any trainee performing work on the job site in excess of the ratio permitted under the registered program shall be paid not less than the applicable wage rate on the wage determination for the work actually performed. In the event the Employment and Training Administration withdraws approval of a training program, the contractor will no longer be permitted to utilize trainees at less than the applicable predetermined rate for the work performed until an acceptable program is approved.

(iii) Equal employment opportunity. The utilization of apprentices, trainees and journeymen under this part shall be in conformity with the equal employment opportunity requirement of Executive Order 11246, s amended, and 29 CFR Part 30.

5. Compliance with Copeland Act requirements. The contractor shall comply with the requirements of 29 CFR Part 3, which are incorporated by reference in this contract.

6. Subcontracts. The contractor or subcontractor will insert in any subcontract the clauses contained in 29 CFR 5.5(a)(1) through (10) and such other clauses as HUD or its designee may by appropriate instructions require, and also a clause requiring the subcontractors to include these clauses in any lower tier subcontracts. The prime contractor shall be responsible for the compliance by any subcontractor or lower tier subcontractor with all contract clauses in 29 CFR Part 5.5

7. Contracts termination; debarment. A breach of the contract clauses in 29 CFR 5.5 may be grounds for termination of the contract, and for debarment as a contractor as provided in 29 CFR 5.12

8. Compliance with Davis-Bacon and Related Act Requirements. All ruling and interpretations of the Davis-Bacon and Related Act contained in 29 CFR Parts 1, 3, and 5 are herein incorporated by reference in this contract.

9. Disputes concerning labor standards. Disputes arising out of the labor standards provisions of this contract shall not be subject to the general disputes clause of this contract. Such disputes shall be resolved in accordance with the procedures of the Department of Labor set forth in 29 CFR Parts 5, 6, and 7. Disputes within the meaning of this clause include disputes between the contractor (or any of its subcontractors) and HUD or its designee, the U.S. Department of Labor, or the employees or their representatives.

10. (i) Certification of Eligibility. By entering in to this contract, the contractor certifies that neither it (nor he or she) nor any person or firm who has an interest in the contractor's firm is a person or firm ineligible to be awarded Government contracts by virtue of Section 3(a) of the Davis-Bacon Act or 29 CFR 5.12(a)(1) or to be awarded HUD contracts or participate in HUD programs pursuant to 24 CFR part 24.

(ii) No part of this contract shall be subcontracted to any person or firm ineligible for award of a Government contract by virtue of Section 3(a) of the Davis-Bacon Act of 29 CFR 5.12(a)(1) or to be awarded HUD contracts or participate in HUD programs pursuant to 24 CFR Part 24.

(iii) The penalty to making false statements is prescribed in the U.S. Criminal Code, 18 U.S.C. 1001. Additionally, U.S. Criminal Code, Section 1010, Title 18, U.S.C., "Federal Housing Administration transaction", provides in part:

"Whoever, for the purpose of …influencing in any way the action of such Administration…makes, utter of publishes any statement, knowing the same to be false…shall be fined not more than $5,000 or imprisoned not more than two years, or both."

11. Complaints, Proceedings, or Testimony by Employees. No laborer or mechanic to whom the wage, salary, or other labor standards provisions of this Contract are applicable shall be discharged or in any other manner discriminated against by the Contractor or any subcontractor because such employee has filed any complaint or instituted or caused to be instituted any proceeding or has testified or is about to testify in any proceeding under or relating to the labor standards applicable under this Contract to his employer.

B. Contract Work Hours and Safety Standards Act. As used in this paragraph, the terms "laborers" and "mechanics" include watchmen and guards.

(1) Overtime requirements. No contractor or subcontractor contracting for any part of the contract work which may require or involve the employment of laborers or mechanics shall require or permit any such laborer or mechanic in any workweek in which he or she is employed on such work to work I excess of forty hours I such workweek unless such laborer or mechanic receives compensation at a rate not less than one and one-half times the basic rate of pay for all hours worked in excess of forty hours in such workweek.

(2) Violation; liability for unpaid wages; liquidated damages. In the event of any violation of the clause set forth in subparagraph (1) or this paragraph, the contractor and any subcontractor responsible therefore shall be liable for the unpaid wages. In addition, such contractor and subcontractor shall be liable to the United States (in case of work done under contract for the District of Columbia or a territory, to such District or to such territory), for liquidated damages. Such liquidated damages shall be computed with respect to each individual laborer or mechanic, including watchmen and guards, employed in violation of the clause set forth in subparagraph (1) of this paragraph, in the sum of $25 for each calendar day on which such individual was required or permitted to work in excess of forty hours without payment of the overtime wages required by the clause set forth in subparagraph (1) of this paragraph.

(3) Withholding for unpaid wages for liquidated damages. HUD or its designees shall upon its own action or upon written request of an authorized representative of the Department of Labor withhold of cause to be withheld form any moneys payable on account of work performed by the contractor or subcontractor under any such contract or nay other Federal contract with the same prime contract, or any other Federally-assisted contract subject to the Contract Work Hours and Safety Standards Act, which is held by the same prime contractor such sums as may be determined to be necessary to satisfy any liabilities of such contractor or subcontractor for unpaid wages and liquidates damages as provided in the clause set forth in subparagraph (2) of this paragraph.

(4) Subcontracts. The contractor or subcontractor shall insert in any subcontracts the clauses set forth in subparagraph (1) through (4) of this paragraph and also a clause requiring the subcontractors to include these clauses in any lower tier subcontracts. The prime contractor shall be responsible for compliance by any subcontractor or lower tier subcontractor with the clauses set forth in subparagraphs (1) through (4) of this paragraph.

C. Health and Safety

(1) No laborer or mechanic shall be required to work in surrounding or under working conditions which are unsanitary,

hazardous, or dangerous to his health and safety as determined under construction safety and health standards

promulgated by the Secretary of Labor by regulation.

(2) The Contractor shall comply with all regulations issued by the Secretary of Labor pursuant to Title 29 Part 1926 (formerly Part 1518) and failure to comply may result in imposition of sanctions pursuant to the Contract Work Hours and Safety Standards Act (Public Law 91-54, 83 Stat. 96).

(3) The Contractor shall include the provisions of this Article in every subcontract so that such provisions will be binding on each subcontractor. The Contractor shall take such action with respect to any subcontract as the Secretary of Housing and Urban Development or the Secretary of Labor shall direct as a means of enforcing such provisions.

Questions regarding this bid shall be sent via e-mail to Brian Byrnes at bbyrnes@providenceri.gov. Questions and responses will be sent to all bidders.

"General Decision Number: RI20220001 12/23/2022

Superseded General Decision Number: RI20210001

State: Rhode Island

Construction Types: Building, Heavy (Heavy and Marine) and Highway

Counties: Rhode Island Statewide.

BUILDING CONSTRUCTION PROJECTS (does not include residential construction consisting of single family homes and apartments up to and including 4 stories) HEAVY, HIGHWAY AND MARINE CONSTRUCTION PROJECTS

Note: Contracts subject to the Davis-Bacon Act are generally required to pay at least the applicable minimum wage rate required under Executive Order 14026 or Executive Order 13658. Please note that these Executive Orders apply to covered contracts entered into by the federal government that are subject to the Davis-Bacon Act itself, but do not apply to contracts subject only to the Davis-Bacon Related Acts, including those set forth at 29 CFR 5.1(a)(2)-(60).

If the contract is entered into on or after January 30, 2022, or the contract is renewed or extended (e.g., an option is exercised) on or after January 30, 2022:	. Executive Order 14026 generally applies to the contract. . The contractor must pay all covered workers at least $15.00 per hour (or the applicable wage rate listed on this wage determination, if it is higher) for all hours spent performing on the contract in 2022.
If the contract was awarded on or between January 1, 2015 and January 29, 2022, and the contract is not renewed or extended on or after January 30, 2022:	. Executive Order 13658 generally applies to the contract. . The contractor must pay all covered workers at least $11.25 per hour (or the applicable wage rate listed on this wage determination, if it is higher) for all hours spent performing on that contract in 2022.

The applicable Executive Order minimum wage rate will be adjusted annually. If this contract is covered by one of the Executive Orders and a classification considered necessary for performance of work on the contract does not appear on this wage determination, the contractor must still submit a conformance request.

Additional information on contractor requirements and worker protections under the Executive Orders is available at https://www.dol.gov/agencies/whd/government-contracts.

Modification Number	Publication Date
0	01/07/2022
1	01/21/2022
2	02/18/2022
3	02/25/2022
4	04/01/2022
5	05/06/2022
6	05/27/2022
7	06/03/2022
8	06/24/2022
9	08/26/2022
10	09/09/2022
11	12/09/2022
12	12/16/2022
13	12/23/2022

ASBE0006-006 06/01/2022

	Rates	Fringes
HAZARDOUS MATERIAL HANDLER (Includes preparation, wetting, stripping, removal scrapping, vacuuming, bagging & disposing of all insulation materials, whether they contain asbestos or not, from mechanical systems)	$ 38.30	25.55

ASBE0006-008 09/01/2021

	Rates	Fringes
Asbestos Worker/Insulator Includes application of all insulating materials, protective coverings, coatings & finishes to all types of mechanical systems.	$ 45.00	32.89

BOIL0029-001 01/01/2021

	Rates	Fringes
BOILERMAKER	$ 45.87	29.02

BRRI0003-001 06/01/2022

	Rates	Fringes
Bricklayer, Stonemason, Pointer, Caulker & Cleaner	$ 46.86	29.14

BRRI0003-002 09/01/2022

	Rates	Fringes
Marble Setter, Terrazzo Worker & Tile Setter	$ 46.54	30.34

BRRI0003-003 09/01/2022

	Rates	Fringes

Marble, Tile & Terrazzo
Finisher.....$ 38.78 29.61

CARP0330-001 06/05/2022

	Rates	Fringes
CARPENTER (Includes Soft Floor Layer)	$ 41.46	28.82
Diver Tender	$ 40.72	28.66
DIVER	$ 53.61	28.82
Piledriver	$ 39.72	28.66
WELDER	$ 42.46	28.82

FOOTNOTES:

When not diving or tending the diver, the diver and diver tender shall receive the piledriver rate. Diver tenders shall receive $1.00 per hour above the pile driver rate when tending the diver.

Work on free-standing stacks, concrete silos & public utility electrical power houses, which are over 35 ft. in height when constructed: $.50 per hour additional.

Work on exterior concrete shear wall gang forms, 45 ft. or more above ground elevation or on setback: $.50 per hour additional.

The designated piledriver, known as the ""monkey"": $1.00 per hour additional.

CARP1121-002 01/06/2020

	Rates	Fringes
MILLWRIGHT	$ 39.07	29.15

ELEC0099-002 12/05/2022

	Rates	Fringes
ELECTRICIAN	$ 45.86	53.26%
Teledata System Installer	$ 34.40	12.10%+15.31

FOOTNOTES:

Work of a hazardous nature, or where the work height is 30 ft. or more from the floor, except when working OSHA-approved lifts: 20% per hour additional.

Work in tunnels below ground level in combined sewer outfall: 20% per hour additional.

---

* ELEV0039-001 01/01/2022

	Rates	Fringes
ELEVATOR MECHANIC	$ 56.91	36.885+a+b

FOOTNOTES:

a. PAID HOLIDAYS: New Years Day; Memorial Day; Independence

Day; Labor Day; Veterans' Day; Thanksgiving Day; the Friday after Thanksgiving Day; and Christmas Day.

b. Employer contributes 8% basic hourly rate for 5 years or more of service of 6% basic hourly rate for 6 months to 5 years of service as vacation pay credit.

ENGI0057-001 06/01/2022

	Rates	Fringes
Operating Engineer: (power plants, sewer treatment plants, pumping stations, tunnels, caissons, piers, docks, bridges, wind turbines, subterranean & other marine and heavy construction work)		
GROUP 1	$ 43.55	29.25+a
GROUP 2	$ 41.55	29.25+a
GROUP 3	$ 37.17	29.25+a
GROUP 4	$ 34.32	29.25+a
GROUP 5	$ 40.60	29.25+a
GROUP 6	$ 31.40	29.25+a
GROUP 7	$ 25.40	29.25+a
GROUP 8	$ 37.25	29.25+a
GROUP 9	$ 41.17	29.25+a

a. BOOM LENGTHS, INCLUDING JIBS:

150 feet and over + $ 2.00
180 feet and over + $ 3.00
210 feet and over + $ 4.00
240 feet and over + $ 5.00
270 feet and over + $ 7.00
300 feet and over + $ 8.00
350 feet and over + $ 9.00
400 feet and over + $10.00

a. PAID HOLIDAYS:
New Year's Day, President's Day, Memorial Day, July Fourth, Victory Day, Labor Day, Columbus Day, Veterans Day, Thanksgiving Day, Christmas Day. a: Any employee who works 3 days in the week in which a holiday falls shall be paid for the holiday.

a. FOOTNOTES:
Hazmat work: $2.00 per hour additional.
Tunnel/Shaft work: $5.00 per hour additional.

POWER EQUIPMENT OPERATORS CLASSIFICATIONS

GROUP 1: Cranes, lighters, boom trucks and derricks

GROUP 2: Digging machine, Ross Carrier, locomotive, hoist, elevator, bidwell-type machine, shot & water blasting machine, paver, spreader, graders, front end loader (3 yds. and over), vibratory hammer & vacuum truck, roadheaders, forklifts, economobile type equipment, tunnel boring machines, concrete pump and on site concrete plants.

GROUP 3: Oilers on cranes.

GROUP 4: Oiler on crawler backhoe.

GROUP 5: Bulldozer, bobcats, skid steer loader, tractor, scraper, combination loader backhoe, roller, front end loader (less than 3 yds.), street and mobile-powered sweeper (3-yd. capacity), 8-ft. sweeper minimum 65 HP).

GROUP 6: Well-point installation crew.

GROUP 7: Utility Engineers and Signal Persons

GROUP 8: Heater, concrete mixer, stone crusher, welding machine, generator and light plant, gas and electric driven pump and air compressor.

GROUP 9: Boat & tug operator.

ENGI0057-002 05/01/2022

	Rates	Fringes
Power Equipment Operator (highway construction projects; water and sewerline projects which are incidental to highway construction projects; and bridge projects that do not span water)		
GROUP 1	$ 36.70	29.25+a
GROUP 2	$ 31.40	29.25+a
GROUP 3	$ 25.40	29.25+a
GROUP 4	$ 31.98	29.25+a
GROUP 5	$ 35.68	29.25+a
GROUP 6	$ 35.30	29.25+a
GROUP 7	$ 30.95	29.25+a
GROUP 8	$ 32.33	29.25+a
GROUP 9	$ 34.28	29.25+a

a. FOOTNOTE: a. Any employee who works three days in the week in which a holiday falls shall be paid for the holiday.

a. PAID HOLIDAYS: New Year's Day, President's Day, Memorial Day, July Fourth, Victory Day, Labor Day, Columbus Day, Veterans Day, Thanksgiving Day & Christmas Day.

POWER EQUIPMENT OPERATOR CLASSIFICATIONS

GROUP 1: Digging machine, crane, piledriver, lighter, locomotive, derrick, hoist, boom truck, John Henry's, directional drilling machine, cold planer, reclaimer, paver, spreader, grader, front end loader (3 yds. and over), vacuum truck, test boring machine operator, veemere saw, water blaster, hydro-demolition robot, forklift, economobile, Ross Carrier, concrete pump operator and boats

GROUP 2: Well point installation crew

GROUP 3: Utlity engineers and signal persons

GROUP 4: Oiler on cranes

GROUP 5: Combination loader backhoe, front end loader (less than 3 yds.), forklift, bulldozers & scrapers and boats

GROUP 6: Roller,skid steer loaders, street sweeper

GROUP 7: Gas and electric drive heater, concrete mixer, light plant, welding machine, pump & compressor

GROUP 8: Stone crusher

GROUP 9: Mechanic & welder

ENGI0057-003 06/01/2022

BUILDING CONSTRUCTION

	Rates	Fringes
Power Equipment Operator		
GROUP 1	$ 42.82	29.25+a
GROUP 2	$ 40.82	29.25+a
GROUP 3	$ 40.60	29.25+a
GROUP 4	$ 36.60	29.25+a
GROUP 5	$ 33.75	29.25+a
GROUP 6	$ 39.90	29.25+a
GROUP 7	$ 39.47	29.25+a
GROUP 8	$ 36.79	29.25+a

a.BOOM LENTHS, INCLUDING JIBS:

150 ft. and over: + $ 2.00
180 ft. and over: + $ 3.00
210 ft. and over: + $ 4.00
240 ft. and over: + $ 5.00
270 ft. and over: + $ 7.00
300 ft. and over: + $ 8.00
350 ft. and over: + $ 9.00
400 ft. and over: + $10.00

a. PAID HOLIDAYS: New Year's Day, President's Day, Memorial Day, July Fourth, Victory Day, Labor Day, Columbus Day, Veterans Day, Thanksgiving Day & Christmas Day. a: Any employee who works 3 days in the week in which a holiday falls shall be paid for the holiday.

a. FOOTNOTE: Hazmat work: $2.00 per hour additional.
Tunnel/Shaft work: $5.00 per hour additional.

POWER EQUIPMENT OPERATORS CLASSIFICATIONS

GROUP 1: Cranes, lighters, boom trucks and derricks.

GROUP 2: Digging machine, Ross carrier, locomotive, hoist, elevator, bidwell-type machine, shot & water blasting machine, paver, spreader, front end loader (3 yds. and over), vibratory hammer and vacuum truck

GROUP 3: Telehandler equipment, forklift, concrete pump & on-site concrete plant

GROUP 4: Fireman & oiler on cranes

GROUP 5: Oiler on crawler backhoe

GROUP 6: Bulldozer,skid steer loaders,bobcats, tractor,

grader, scraper,combination loader backhoe, roller, front end loader (less than 3 yds.), street and mobile powered sweeper (3 yds. capacity), 8-ft. sweeper (minimum 65 hp)

GROUP 7: Well point installation crew

GROUP 8: Heater, concrete mixer, stone crusher, welding machine, generator for light plant, gas and electric driven pump & air compressor

---

IRON0037-001 09/16/2021

	Rates	Fringes
IRONWORKER	$ 38.21	30.58

LABO0271-001 05/30/2021

BUILDING CONSTRUCTION

	Rates	Fringes
LABORER		
GROUP 1	$ 33.55	26.15
GROUP 2	$ 33.80	26.15
GROUP 3	$ 34.30	26.15
GROUP 4	$ 34.55	26.15
GROUP 5	$ 35.55	26.15

LABORERS CLASSIFICATIONS

GROUP 1: Laborer, Carpenter Tender, Mason Tender, Cement Finisher Tender, Scaffold Erector, Wrecking Laborer, Asbestos Removal [Non-Mechanical Systems]

GROUP 2: Asphalt Raker, Adzemen, Pipe Trench Bracer, Demolition Burner, Chain Saw Operator, Fence & Guard Rail Erector, Setter of Metal Forms for Roadways, Mortar Mixer, Pipelayer, Riprap & Dry Stonewall Builder, Highway Stone Spreader, Pneumatic Tool Operator, Wagon Drill Operator, Tree Trimmer, Barco-Type Jumping Tamper, Mechanical Grinder Operator

GROUP 3: Pre-Cast Floor & Roof Plank Erectors

GROUP 4: Air Track Operator, Hydraulic & Similar Self-Powered Drill, Block Paver, Rammer, Curb Setter, Powderman & Blaster

GROUP 5: Toxic Waste Remover

LABO0271-002 05/30/2021

HEAVY AND HIGHWAY CONSTRUCTION

	Rates	Fringes
LABORER		
COMPRESSED AIR		
Group 1	$ 53.45	24.15
Group 2	$ 50.98	24.15
Group 3	$ 40.50	24.15
FREE AIR		
Group 1	$ 44.05	24.15

Group 2	$ 43.05	24.15
Group 3	$ 40.50	24.15
LABORER		
Group 1	$ 33.55	24.15
Group 2	$ 33.80	24.15
Group 3	$ 34.55	24.15
Group 4	$ 27.05	24.15
Group 5	$ 35.55	24.15
OPEN AIR CAISSON, UNDERPINNING WORK AND BORING CREW		
Bottom Man	$ 39.55	24.15
Top Man & Laborer	$ 38.60	24.15
TEST BORING		
Driller	$ 40.00	24.15
Laborer	$ 38.60	24.15

LABORER CLASSIFICATIONS

GROUP 1: Laborer; Carpenter tender; Cement finisher tender; Wrecking laborer; Asbestos removers [non-mechanical systems]; Plant laborer; Driller in quarries

GROUP 2: Adzeperson; Asphalt raker; Barcotype jumping tamper; Chain saw operators; Concrete and power buggy operator; Concrete saw operator; Demolition burner; Fence and guard rail erector; Highway stone spreader; Laser beam operator; Mechanical grinder operator; Mason tender; Mortar mixer; Pneumatic tool operator; Riprap and dry stonewall builder; Scaffold erector; Setter of metal forms for roadways; Wagon drill operator; Wood chipper operator; Pipelayer; Pipe trench bracer

GROUP 3: Air track drill operator; Hydraulic and similar powered drills; Brick paver; Block paver; Rammer and curb setter; Powderperson and blaster

GROUP 4: Flagger & signaler

GROUP 5: Toxic waste remover

LABORER - COMPRESSED AIR CLASSIFICATIONS

GROUP 1: Mucking machine operator, tunnel laborer, brake person, track person, miner, grout person, lock tender, gauge tender, miner: motor person & all others in compressed air

GROUP 2: Change house attendant, powder watchperson, top person on iron

GROUP 3: Hazardous waste work within the ""HOT"" zone

LABORER - FREE AIR CLASSIFICATIONS

GROUP 1: Grout person - pumps, brake person, track person, form mover & stripper (wood & steel), shaft laborer, laborer topside, outside motorperson, miner, conveyor operator, miner welder, heading motorperson, erecting operator, mucking machine operator, nozzle person, rodperson, safety miner, shaft & tunnel, steel & rodperson, mole nipper, concrete worker, form erector (wood, steel and all accessories), cement finisher (this type of work only), top signal person, bottom person (when heading is 50' from

shaft), burner, shield operator and TBM operator

GROUP 2: Change house attendant, powder watchperson

GROUP 3: Hazardous waste work within the ""HOT"" zone

PAIN0011-005 06/01/2022

	Rates	Fringes
PAINTER		
Brush and Roller	$ 37.22	23.40
Epoxy, Tanks, Towers, Swing Stage & Structural Steel	$ 39.22	23.40
Spray, Sand & Water Blasting	$ 40.22	23.40
Taper	$ 37.97	23.40
Wall Coverer	$ 37.72	23.40

PAIN0011-006 06/01/2022

	Rates	Fringes
GLAZIER	$ 40.78	23.40

FOOTNOTES:

SWING STAGE: $1.00 per hour additional.

PAID HOLIDAYS: Labor Day & Christmas Day.

PAIN0011-011 06/01/2022

	Rates	Fringes
Painter (Bridge Work)	$ 55.00	23.75

PAIN0035-008 06/01/2011

	Rates	Fringes
Sign Painter	$ 24.79	13.72

PLAS0040-001 06/03/2019

BUILDING CONSTRUCTION

	Rates	Fringes
CEMENT MASON/CONCRETE FINISHER	$ 36.00	27.15

FOOTNOTE: Cement Mason: Work on free swinging scaffolds under 3 planks width and which is 20 or more feet above ground and any offset structure: $.30 per hour additional.

PLAS0040-002 07/01/2019

HEAVY AND HIGHWAY CONSTRUCTION

	Rates	Fringes

CEMENT MASON/CONCRETE FINISHER...$ 32.85 22.20

PLAS0040-003 07/01/2019

	Rates	Fringes
PLASTERER.....$	37.55	27.50

PLUM0051-002 08/29/2022

	Rates	Fringes
Plumbers and Pipefitters.....$	47.89	31.40

ROOF0033-004 12/01/2022

	Rates	Fringes
ROOFER.....$	42.23	29.67

SFRI0669-001 04/01/2022

	Rates	Fringes
SPRINKLER FITTER.....$	47.55	29.38

SHEE0017-002 12/01/2020

	Rates	Fringes
Sheet Metal Worker.....$	38.58	36.73

TEAM0251-001 05/01/2022

HEAVY AND HIGHWAY CONSTRUCTION

	Rates	Fringes
TRUCK DRIVER		
GROUP 1.....$	28.46	32.10+A+B+C
GROUP 2.....$	28.61	$ 32.10+A+B+C
GROUP 3.....$	28.66	$ 32.10+A+B+C
GROUP 4.....$	28.71	$ 32.10+A+B+C
GROUP 5.....$	28.81	$ 32.10+A+B+C
GROUP 6.....$	29.21	$ 32.10+A+B+C
GROUP 7.....$	29.41	$ 32.10+A+B+C
GROUP 8.....$	28.91	$ 32.10+A+B+C
GROUP 9.....$	29.16	$ 32.10+A+B+C
GROUP 10.....$	28.96	$ 32.10+A+B+C

FOOTNOTES:

A. Paid Holidays: New Year's Day, Memorial Day, Independence Day, Labor Day, Thanksgiving Day and Christmas Day, plus Presidents' Day, Columbus Day, Veteran's Day & V-J Day, providing the employee has worked at least one day in the calendar week in which the holiday falls.

B. Employee who has been on the payroll for 1 year or more but less than 5 years and has worked 150 Days during the last year of employment shall receive 1 week's paid vacation; 5 to 10 years - 2 weeks' paid vacation; 10 or more years - 3 week's paid vacation.

C. Employees on the seniority list shall be paid a one

hundred dollar ($100.00) bonus for every four hundred (400) hours worked, up to a maximum of five hundred dollars ($500.00)

All drivers working on a defined hazard material job site shall be paid a premium of $2.00 per hour over applicable rate.

TRUCK DRIVER CLASSIFICATIONS

GROUP 1: Pick-up trucks, station wagons, & panel trucks

GROUP 2: Two-axle on low beds

GROUP 3: Two-axle dump truck

GROUP 4: Three-axle dump truck

GROUP 5: Four- and five-axle equipment

GROUP 6: Low-bed or boom trailer.

GROUP 7: Trailers when used on a double hook up (pulling 2 trailers)

GROUP 8: Special earth-moving equipment, under 35 tons

GROUP 9: Special earth-moving equipment, 35 tons or over

GROUP 10: Tractor trailer

WELDERS - Receive rate prescribed for craft performing operation to which welding is incidental.

==========

Note: Executive Order (EO) 13706, Establishing Paid Sick Leave for Federal Contractors applies to all contracts subject to the Davis-Bacon Act for which the contract is awarded (and any solicitation was issued) on or after January 1, 2017. If this contract is covered by the EO, the contractor must provide employees with 1 hour of paid sick leave for every 30 hours they work, up to 56 hours of paid sick leave each year. Employees must be permitted to use paid sick leave for their own illness, injury or other health-related needs, including preventive care; to assist a family member (or person who is like family to the employee) who is ill, injured, or has other health-related needs, including preventive care; or for reasons resulting from, or to assist a family member (or person who is like family to the employee) who is a victim of, domestic violence, sexual assault, or stalking. Additional information on contractor requirements and worker protections under the EO is available at https://www.dol.gov/agencies/whd/government-contracts.

Unlisted classifications needed for work not included within the scope of the classifications listed may be added after award only as provided in the labor standards contract clauses (29CFR 5.5 (a) (1) (ii)).

The body of each wage determination lists the classification and wage rates that have been found to be prevailing for the cited type(s) of construction in the area covered by the wage determination. The classifications are listed in alphabetical order of ""identifiers"" that indicate whether the particular rate is a union rate (current union negotiated rate for local), a survey rate (weighted average rate) or a union average rate (weighted union average rate).

Union Rate Identifiers

A four letter classification abbreviation identifier enclosed in dotted lines beginning with characters other than ""SU"" or ""UAVG"" denotes that the union classification and rate were prevailing for that classification in the survey. Example: PLUM0198-005 07/01/2014. PLUM is an abbreviation identifier of the union which prevailed in the survey for this classification, which in this example would be Plumbers. 0198 indicates the local union number or district council number where applicable, i.e., Plumbers Local 0198. The next number, 005 in the example, is an internal number used in processing the wage determination. 07/01/2014 is the effective date of the most current negotiated rate, which in this example is July 1, 2014.

Union prevailing wage rates are updated to reflect all rate changes in the collective bargaining agreement (CBA) governing this classification and rate.

Survey Rate Identifiers

Classifications listed under the ""SU"" identifier indicate that no one rate prevailed for this classification in the survey and the published rate is derived by computing a weighted average rate based on all the rates reported in the survey for that classification. As this weighted average rate includes all rates reported in the survey, it may include both union and non-union rates. Example: SULA2012-007 5/13/2014. SU indicates the rates are survey rates based on a weighted average calculation of rates and are not majority rates. LA indicates the State of Louisiana. 2012 is the year of survey on which these classifications and rates are based. The next number, 007 in the example, is an internal number used in producing the wage determination. 5/13/2014 indicates the survey completion date for the classifications and rates under that identifier.

Survey wage rates are not updated and remain in effect until a new survey is conducted.

Union Average Rate Identifiers

Classification(s) listed under the UAVG identifier indicate that no single majority rate prevailed for those classifications; however, 100% of the data reported for the classifications was union data. EXAMPLE: UAVG-OH-0010 08/29/2014. UAVG indicates that the rate is a weighted union average rate. OH indicates the state. The next number, 0010 in the example, is an internal number used in producing the wage determination. 08/29/2014 indicates the survey completion date for the classifications and rates under that identifier.

A UAVG rate will be updated once a year, usually in January of each year, to reflect a weighted average of the current negotiated/CBA rate of the union locals from which the rate is

based.

WAGE DETERMINATION APPEALS PROCESS

1.) Has there been an initial decision in the matter? This can be:

* an existing published wage determination
* a survey underlying a wage determination
* a Wage and Hour Division letter setting forth a position on a wage determination matter
* a conformance (additional classification and rate) ruling

On survey related matters, initial contact, including requests for summaries of surveys, should be with the Wage and Hour National Office because National Office has responsibility for the Davis-Bacon survey program. If the response from this initial contact is not satisfactory, then the process described in 2.) and 3.) should be followed.

With regard to any other matter not yet ripe for the formal process described here, initial contact should be with the Branch of Construction Wage Determinations. Write to:

Branch of Construction Wage Determinations
Wage and Hour Division
U.S. Department of Labor
200 Constitution Avenue, N.W.
Washington, DC 20210

2.) If the answer to the question in 1.) is yes, then an interested party (those affected by the action) can request review and reconsideration from the Wage and Hour Administrator (See 29 CFR Part 1.8 and 29 CFR Part 7). Write to:

Wage and Hour Administrator
U.S. Department of Labor
200 Constitution Avenue, N.W.
Washington, DC 20210

The request should be accompanied by a full statement of the interested party's position and by any information (wage payment data, project description, area practice material, etc.) that the requestor considers relevant to the issue.

3.) If the decision of the Administrator is not favorable, an interested party may appeal directly to the Administrative Review Board (formerly the Wage Appeals Board). Write to:

Administrative Review Board
U.S. Department of Labor
200 Constitution Avenue, N.W.
Washington, DC 20210

4.) All decisions by the Administrative Review Board are final.

==========

END OF GENERAL DECISIO"

TABLE OF ARTICLES

1 THE WORK OF THIS CONTRACT

2 DATE OF COMMENCEMENT AND SUBSTANTIAL COMPLETION

3 CONTRACT SUM

4 PAYMENT

5 DISPUTE RESOLUTION

6 ENUMERATION OF CONTRACT DOCUMENTS

7 GENERAL PROVISIONS

8 OWNER

9 CONTRACTOR

10 ARCHITECT

11 SUBCONTRACTORS

12 CONSTRUCTION BY OWNER OR BY SEPARATE CONTRACTORS

13 CHANGES IN THE WORK

14 TIME

15 PAYMENTS AND COMPLETION

16 PROTECTION OF PERSONS AND PROPERTY

17 INSURANCE AND BONDS

18 CORRECTION OF WORK

19 MISCELLANEOUS PROVISIONS

20 TERMINATION OF THE CONTRACT

21 CLAIMS AND DISPUTES

EXHIBIT A DETERMINATION OF THE COST OF THE WORK

DRAFT

ARTICLE 1 THE WORK OF THIS CONTRACT

The Contractor shall execute the Work described in the Contract Documents, except as specifically indicated in the Contract Documents, as listed in Article 6 of this Agreement or reasonably inferable by the Contractor from the Contract Documents as necessary to produce the results intended by the Contract Documents,to be the responsibility of others.

ARTICLE 2 DATE OF COMMENCEMENT AND SUBSTANTIAL COMPLETION – See EXHIBIT A, Project Schedule

§ 2.1 The date of commencement of the Work shall be:
(Check one of the following boxes.)

[« »] The date of this Agreement.

AIA Document A104™ – 2017 (formerly A107™ – 2007). Copyright © 1936, 1951, 1958, 1961, 1963, 1966, 1970, 1974, 1978, 1987, 1997, 2007 and 2017 by The American Institute of Architects. All rights reserved. The "American Institute of Architects," "AIA," the AIA Logo, and "AIA Contract Documents" are registered trademarks and may not be used without permission. This draft was produced by AIA software at 11:30:12 ET on 02/01/2021 under Order No.2827020581 which expires on 04/09/2021, is not for resale, is licensed for one-time use only, and may only be used in accordance with the AIA Contract Documents® Terms of Service. To report copyright violations, e-mail copyright@aia.org.
User Notes: (812404280)

DRAFT

AIA® Document A104™ – 2017

Standard Abbreviated Form of Agreement Between Owner and Contractor

AGREEMENT made as of the « » day of « » in the year « »
(In words, indicate day, month and year.)

BETWEEN the Owner:
(Name, legal status, address and other information)

«**Providence Public Building Authority** »
« »

and the Contractor:
(Name, legal status, address and other information)

« »« »
« »
« »
« »

for the following Project:
(Name, location and detailed description)

« »
« »
« »

The Architect:
(Name, legal status, address and other information)

«
»
« »

The Owner and Contractor agree as follows.

ADDITIONS AND DELETIONS:
The author of this document has added information needed for its completion. The author may also have revised the text of the original AIA standard form. An *Additions and Deletions Report* that notes added information as well as revisions to the standard form text is available from the author and should be reviewed.

This document has important legal consequences. Consultation with an attorney is encouraged with respect to its completion or modification.

DRAFT

ELECTRONIC COPYING of any portion of this AIA® Document to another electronic file is prohibited and constitutes a violation of copyright laws as set forth in the footer of this document.

AIA Document A104™ – 2017 (formerly A107™ – 2007). Copyright © 1936, 1951, 1958, 1961, 1963, 1966, 1970, 1974, 1978, 1987, 1997, 2007 and 2017 by The American Institute of Architects. All rights reserved. The "American Institute of Architects," "AIA," the AIA Logo, and "AIA Contract Documents" are registered trademarks and may not be used without permission. This draft was produced by AIA software at 11:30:12 ET on 02/01/2021 under Order No.2827020581 which expires on 04/09/2021, is not for resale, is licensed for one-time use only, and may only be used in accordance with the AIA Contract Documents® Terms of Service. To report copyright violations, e-mail copyright@aia.org.
User Notes: (812404280)

[«X »] A date set forth in a notice to proceed issued by the Owner.

[« »] Established as follows:
(Insert a date or a means to determine the date of commencement of the Work.)

« »

If a date of commencement of the Work is not selected, then the date of commencement shall be the date of this Agreement.

§ 2.2 The Contract Time shall be measured from the date of commencement.

§ 2.3 Substantial Completion

§ 2.3.1 Subject to adjustments of the Contract Time as provided in the Contract Documents, the Contractor shall achieve Substantial Completion of the entire Work: The Contractor shall achieve Substantial Completion including, without limitation, the completion of any so-called punch list items reasonably soon thereafter, but in no event longer than fourteen (14) days following Substantial Completion. TIME IS OF THE ESSENCE.

(Check the appropriate box and complete the necessary information.)

[« »] Not later than « » (« ») weeks from the date of commencement of the Work. Project Schedule attached hereto as **EXHIBIT A**.

[«X »] By the following date: « »

§ 2.3.2 Subject to adjustments of the Contract Time as provided in the Contract Documents, if portions of the Work are to be completed prior to Substantial Completion of the entire Work, the Contractor shall achieve Substantial Completion of such portions by the following dates:

Portion of Work	Substantial Completion Date

§ 2.3.3 If the Contractor fails to achieve Substantial Completion as provided in this Section 2.3, liquidated damages, if any, shall be assessed as set forth in Section 3.5. **N/A**

ARTICLE 3 CONTRACT SUM

§ 3.1 The Owner shall pay the Contractor the Contract Sum in current funds for the Contractor's performance of the Contract. The Contract Sum shall be one of the following:
(Check the appropriate box.)

[« X »] Stipulated Sum, in accordance with Section 3.2 below

[« »] Cost of the Work plus the Contractor's Fee, in accordance with Section 3.3 below

[« »] Cost of the Work plus the Contractor's Fee with a Guaranteed Maximum Price, in accordance with Section 3.4 below

(Based on the selection above, complete Section 3.2, 3.3 or 3.4 below.)

§ 3.2 The Stipulated Sum shall be « » **($ «»),** subject to additions and deductions as provided in the Contract Documents.

§ 3.2.1 The Stipulated Sum is based upon the following alternates, if any, which are described in the Contract Documents and are hereby accepted by the Owner:

AIA Document A104™ – 2017 (formerly A107™ – 2007). Copyright © 1936, 1951, 1958, 1961, 1963, 1966, 1970, 1974, 1978, 1987, 1997, 2007 and 2017 by The American Institute of Architects. All rights reserved. The "American Institute of Architects," "AIA," the AIA Logo, and "AIA Contract Documents" are registered trademarks and may not be used without permission. This draft was produced by AIA software at 11:30:12 ET on 02/01/2021 under Order No.2827020581 which expires on 04/09/2021, is not for resale, is licensed for one-time use only, and may only be used in accordance with the AIA Contract Documents® Terms of Service. To report copyright violations, e-mail copyright@aia.org.
User Notes: (812404280)

(State the numbers or other identification of accepted alternates. If the bidding or proposal documents permit the Owner to accept other alternates subsequent to the execution of this Agreement, attach a schedule of such other alternates showing the amount for each and the date when that amount expires.)

«See Contractor's Proposal dated , EXHIBIT B »

§ 3.2.2 Unit prices, if any: **See Contractor's Proposal dated , EXHIBIT B**
(Identify the item and state the unit price and the quantity limitations, if any, to which the unit price will be applicable.)

Item	Units and Limitations	Price per Unit ($0.00)

Unit prices shall be complete and include without limitation:

(i) All materials, equipment, labor, delivery, installation, overhead and profit; and

(ii) Any other costs or expenses in connection with or incidental to the performance of the portion of the work to which such unit prices apply.

§ 3.2.3 Allowances, if any, included in the stipulated sum: **See Contractor's Proposal dated , EXHIBIT B**
(Identify each allowance.)

Item	Price

The allowance amounts are complete and include without limitation:

(i) All materials, equipment, labor, delivery, installation, overhead and profit; and

(ii) Any other costs or expenses in connection with or incidental to the performance of that portion of the work to which such allowance applies.

§ 3.3 Cost of the Work Plus Contractor's Fee N/A

§ 3.3.1 The Cost of the Work is as defined in Exhibit A, Determination of the Cost of the Work.

§ 3.3.2 The Contractor's Fee:
(State a lump sum, percentage of Cost of the Work or other provision for determining the Contractor's Fee and the method of adjustment to the Fee for changes in the Work.)

« »

§ 3.4 Cost of the Work Plus Contractor's Fee With a Guaranteed Maximum Price N/A

§ 3.4.1 The Cost of the Work is as defined in Exhibit A, Determination of the Cost of the Work.

§ 3.4.2 The Contractor's Fee:
(State a lump sum, percentage of Cost of the Work or other provision for determining the Contractor's Fee and the method of adjustment to the Fee for changes in the Work.)

« »

§ 3.4.3 Guaranteed Maximum Price N/A

§ 3.4.3.1 The sum of the Cost of the Work and the Contractor's Fee is guaranteed by the Contractor not to exceed « » ($ « »), subject to additions and deductions by changes in the Work as provided in the Contract Documents. This maximum sum is referred to in the Contract Documents as the Guaranteed Maximum Price. Costs which would cause the Guaranteed Maximum Price to be exceeded shall be paid by the Contractor without reimbursement by the Owner.
(Insert specific provisions if the Contractor is to participate in any savings.)

« »

AIA Document A104™ – 2017 (formerly A107™ – 2007). Copyright © 1936, 1951, 1958, 1961, 1963, 1966, 1970, 1974, 1978, 1987, 1997, 2007 and 2017 by The American Institute of Architects. All rights reserved. The "American Institute of Architects," "AIA," the AIA Logo, and "AIA Contract Documents" are registered trademarks and may not be used without permission. This draft was produced by AIA software at 11:30:12 ET on 02/01/2021 under Order No.2827020581 which expires on 04/09/2021, is not for resale, is licensed for one-time use only, and may only be used in accordance with the AIA Contract Documents® Terms of Service. To report copyright violations, e-mail copyright@aia.org.
User Notes: (812404280)

§ 3.4.3.2 The Guaranteed Maximum Price is based on the following alternates, if any, which are described in the Contract Documents and are hereby accepted by the Owner: **N/A**
(State the numbers or other identification of accepted alternates. If the bidding or proposal documents permit the Owner to accept other alternates subsequent to the execution of this Agreement, attach a schedule of such other alternates showing the amount for each and the date when that amount expires.)

« **N/A** »

§ 3.4.3.3 Unit Prices, if any:
(Identify the item and state the unit price and the quantity limitations, if any, to which the unit price will be applicable.)

Item	Units and Limitations	Price per Unit ($0.00)

§ 3.4.3.4 Allowances: **See Contractor's Proposal dated attached as EXHIBIT B.**
(Identify each allowance.)

Item	Price

§ 3.4.3.5 Assumptions, if any, on which the Guaranteed Maximum Price is based:

«**N/A** »

§ 3.4.3.6 To the extent that the Contract Documents are anticipated to require further development, the Guaranteed Maximum Price includes the costs attributable to such further development consistent with the Contract Documents and reasonably inferable therefrom. Such further development does not include changes in scope, systems, kinds and quality of materials, finishes or equipment, all of which, if required, shall be incorporated by Change Order.

§ 3.4.3.7 The Owner shall authorize preparation of revisions to the Contract Documents that incorporate the agreed-upon assumptions contained in Section 3.4.3.5. The Owner shall promptly furnish such revised Contract Documents to the Contractor. The Contractor shall notify the Owner and Architect of any inconsistencies between the agreed-upon assumptions contained in Section 3.4.3.5 and the revised Contract Documents.

§ 3.5 Liquidated damages, if any: **N/A**
(Insert terms and conditions for liquidated damages, if any.)

« »

ARTICLE 4 PAYMENT

§ 4.1 Progress Payments

§ 4.1.1 Based upon Applications for Payment submitted to the Architect by the Contractor and Certificates for Payment issued by the Architect, the Owner shall make progress payments on account of the Contract Sum to the Contractor as provided below and elsewhere in the Contract Documents.

§ 4.1.2 The period covered by each Application for Payment shall be one calendar month ending on the last day of the month, or as follows:

« »

§ 4.1.3 Provided that an Application for Payment is received by the Architect not later than the «**30th** » day of a month, the Owner shall make payment of the certified amount to the Contractor not later than the «**30th** » day of the « **following** » month. If an Application for Payment is received by the Architect after the date fixed above, payment

AIA Document A104™ – 2017 (formerly A107™ – 2007). Copyright © 1936, 1951, 1958, 1961, 1963, 1966, 1970, 1974, 1978, 1987, 1997, 2007 and 2017 by The American Institute of Architects. All rights reserved. The "American Institute of Architects," "AIA," the AIA Logo, and "AIA Contract Documents" are registered trademarks and may not be used without permission. This draft was produced by AIA software at 11:30:12 ET on 02/01/2021 under Order No.2827020581 which expires on 04/09/2021, is not for resale, is licensed for one-time use only, and may only be used in accordance with the AIA Contract Documents® Terms of Service. To report copyright violations, e-mail copyright@aia.org.
User Notes: (812404280)

shall be made by the Owner not later than «**Thirty** » («**30** ») days after the Architect receives the Application for Payment.
(Federal, state or local laws may require payment within a certain period of time.)

§ 4.1.4 For each progress payment made prior to Substantial Completion of the Work, the Owner may withhold retainage from the payment otherwise due as follows:
(Insert a percentage or amount to be withheld as retainage from each Application for Payment and any terms for reduction of retainage during the course of the Work. The amount of retainage may be limited by governing law.)

« **Five Percent (5%)** »
In addition to the aforesaid retainage, all payments shall be reduced by Three (3%) Percent pursuant to RIGL 44-1-6 (non-resident contractors tax withholding), if applicable.

§ 4.1.5 Payments due and unpaid under the Contract shall bear interest from the date payment is due at the rate stated below, or in the absence thereof, at the legal rate prevailing from time to time at the place where the Project is located.
(Insert rate of interest agreed upon, if any.)

« **1** » % «**(one percent)**

§ 4.1.6 In addition to other required items, each Application for Payment shall be accompanied by:
(i) With each Application for Payment, a completed Partial Release of Lien as noted in **EXHIBIT D**.

§ 4.1.7 Applications for Payment shall be pursuant to AIA Document G702 and G703, attached hereto as **EXHIBIT C**.

§ 4.2 Final Payment
§ 4.2.1 Final payment, constituting the entire unpaid balance of the Contract Sum, shall be made by the Owner to the Contractor when

.1 the Contractor has fully performed the Contract except for the Contractor's responsibility to correct Work as provided in Section 18.2, and to satisfy other requirements, if any, which extend beyond final payment;

.2

.3 a final Certificate for Payment has been issued by the Architect in accordance with Section 15.7.1.

.4 a copy of duly executed Final Releases by the Contractor and its subcontractors, see **EXHIBIT D**;

.5 copies of all documentation to the Owner including, but not limited to, warranties, manufacturer's instructions and any other documentation in relation to all systems including, but not limited to, HVAC, plumbing, windows, and all other required documents pursuant to the Contract between the parties.

§ 4.2.2 The Owner's final payment to the Contractor shall be made no later than 30 days after the issuance of the Architect's final Certificate for Payment, or as follows:

« »

ARTICLE 5 DISPUTE RESOLUTION
§ 5.1 Binding Dispute Resolution
For any claim subject to, but not resolved by, mediation pursuant to Section 21.5, the method of binding dispute resolution shall be as follows:
(Check the appropriate box.)

[«**X** »] Arbitration pursuant to Section 21.6 of this Agreement

[« »] Litigation in a court of competent jurisdiction

[« »] Other *(Specify)*

AIA Document A104™ – 2017 (formerly A107™ – 2007). Copyright © 1936, 1951, 1958, 1961, 1963, 1966, 1970, 1974, 1978, 1987, 1997, 2007 and 2017 by The American Institute of Architects. All rights reserved. The "American Institute of Architects," "AIA," the AIA Logo, and "AIA Contract Documents" are registered trademarks and may not be used without permission. This draft was produced by AIA software at 11:30:12 ET on 02/01/2021 under Order No.2827020581 which expires on 04/09/2021, is not for resale, is licensed for one-time use only, and may only be used in accordance with the AIA Contract Documents® Terms of Service. To report copyright violations, e-mail copyright@aia.org.
User Notes: (812404280)

« »

If the Owner and Contractor do not select a method of binding dispute resolution, or do not subsequently agree in writing to a binding dispute resolution method other than litigation, claims will be resolved in a court of competent jurisdiction.

ARTICLE 6 ENUMERATION OF CONTRACT DOCUMENTS – See EXHIBIT LIST dated the day of in the year 2022 with Exhibits A through _, which is incorporated herein.

§ 6.1 The Contract Documents are defined in Article 7 and, except for Modifications issued after execution of this Agreement, are enumerated in the sections below.

§ 6.1.1 The Agreement is this executed AIA Document A104™–2017, Standard Abbreviated Form of Agreement Between Owner and Contractor.

§ 6.1.2 AIA Document E203™–2013, Building Information Modeling and Digital Data Exhibit, dated as indicated below:
(Insert the date of the E203–2013 incorporated into this Agreement.)

« N/A »

§ 6.1.3 The Supplementary and other Conditions of the Contract: **N/A**

Document	Title	Date	Pages

§ 6.1.4 The Specifications:
(Either list the Specifications here or refer to an exhibit attached to this Agreement.)

« See Contractor's Proposal and Specifications dated (See EXHIBIT B) »

Section	Title	Date	Pages

§ 6.1.5 The Drawings:
(Either list the Drawings here or refer to an exhibit attached to this Agreement.)

«See Architectural Drawings dated , copies of which are attached hereto as EXHIBIT E_ »

Number	Title	Date

§ 6.1.6 The Addenda, if any: **EXHIBIT F - None**

Number	Date	Pages
None		

Portions of Addenda relating to bidding or proposal requirements are not part of the Contract Documents unless the bidding or proposal requirements are enumerated in this Article 6.

§ 6.1.7 Additional documents, if any, forming part of the Contract Documents: **N/A**

.1 Other Exhibits:
(Check all boxes that apply.)

[« »] Exhibit A, Determination of the Cost of the Work.

AIA Document A104™ – 2017 (formerly A107™ – 2007). Copyright © 1936, 1951, 1958, 1961, 1963, 1966, 1970, 1974, 1978, 1987, 1997, 2007 and 2017 by The American Institute of Architects. All rights reserved. The "American Institute of Architects," "AIA," the AIA Logo, and "AIA Contract Documents" are registered trademarks and may not be used without permission. This draft was produced by AIA software at 11:30:12 ET on 02/01/2021 under Order No.2827020581 which expires on 04/09/2021, is not for resale, is licensed for one-time use only, and may only be used in accordance with the AIA Contract Documents® Terms of Service. To report copyright violations, e-mail copyright@aia.org.
User Notes: (812404280)

[« »] AIA Document E204™–2017, Sustainable Projects Exhibit, dated as indicated below:
(Insert the date of the E204-2017 incorporated into this Agreement.)

« »

[« »] The Sustainability Plan:

Title	Date	Pages

[« »] Supplementary and other Conditions of the Contract:

Document	Title	Date	Pages

.2 Other documents, if any, listed below:
(List here any additional documents that are intended to form part of the Contract Documents.)

« »

ARTICLE 7 GENERAL PROVISIONS

§ 7.1 The Contract Documents

The Contract Documents are enumerated in Article 6 and consist of this Agreement (including, if applicable, Supplementary and other Conditions of the Contract), Drawings, Specifications, Addenda issued prior to the execution of this Agreement, other documents listed in this Agreement, and Modifications issued after execution of this Agreement. A Modification is (1) a written amendment to the Contract signed by both parties, (2) a Change Order, (3) a Construction Change Directive, or (4) a written order for a minor change in the Work issued by the Architect. The intent of the Contract Documents is to include all items necessary for the proper execution and completion of the Work by the Contractor. The Contract Documents are complementary, and what is required by one shall be as binding as if required by all; performance by the Contractor shall be required to the extent consistent with the Contract Documents and reasonably inferable from them as being necessary to produce the indicated results.

§ 7.2 The Contract

The Contract Documents form the Contract for Construction. The Contract represents the entire and integrated agreement between the parties hereto and supersedes prior negotiations, representations, or agreements, either written or oral. The Contract may be amended or modified only by a Modification. The Contract Documents shall not be construed to create a contractual relationship of any kind between any persons or entities other than the Owner and the Contractor.

§ 7.3 The Work

The term "Work" means the construction and services required by the Contract Documents, whether completed or partially completed, and includes all other labor, materials, equipment, and services provided or to be provided by the Contractor to fulfill the Contractor's obligations. The Work may constitute the whole or a part of the Project.

§ 7.4 Instruments of Service

Instruments of Service are representations, in any medium of expression now known or later developed, of the tangible and intangible creative work performed by the Architect and the Architect's consultants under their respective professional services agreements. Instruments of Service may include, without limitation, studies, surveys, models, sketches, drawings, specifications, and other similar materials.

§ 7.5 Ownership and use of Drawings, Specifications and Other Instruments of Service

§ 7.5.1 The Architect and the Architect's consultants shall be deemed the authors and owners of their respective Instruments of Service, including the Drawings and Specifications, and will retain all common law, statutory and other reserved rights in their Instruments of Service, including copyrights. The Contractor, Subcontractors, Sub-subcontractors, and suppliers shall not own or claim a copyright in the Instruments of Service. Submittal or

AIA Document A104™ – 2017 (formerly A107™ – 2007). Copyright © 1936, 1951, 1958, 1961, 1963, 1966, 1970, 1974, 1978, 1987, 1997, 2007 and 2017 by The American Institute of Architects. All rights reserved. The "American Institute of Architects," "AIA," the AIA Logo, and "AIA Contract Documents" are registered trademarks and may not be used without permission. This draft was produced by AIA software at 11:30:12 ET on 02/01/2021 under Order No.2827020581 which expires on 04/09/2021, is not for resale, is licensed for one-time use only, and may only be used in accordance with the AIA Contract Documents® Terms of Service. To report copyright violations, e-mail copyright@aia.org.
User Notes: (812404280)

distribution to meet official regulatory requirements or for other purposes in connection with the Project is not to be construed as publication in derogation of the Architect's or Architect's consultants' reserved rights.

§ 7.5.2 The Contractor, Subcontractors, Sub-subcontractors and suppliers are authorized to use and reproduce the Instruments of Service provided to them, subject to the protocols established pursuant to Sections 7.6 and 7.7, solely and exclusively for execution of the Work. All copies made under this authorization shall bear the copyright notice, if any, shown on the Instruments of Service. The Contractor, Subcontractors, Sub-subcontractors, and suppliers may not use the Instruments of Service on other projects or for additions to this Project outside the scope of the Work without the specific written consent of the Owner, Architect and the Architect's consultants.

§ 7.6

§ 7.7

§ 7.8 Severability

The invalidity of any provision of the Contract Documents shall not invalidate the Contract or its remaining provisions. If it is determined that any provision of the Contract Documents violates any law, or is otherwise invalid or unenforceable, then that provision shall be revised to the extent necessary to make that provision legal and enforceable. In such case the Contract Documents shall be construed, to the fullest extent permitted by law, to give effect to the parties' intentions and purposes in executing the Contract.

§ 7.9 Notice

§ 7.9.1 Except as otherwise provided in Section 7.9.2, where the Contract Documents require one party to notify or give notice to the other party, such notice shall be provided in writing to the designated representative of the party to whom the notice is addressed and shall be deemed to have been duly served if delivered in person, by mail, by courier.

(If other than in accordance with AIA Document E203–2013, insert requirements for delivering Notice in electronic format such as name, title and email address of the recipient and whether and how the system will be required to generate a read receipt for the transmission.)

« »

§ 7.9.2 Notice of Claims shall be provided in writing and shall be deemed to have been duly served only if delivered to the designated representative of the party to whom the notice is addressed by certified or registered mail, or by courier providing proof of delivery.

§ 7.10 Relationship of the Parties

Where the Contract is based on the Cost of the Work plus the Contractor's Fee, with or without a Guaranteed Maximum Price, the Contractor accepts the relationship of trust and confidence established by this Agreement and covenants with the Owner to cooperate with the Architect and exercise the Contractor's skill and judgment in furthering the interests of the Owner; to furnish efficient business administration and supervision; to furnish at all times an adequate supply of workers and materials; and to perform the Work in an expeditious and economical manner consistent with the Owner's interests. The Owner agrees to furnish and approve, in a timely manner, information required by the Contractor and to make payments to the Contractor in accordance with the requirements of the Contract Documents.

ARTICLE 8 OWNER

§ 8.1 Information and Services Required of the Owner

§ 8.1.1

§ 8.1.2 The Owner shall furnish all necessary surveys and a legal description of the site.

§ 8.1.3 The Contractor shall be entitled to rely on the accuracy of information furnished by the Owner but shall exercise proper precautions relating to the safe performance of the Work.

§ 8.1.4 Except for permits and fees that are the responsibility of the Contractor under the Contract Documents, including those required under Section 9.6.1, the Owner shall secure and pay for other necessary approvals,

AIA Document A104™ – 2017 (formerly A107™ – 2007). Copyright © 1936, 1951, 1958, 1961, 1963, 1966, 1970, 1974, 1978, 1987, 1997, 2007 and 2017 by The American Institute of Architects. All rights reserved. The "American Institute of Architects," "AIA," the AIA Logo, and "AIA Contract Documents" are registered trademarks and may not be used without permission. This draft was produced by AIA software at 11:30:12 ET on 02/01/2021 under Order No.2827020581 which expires on 04/09/2021, is not for resale, is licensed for one-time use only, and may only be used in accordance with the AIA Contract Documents® Terms of Service. To report copyright violations, e-mail copyright@aia.org.
User Notes: (812404280)

easements, assessments, and charges required for the construction, use, or occupancy of permanent structures or for permanent changes in existing facilities.

§ 8.2 Owner's Right to Stop the Work

If the Contractor fails to correct Work which is not in accordance with the requirements of the Contract Documents, or repeatedly fails to carry out the Work in accordance with the Contract Documents, the Owner may issue a written order to the Contractor to stop the Work, or any portion thereof, until the cause for such order is eliminated; however, the right of the Owner to stop the Work shall not give rise to a duty on the part of the Owner to exercise this right for the benefit of the Contractor or any other person or entity.

§ 8.3 Owner's Right to Carry Out the Work

If the Contractor defaults or neglects to carry out the Work in accordance with the Contract Documents, and fails within a ten-day period after receipt of notice from the Owner to commence and continue correction of such default or neglect with diligence and promptness, the Owner may, without prejudice to any other remedies the Owner may have, correct such default or neglect. Such action by the Owner and amounts charged to the Contractor are both subject to prior approval of the Architect and the Architect may, pursuant to Section 15.4.3, withhold or nullify a Certificate for Payment in whole or in part, to the extent reasonably necessary to reimburse the Owner for the reasonable cost of correcting such deficiencies, including the Owner's expenses and compensation for the Architect's additional services made necessary by such default, neglect, or failure. If the Contractor disagrees with the actions of the Owner or the Architect, or the amounts claimed as costs to the Owner, the Contractor may file a Claim pursuant to Article 21.

§ 8.4 In no event shall the Owner have control over, charge of, or any responsibility for construction means, methods, techniques, sequences, or procedures or for safety precautions and programs in connection with the work.

ARTICLE 9 CONTRACTOR

§ 9.1 Review of Contract Documents and Field Conditions by Contractor

§ 9.1.1 Execution of the Contract by the Contractor is a representation that the Contractor has visited the site, become generally familiar with local conditions under which the Work is to be performed and correlated personal observations with requirements of the Contract Documents.

§ 9.1.2 Because the Contract Documents are complementary, the Contractor shall, before starting each portion of the Work, carefully study and compare the various Contract Documents relative to that portion of the Work, as well as the information furnished by the Owner pursuant to Section 8.1.2, shall take field measurements of any existing conditions related to that portion of the Work and shall observe any conditions at the site affecting it. These obligations are for the purpose of facilitating coordination and construction by the Contractor and are not for the purpose of discovering errors, omissions, or inconsistencies in the Contract Documents; however, the Contractor shall promptly report to the Architect any errors, inconsistencies, or omissions discovered by or made known to the Contractor as a request for information in such form as the Architect may require. It is recognized that the Contractor's review is made in the Contractor's capacity as a contractor and not as a licensed design professional unless otherwise specifically provided in the Contract Documents.

§ 9.1.3 The Contractor is not required to ascertain that the Architectural Drawings pursuant to **EXHIBIT E** are in accordance with applicable laws, statutes, ordinances, codes, rules and regulations, or lawful orders of public authorities, but the Contractor shall promptly report to the Architect any nonconformity discovered by or made known to the Contractor as a request for information in such form as the Architect may require.

§ 9.1.4 The Contractor shall comply with all applicable federal, state and local laws, statutes, rules, codes, ordinances and regulations.

§ 9.2 Supervision and Construction Procedures

§ 9.2.1 The Contractor shall supervise and direct the Work, using the Contractor's best skill and attention. The Contractor shall be solely responsible for and have control over construction means, methods, techniques, sequences, and procedures, and for coordinating all portions of the Work under the Contract, unless the Contract Documents give other specific instructions concerning these matters.

AIA Document A104™ – 2017 (formerly A107™ – 2007). Copyright © 1936, 1951, 1958, 1961, 1963, 1966, 1970, 1974, 1978, 1987, 1997, 2007 and 2017 by The American Institute of Architects. All rights reserved. The "American Institute of Architects," "AIA," the AIA Logo, and "AIA Contract Documents" are registered trademarks and may not be used without permission. This draft was produced by AIA software at 11:30:12 ET on 02/01/2021 under Order No.2827020581 which expires on 04/09/2021, is not for resale, is licensed for one-time use only, and may only be used in accordance with the AIA Contract Documents® Terms of Service. To report copyright violations, e-mail copyright@aia.org.
User Notes: (812404280)

§ 9.2.2 The Contractor shall be responsible to the Owner for acts and omissions of the Contractor's employees, Subcontractors and their agents and employees, and other persons or entities performing portions of the Work for or on behalf of the Contractor or any of its Subcontractors.

§ 9.3 Labor and Materials

§ 9.3.1 Unless otherwise provided in the Contract Documents, the Contractor shall provide and pay for labor, materials, equipment, tools, construction equipment and machinery, water, heat, utilities, transportation, and other facilities and services necessary for proper execution and completion of the Work whether temporary or permanent and whether or not incorporated or to be incorporated in the Work.

§ 9.3.2 The Contractor shall enforce strict discipline and good order among the Contractor's employees and other persons carrying out the Work. The Contractor shall not permit employment of unfit persons or persons not skilled in tasks assigned to them.

§ 9.3.3 The Contractor may make a substitution only with the consent of the Owner, after evaluation by the Architect and in accordance with a Modification.

§ 9.4 Warranty

The Contractor warrants to the Owner and Architect that materials and equipment furnished under the Contract will be of good quality and new unless the Contract Documents require or permit otherwise. The Contractor further warrants that the Work will conform to the requirements of the Contract Documents and will be free from defects, except for those inherent in the quality of the Work the Contract Documents require or permit. Work, materials, or equipment not conforming to these requirements may be considered defective. The Contractor's warranty excludes remedy for damage or defect caused by abuse, alterations to the Work not executed by the Contractor, improper or insufficient maintenance, improper operation or normal wear and tear under normal usage. All other warranties required by the Contract Documents shall be issued in the name of the Owner, or shall be transferable to the Owner, and shall commence in accordance with Section 15.6.3.

§ 9.5 Taxes

The Contractor shall pay sales, consumer, use, and other similar taxes that are legally enacted when bids are received or negotiations concluded, whether or not yet effective or merely scheduled to go into effect.

§ 9.6 Permits, Fees, Notices, and Compliance with Laws

§ 9.6.1 Unless otherwise provided in the Contract Documents, the Contractor shall secure and pay for the building permit as well as other permits, fees, licenses, and inspections by government agencies necessary for proper execution and completion of the Work that are customarily secured after execution of the Contract and legally required at the time bids are received or negotiations concluded.

§ 9.6.2 The Contractor shall comply with and give notices required by applicable laws, statutes, ordinances, codes, rules and regulations, and lawful orders of public authorities applicable to performance of the Work. If the Contractor performs Work knowing it to be contrary to applicable laws, statutes, ordinances, codes, rules and regulations, or lawful orders of public authorities, the Contractor shall assume appropriate responsibility for such Work and shall bear the costs attributable to correction.

§ 9.7 Allowances

The Contractor shall include in the Contract Sum all allowances stated in the Contract Documents. The Owner shall select materials and equipment under allowances with reasonable promptness. Allowance amounts shall include the costs to the Contractor of materials and equipment delivered at the site and all required taxes, less applicable trade discounts. Contractor's costs for unloading and handling at the site, labor, installation, overhead, profit, and other expenses contemplated for stated allowance amounts shall be included in the Contract Sum but not in the allowance.

§ 9.8 Contractor's Construction Schedules See EXHIBIT A_

§ 9.8.1 The Contractor, upon execution of this Agreement, shall submit for the Owner's and Architect's information a Contractor's construction schedule for the Work. The schedule shall not exceed time limits current under the Contract Documents, shall be revised at appropriate intervals as required by the conditions of the Work and Project, shall be related to the entire Project to the extent required by the Contract Documents, and shall provide for expeditious and practicable execution of the Work.

AIA Document A104™ – 2017 (formerly A107™ – 2007). Copyright © 1936, 1951, 1958, 1961, 1963, 1966, 1970, 1974, 1978, 1987, 1997, 2007 and 2017 by The American Institute of Architects. All rights reserved. The "American Institute of Architects," "AIA," the AIA Logo, and "AIA Contract Documents" are registered trademarks and may not be used without permission. This draft was produced by AIA software at 11:30:12 ET on 02/01/2021 under Order No.2827020581 which expires on 04/09/2021, is not for resale, is licensed for one-time use only, and may only be used in accordance with the AIA Contract Documents® Terms of Service. To report copyright violations, e-mail copyright@aia.org.
User Notes: (812404280)

§ 9.8.2 The Contractor shall perform the Work in general accordance with the most recent schedule submitted to the Owner and Architect.

§ 9.9 Submittals

§ 9.9.1 The Contractor shall review for compliance with the Contract Documents and submit to the Architect Shop Drawings, Product Data, Samples, and similar submittals required by the Contract Documents in coordination with the Contractor's construction schedule and in such sequence as to allow the Architect reasonable time for review. By submitting Shop Drawings, Product Data, Samples, and similar submittals, the Contractor represents to the Owner and Architect that the Contractor has (1) reviewed and approved them; (2) determined and verified materials, field measurements, and field construction criteria related thereto, or will do so; and (3) checked and coordinated the information contained within such submittals with the requirements of the Work and of the Contract Documents. The Work shall be in accordance with approved submittals.

§ 9.9.2 Shop Drawings, Product Data, Samples and similar submittals are not Contract Documents.

§ 9.9.3 The Contractor shall not be required to provide professional services that constitute the practice of architecture or engineering unless such services are specifically required by the Contract Documents or unless the Contractor needs to provide such services in order to carry out the Contractor's own responsibilities. If professional design services or certifications by a design professional are specifically required, the Owner and the Architect will specify the performance and design criteria that such services must satisfy. The Contractor shall cause such services or certifications to be provided by an appropriately licensed design professional. If no criteria are specified, the design shall comply with applicable codes and ordinances. Each Party shall be entitled to rely upon the information provided by the other Party. The Architect will review and approve or take other appropriate action on submittals for the limited purpose of checking for conformance with information provided and the design concept expressed in the Contract Documents. The Architect's review of Shop Drawings, Product Data, Samples, and similar submittals shall be for the limited purpose of checking for conformance with information given and the design concept expressed in the Contract Documents. In performing such review, the Architect will approve, or take other appropriate action upon, the Contractor's Shop Drawings, Product Data, Samples, and similar submittals.

§ 9.10 Use of Site

The Contractor shall confine operations at the site to areas permitted by applicable laws, statutes, ordinances, codes, rules and regulations, lawful orders of public authorities, and the Contract Documents and shall not unreasonably encumber the site with materials or equipment. CONTRACTOR IS AWARE THAT ADJACENT TO THE PREMISES UNDER THE SCOPE OF WORK PURSUANT TO THIS CONTRACT, CONTRACTOR SHALL PROVIDE ANY AND ALL SAFETY TECHNIQUES AND PRECAUTIONS TO PROTECT THE ADJACENT AREA AND THE PUBLIC AND EMPLOYEES OF THE OWNER.

§ 9.11 Cutting and Patching

The Contractor shall be responsible for cutting, fitting, or patching required to complete the Work or to make its parts fit together properly.

§ 9.12 Cleaning Up

The Contractor shall keep the premises and surrounding area free from accumulation of waste materials and rubbish caused by operations under the Contract. At completion of the Work, the Contractor shall remove waste materials, rubbish, the Contractor's tools, construction equipment, machinery, and surplus material from and about the Project.

§ 9.13 Access to Work

The Contractor shall provide the Owner and Architect with access to the Work in preparation and progress wherever located.

§ 9.14 Royalties, Patents and Copyrights

The Contractor shall pay all royalties and license fees. The Contractor shall defend suits or claims for infringement of copyrights and patent rights and shall hold the Owner and Architect harmless from loss on account thereof, but shall not be responsible for defense or loss when a particular design, process, or product of a particular manufacturer or manufacturers is required by the Contract Documents or where the copyright violations are contained in Drawings, Specifications or other documents prepared by the Owner or Architect. However, if an infringement of a

AIA Document A104™ – 2017 (formerly A107™ – 2007). Copyright © 1936, 1951, 1958, 1961, 1963, 1966, 1970, 1974, 1978, 1987, 1997, 2007 and 2017 by The American Institute of Architects. All rights reserved. The "American Institute of Architects," "AIA," the AIA Logo, and "AIA Contract Documents" are registered trademarks and may not be used without permission. This draft was produced by AIA software at 11:30:12 ET on 02/01/2021 under Order No.2827020581 which expires on 04/09/2021, is not for resale, is licensed for one-time use only, and may only be used in accordance with the AIA Contract Documents© Terms of Service. To report copyright violations, e-mail copyright@aia.org.
User Notes: (812404280)

copyright or patent is discovered by, or made known to, the Contractor, the Contractor shall be responsible for the loss unless the information is promptly furnished to the Architect.

§ 9.15 Indemnification

§ 9.15.1 To the fullest extent permitted by law, the Contractor shall indemnify and hold harmless the Owner, Architect, Architect's consultants, and agents and employees of any of them from and against claims, damages, losses and expenses, including but not limited to attorneys' fees, arising out of or resulting from performance of the Work, provided that such claim, damage, loss, or expense is attributable to bodily injury, sickness, disease or death, or to injury to or destruction of tangible property (other than the Work itself), but only to the extent caused by the negligent acts or omissions of the Contractor, a Subcontractor, anyone directly or indirectly employed by them, or anyone for whose acts they may be liable, regardless of whether or not such claim, damage, loss, or expense is caused in part by a party indemnified hereunder. Such obligation shall not be construed to negate, abridge, or reduce other rights or obligations of indemnity which would otherwise exist as to a party or person described in this Section 9.15.1.

§ 9.15.2 In claims against any person or entity indemnified under this Section 9.15 by an employee of the Contractor, a Subcontractor, anyone directly or indirectly employed by them, or anyone for whose acts they may be liable, the indemnification obligation under Section 9.15.1 shall not be limited by a limitation on amount or type of damages, compensation or benefits payable by or for the Contractor or Subcontractor under workers' compensation acts, disability benefit acts or other employee benefit acts.

ARTICLE 10 ARCHITECT

§ 10.1 The Architect will provide administration of the Contract as described in the Contract Documents and will be an Owner's representative during construction, until the date the Architect issues the final Certificate for Payment. The Architect will have authority to act on behalf of the Owner only to the extent provided in the Contract Documents, unless otherwise modified in writing in accordance with other provisions of the Contract.

§ 10.2 Duties, responsibilities, and limitations of authority of the Architect as set forth in the Contract Documents shall not be restricted, modified, or extended without written consent of the Owner, Contractor, and Architect. Consent shall not be unreasonably withheld.

§ 10.3 The Architect will visit the site at intervals appropriate to the stage of the construction to become generally familiar with the progress and quality of the portion of the Work completed, and to determine in general, if the Work observed is being performed in a manner indicating that the Work, when fully completed, will be in accordance with the Contract Documents. However, the Architect will not be required to make exhaustive or continuous on-site inspections to check the quality or quantity of the Work. The Architect will not have control over, charge of, or responsibility for the construction means, methods, techniques, sequences, or procedures, or for safety precautions and programs in connection with the Work, since these are solely the Contractor's rights and responsibilities under the Contract Documents.

§ 10.4 On the basis of the site visits, the Architect will keep the Owner reasonably informed about the progress and quality of the portion of the Work completed, and promptly report to the Owner (1) known deviations from the Contract Documents, (2) known deviations from the most recent construction schedule submitted by the Contractor, and (3) defects and deficiencies observed in the Work. The Architect will not be responsible for the Contractor's failure to perform the Work in accordance with the requirements of the Contract Documents. The Architect will not have control over or charge of and will not be responsible for acts or omissions of the Contractor, Subcontractors, or their agents or employees, or any other persons or entities performing portions of the Work.

§ 10.5 Based on the Architect's evaluations of the Work and of the Contractor's Applications for Payment, the Architect will review and certify the amounts due the Contractor and will issue Certificates for Payment in such amounts.

§ 10.6 The Architect has authority to reject Work that does not conform to the Contract Documents and to require inspection or testing of the Work.

AIA Document A104™ – 2017 (formerly A107™ – 2007). Copyright © 1936, 1951, 1958, 1961, 1963, 1966, 1970, 1974, 1978, 1987, 1997, 2007 and 2017 by The American Institute of Architects. All rights reserved. The "American Institute of Architects," "AIA," the AIA Logo, and "AIA Contract Documents" are registered trademarks and may not be used without permission. This draft was produced by AIA software at 11:30:12 ET on 02/01/2021 under Order No.2827020581 which expires on 04/09/2021, is not for resale, is licensed for one-time use only, and may only be used in accordance with the AIA Contract Documents® Terms of Service. To report copyright violations, e-mail copyright@aia.org.
User Notes: (812404280)

§ 10.7 The Architect will review and approve or take other appropriate action upon, the Contractor's submittals such as Shop Drawings, Product Data, and Samples, but only for the limited purpose of checking for conformance with information given and the design concept expressed in the Contract Documents.

§ 10.8 The Architect will interpret and decide matters concerning performance under, and requirements of, the Contract Documents on written request of either the Owner or Contractor. The Architect will make initial decisions on all claims, disputes, and other matters in question between the Owner and Contractor but will not be liable for results of any interpretations or decisions rendered in good faith.

§ 10.9 The Architect's decisions on matters relating to aesthetic effect will be final if consistent with the intent expressed in the Contract Documents.

ARTICLE 11 SUBCONTRACTORS

§ 11.1 A Subcontractor is a person or entity who has a direct contract with the Contractor to perform a portion of the Work at the site.

§ 11.2 Unless otherwise stated in the Contract Documents, the Contractor, as soon as practicable after award of the Contract, shall notify the Owner and Architect of the Subcontractors or suppliers proposed for each of the principal portions of the Work. The Contractor shall not contract with any Subcontractor or supplier to whom the Owner or Architect has made reasonable written objection within ten days after receipt of the Contractor's list of Subcontractors and suppliers. If the proposed but rejected Subcontractor was reasonably capable of performing the Work, the Contract Sum and Contract Time shall be increased or decreased by the difference, if any, occasioned by such change, and an appropriate Change Order shall be issued before commencement of the substitute Subcontractor's Work. The Contractor shall not be required to contract with anyone to whom the Contractor has made reasonable objection.

§ 11.3 Contracts between the Contractor and Subcontractors shall (1) require each Subcontractor, to the extent of the Work to be performed by the Subcontractor, to be bound to the Contractor by the terms of the Contract Documents, and to assume toward the Contractor all the obligations and responsibilities, including the responsibility for safety of the Subcontractor's Work, which the Contractor, by the Contract Documents, assumes toward the Owner and Architect, and (2) allow the Subcontractor the benefit of all rights, remedies and redress against the Contractor that the Contractor, by these Contract Documents, has against the Owner.

ARTICLE 12 CONSTRUCTION BY OWNER OR BY SEPARATE CONTRACTORS

§ 12.1 The term "Separate Contractor(s)" shall mean other contractors retained by the Owner under separate agreements. The Owner reserves the right to perform construction or operations related to the Project with the Owner's own forces, and with Separate Contractors retained under Conditions of the Contract substantially similar to those of this Contract, including those provisions of the Conditions of the Contract related to insurance and waiver of subrogation. This section should only apply for out-of-scope work whereby separate contractors are retained by the Owner.

§ 12.2 The Contractor shall afford the Owner and Separate Contractors reasonable opportunity for introduction and storage of their materials and equipment and performance of their activities, and shall connect and coordinate the Contractor's activities with theirs as required by the Contract Documents.

ARTICLE 13 CHANGES IN THE WORK

§ 13.1 By appropriate Modification, changes in the Work may be accomplished after execution of the Contract. The Owner, without invalidating the Contract, may order changes in the Work within the general scope of the Contract consisting of additions, deletions, or other revisions, with the Contract Sum and Contract Time being adjusted accordingly. Such changes in the Work shall be authorized by written Change Order signed by the Owner, Contractor, and Architect, or by written Construction Change Directive signed by the Owner and Architect. Upon issuance of the Change Order or Construction Change Directive, the Contractor shall proceed promptly with such changes in the Work, unless otherwise provided in the Change Order or Construction Change Directive. Agreement on any Change Order shall constitute a final settlement and release of all claims by the Contractor relating to the changed work that is subject to the Change Order including, but not limited to, all direct and indirect costs associated with such change and any and all adjustments to the Contract Sum and the Contract Schedule including any and all claims of the Contractor to the date of the Change Order. In the event that the Owner has any claims

AIA Document A104™ – 2017 (formerly A107™ – 2007). Copyright © 1936, 1951, 1958, 1961, 1963, 1966, 1970, 1974, 1978, 1987, 1997, 2007 and 2017 by The American Institute of Architects. All rights reserved. The "American Institute of Architects," "AIA," the AIA Logo, and "AIA Contract Documents" are registered trademarks and may not be used without permission. This draft was produced by AIA software at 11:30:12 ET on 02/01/2021 under Order No.2827020581 which expires on 04/09/2021, is not for resale, is licensed for one-time use only, and may only be used in accordance with the AIA Contract Documents® Terms of Service. To report copyright violations, e-mail copyright@aia.org.
User Notes: (812404280)

against the Contractor, the Owner shall notify the Contractor in writing by the 30th day of each month during construction.

§ 13.2 Adjustments in the Contract Sum and Contract Time resulting from a change in the Work shall be determined by mutual agreement of the parties or, in the case of a Construction Change Directive signed only by the Owner and Architect, by the Contractor's cost of labor, material, equipment, and reasonable overhead and profit, unless the parties agree on another method for determining the cost or credit. Pending final determination of the total cost of a Construction Change Directive, the Contractor may request payment for Work completed pursuant to the Construction Change Directive. The Architect will make an interim determination of the amount of payment due for purposes of certifying the Contractor's monthly Application for Payment. When the Owner and Contractor agree on adjustments to the Contract Sum and Contract Time arising from a Construction Change Directive, the Architect will prepare a Change Order. Contractor's overhead and profit on any change shall be limited to Fifteen (15%) Percent.

§ 13.3 The Architect will have authority to order minor changes in the Work not involving adjustment in the Contract Sum or extension of the Contract Time and not inconsistent with the intent of the Contract Documents. Such changes shall be effected by written order and shall be binding on the Owner and Contractor. The Contractor shall carry out such written orders promptly. If the Contractor believes that the proposed minor change in the Work will affect the Contract Sum or Contract Time, the Contractor shall notify the Architect and shall not proceed to implement the change in the Work.

§ 13.4 If concealed or unknown physical conditions are encountered at the site that differ materially from those indicated in the Contract Documents or from those conditions ordinarily found to exist, the Contract Sum and Contract Time shall be equitably adjusted as mutually agreed between the Owner and Contractor; provided that the Contractor provides notice to the Owner and Architect promptly and before conditions are disturbed.

ARTICLE 14 TIME

§ 14.1 Time limits stated in the Contract Documents are of the essence of the Contract. By executing this Agreement the Contractor confirms that the Contract Time is a reasonable period for performing the Work.

§ 14.2 Unless otherwise provided, Contract Time is the period of time, including authorized adjustments, allotted in the Contract Documents for Substantial Completion of the Work.

§ 14.3 The term "day" as used in the Contract Documents shall mean calendar day unless otherwise specifically defined.

§ 14.4 The date of Substantial Completion is the date certified by the Architect in accordance with Section 15.6.3.

§ 14.5 If the Contractor is delayed at any time in the commencement or progress of the Work by (1) changes ordered in the Work; (2) by labor disputes, fire, unusual delay in deliveries, abnormal adverse weather conditions not reasonably anticipatable, unavoidable casualties, or any causes beyond the Contractor's control; or (3) by other causes that the Contractor asserts, and the Architect determines, justify delay, then the Contract Time shall be extended for such reasonable time as the Architect may determine, subject to the provisions of Article 21.

ARTICLE 15 PAYMENTS AND COMPLETION

§ 15.1 Schedule of Values

§ 15.1.1 Where the Contract is based on a Stipulated Sum or the Cost of the Work with a Guaranteed Maximum Price pursuant to Section 3.2 or 3.4, the Contractor shall submit a schedule of values to the Architect before the first Application for Payment, allocating the entire Stipulated Sum or Guaranteed Maximum Price to the various portions of the Work. The schedule of values shall be prepared in the form, and supported by the data to substantiate its accuracy required by the Architect. This schedule of values shall be used as a basis for reviewing the Contractor's Applications for Payment. Contractor's Schedule of Values is noted in **EXHIBIT G** attached hereto.

§ 15.1.2 The allocation of the Stipulated Sum or Guaranteed Maximum Price under this Section 15.1 shall not constitute a separate stipulated sum or guaranteed maximum price for each individual line item in the schedule of values.

AIA Document A104™ – 2017 (formerly A107™ – 2007). Copyright © 1936, 1951, 1958, 1961, 1963, 1966, 1970, 1974, 1978, 1987, 1997, 2007 and 2017 by The American Institute of Architects. All rights reserved. The "American Institute of Architects," "AIA," the AIA Logo, and "AIA Contract Documents" are registered trademarks and may not be used without permission. This draft was produced by AIA software at 11:30:12 ET on 02/01/2021 under Order No.2827020581 which expires on 04/09/2021, is not for resale, is licensed for one-time use only, and may only be used in accordance with the AIA Contract Documents® Terms of Service. To report copyright violations, e-mail copyright@aia.org.
User Notes: (812404280)

§ 15.2

§ 15.3.3 Payments shall be made on account of materials and equipment delivered and suitably stored at the site for subsequent incorporation in the Work. If approved in advance by the Owner, payment may similarly be made for materials and equipment stored, and protected from damage, off the site at a location agreed upon in writing.

§ 15.3.4 The Contractor warrants that title to all Work covered by an Application for Payment will pass to the Owner no later than the time of payment. The Contractor further warrants that upon submittal of an Application for Payment all Work for which Certificates for Payment have been previously issued and payments received from the Owner shall, to the best of the Contractor's knowledge, information and belief, be free and clear of liens, claims, security interests or other encumbrances adverse to the Owner's interests.

§ 15.4 Certificates for Payment

§ 15.4.1 The Architect will, within seven days after receipt of the Contractor's Application for Payment, either issue to the Owner a Certificate for Payment, with a copy to the Contractor, for such amount as the Architect determines is properly due, or notify the Contractor and Owner of the Architect's reasons for withholding certification in whole or in part as provided in Section 15.4.3.

§ 15.4.2 The issuance of a Certificate for Payment will constitute a representation by the Architect to the Owner, based on the Architect's evaluations of the Work and the data in the Application for Payment, that, to the best of the Architect's knowledge, information, and belief, the Work has progressed to the point indicated, the quality of the Work is in accordance with the Contract Documents, and the Contractor is entitled to payment in the amount certified. The foregoing representations are subject to an evaluation of the Work for conformance with the Contract Documents upon Substantial Completion, to results of subsequent tests and inspections, to correction of minor deviations from the Contract Documents prior to completion and to specific qualifications expressed by the Architect. However, the issuance of a Certificate for Payment will not be a representation that the Architect has (1) made exhaustive or continuous on-site inspections to check the quality or quantity of the Work; (2) reviewed construction means, methods, techniques, sequences, or procedures; (3) reviewed copies of requisitions received from Subcontractors and suppliers and other data requested by the Owner to substantiate the Contractor's right to payment; or (4) made examination to ascertain how or for what purpose the Contractor has used money previously paid on account of the Contract Sum.

§ 15.4.3 The Architect may withhold a Certificate for Payment in whole or in part, to the extent reasonably necessary to protect the Owner, if in the Architect's opinion the representations to the Owner required by Section 15.4.2 cannot be made. If the Architect is unable to certify payment in the amount of the Application, the Architect will notify the Contractor and Owner as provided in Section 15.4.1. If the Contractor and the Architect cannot agree on a revised amount, the Architect will promptly issue a Certificate for Payment for the amount for which the Architect is able to make such representations to the Owner. The Architect may also withhold a Certificate for Payment or, because of subsequently discovered evidence, may nullify the whole or a part of a Certificate for Payment previously issued, to such extent as may be necessary in the Architect's opinion to protect the Owner from loss for which the Contractor is responsible, including loss resulting from acts and omissions described in Section 9.2.2, because of

- **.1** defective Work not remedied;
- **.2** third-party claims filed or reasonable evidence indicating probable filing of such claims unless security acceptable to the Owner is provided by the Contractor;
- **.3** failure of the Contractor to make payments properly to Subcontractors or suppliers for labor, materials or equipment;
- **.4** reasonable evidence that the Work cannot be completed for the unpaid balance of the Contract Sum;
- **.5** damage to the Owner or a Separate Contractor;
- **.6** reasonable evidence that the Work will not be completed within the Contract Time and that the unpaid balance would not be adequate to cover actual or liquidated damages for the anticipated delay; or
- **.7** repeated failure to carry out the Work in accordance with the Contract Documents;
- **.8** failure to provide Owner with Partial or Final Releases.

§ 15.4.4 When either party disputes the Architect's decision regarding a Certificate for Payment under Section 15.4.3, in whole or in part, that party may submit a Claim in accordance with Article 21.

AIA Document A104™ – 2017 (formerly A107™ – 2007). Copyright © 1936, 1951, 1958, 1961, 1963, 1966, 1970, 1974, 1978, 1987, 1997, 2007 and 2017 by The American Institute of Architects. All rights reserved. The "American Institute of Architects," "AIA," the AIA Logo, and "AIA Contract Documents" are registered trademarks and may not be used without permission. This draft was produced by AIA software at 11:30:12 ET on 02/01/2021 under Order No.2827020581 which expires on 04/09/2021, is not for resale, is licensed for one-time use only, and may only be used in accordance with the AIA Contract Documents® Terms of Service. To report copyright violations, e-mail copyright@aia.org.
User Notes: (812404280)

§ 15.5 Progress Payments

§ 15.5.1 The Contractor shall pay each Subcontractor, no later than seven days after receipt of payment from the Owner, the amount to which the Subcontractor is entitled, reflecting percentages actually retained from payments to the Contractor on account of the Subcontractor's portion of the Work. The Contractor shall, by appropriate agreement with each Subcontractor, require each Subcontractor to make payments to sub-subcontractors in a similar manner.

§ 15.5.2 Neither the Owner nor Architect shall have an obligation to pay or see to the payment of money to a Subcontractor or supplier except as may otherwise be required by law.

§ 15.5.3 A Certificate for Payment, a progress payment, or partial or entire use or occupancy of the Project by the Owner shall not constitute acceptance of Work not in accordance with the Contract Documents.

§ 15.5.4 Provided the Owner has fulfilled its payment obligations under the Contract Documents, the Contractor shall defend and indemnify the Owner from all loss, liability, damage or expense, including reasonable attorney's fees and litigation expenses, arising out of any lien claim or other claim for payment by any Subcontractor or supplier of any tier. Upon receipt of notice of a lien claim or other claim for payment, the Owner shall notify the Contractor. If approved by the applicable court, when required, the Contractor may substitute a surety bond for the property against which the lien or other claim for payment has been asserted.

§ 15.6 Substantial Completion

§ 15.6.1 Substantial Completion is the stage in the progress of the Work when the Work or designated portion thereof is sufficiently complete in accordance with the Contract Documents so that the Owner can occupy or utilize the Work for its intended use.

§ 15.6.2 When the Contractor considers that the Work, or a portion thereof which the Owner agrees to accept separately, is substantially complete, the Contractor shall prepare and submit to the Architect a comprehensive list of items to be completed or corrected prior to final payment. Failure to include an item on such list does not alter the responsibility of the Contractor to complete all Work in accordance with the Contract Documents.

§ 15.6.3 Upon receipt of the Contractor's list, the Architect will make an inspection to determine whether the Work or designated portion thereof is substantially complete. When the Architect determines that the Work or designated portion thereof is substantially complete, the Architect will issue a Certificate of Substantial Completion which shall establish the date of Substantial Completion; establish responsibilities of the Owner and Contractor for security, maintenance, heat, utilities, damage to the Work and insurance; and fix the time within which the Contractor shall finish all items on the list accompanying the Certificate. Warranties required by the Contract Documents shall commence on the date of Substantial Completion of the Work or designated portion thereof unless otherwise provided in the Certificate of Substantial Completion.

§ 15.6.4 The Certificate of Substantial Completion shall be submitted to the Owner and Contractor for their written acceptance of responsibilities assigned to them in the Certificate. Upon such acceptance and consent of surety, if any, the Owner shall make payment of retainage applying to the Work or designated portion thereof. Such payment shall be adjusted for Work that is incomplete or not in accordance with the requirements of the Contract Documents.

§ 15.7 Final Completion and Final Payment

§ 15.7.1 Upon receipt of the Contractor's notice that the Work is ready for final inspection and acceptance and upon receipt of a final Application for Payment, the Architect will promptly make such inspection and, when the Architect finds the Work acceptable under the Contract Documents and the Contract fully performed, the Architect will promptly issue a final Certificate for Payment stating that to the best of the Architect's knowledge, information and belief, and on the basis of the Architect's on-site visits and inspections, the Work has been completed in accordance with the Contract Documents and that the entire balance found to be due the Contractor and noted in the final Certificate is due and payable. The Architect's final Certificate for Payment will constitute a further representation that conditions stated in Section 15.7.2 as precedent to the Contractor's being entitled to final payment have been fulfilled.

AIA Document A104™ – 2017 (formerly A107™ – 2007). Copyright © 1936, 1951, 1958, 1961, 1963, 1966, 1970, 1974, 1978, 1987, 1997, 2007 and 2017 by The American Institute of Architects. All rights reserved. The "American Institute of Architects," "AIA," the AIA Logo, and "AIA Contract Documents" are registered trademarks and may not be used without permission. This draft was produced by AIA software at 11:30:12 ET on 02/01/2021 under Order No.2827020581 which expires on 04/09/2021, is not for resale, is licensed for one-time use only, and may only be used in accordance with the AIA Contract Documents® Terms of Service. To report copyright violations, e-mail copyright@aia.org.
User Notes: (812404280)

§ 15.7.2 Final payment shall not become due until the Contractor has delivered to the Owner a complete release of all liens arising out of this Contract or receipts in full covering all labor, materials and equipment for which a lien could be filed, or a bond satisfactory to the Owner to indemnify the Owner against such lien. If such lien remains unsatisfied after payments are made, the Contractor shall refund to the Owner all money that the Owner may be compelled to pay in discharging such lien, including costs and reasonable attorneys' fees.

§ 15.7.3 The making of final payment shall constitute a waiver of claims by the Owner except those arising from

- **.1** liens, claims, security interests or encumbrances arising out of the Contract and unsettled;
- **.2** failure of the Work to comply with the requirements of the Contract Documents;
- **.3** terms of special warranties required by the Contract Documents; or
- **.4** audits performed by the Owner, if permitted by the Contract Documents, after final payment.

§ 15.7.4 Acceptance of final payment by the Contractor, a Subcontractor or supplier shall constitute a waiver of claims by that payee except those previously made in writing and identified by that payee as unsettled at the time of the final Application for Payment.

ARTICLE 16 PROTECTION OF PERSONS AND PROPERTY – Contractor's Safety Program is attached hereto as EXHIBIT J

§ 16.1 Safety Precautions and Programs

The Contractor shall be responsible for initiating, maintaining, and supervising all safety precautions and programs in connection with the performance of the Contract. The Contractor shall take reasonable precautions for safety of, and shall provide reasonable protection to prevent damage, injury, or loss to

- **.1** employees on the Work and other persons who may be affected thereby;
- **.2** the Work and materials and equipment to be incorporated therein, whether in storage on or off the site, under care, custody, or control of the Contractor, a Subcontractor, or a Sub-subcontractor; and
- **.3** other property at the site or adjacent thereto, such as trees, shrubs, lawns, walks, pavements, roadways, structures and utilities not designated for removal, relocation, or replacement in the course of construction.

The Contractor shall comply with, and give notices required by, applicable laws, statutes, ordinances, codes, rules and regulations, and lawful orders of public authorities bearing on safety of persons and property and their protection from damage, injury, or loss. The Contractor shall promptly remedy damage and loss to property caused in whole or in part by the Contractor, a Subcontractor, a sub-subcontractor, or anyone directly or indirectly employed by any of them, or by anyone for whose acts they may be liable and for which the Contractor is responsible under Sections 16.1.2 and 16.1.3. The Contractor may make a claim for the cost to remedy the damage or loss to the extent such damage or loss is attributable to acts or omissions of the Owner or Architect or by anyone for whose acts either of them may be liable, and not attributable to the fault or negligence of the Contractor. The foregoing obligations of the Contractor are in addition to the Contractor's obligations under Section 9.15.

§ 16.2 Hazardous Materials and Substances

§ 16.2.1 The Contractor is responsible for compliance with the requirements of the Contract Documents regarding hazardous materials or substances. If the Contractor encounters a hazardous material or substance not addressed in the Contract Documents, and if reasonable precautions will be inadequate to prevent foreseeable bodily injury or death to persons resulting from a material or substance, including but not limited to asbestos or polychlorinated biphenyl (PCB), encountered on the site by the Contractor, the Contractor shall, upon recognizing the condition, immediately stop Work in the affected area and notify the Owner and Architect of the condition. When the material or substance has been rendered harmless, Work in the affected area shall resume upon written agreement of the Owner and Contractor. By Change Order, the Contract Time shall be extended appropriately and the Contract Sum shall be increased in the amount of the Contractor's reasonable additional costs of shutdown, delay, and start-up.

§ 16.2.2 To the fullest extent permitted by law, the Owner shall indemnify and hold harmless the Contractor, Subcontractors, Architect, Architect's consultants, and agents and employees of any of them from and against claims, damages, losses, and expenses, including but not limited to attorneys' fees, arising out of or resulting from performance of the Work in the affected area, if in fact, the material or substance presents the risk of bodily injury or death as described in Section 16.2.1 and has not been rendered harmless, provided that such claim, damage, loss, or expense is attributable to bodily injury, sickness, disease or death, or to injury to or destruction of tangible property

AIA Document A104™ – 2017 (formerly A107™ – 2007). Copyright © 1936, 1951, 1958, 1961, 1963, 1966, 1970, 1974, 1978, 1987, 1997, 2007 and 2017 by The American Institute of Architects. All rights reserved. The "American Institute of Architects," "AIA," the AIA Logo, and "AIA Contract Documents" are registered trademarks and may not be used without permission. This draft was produced by AIA software at 11:30:12 ET on 02/01/2021 under Order No.2827020581 which expires on 04/09/2021, is not for resale, is licensed for one-time use only, and may only be used in accordance with the AIA Contract Documents® Terms of Service. To report copyright violations, e-mail copyright@aia.org.
User Notes: (812404280)

(other than the Work itself), except to the extent that such damage, loss, or expense is due to the fault or negligence of the party seeking indemnity.

§ 16.2.3 If, without negligence on the part of the Contractor, the Contractor is held liable by a government agency for the cost of remediation of a hazardous material or substance solely by reason of performing Work as required by the Contract Documents, the Owner shall indemnify the Contractor for all cost and expense thereby incurred.

ARTICLE 17 INSURANCE AND BONDS – SEE EXHIBIT H

§ 17.1 Contractor's Insurance

§ 17.1.1 The Contractor shall purchase and maintain insurance of the types and limits of liability, containing the endorsements, and subject to the terms and conditions, as described in this Section 17.1 or elsewhere in the Contract Documents. The Contractor shall purchase and maintain the insurance required by this Agreement from an insurance company or insurance companies lawfully authorized to issue insurance in the jurisdiction where the Project is located. The Contractor shall maintain the required insurance until the expiration of the period for correction of Work as set forth in Section 18.4, unless a different duration is stated below:

« »

§ 17.1.2 Commercial General Liability insurance for the Project written on an occurrence form with policy limits of not less than «One Million Dollars » ($ «1,000,000 ») each occurrence, «Two Million Dollars » ($ «2,000,000 ») general aggregate, and «Two Million Dollars » ($ «2,000,000 ») aggregate for products-completed operations hazard, providing coverage for claims including

- **.1** damages because of bodily injury, sickness or disease, including occupational sickness or disease, and death of any person;
- **.2** personal and advertising injury;
- **.3** damages because of physical damage to or destruction of tangible property, including the loss of use of such property;
- **.4** bodily injury or property damage arising out of completed operations; and
- **.5** the Contractor's indemnity obligations under Section 9.15.

§ 17.1.3 Automobile Liability covering vehicles owned by the Contractor and non-owned vehicles used by the Contractor, with policy limits of not less than «One Million Dollars » ($ «1,000,000 ») per accident, for bodily injury, death of any person, and property damage arising out of the ownership, maintenance, and use of those motor vehicles along with any other statutorily required automobile coverage.

§ 17.1.4 The Contractor may achieve the required limits and coverage for Commercial General Liability and Automobile Liability through a combination of primary and excess or umbrella liability insurance, provided such primary and excess or umbrella insurance policies result in the same or greater coverage as those required under Section 17.1.2 and 17.1.3, and in no event shall any excess or umbrella liability insurance provide narrower coverage than the primary policy. The excess policy shall not require the exhaustion of the underlying limits only through the actual payment by the underlying insurers.

§ 17.1.5 Workers' Compensation at Rhode Island statutory limits.

§ 17.1.6 Employers' Liability with policy limits not less than «One Million Dollars » ($ « 1,000,000 ») each accident, « » ($ « ») each employee, and « » ($ « ») policy limit.

§ 17.1.7 If the Contractor is required to furnish professional services as part of the Work, the Contractor shall procure Professional Liability insurance covering performance of the professional services, with policy limits of not less than « » ($ « ») per claim and « » ($ « ») in the aggregate.

§ 17.1.8 If the Work involves the transport, dissemination, use, or release of pollutants, the Contractor shall procure Pollution Liability insurance, with policy limits of not less than « Two Million Dollars » ($ «2,000,000 ») per claim and « » ($ « ») in the aggregate.

AIA Document A104™ – 2017 (formerly A107™ – 2007). Copyright © 1936, 1951, 1958, 1961, 1963, 1966, 1970, 1974, 1978, 1987, 1997, 2007 and 2017 by The American Institute of Architects. All rights reserved. The "American Institute of Architects," "AIA," the AIA Logo, and "AIA Contract Documents" are registered trademarks and may not be used without permission. This draft was produced by AIA software at 11:30:12 ET on 02/01/2021 under Order No.2827020581 which expires on 04/09/2021, is not for resale, is licensed for one-time use only, and may only be used in accordance with the AIA Contract Documents® Terms of Service. To report copyright violations, e-mail copyright@aia.org.
User Notes: (812404280)

§ 17.1.9 Coverage under Sections 17.1.7 and 17.1.8 may be procured through a Combined Professional Liability and Pollution Liability insurance policy, with combined policy limits of not less than « Two Million Dollars » ($ «2,000,000 ») per claim and «Two Million Dollars » ($ «2,000,000 ») in the aggregate.

§ 17.1.10 The Contractor shall provide certificates of insurance acceptable to the Owner evidencing compliance with the requirements in this Section 17.1 at the following times: (1) prior to commencement of the Work; (2) upon renewal or replacement of each required policy of insurance; and (3) upon the Owner's written request. An additional certificate evidencing continuation of liability coverage, including coverage for completed operations, shall be submitted with the final Application for Payment and thereafter upon renewal or replacement of such coverage until the expiration of the period required by Section 17.1.1. The certificates will show the Owner as an additional insured on the Contractor's Commercial General Liability and excess or umbrella liability policy. THE **CONTRACTOR SHALL PROVIDE THE OWNER WITH AN ENDORSEMENT FOR ADDITIONAL INSURED COVERAGE.**

§ 17.1.11 The Contractor shall disclose to the Owner any deductible or self- insured retentions applicable to any insurance required to be provided by the Contractor.

§ 17.1.12 To the fullest extent permitted by law, the Contractor shall cause the commercial liability coverage required by this Section 17.1 to include (1) the Owner, the Architect, and the Architect's Consultants as additional insureds for claims caused in whole or in part by the Contractor's negligent acts or omissions during the Contractor's operations; and (2) the Owner as an additional insured for claims caused in whole or in part by the Contractor's negligent acts or omissions for which loss occurs during completed operations. The additional insured coverage shall be primary and non-contributory to any of the Owner's general liability insurance policies and shall apply to both ongoing and completed operations. To the extent commercially available, the additional insured coverage shall be no less than that provided by Insurance Services Office, Inc. (ISO) forms CG 20 10 07 04, CG 20 37 07 04, and, with respect to the Architect and the Architect's Consultants, CG 20 32 07 04.

§ 17.1.13 Within three (3) business days of the date the Contractor becomes aware of an impending or actual cancellation or expiration of any insurance required by this Section 17.1, the Contractor shall provide notice to the Owner of such impending or actual cancellation or expiration. Upon receipt of notice from the Contractor, the Owner shall, unless the lapse in coverage arises from an act or omission of the Owner, have the right to stop the Work until the lapse in coverage has been cured by the procurement of replacement coverage by the Contractor. The furnishing of notice by the Contractor shall not relieve the Contractor of any contractual obligation to provide any required coverage.

§ 17.1.14 Other Insurance Provided by the Contractor
(List below any other insurance coverage to be provided by the Contractor and any applicable limits.)

Coverage	Limits
Umbrella Liability	$5,000,000

§ 17.2 Owner's Insurance
§ 17.2.1 Owner's Liability Insurance
The Owner shall be responsible for purchasing and maintaining the Owner's usual liability insurance.

§ 17.2.2 Property Insurance
§ 17.2.2.1 The Owner shall purchase and maintain, from an insurance company or insurance companies lawfully authorized to issue insurance in the jurisdiction where the Project is located, property insurance written on a builder's risk "all-risks" completed value or equivalent policy form and sufficient to cover the total value of the entire Project on a replacement cost basis. The Owner's property insurance coverage shall be no less than the amount of the initial Contract Sum, plus the value of subsequent Modifications and labor performed or materials or equipment supplied by others. The property insurance shall be maintained until Substantial Completion and thereafter as provided in Section 17.2.2.2, unless otherwise provided in the Contract Documents or otherwise agreed in writing by the parties to this Agreement. This insurance shall include the interests of the Owner, Contractor, Subcontractors, and Sub-subcontractors in the Project as insureds. This insurance shall include the interests of mortgagees as loss payees.

AIA Document A104™ – 2017 (formerly A107™ – 2007). Copyright © 1936, 1951, 1958, 1961, 1963, 1966, 1970, 1974, 1978, 1987, 1997, 2007 and 2017 by The American Institute of Architects. All rights reserved. The "American Institute of Architects," "AIA," the AIA Logo, and "AIA Contract Documents" are registered trademarks and may not be used without permission. This draft was produced by AIA software at 11:30:12 ET on 02/01/2021 under Order No.2827020581 which expires on 04/09/2021, is not for resale, is licensed for one-time use only, and may only be used in accordance with the AIA Contract Documents® Terms of Service. To report copyright violations, e-mail copyright@aia.org.
User Notes: (812404280)

§ 17.2.2.2 Unless the parties agree otherwise, upon Substantial Completion, the Owner shall continue the insurance required by Section 17.2.2.1 or, if necessary, replace the insurance policy required under Section 17.2.2.1 with property insurance written for the total value of the Project that shall remain in effect until expiration of the period for correction of the Work set forth in Section 18.4.

§ 17.2.2.3 If the insurance required by this Section 17.2.2 is subject to deductibles or self-insured retentions, the Owner shall be responsible for all loss not covered because of such deductibles or retentions.

§ 17.2.2.4 If the Work involves remodeling an existing structure or constructing an addition to an existing structure, the Owner shall purchase and maintain, until the expiration of the period for correction of Work as set forth in Section 18.4, "all-risks" property insurance, on a replacement cost basis, protecting the existing structure against direct physical loss or damage, notwithstanding the undertaking of the Work. The Owner shall be responsible for all co-insurance penalties.

§ 17.2.2.5 Prior to commencement of the Work, the Owner shall secure the insurance, and provide evidence of the coverage, required under this Section 17.2.2 and, upon the Contractor's request, provide a copy of the property insurance policy or policies required by this Section 17.2.2. The copy of the policy or policies provided shall contain all applicable conditions, definitions, exclusions, and endorsements.

§ 17.2.2.6 Within three (3) business days of the date the Owner becomes aware of an impending or actual cancellation or expiration of any insurance required by this Section 17.2.2, the Owner shall provide notice to the Contractor of such impending or actual cancellation or expiration. Unless the lapse in coverage arises from an act or omission of the Contractor: (1) the Contractor, upon receipt of notice from the Owner, shall have the right to stop the Work until the lapse in coverage has been cured by the procurement of replacement coverage by either the Owner or the Contractor; (2) the Contract Time and Contract Sum shall be equitably adjusted; and (3) the Owner waives all rights against the Contractor, Subcontractors, and Sub-subcontractors to the extent any loss to the Owner would have been covered by the insurance had it not expired or been cancelled. If the Contractor purchases replacement coverage, the cost of the insurance shall be charged to the Owner by an appropriate Change Order. The furnishing of notice by the Owner shall not relieve the Owner of any contractual obligation to provide required insurance.

§ 17.2.2.7 Waiver of Subrogation

§ 17.2.2.7.1 The Owner and Contractor waive all rights against (1) each other and any of their subcontractors, sub-subcontractors, agents, and employees, each of the other; (2) the Architect and Architect's consultants; and (3) Separate Contractors, if any, and any of their subcontractors, sub-subcontractors, agents, and employees, for damages caused by fire, or other causes of loss, to the extent those losses are covered by property insurance required by this Agreement or other property insurance applicable to the Project, except such rights as they have to proceeds of such insurance. The Owner or Contractor, as appropriate, shall require similar written waivers in favor of the individuals and entities identified above from the Architect, Architect's consultants, Separate Contractors, subcontractors, and sub-subcontractors. The policies of insurance purchased and maintained by each person or entity agreeing to waive claims pursuant to this Section 17.2.2.7 shall not prohibit this waiver of subrogation. This waiver of subrogation shall be effective as to a person or entity (1) even though that person or entity would otherwise have a duty of indemnification, contractual or otherwise, (2) even though that person or entity did not pay the insurance premium directly or indirectly, or (3) whether or not the person or entity had an insurable interest in the damaged property.

§ 17.2.2.7.2 If during the Project construction period the Owner insures properties, real or personal or both, at or adjacent to the site by property insurance under policies separate from those insuring the Project, or if after final payment property insurance is to be provided on the completed Project through a policy or policies other than those insuring the Project during the construction period, to the extent permissible by such policies, the Owner waives all rights in accordance with the terms of Section 17.2.2.7.1 for damages caused by fire or other causes of loss covered by this separate property insurance.

§ 17.2.2.8 A loss insured under the Owner's property insurance shall be adjusted by the Owner as fiduciary and made payable to the Owner as fiduciary for the insureds, as their interests may appear, subject to requirements of any applicable mortgagee clause. The Owner shall pay the Architect and Contractor their just shares of insurance

AIA Document A104™ – 2017 (formerly A107™ – 2007). Copyright © 1936, 1951, 1958, 1961, 1963, 1966, 1970, 1974, 1978, 1987, 1997, 2007 and 2017 by The American Institute of Architects. All rights reserved. The "American Institute of Architects," "AIA," the AIA Logo, and "AIA Contract Documents" are registered trademarks and may not be used without permission. This draft was produced by AIA software at 11:30:12 ET on 02/01/2021 under Order No.2827020581 which expires on 04/09/2021, is not for resale, is licensed for one-time use only, and may only be used in accordance with the AIA Contract Documents® Terms of Service. To report copyright violations, e-mail copyright@aia.org.
User Notes: (812404280)

proceeds received by the Owner, and by appropriate agreements, written where legally required for validity, the Architect and Contractor shall make payments to their consultants and Subcontractors in similar manner.

§ 17.2.3 Other Insurance Provided by the Owner N/A
(List below any other insurance coverage to be provided by the Owner and any applicable limits.)

Coverage	Limits

§ 17.3 Performance Bond and Payment Bond SEE EXHIBIT I
§ 17.3.1 The Owner shall require the Contractor to furnish bonds covering faithful performance of the Contract and payment of obligations arising thereunder as stipulated in the Contract Documents on the date of execution of the Contract.
The Contractor shall provide the necessary Performance and Payment Bonds, i.e. statutory bonds pursuant to R.I.G.L. 37-12-1 and 37-13-14. Any bond shall be with a surety noted in the United States Federal Register of Sureties.

§ 17.3.2 Upon the request of any person or entity appearing to be a potential beneficiary of bonds covering payment of obligations arising under the Contract, the Contractor shall promptly furnish a copy of the bonds or shall authorize a copy to be furnished.

ARTICLE 18 CORRECTION OF WORK

§ 18.1 The Contractor shall promptly correct Work rejected by the Architect or failing to conform to the requirements of the Contract Documents, whether discovered before or after Substantial Completion and whether or not fabricated, installed, or completed. Costs of correcting such rejected Work, including additional testing and inspections, the cost of uncovering and replacement, and compensation for the Architect's services and expenses made necessary thereby, shall be at the Contractor's expense.

§ 18.2 In addition to the Contractor's obligations under Section 9.4, if, within one year after the date of Substantial Completion of the Work or designated portion thereof or after the date for commencement of warranties established under Section 15.6.3, or by terms of an applicable special warranty required by the Contract Documents, any of the Work is found to be not in accordance with the requirements of the Contract Documents, the Contractor shall correct it promptly after receipt of notice from the Owner to do so unless the Owner has previously given the Contractor a written acceptance of such condition. The Owner shall give such notice promptly after discovery of the condition. During the one-year period for correction of Work, if the Owner fails to notify the Contractor and give the Contractor an opportunity to make the correction, the Owner waives the rights to require correction by the Contractor and to make a claim for breach of warranty.

§ 18.3 If the Contractor fails to correct nonconforming Work within a reasonable time, the Owner may correct it in accordance with Section 8.3.

§ 18.4 The one-year period for correction of Work shall be extended with respect to portions of Work first performed after Substantial Completion by the period of time between Substantial Completion and the actual completion of that portion of the Work.

§ 18.5 The one-year period for correction of Work shall not be extended by corrective Work performed by the Contractor pursuant to this Article 18.

ARTICLE 19 MISCELLANEOUS PROVISIONS

§ 19.1 Assignment of Contract
Neither party to the Contract shall assign the Contract without written consent of the other, except that the Owner may, without consent of the Contractor, assign the Contract to a lender providing construction financing for the Project if the lender assumes the Owner's rights and obligations under the Contract Documents. The Contractor shall execute all consents reasonably required to facilitate such assignment.

AIA Document A104™ – 2017 (formerly A107™ – 2007). Copyright © 1936, 1951, 1958, 1961, 1963, 1966, 1970, 1974, 1978, 1987, 1997, 2007 and 2017 by The American Institute of Architects. All rights reserved. The "American Institute of Architects," "AIA," the AIA Logo, and "AIA Contract Documents" are registered trademarks and may not be used without permission. This draft was produced by AIA software at 11:30:12 ET on 02/01/2021 under Order No.2827020581 which expires on 04/09/2021, is not for resale, is licensed for one-time use only, and may only be used in accordance with the AIA Contract Documents® Terms of Service. To report copyright violations, e-mail copyright@aia.org.
User Notes: (812404280)

§ 19.2 Governing Law
The Contract shall be governed by the law of the place where the Project is located, excluding that jurisdiction's choice of law rules. If the parties have selected arbitration as the method of binding dispute resolution, the Federal Arbitration Act shall govern Section 21.6.

§ 19.3 Tests and Inspections
Tests, inspections, and approvals of portions of the Work required by the Contract Documents or by applicable laws, statutes, ordinances, codes, rules and regulations, or lawful orders of public authorities shall be made at an appropriate time. Unless otherwise provided, the Contractor shall make arrangements for such tests, inspections, and approvals with an independent testing laboratory or entity acceptable to the Owner, or with the appropriate public authority, and shall bear all related costs of tests, inspections, and approvals. The Contractor shall give the Architect timely notice of when and where tests and inspections are to be made so that the Architect may be present for such procedures. The Owner shall bear costs of tests, inspections, or approvals that do not become requirements until after bids are received or negotiations concluded. The Owner shall directly arrange and pay for tests, inspections, or approvals where building codes or applicable laws or regulations so require.

§ 19.4 The Owner's representative:
(Name, address, email address and other information)

« **Brian F. Byrnes – Deputy Superintendent of Parks** »
« **Roger Williams Park – Dalrymple Boathouse** »
«**1000 Elmwood Avenue** »
« **Providence, RI 02905** »

§ 19.5 The Contractor's representative:
(Name, address, email address and other information)

«
»

§ 19.6 Neither the Owner's nor the Contractor's representative shall be changed without ten days' prior notice to the other party.

ARTICLE 20 TERMINATION OF THE CONTRACT
§ 20.1 Termination by the Contractor
If the Architect fails to certify payment as provided in Section 15.4.1 for a period of 30 days through no fault of the Contractor, or if the Owner fails to make payment as provided in Section 4.1.3 for a period of 30 days, the Contractor may, upon seven additional days' notice to the Owner and the Architect, terminate the Contract and recover from the Owner payment for Work executed, including reasonable overhead and profit, costs incurred by reason of such termination, and damages.

§ 20.2 Termination by the Owner for Cause
§ 20.2.1 The Owner may terminate the Contract if the Contractor

- **.1** repeatedly refuses or fails to supply enough properly skilled workers or proper materials;
- **.2** fails to make payment to Subcontractors for materials or labor in accordance with the respective agreements between the Contractor and the Subcontractors;
- **.3** repeatedly disregards applicable laws, statutes, ordinances, codes, rules and regulations, or lawful orders of a public authority; or
- **.4** otherwise is guilty of substantial breach of a provision of the Contract Documents.

§ 20.2.2 When any of the reasons described in Section 20.2.1 exists, the Owner, upon certification by the Architect that sufficient cause exists to justify such action, may, without prejudice to any other remedy the Owner may have and after giving the Contractor seven days' notice, terminate the Contract and take possession of the site and of all materials, equipment, tools, and construction equipment and machinery thereon owned by the Contractor and may finish the Work by whatever reasonable method the Owner may deem expedient. Upon request of the Contractor, the Owner shall furnish to the Contractor a detailed accounting of the costs incurred by the Owner in finishing the Work.

AIA Document A104™ – 2017 (formerly A107™ – 2007). Copyright © 1936, 1951, 1958, 1961, 1963, 1966, 1970, 1974, 1978, 1987, 1997, 2007 and 2017 by The American Institute of Architects. All rights reserved. The "American Institute of Architects," "AIA," the AIA Logo, and "AIA Contract Documents" are registered trademarks and may not be used without permission. This draft was produced by AIA software at 11:30:12 ET on 02/01/2021 under Order No.2827020581 which expires on 04/09/2021, is not for resale, is licensed for one-time use only, and may only be used in accordance with the AIA Contract Documents® Terms of Service. To report copyright violations, e-mail copyright@aia.org.
User Notes: (812404280)

§ 20.2.3 When the Owner terminates the Contract for one of the reasons stated in Section 20.2.1, the Contractor shall not be entitled to receive further payment until the Work is finished.

§ 20.2.4 If the unpaid balance of the Contract Sum exceeds costs of finishing the Work, including compensation for the Architect's services and expenses made necessary thereby, and other damages incurred by the Owner and not expressly waived, such excess shall be paid to the Contractor. If such costs and damages exceed the unpaid balance, the Contractor shall pay the difference to the Owner. The amount to be paid to the Contractor or Owner, as the case may be, shall be certified by the Architect, upon application, and this obligation for payment shall survive termination of the Contract.

§ 20.3 Termination by the Owner for Convenience

The Owner may, at any time, terminate the Contract for the Owner's convenience and without cause. The Owner shall pay the Contractor for Work executed; and costs incurred by reason of such termination, including costs attributable to termination of Subcontracts; and a termination fee, if any, as follows:
(Insert the amount of or method for determining the fee payable to the Contractor by the Owner following a termination for the Owner's convenience, if any.)

« »

ARTICLE 21 CLAIMS AND DISPUTES

§ 21.1 DELETED

§ 21.2 Notice of Claims

§ 21.2.1 Claims by either the Owner or Contractor, where the condition giving rise to the Claim is first discovered prior to expiration of the period for correction of the Work set forth in Section 18.2, shall be initiated by notice to the Architect within 3 days after occurrence of the event giving rise to such Claim or within 3 days after the claimant first recognizes the condition giving rise to the Claim, whichever is later.

§ 21.2.2 Claims by either the Owner or Contractor, where the condition giving rise to the Claim is first discovered after expiration of the period for correction of the Work set forth in Section 18.2, shall be initiated by notice to the other party.

§ 21.3 Time Limits on Claims

The Owner and Contractor shall commence all claims and causes of action against the other and arising out of or related to the Contract in accordance with the requirements of the final dispute resolution method selected in this Agreement whether in contract, tort, breach of warranty, or otherwise, within the period specified by applicable law, but in any case not more than 10 years after the date of Substantial Completion of the Work. The Owner and Contractor waive all claims and causes of action not commenced in accordance with this Section 21.3.

§ 21.4 The parties shall endeavor to resolve their disputes by mediation with a mutually agreed upon Mediator, shall be administered by the American Arbitration Association in accordance with their Construction Industry Mediation Procedures in effect on the date of this Agreement. A request for mediation shall be made in writing, delivered to the other party to this Agreement, and filed with the person or entity administering the mediation. The request may be made concurrently with the binding dispute resolution but, in such event, mediation shall proceed in advance of binding dispute resolution proceedings, which shall be stayed pending mediation for a period of 60 days from the date of filing, unless stayed for a longer period by agreement of the parties or court order. If an arbitration is stayed pursuant to this Section, the parties may nonetheless proceed to the selection of the arbitrator(s) and agree upon a schedule for later proceedings.

§ 21.5 If the parties have selected arbitration as the method for binding dispute resolution in this Agreement, any claim, subject to, but not resolved by, mediation shall be subject to arbitration which, unless the parties mutually agree otherwise, shall be administered pursuant to the Rhode Island Public Works Arbitration Act, 37-16-1 et. seq.. Demand for arbitration shall be made in writing, delivered to the other party to the Contract, and filed with the person or entity administering the arbitration. The award rendered by the arbitrator or arbitrators shall be final, and judgment may be entered upon it in accordance with applicable law in any court having jurisdiction thereof.

AIA Document A104™ – 2017 (formerly A107™ – 2007). Copyright © 1936, 1951, 1958, 1961, 1963, 1966, 1970, 1974, 1978, 1987, 1997, 2007 and 2017 by The American Institute of Architects. All rights reserved. The "American Institute of Architects," "AIA," the AIA Logo, and "AIA Contract Documents" are registered trademarks and may not be used without permission. This draft was produced by AIA software at 11:30:12 ET on 02/01/2021 under Order No.2827020581 which expires on 04/09/2021, is not for resale, is licensed for one-time use only, and may only be used in accordance with the AIA Contract Documents® Terms of Service. To report copyright violations, e-mail copyright@aia.org.
User Notes: (812404280)

§ 21.6 The foregoing agreement to arbitrate and other agreements to arbitrate with an additional person or entity duly consented to by parties to this Agreement, shall be specifically enforceable under applicable law in any court having jurisdiction thereof.

§ 21.7 Continuing Contract Performance

Pending final resolution of a Claim, except as otherwise agreed in writing, the Contractor shall proceed diligently with performance of the Contract and the Owner shall continue to make payments in accordance with the Contract Documents.

This mutual waiver is applicable, without limitation, to all consequential damages due to either party's termination in accordance with Article 20. Nothing contained in this Section 21.11 shall be deemed to preclude an award of liquidated damages, when applicable, in accordance with the requirements of the Contract Documents.

ARTICLE 22 EXHIBIT LIST

§ 22.1 Exhibit List. See Exhibit List attached hereto.

This Agreement entered into as of the day and year first written above.

PROVIDENCE PUBLIC BUILDING AUTHORITY

OWNER *(Signature)*	**CONTRACTOR** *(Signature)*
Ron Crosson, Chairman	« »
(Printed name and title)	*(Printed name and title)*

DRAFT

AIA Document A104™ – 2017 (formerly A107™ – 2007). Copyright © 1936, 1951, 1958, 1961, 1963, 1966, 1970, 1974, 1978, 1987, 1997, 2007 and 2017 by The American Institute of Architects. All rights reserved. The "American Institute of Architects," "AIA," the AIA Logo, and "AIA Contract Documents" are registered trademarks and may not be used without permission. This draft was produced by AIA software at 11:30:12 ET on 02/01/2021 under Order No.2827020581 which expires on 04/09/2021, is not for resale, is licensed for one-time use only, and may only be used in accordance with the AIA Contract Documents® Terms of Service. To report copyright violations, e-mail copyright@aia.org.
User Notes: (812404280)

EXHIBIT LIST

In Relation to
AIA Document A104 - 2017
Dated September 19,2022

by and between
PROVIDENCE PUBLIC BUILDING AUTHORITY, Owner
and
US Pitchcare, LLC, **Contractor**

Project: Collyer Park Improvements – Re-Bid

EXHIBIT A	**Project Schedule N/A**
EXHIBIT B	**Contractor's Proposal and Specifications**
EXHIBIT C	**Applications for Payment (AIA G702 and G703)**
EXHIBIT D	**Partial Release of Lien** **Final Release of Lien**
EXHIBIT E	**Drawings**
EXHIBIT F	**Addenda – None**
EXHIBIT G	**Schedule of Values** N/A
EXHIBIT H	**Insurance** N/A
EXHIBIT I	**Performance and Payment Bond** N/A
EXHIBIT J	**Contractor's Safety Program** N/A

PARTIAL RELEASE

WHEREAS, the undersigned Contractor, Architect, Engineer and Consultant supplied labor, materials, equipment and/or services to the **Providence Public Building Authority** and the **City of Providence**, relative to improvements made to the property owned by **Providence Public Building Authority** and/or the **City of Providence**, which project was located at **????????** at the street address of **?????????**.

NOW, THEREFORE, the undersigned for and in consideration of payment in the amount of $_____, (for monies due Contractor, Architect, Engineer and Consultant through and including month/day/year) contingent upon the receipt of said payment, does hereby unconditionally and irrevocably waives and releases any and all actions, claims, demands, liens, damages, or any and all claims whatsoever against the **Providence Public Building Authority** and the **City of Providence**, the Project or the property whether arising at law, in equity or under the Mechanic's Lien law in the State of Rhode Island, which Contractor, Architect, Engineer and Consultant has or may have against the **Providence Public Building Authority** and the **City of Providence** or the property on account of labor, materials, equipment and/or services furnished for use at the project as of the date of the execution of this document. This Release does not release any pending change orders or retainage due or to become due to Contractor, Architect, Engineer and Consultant nor does this Release any of the following items:_____.

The undersigned warrants that all costs for labor, materials, equipment and/or services incurred by Contractor, Architect, Engineer and Consultant or its employees, consultants, subcontractors, sub-subcontractors, suppliers and all tiers have been paid or will be paid out of these proceeds by the undersigned. The Contractor, Architect, Engineer and Consultant warrants that no obligations, legal, equitable, or otherwise will be owed to any person arising out of or

from Contractor, Architect, Engineer and Consultant's work on the project that will not be satisfied by the payment set forth above for all work, labor, materials, equipment and/or services performed by or furnished to Contractor, Architect, Engineer and Consultant on the project up to and inclusive of the date this document is executed.

Contractor, Architect, Engineer and Consultant agrees to indemnify, defend and hold harmless the **Providence Public Building Authority** and the **City of Providence** from any claim, lien, damage, cost or expense brought by any employee, agent or consultant of Contractor, Architect, Engineer and Consultant, any subcontractor or lower tier subcontractor, and any material supplier relating to any labor, material and/or equipment furnished, supplied or performed for, or on behalf of the Contractor, Architect, Engineer and Consultant or the project to which payment was made to Contractor, Architect, Engineer and Consultant for the work performed.

By:

_____
(Name and Title)

STATE OF RHODE ISLAND

COUNTY OF _____

Subscribed and sworn to before me on this _____ day of _____, 2022.

_____
NOTARY PUBLIC
My Commission Expires: _____

FINAL RELEASE

WHEREAS, the undersigned Contractor, Architect, Engineer and Consultant supplied labor, materials, equipment and/or services to the **Providence Public Building Authority** and the **City of Providence**, relative to improvements made to the property owned by **Providence Public Building Authority** and/or the **City of Providence**, which project was located at the street address of **7 Cadillac Drive**.

NOW, THEREFORE, the undersigned for and in consideration of the final payment in the amount of $ 1,240.00, (for monies due Contractor, Architect, Engineer and Consultant through and including month/day/year) contingent upon the receipt of said payment, does hereby unconditionally and irrevocably waives and releases any and all actions, claims, demands, liens or other claims whatsoever against the **Providence Public Building Authority** and the **City of Providence**, the Project or the property whether arising at law, in equity or under the Mechanic's Lien law in the State of Rhode Island, which Contractor, Architect, Engineer and Consultant has or may have against the **Providence Public Building Authority** and the **City of Providence** or the property on account of labor, materials, equipment and/or services furnished for use at the project as of the date of the execution of this document.

The undersigned warrants that all costs for labor, materials, equipment and/or services incurred by Contractor, Architect, Engineer and Consultant or its employees, consultants, subcontractors, sub-subcontractors, suppliers and all tiers have been paid or will be paid out of these proceeds by the undersigned. The Contractor, Architect, Engineer and Consultant warrants that no obligations, legal, equitable, or otherwise will be owed to any person arising out of or from Contractor, Architect, Engineer and Consultant's work on the project that will not be satisfied out of the full and final payment set forth above for all work, labor, materials,

equipment and/or services performed by or furnished to Contractor, Architect, Engineer and Consultant on the project up to and inclusive of the date this document is executed.

Contractor, Architect, Engineer and Consultant agrees to indemnify, defend and hold harmless the **Providence Public Building Authority** and the **City of Providence** from any claim, lien, damage, cost or expense brought by any employee, agent or consultant of Contractor, Architect, Engineer and Consultant, any subcontractor or lower tier subcontractor, and any material supplier relating to any labor, material and/or equipment furnished, supplied or performed for, or on behalf of the Contractor, Architect, Engineer and Consultant or the project to which payment was made to Contractor, Architect, Engineer and Consultant for the work performed.

_____

By:

_____
(Name and Title)

STATE OF RHODE ISLAND

COUNTY OF _____

Subscribed and sworn to before me on this _____ day of _____, 2022.

_____
NOTARY PUBLIC
My Commission Expires: _____

SECTION 01 1000 – SUMMARY

PART 1 - GENERAL

1.1 RELATED DOCUMENTS

A. Drawings and general provisions of the Contract, including General and Supplementary Conditions and other Division 01 Specification Sections, apply to this Section.

1.2 SUMMARY

A. Section Includes:

1. Project information.
2. Work covered by Contract Documents.
3. Phased construction.
4. Work by Owner.
5. Purchase contracts.
6. Owner-furnished products.
7. Contractor-furnished, Owner-installed products.
8. Access to site.
9. Coordination with occupants.
10. Work restrictions.
11. Specification and Drawing conventions.
12. Miscellaneous provisions.

B. Related Requirements:

1. Section 01 5000 "Temporary Facilities and Controls" for limitations and procedures governing temporary use of Owner's facilities.

1.3 PROJECT INFORMATION

A. Project Identification: Roger Williams Park Zoon: Red Panda Exhibit.

1. Project Location: 1000 Elmwood Avenue, Providence, RI 02907.

B. Project summary: Construction of a new 976 Gross Square Foot exhibit to house the Red Panda at the Roger Williams Park Zoo.

C. Owner: Roger Williams Park Zoo: 1000 Elmwood Avenue, Providence, RI 02907.

D. Architect: LDL Studio, Inc. 106 Putnam, Street, Providence, RI 02909.
1. Architect in charge: Gary Lepore, AIA, NCARB, LEED AP.

E. Architect's Consultants: Architect has retained the following design professionals who have prepared designated portions of the Contract Documents:

1. MEP & FA Engineer: HP Engineering Consulting.
2. Structural Engineer: AMR Engineering, Inc.

1.4 ACCESS TO SITE

A. General: Each Contractor shall have full use of Project site for construction operations during construction period. Contractor's use of Project site is limited only by Owner's right to perform work or to retain other contractors on portions of Project.

1.5 COORDINATION WITH OCCUPANTS

A. Owner Limited Occupancy of Completed Areas of Construction: Owner reserves the right to occupy and to place and install equipment in completed portions of the Work, prior to Substantial Completion of the Work, provided such occupancy does not interfere with completion of the Work. Such placement of equipment and limited occupancy shall not constitute acceptance of the total Work.

1. Architect will prepare a Certificate of Substantial Completion for each specific portion of the Work to be occupied prior to Owner acceptance of the completed Work.
2. Obtain a Certificate of Occupancy from authorities having jurisdiction before limited Owner occupancy.
3. Before limited Owner occupancy, mechanical and electrical systems shall be fully operational, and required tests and inspections shall be successfully completed. On occupancy, Owner will operate and maintain mechanical and electrical systems serving occupied portions of Work.
4. On occupancy, Owner will assume responsibility for maintenance and custodial service for occupied portions of Work.

1.6 WORK RESTRICTIONS

A. Work Restrictions, General: Comply with restrictions on construction operations.

1. Comply with limitations on use of public streets and with other requirements of authorities having jurisdiction.

B. On-Site Work Hours: Limit working hours per regulations by authorities having jurisdiction.

C. Existing Utility Interruptions: Do not interrupt utilities serving facilities occupied by Owner or others unless permitted under the following conditions and then only after providing temporary utility services according to requirements indicated:

1. Notify Construction Manager not less than two days in advance of proposed utility interruptions.
2. Obtain Construction Manager's written permission before proceeding with utility interruptions.

D. Noise, Vibration, and Odors: Coordinate operations that may result in high levels of noise and vibration, odors, or other disruption to Owner occupancy with Owner.

1. Notify Owner not less than two days in advance of proposed disruptive operations.
2. Obtain Owner’s written permission before proceeding with disruptive operations.

E. Nonsmoking Building: Smoking is not permitted within the building or within 25 feet of entrances, operable windows, or outdoor-air intakes.

F. Restricted Substances: Use of tobacco products and other controlled substances on Project site is not permitted.

G. Employee Screening: Comply with Owner's requirements for drug and background screening of Contractor personnel working on Project site.

1. Maintain list of approved screened personnel with Owner's representative.

1.7 SPECIFICATION AND DRAWING CONVENTIONS

A. Specification Content: The Specifications use certain conventions for the style of language and the intended meaning of certain terms, words, and phrases when used in particular situations. These conventions are as follows:

1. Imperative mood and streamlined language are generally used in the Specifications. The words "shall," "shall be," or "shall comply with," depending on the context, are implied where a colon (:) is used within a sentence or phrase.
2. Specification requirements are to be performed by Contractor unless specifically stated otherwise.

B. Division 01 General Requirements: Requirements of Sections in Division 01 apply to the Work of all Sections in the Specifications.

C. Drawing Coordination: Requirements for materials and products identified on Drawings are described in detail in the Specifications. One or more of the following are used on Drawings to identify materials and products:

1. Terminology: Materials and products are identified by the typical generic terms used in the individual Specifications Sections.
2. Abbreviations: Materials and products are identified by abbreviations published as part of the U.S. National CAD Standard and scheduled on Drawings.
3. Keynoting: Materials and products are identified by reference keynotes referencing Specification Section numbers found in this Project Manual.

PART 2 - PRODUCTS (Not Used)

PART 3 - EXECUTION (Not Used)

END OF SECTION 01 1000

SECTION 01 2100 - ALLOWANCES

PART 1 - GENERAL

1.1 RELATED DOCUMENTS

A. Drawings and general provisions of the Contract, including General and Supplementary Conditions and other Division 01 Specification Sections, apply to this Section.

1.2 SUMMARY

A. Section includes administrative and procedural requirements governing allowances.

B. Types of allowances include the following:

1. Lump-sum allowances.
2. Unit-cost allowances.
3. Quantity allowances.
4. Contingency allowances.
5. Testing and inspecting allowances.

C. Related Requirements:

1. Section 01 4000 "Quality Requirements" for procedures governing the use of allowances for field testing by an independent testing agency.

1.3 DEFINITIONS

A. Allowance is a quantity of work or dollar amount established in lieu of additional requirements, used to defer selection of actual materials and equipment to a later date when direction will be provided to Contractor. If necessary, additional requirements will be issued by Change Order.

1.4 SELECTION AND PURCHASE

A. At the earliest practical date after award of the Contract, advise Architect of the date when final selection, or purchase and delivery, of each product or system described by an allowance must be completed by the Owner to avoid delaying the Work.

B. At Architect's request, obtain proposals for each allowance for use in making final selections. Include recommendations that are relevant to performing the Work.

C. Purchase products and systems selected by Architect from the designated supplier.

1.5 ACTION SUBMITTALS

A. Submit proposals for purchase of products or systems included in allowances in the form specified for Change Orders.

1.6 INFORMATIONAL SUBMITTALS

A. Submit invoices or delivery slips to show actual quantities of materials delivered to the site for use in fulfillment of each allowance.

B. Submit time sheets and other documentation to show labor time and cost for installation of allowance items that include installation as part of the allowance.

C. Coordinate and process submittals for allowance items in same manner as for other portions of the Work.

1.7 LUMP-SUM ALLOWANCES

A. Allowance shall include cost to Contractor of specific products and materials ordered by Owner or selected by Architect under allowance and shall include [taxes,]freight[,] and delivery to Project site.

B. Unless otherwise indicated, Contractor's costs for receiving and handling at Project site, labor, installation, overhead and profit, and similar costs related to products and materials ordered by Owner or selected by Architect under allowance shall be included as part of the Contract Sum and not part of the allowance.

C. Unused Materials: Return unused materials purchased under an allowance to manufacturer or supplier for credit to Owner, after installation has been completed and accepted.

1. If requested by Architect, retain and prepare unused material for storage by Owner. Deliver unused material to Owner's storage space as directed.

1.8 UNIT-COST ALLOWANCES

A. Allowance shall include cost to Contractor of specific products and materials ordered by Owner or selected by Architect under allowance and shall include [taxes,]freight[,] and delivery to Project site.

B. Unless otherwise indicated, Contractor's costs for receiving and handling at Project site, labor, installation, overhead and profit, and similar costs related to products and materials ordered by Owner or selected by Architect under allowance shall be included

as part of the Contract Sum and not part of the allowance.

C. Unused Materials: Return unused materials purchased under an allowance to manufacturer or supplier for credit to Owner, after installation has been completed and accepted.

1. If requested by Architect, retain and prepare unused material for storage by Owner. Deliver unused material to Owner's storage space as directed.

1.9 QUANTITY ALLOWANCES

A. Allowance shall include cost to Contractor of specific products and materials ordered by Owner or selected by Architect under allowance and shall include taxes, freight and delivery to Project site.

B. Unless otherwise indicated, Contractor's costs for receiving and handling at Project site, labor, installation, overhead and profit, and similar costs related to products and materials ordered by Owner or selected by Architect under allowance shall be included as part of the Contract Sum and not part of the allowance.

C. Unused Materials: Return unused materials purchased under an allowance to manufacturer or supplier for credit to Owner, after installation has been completed and accepted.

1. If requested by Architect, retain and prepare unused material for storage by Owner. Deliver unused material to Owner's storage space as directed.

1.10 CONTINGENCY ALLOWANCES

A. Use the contingency allowance only as directed by Architect for Owner's purposes and only by Change Orders that indicate amounts to be charged to the allowance.

B. Contractor's overhead, profit, and related costs for products and equipment ordered by Owner under the contingency allowance are included in the allowance and are not part of the Contract Sum. These costs include delivery, installation, taxes, insurance, equipment rental, and similar costs.

C. Change Orders authorizing use of funds from the contingency allowance will include Contractor's related costs and reasonable overhead and profit.

D. At Project closeout, credit unused amounts remaining in the contingency allowance to Owner by Change Order.

1.11 TESTING AND INSPECTING ALLOWANCES

A. Testing and inspecting allowances include the cost of engaging testing agencies, actual tests and inspections, and reporting results.

B. The allowance does not include incidental labor required to assist the testing agency or costs for retesting if previous tests and inspections result in failure. The cost for incidental labor to assist the testing agency shall be included in the Contract Sum.

C. Costs of testing and inspection services not required by the Contract Documents are not included in the allowance.

D. At Project closeout, credit unused amounts remaining in the testing and inspecting allowance to Owner by Change Order.

1.12 ADJUSTMENT OF ALLOWANCES

A. Allowance Adjustment: To adjust allowance amounts, prepare a Change Order proposal based on the difference between purchase amount and the allowance, multiplied by final measurement of work-in-place where applicable. If applicable, include reasonable allowances for cutting losses, tolerances, mixing wastes, normal product imperfections, and similar margins.

1. Include installation costs in purchase amount only where indicated as part of the allowance.
2. If requested, prepare explanation and documentation to substantiate distribution of overhead costs and other markups.
3. Submit substantiation of a change in scope of Work, if any, claimed in Change Orders related to unit-cost allowances.
4. Owner reserves the right to establish the quantity of work-in-place by independent quantity survey, measure, or count.

B. Submit claims for increased costs because of a change in scope or nature of the allowance described in the Contract Documents, whether for the purchase order amount or Contractor's handling, labor, installation, overhead, and profit.

1. Do not include Contractor's or subcontractor's indirect expense in the Change Order cost amount unless it is clearly shown that the nature or extent of Work has changed from what could have been foreseen from information in the Contract Documents.
2. No change to Contractor's indirect expense is permitted for selection of higher- or lower-priced materials or systems of the same scope and nature as originally indicated.

PART 2 - PRODUCTS (Not Used)

PART 3 - EXECUTION

3.1 EXAMINATION

A. Examine products covered by an allowance promptly on delivery for damage or defects. Return damaged or defective products to manufacturer for replacement.

3.2 PREPARATION

A. Coordinate materials and their installation for each allowance with related materials and installations to ensure that each allowance item is completely integrated and interfaced with related work.

3.3 SCHEDULE OF ALLOWANCES

A. Allowance #1 – 5% Design Contingency - $65,000
B. Allowance #2 - Helical Pile Install - $70,000
C. Allowance #3 - Furniture - $10,000
D. Allowance #4 – Graphics and Interpretation - $15,000
E. Allowance #5 – Permits and Variances - $6,000
F. Allowance #6 – Testing - $5,000
G. Allowance #7 – Binturong Improvements
$200,000

H. Shift doors, Keeper doors, and the Red Panda transfer tunnel, interior mesh / caging. Preferred vendor is Corners Limited; Contact Jeff Smith.
1. Allowance:

I. Exterior Fence Enclosure, Netting:
1. Allowance:

END OF SECTION 01 2100

SECTION 01 2500 - SUBSTITUTION PROCEDURES

PART 1 - GENERAL

1.1 RELATED DOCUMENTS

A. Drawings and general provisions of the Contract, including General and Supplementary Conditions and other Division 01 Specification Sections, apply to this Section.

1.2 SUMMARY

A. Section includes administrative and procedural requirements for substitutions.

B. Related Requirements:
   1. Section 01 6000 "Product Requirements" for requirements for submitting comparable product submittals for products by listed manufacturers.

1.3 DEFINITIONS

A. Substitutions: Changes in products, materials, equipment, and methods of construction from those required by the Contract Documents and proposed by Contractor.

   1. Substitutions for Cause: Changes proposed by Contractor that are required due to changed Project conditions, such as unavailability of product, regulatory changes, or unavailability of required warranty terms.
   2. Substitutions for Convenience: Changes proposed by Contractor or Owner that are not required in order to meet other Project requirements but may offer advantage to Contractor or Owner.

1.4 ACTION SUBMITTALS

A. Substitution Requests: Submit three copies of each request for consideration. Identify product or fabrication or installation method to be replaced. Include Specification Section number and title and Drawing numbers and titles.

   1. Substitution Request Form: Use facsimile of form provided in Project Manual.
   2. Documentation: Show compliance with requirements for substitutions and the following, as applicable:

      a. Statement indicating why specified product or fabrication or installation method cannot be provided, if applicable.

b. Coordination of information, including a list of changes or revisions needed to other parts of the Work and to construction performed by Owner and separate contractors that will be necessary to accommodate proposed substitution.
c. Detailed comparison of significant qualities of proposed substitutions with those of the Work specified. Include annotated copy of applicable Specification Section. Significant qualities may include attributes, such as performance, weight, size, durability, visual effect, sustainable design characteristics, warranties, and specific features and requirements indicated. Indicate deviations, if any, from the Work specified.
d. Product Data, including drawings and descriptions of products and fabrication and installation procedures.
e. Samples, where applicable or requested.
f. Certificates and qualification data, where applicable or requested.
g. List of similar installations for completed projects, with project names and addresses as well as names and addresses of architects and owners.
h. Material test reports from a qualified testing agency, indicating and interpreting test results for compliance with requirements indicated.
i. Research reports evidencing compliance with building code in effect for Project, from ICC-ES.
j. Detailed comparison of Contractor's construction schedule using proposed substitutions with products specified for the Work, including effect on the overall Contract Time. If specified product or method of construction cannot be provided within the Contract Time, include letter from manufacturer, on manufacturer's letterhead, stating date of receipt of purchase order, lack of availability, or delays in delivery.
k. Cost information, including a proposal of change, if any, in the Contract Sum.
l. Contractor's certification that proposed substitution complies with requirements in the Contract Documents, except as indicated in substitution request, is compatible with related materials and is appropriate for applications indicated.
m. Contractor's waiver of rights to additional payment or time that may subsequently become necessary because of failure of proposed substitution to produce indicated results.

3. Architect's Action: If necessary, Architect will request additional information or documentation for evaluation within seven days of receipt of a request for substitution. Architect will notify Contractor of acceptance or rejection of proposed substitution within 15 business days of receipt of request, or seven business days of receipt of additional information or documentation, whichever is later.

    a. Forms of Acceptance: Change Order, Construction Change Directive, or Architect's Supplemental Instructions for minor changes in the Work.
    b. Use product specified if Architect does not issue a decision on use of a proposed substitution within time allocated.

1.5 QUALITY ASSURANCE

A. Compatibility of Substitutions: Investigate and document compatibility of proposed substitution with related products and materials. Engage a qualified testing agency to perform compatibility tests recommended by manufacturers.

1.6 PROCEDURES

A. Coordination: Revise or adjust affected work as necessary to integrate work of the approved substitutions.

1.7 SUBSTITUTIONS

A. Substitutions for Cause: Submit requests for substitution immediately on discovery of need for change, but not later than 15 business days prior to time required for preparation and review of related submittals.

1. Conditions: Architect will consider Contractor's request for substitution when the following conditions are satisfied. If the following conditions are not satisfied, Architect will return requests without action, except to record noncompliance with these requirements:

a. Requested substitution is consistent with the Contract Documents and will produce indicated results.
b. Substitution request is fully documented and properly submitted.
c. Requested substitution will not adversely affect Contractor's construction schedule.
d. Requested substitution has received necessary approvals of authorities having jurisdiction.
e. Requested substitution is compatible with other portions of the Work.
f. Requested substitution has been coordinated with other portions of the Work.
g. Requested substitution provides specified warranty.
h. If requested substitution involves more than one contractor, requested substitution has been coordinated with other portions of the Work, is uniform and consistent, is compatible with other products, and is acceptable to all contractors involved.

B. Substitutions for Convenience: Architect will consider requests for substitution if received within 60 days after the Notice of Award**.** Requests received after that time may be considered or rejected at discretion of Architect.

1. Conditions: Architect will consider Contractor's request for substitution when the following conditions are satisfied. If the following conditions are not satisfied, Architect will return requests without action, except to record noncompliance with these requirements:

a. Requested substitution offers Owner a substantial advantage in cost, time, energy conservation, or other considerations, after deducting additional responsibilities Owner must assume. Owner's additional responsibilities may include compensation to Architect for redesign and evaluation services, increased cost of other construction by Owner, and similar considerations.
b. Requested substitution does not require extensive revisions to the Contract Documents.
c. Requested substitution is consistent with the Contract Documents and will produce indicated results.
d. Substitution request is fully documented and properly submitted.
e. Requested substitution will not adversely affect Contractor's construction schedule.
f. Requested substitution has received necessary approvals of authorities having jurisdiction.
g. Requested substitution is compatible with other portions of the Work.
h. Requested substitution has been coordinated with other portions of the Work.
i. Requested substitution provides specified warranty.
j. If requested substitution involves more than one contractor, requested substitution has been coordinated with other portions of the Work, is uniform and consistent, is compatible with other products, and is acceptable to all contractors involved.

PART 2 - PRODUCTS (Not Used)

PART 3 - EXECUTION (Not Used)

END OF SECTION 01 2500

SECTION 01 2600 - CONTRACT MODIFICATION PROCEDURES

PART 1 - GENERAL

1.1 RELATED DOCUMENTS

A. Drawings and general provisions of the Contract, including General and Supplementary Conditions and other Division 01 Specification Sections, apply to this Section.

1.2 SUMMARY

A. Section includes administrative and procedural requirements for handling and processing Contract modifications.

B. Related Requirements:

1. Section 01 2500 "Substitution Procedures" for administrative procedures for handling requests for substitutions made after the Contract award.

1.3 MINOR CHANGES IN THE WORK

A. Architect will issue[through Construction Manager] supplemental instructions authorizing minor changes in the Work, not involving adjustment to the Contract Sum or the Contract Time, on form included in Project Manual.

1.4 PROPOSAL REQUESTS

A. Owner-Initiated Proposal Requests: Architect will issue a detailed description of proposed changes in the Work that may require adjustment to the Contract Sum or the Contract Time. If necessary, the description will include supplemental or revised Drawings and Specifications.

1. Work Change Proposal Requests issued by Architect are not instructions either to stop work in progress or to execute the proposed change.
2. Within time specified in Proposal Request or 20 days, when not otherwise specified, after receipt of Proposal Request, submit a quotation estimating cost adjustments to the Contract Sum and the Contract Time necessary to execute the change.

a. Include a list of quantities of products required or eliminated and unit costs, with total amount of purchases and credits to be made. If requested, furnish survey data to substantiate quantities.

b. Indicate applicable taxes, delivery charges, equipment rental, and amounts of trade discounts.
c. Include costs of labor and supervision directly attributable to the change.
d. Include an updated Contractor's construction schedule that indicates the effect of the change, including, but not limited to, changes in activity duration, start and finish times, and activity relationship. Use available total float before requesting an extension of the Contract Time.
e. Quotation Form: Use forms acceptable to Architect.

B. Contractor-Initiated Proposals: If latent or changed conditions require modifications to the Contract, Contractor may initiate a claim by submitting a request for a change to Construction Manager.

1. Include a statement outlining reasons for the change and the effect of the change on the Work. Provide a complete description of the proposed change. Indicate the effect of the proposed change on the Contract Sum and the Contract Time.
2. Include a list of quantities of products required or eliminated and unit costs, with total amount of purchases and credits to be made. If requested, furnish survey data to substantiate quantities.
3. Indicate applicable taxes, delivery charges, equipment rental, and amounts of trade discounts.
4. Include costs of labor and supervision directly attributable to the change.
5. Include an updated Contractor's construction schedule that indicates the effect of the change, including, but not limited to, changes in activity duration, start and finish times, and activity relationship. Use available total float before requesting an extension of the Contract Time.
6. Comply with requirements in Section 01 2500 "Substitution Procedures" if the proposed change requires substitution of one product or system for product or system specified.
7. Proposal Request Form: Use form provided by Owner. Sample copy is included in Project Manual or, form acceptable to Architect.

1.5 ADMINISTRATIVE CHANGE ORDERS

A. Allowance Adjustment: See Section 01 2100 "Allowances" for administrative procedures for preparation of Change Order Proposal for adjusting the Contract Sum to reflect actual costs of allowances.

B. Unit-Price Adjustment: See Section 01 2200 "Unit Prices" for administrative procedures for preparation of Change Order Proposal for adjusting the Contract Sum to reflect measured scope of unit-price work.

1.6 CHANGE ORDER PROCEDURES

A. On Owner's approval of a Work Change Proposal Request, Construction Manager will issue a Change Order for signatures of Owner and Contractor on form included in Project Manual.

1.7 CONSTRUCTION CHANGE DIRECTIVE

A. Construction Change Directive: Architect may issue a Construction Change Directive on AIA Document G714 . Construction Change Directive instructs Contractor to proceed with a change in the Work, for subsequent inclusion in a Change Order.

1. Construction Change Directive contains a complete description of change in the Work. It also designates method to be followed to determine change in the Contract Sum or the Contract Time.

B. Documentation: Maintain detailed records on a time and material basis of work required by the Construction Change Directive.

1. After completion of change, submit an itemized account and supporting data necessary to substantiate cost and time adjustments to the Contract.

1.8 WORK CHANGE DIRECTIVE

A. Work Change Directive: Construction Manager may issue a Work Change Directive on EJCDC Document C-940 form included in Project Manual. Work Change Directive instructs Contractor to proceed with a change in the Work, for subsequent inclusion in a Change Order.

1. Work Change Directive contains a complete description of change in the Work. It also designates method to be followed to determine change in the Contract Sum or the Contract Time.

B. Documentation: Maintain detailed records on a time and material basis of work required by the Work Change Directive.

1. After completion of change, submit an itemized account and supporting data necessary to substantiate cost and time adjustments to the Contract.

PART 2 - PRODUCTS (Not Used)

PART 3 - EXECUTION (Not Used)

END OF SECTION 01 2600

SECTION 01 3100 - PROJECT MANAGEMENT AND COORDINATION

PART 1 - GENERAL

1.1 RELATED DOCUMENTS

A. Drawings and general provisions of the Contract, including General and Supplementary Conditions and other Division 01 Specification Sections, apply to this Section.

1.2 SUMMARY

A. Section includes administrative provisions for coordinating construction operations on Project including, but not limited to, the following:

1. General coordination procedures.
2. Coordination drawings.
3. RFIs.
4. Digital project management procedures.
5. Project meetings.

B. Each contractor shall participate in coordination requirements. Certain areas of responsibility are assigned to a specific contractor.

C. Related Requirements:

1. Section 01 3200 "Construction Progress Documentation" for preparing and submitting Contractor's construction schedule.
2. Section 01 7300 "Execution" for procedures for coordinating general installation and field-engineering services, including establishment of benchmarks and control points.
3. Section 01 7700 "Closeout Procedures" for coordinating closeout of the Contract.

1.3 DEFINITIONS

A. BIM: Building Information Modeling.

B. RFI: Request for Information. Request from Owner, Architect, or Contractor seeking information required by or clarifications of the Contract Documents.

1.4 INFORMATIONAL SUBMITTALS

A. Subcontract List: Prepare a written summary identifying individuals or firms proposed for each portion of the Work, including those who are to furnish products or equipment fabricated to a special design. Include the following information in tabular form:

1. Name, address, telephone number, and email address of entity performing subcontract or supplying products.
2. Number and title of related Specification Section(s) covered by subcontract.
3. Drawing number and detail references, as appropriate, covered by subcontract.

B. Key Personnel Names: Within 15 business days of starting construction operations, submit a list of key personnel assignments, including superintendent and other personnel in attendance at Project site. Identify individuals and their duties and responsibilities; list addresses and cellular telephone numbers and e-mail addresses. Provide names, addresses, and telephone numbers of individuals assigned as alternates in the absence of individuals assigned to Project.

1. Post copies of list in project meeting room, in temporary field office, in web-based Project software directory, and in prominent location in each built facility. Keep list current at all times.

1.5 GENERAL COORDINATION PROCEDURES

A. Coordination: Coordinate construction operations included in different Sections of the Specifications to ensure efficient and orderly installation of each part of the Work. Coordinate construction operations included in different Sections that depend on each other for proper installation, connection, and operation.

1. Schedule construction operations in sequence required to obtain the best results where installation of one part of the Work depends on installation of other components, before or after its own installation.
2. Coordinate installation of different components to ensure maximum performance and accessibility for required maintenance, service, and repair.
3. Make adequate provisions to accommodate items scheduled for later installation.

B. Coordination: Each contractor shall [cooperate with Project coordinator who shall coordinate its construction operations with those of other contractors and entities to ensure efficient and orderly installation of each part of the Work. Each contractor shall coordinate its own operations with operations included in different Sections that depend on each other for proper installation, connection, and operation.

1. Schedule construction operations in sequence required to obtain the best results where installation of one part of the Work depends on installation of other components, before or after its own installation.
2. Coordinate installation of different components with other contractors to ensure maximum performance and accessibility for required maintenance, service, and repair.
3. Make adequate provisions to accommodate items scheduled for later installation.

C. Prepare memoranda for distribution to each party involved, outlining special procedures required for coordination. Include such items as required notices, reports, and list of attendees at meetings.

1. Prepare similar memoranda for Owner and separate contractors if coordination of their Work is required.

D. Administrative Procedures: Coordinate scheduling and timing of required administrative procedures with other construction activities to avoid conflicts and to ensure orderly progress of the Work. Such administrative activities include, but are not limited to, the following:

1. Preparation of Contractor's construction schedule.
2. Preparation of the schedule of values.
3. Installation and removal of temporary facilities and controls.
4. Delivery and processing of submittals.
5. Progress meetings.
6. Preinstallation conferences.
7. Project closeout activities.
8. Startup and adjustment of systems.

1.6 COORDINATION DRAWINGS

A. Coordination Drawings, General: Prepare coordination drawings according to requirements in individual Sections, and additionally where installation is not completely indicated on Shop Drawings, where limited space availability necessitates coordination, or if coordination is required to facilitate integration of products and materials fabricated or installed by more than one entity.

1. Content: Project-specific information, drawn accurately to a scale large enough to indicate and resolve conflicts. Do not base coordination drawings on standard printed data. Include the following information, as applicable:

a. Use applicable Drawings as a basis for preparation of coordination drawings. Prepare sections, elevations, and details as needed to describe relationship of various systems and components.
b. Coordinate the addition of trade-specific information to coordination drawings [by multiple contractors in a sequence that best provides for coordination of the information and resolution of conflicts between installed components before submitting for review.
c. Indicate functional and spatial relationships of components of architectural, structural, civil, mechanical, and electrical systems.
d. Indicate space requirements for routine maintenance and for anticipated replacement of components during the life of the installation.
e. Show location and size of access doors required for access to concealed dampers, valves, and other controls.
f. Indicate required installation sequences.

g. Indicate dimensions shown on Drawings. Specifically note dimensions that appear to be in conflict with submitted equipment and minimum clearance requirements. Provide alternative sketches to Architect indicating proposed resolution of such conflicts. Minor dimension changes and difficult installations will not be considered changes to the Contract.

B. Coordination Drawing Organization: Organize coordination drawings as follows:

1. Floor Plans and Reflected Ceiling Plans: Show architectural and structural elements, and mechanical, plumbing, fire-protection, fire-alarm, and electrical Work. Show locations of visible ceiling-mounted devices relative to acoustical ceiling grid. Supplement plan drawings with section drawings where required to adequately represent the Work.
2. Plenum Space: Indicate subframing for support of ceiling, and wall systems, mechanical and electrical equipment, and related Work. Locate components within plenums to accommodate layout of light fixtures and other components indicated on Drawings. Indicate areas of conflict between light fixtures and other components.
3. Mechanical Rooms: Provide coordination drawings for mechanical rooms showing plans and elevations of mechanical, plumbing, fire-protection, fire-alarm, and electrical equipment.
4. Structural Penetrations: Indicate penetrations and openings required for all disciplines.
5. Slab Edge and Embedded Items: Indicate slab edge locations and sizes and locations of embedded items for metal fabrications, sleeves, anchor bolts, bearing plates, angles, door floor closers, slab depressions for floor finishes, curbs and housekeeping pads, and similar items.
6. Mechanical and Plumbing Work: Show the following:

    a. Sizes and bottom elevations of ductwork, piping, and conduit runs, including insulation, bracing, flanges, and support systems.
    b. Dimensions of major components, such as dampers, valves, diffusers, access doors, cleanouts and electrical distribution equipment.
    c. Fire-rated enclosures around ductwork.

7. Electrical Work: Show the following:

    a. Runs of vertical and horizontal conduit 1-1/4 inches in diameter and larger.
    b. Light fixture, exit light, emergency battery pack, smoke detector, and other fire-alarm locations.
    c. Panel board, switch board, switchgear, transformer, busway, generator, and motor-control center locations.
    d. Location of pull boxes and junction boxes, dimensioned from column center lines.

8. Fire-Protection System: Show the following:

    a. Locations of standpipes, mains piping, branch lines, pipe drops, and sprinkler heads.

9. Review: Architect will review coordination drawings to confirm that in general the Work is being coordinated, but not for the details of the coordination, which are Contractor's responsibility. If Architect determines that coordination drawings are not being prepared in sufficient scope or detail, or are otherwise deficient, Architect will so inform Contractor, who shall make suitable modifications and resubmit.
10. Coordination Drawing Prints: Prepare coordination drawing prints according to requirements in Section 01 3300 "Submittal Procedures."

C. Coordination Digital Data Files: Prepare coordination digital data files according to the following requirements:

1. File Preparation Format: Same digital data software program, version, and operating system as original Drawings.
2. File Preparation Format: AutoCAD / RVT current operating in Microsoft Windows operating system.
3. File Submittal Format: Submit or post coordination drawing files using PDF format.
4. BIM File Incorporation: Develop and incorporate coordination drawing files into BIM established for Project.

    a. Perform three-dimensional component conflict analysis as part of preparation of coordination drawings. Resolve component conflicts prior to submittal. Indicate where conflict resolution requires modification of design requirements by Architect.

5. Architect will furnish Contractor one set of digital data files of Drawings for use in preparing coordination digital data files.

    a. Architect makes no representations as to the accuracy or completeness of digital data files as they relate to Drawings.
    ~~b.~~ Digital Data Software Program: Drawings are available in Revit.
    c. Contractor shall execute a data licensing agreement in the form of Agreement form acceptable to Owner and Architect.

1.7 REQUEST FOR INFORMATION (RFI)

A. General: Immediately on discovery of the need for additional information, clarification, or interpretation of the Contract Documents, Contractor shall prepare and submit an RFI in the form specified.

1. Architect will return without response those RFIs submitted to Architect by other entities controlled by Contractor.
2. Coordinate and submit RFIs in a prompt manner so as to avoid delays in Contractor's work or work of subcontractors.

B. Content of the RFI: Include a detailed, legible description of item needing information or interpretation and the following:

1. Project name.
2. Project number.
3. Date.
4. Name of Contractor.
5. Name of Architect.
6. RFI number, numbered sequentially.
7. RFI subject.
8. Specification Section number and title and related paragraphs, as appropriate.
9. Drawing number and detail references, as appropriate.
10. Field dimensions and conditions, as appropriate.
11. Contractor's suggested resolution. If Contractor's suggested resolution impacts the Contract Time or the Contract Sum, Contractor shall state impact in the RFI.
12. Contractor's signature.
13. Attachments: Include sketches, descriptions, measurements, photos, Product Data, Shop Drawings, coordination drawings, and other information necessary to fully describe items needing interpretation.

    a. Include dimensions, thicknesses, structural grid references, and details of affected materials, assemblies, and attachments on attached sketches.

C. RFI Forms: [AIA Document G716] [Form bound in Project Manual] [Software-generated form with substantially the same content as indicated above, acceptable to Architect].

1. Attachments shall be electronic files in PDF format.

D. Architect's Action: Architect will review each RFI, determine action required, and respond. Allow 5 business days for Architect's response for each RFI. RFIs received by Architect after 1:00 p.m. will be considered as received the following working day.

1. The following Contractor-generated RFIs will be returned without action:

    a. Requests for approval of submittals.
    b. Requests for approval of substitutions.
    c. Requests for approval of Contractor's means and methods.
    d. Requests for coordination information already indicated in the Contract Documents.
    e. Requests for adjustments in the Contract Time or the Contract Sum.
    f. Requests for interpretation of Architect's actions on submittals.
    g. Incomplete RFIs or inaccurately prepared RFIs.

2. Architect's action may include a request for additional information, in which case Architect's time for response will date from time of receipt by Architect of additional information.
3. Architect's action on RFIs that may result in a change to the Contract Time or the Contract Sum may be eligible for Contractor to submit Change Proposal according to Section 01 2600 "Contract Modification Procedures."

a. If Contractor believes the RFI response warrants change in the Contract Time or the Contract Sum, notify Architect in writing within 5 business days of receipt of the RFI response.

E. RFI Log: Prepare, maintain, and submit a tabular log of RFIs organized by the RFI number. Submit log weekly. Use software log that is part of web-based Project software.

1. Project name.
2. Name and address of Contractor.
3. Name and address of Architect.
4. RFI number including RFIs that were returned without action or withdrawn.
5. RFI description.
6. Date the RFI was submitted.
7. Date Architect's response was received.
8. Identification of related Minor Change in the Work, Construction Change Directive, and Proposal Request, as appropriate.
9. Identification of related Field Order, Work Change Directive, and Proposal Request, as appropriate.

F. On receipt of Architect's action, update the RFI log and immediately distribute the RFI response to affected parties. Review response and notify Architect within seven business days if Contractor disagrees with response.

1.8 DIGITAL PROJECT MANAGEMENT PROCEDURES

A. Use of Architect's Digital Data Files: Digital data files of Architect's BIM model will be provided by Architect for Contractor's use during construction.

1. Digital data files may be used by Contractor in preparing coordination drawings, Shop Drawings, and Project record Drawings.
2. Architect makes no representations as to the accuracy or completeness of digital data files as they relate to Contract Drawings.
3. Digital Drawing Software Program: Contract Drawings are available in AutoCAD / Revit export.
4. Contractor shall execute a data licensing agreement in the form of Agreement form acceptable to Owner and Architect.

a. Subcontractors, and other parties granted access by Contractor to Architect's digital data files shall execute a data licensing agreement in the form of Agreement acceptable to Owner and Architect.

B. Web-Based Project Software: Use Architect's web-based Project software site for purposes of hosting and managing Project communication and documentation until Final Completion.

1. Web-based Project software site includes, at a minimum, the following features:

a. Compilation of Project data, including Contractor, subcontractors, Architect, architect's consultants, Owner, and other entities involved in Project. Include names of individuals and contact information.
b. Access control for each entity for each workflow process, to determine entity's digital rights to create, modify, view, and print documents.
c. Document workflow planning, allowing customization of workflow between project entities.
d. Creation, logging, tracking, and notification for Project communications required in other Specification Sections, including, but not limited to, RFIs, submittals, Minor Changes in the Work, Construction Change Directives, and Change Orders.
e. Track status of each Project communication in real time, and log time and date when responses are provided.
f. Procedures for handling PDFs or similar file formats, allowing markups by each entity. Provide security features to lock markups against changes once submitted.
g. Processing and tracking of payment applications.
h. Processing and tracking of contract modifications.
i. Creating and distributing meeting minutes.
j. Document management for Drawings, Specifications, and coordination drawings, including revision control.
k. Management of construction progress photographs.
l. Mobile device compatibility, including smartphones and tablets.

2. Provide up to seven web-based Project software user licenses for use of Owner, Owner's Commissioning Authority, Architect, and Architect's consultants. Provide eight hours of software training at Architect's office for web-based Project software users.
3. At completion of Project, provide digital archive in format that is readable by common desktop software applications in format acceptable to Architect. Provide data in locked format to prevent further changes.

C. PDF Document Preparation: Where PDFs are required to be submitted to Architect, prepare as follows:

1. Assemble complete submittal package into a single indexed file incorporating submittal requirements of a single Specification Section and transmittal form with links enabling navigation to each item.
2. Name file with submittal number or other unique identifier, including revision identifier.
3. Certifications: Where digitally submitted certificates and certifications are required, provide a digital signature with digital certificate on where indicated.

1.9 PROJECT MEETINGS

A. General: Schedule and conduct meetings and conferences at Project site unless otherwise indicated.

1. Attendees: Inform participants and others involved, and individuals whose presence is required, of date and time of each meeting. Notify Owner and Architect of scheduled meeting dates and times a minimum of 10 working days prior to meeting.

2. Agenda: Prepare the meeting agenda. Distribute the agenda to all invited attendees.
3. Minutes: Entity responsible for conducting meeting will record significant discussions and agreements achieved. Distribute the meeting minutes to everyone concerned, including Owner and Architect, within three days of the meeting.

B. Preconstruction Conference: Schedule and conduct a preconstruction conference before starting construction, at a time convenient to Owner and Architect, but no later than 15 days after execution of the Agreement.

1. Attendees: Authorized representatives of Owner, Owner's Commissioning Authority, Architect, and their consultants; Contractor and its superintendent; major subcontractors; suppliers; and other concerned parties shall attend the conference. Participants at the conference shall be familiar with Project and authorized to conclude matters relating to the Work.
2. Agenda: Discuss items of significance that could affect progress, including the following:

    a. Responsibilities and personnel assignments.
    b. Tentative construction schedule.
    c. Phasing.
    d. Critical work sequencing and long lead items.
    e. Designation of key personnel and their duties.
    f. Lines of communications.
    g. Use of web-based Project software.
    h. Procedures for processing field decisions and Change Orders.
    i. Procedures for RFIs.
    j. Procedures for testing and inspecting.
    k. Procedures for processing Applications for Payment.
    l. Distribution of the Contract Documents.
    m. Submittal procedures.
    n. Sustainable design requirements.
    o. Preparation of Record Documents.
    p. Use of the premises.
    q. Work restrictions.
    r. Working hours.
    s. Owner's occupancy requirements.
    t. Responsibility for temporary facilities and controls.
    u. Procedures for moisture and mold control.
    v. Procedures for disruptions and shutdowns.
    w. Construction waste management and recycling.
    x. Parking availability.
    y. Office, work, and storage areas.
    z. Equipment deliveries and priorities.
    aa. First aid.
    bb. Security.
    cc. Progress cleaning.

3. Minutes: Entity responsible for conducting meeting will record and distribute meeting minutes.

C. Preinstallation Conferences: Conduct a preinstallation conference at Project site before each construction activity when required by other sections and when required for coordination with other construction.

1. Attendees: Installer and representatives of manufacturers and fabricators involved in or affected by the installation and its coordination or integration with other materials and installations that have preceded or will follow, shall attend the meeting. Advise Architect, and Owner's Commissioning Authority ǂ of scheduled meeting dates.
2. Agenda: Review progress of other construction activities and preparations for the particular activity under consideration, including requirements for the following:

    a. Contract Documents.
    b. Options.
    c. Related RFIs.
    d. Related Change Orders.
    e. Purchases.
    f. Deliveries.
    g. Submittals.
    h. Sustainable design requirements.
    i. Review of mockups.
    j. Possible conflicts.
    k. Compatibility requirements.
    l. Time schedules.
    m. Weather limitations.
    n. Manufacturer's written instructions.
    o. Warranty requirements.
    p. Compatibility of materials.
    q. Acceptability of substrates.
    r. Temporary facilities and controls.
    s. Space and access limitations.
    t. Regulations of authorities having jurisdiction.
    u. Testing and inspecting requirements.
    v. Installation procedures.
    w. Coordination with other work.
    x. Required performance results.
    y. Protection of adjacent work.
    z. Protection of construction and personnel.

3. Record significant conference discussions, agreements, and disagreements, including required corrective measures and actions.
4. Reporting: Distribute minutes of the meeting to each party present and to other parties requiring information.
5. Do not proceed with installation if the conference cannot be successfully concluded. Initiate whatever actions are necessary to resolve impediments to performance of the Work and reconvene the conference at earliest feasible date.

D. Project Closeout Conference: Schedule and conduct a project closeout conference, at a time convenient to Owner and Architect, but no later than 90 days prior to the scheduled date of Substantial Completion.

1. Conduct the conference to review requirements and responsibilities related to Project closeout.
2. Attendees: Authorized representatives of Owner, Owner's Commissioning Authority, Architect, and their consultants; Contractor and its superintendent; major subcontractors; suppliers; and other concerned parties shall attend the meeting. Participants at the meeting shall be familiar with Project and authorized to conclude matters relating to the Work.
3. Agenda: Discuss items of significance that could affect or delay Project closeout, including the following:

    a. Preparation of Record Documents.
    b. Procedures required prior to inspection for Substantial Completion and for final inspection for acceptance.
    c. Procedures for completing and archiving web-based Project software site data files.
    d. Submittal of written warranties.
    e. Requirements for completing sustainable design documentation.
    f. Requirements for preparing operations and maintenance data.
    g. Requirements for delivery of material samples, attic stock, and spare parts.
    h. Requirements for demonstration and training.
    i. Preparation of Contractor's punch list.
    j. Procedures for processing Applications for Payment at Substantial Completion and for final payment.
    k. Submittal procedures.
    l. Coordination of separate contracts.
    m. Owner's partial occupancy requirements.
    n. Installation of Owner's furniture, fixtures, and equipment.
    o. Responsibility for removing temporary facilities and controls.

4. Minutes: Entity conducting meeting will record and distribute meeting minutes.

E. Progress Meetings: Conduct progress meetings at biweekly intervals.

1. Coordinate dates of meetings with preparation of payment requests.
2. Attendees: In addition to representatives of Owner, Owner's Commissioning Authority, and Architect, each contractor, subcontractor, supplier, and other entity concerned with current progress or involved in planning, coordination, or performance of future activities shall be represented at these meetings. All participants at the meeting shall be familiar with Project and authorized to conclude matters relating to the Work.
3. Agenda: Review and correct or approve minutes of previous progress meeting. Review other items of significance that could affect progress. Include topics for discussion as appropriate to status of Project.

a. Contractor's Construction Schedule: Review progress since the last meeting. Determine whether each activity is on time, ahead of schedule, or behind schedule, in relation to Contractor's construction schedule. Determine how construction behind schedule will be expedited; secure commitments from parties involved to do so. Discuss whether schedule revisions are required to ensure that current and subsequent activities will be completed within the Contract Time.

1) Review schedule for next period.

b. Review present and future needs of each entity present, including the following:

1) Interface requirements.
2) Sequence of operations.
3) Resolution of BIM component conflicts.
4) Status of submittals.
5) Status of sustainable design documentation.
6) Deliveries.
7) Off-site fabrication.
8) Access.
9) Site use.
10) Temporary facilities and controls.
11) Progress cleaning.
12) Quality and work standards.
13) Status of correction of deficient items.
14) Field observations.
15) Status of RFIs.
16) Status of Proposal Requests.
17) Pending changes.
18) Status of Change Orders.
19) Pending claims and disputes.
20) Documentation of information for payment requests.

4. Minutes: Entity responsible for conducting the meeting will record and distribute the meeting minutes to each party present and to parties requiring information.

a. Schedule Updating: Revise Contractor's construction schedule after each progress meeting where revisions to the schedule have been made or recognized. Issue revised schedule concurrently with the report of each meeting.

F. Coordination Meetings: Conduct Project coordination meetings at biweekly intervals. Project coordination meetings are in addition to specific meetings held for other purposes, such as progress meetings and preinstallation conferences.

1. Attendees: In addition to representatives of Owner, Owner's Commissioning Authority, and Architect, each contractor, subcontractor, supplier, and other entity concerned with current progress or involved in planning, coordination, or performance of future activities shall be represented at these meetings. All participants at the meetings shall be familiar with Project and authorized to conclude matters relating to the Work.

2. Agenda: Review and correct or approve minutes of the previous coordination meeting. Review other items of significance that could affect progress. Include topics for discussion as appropriate to status of Project.

    a. Combined Contractor's Construction Schedule: Review progress since the last coordination meeting. Determine whether each contract is on time, ahead of schedule, or behind schedule, in relation to combined Contractor's construction schedule. Determine how construction behind schedule will be expedited; secure commitments from parties involved to do so. Discuss whether schedule revisions are required to ensure that current and subsequent activities will be completed within the Contract Time.
    b. Schedule Updating: Revise combined Contractor's construction schedule after each coordination meeting where revisions to the schedule have been made or recognized. Issue revised schedule concurrently with report of each meeting.
    c. Review present and future needs of each contractor present, including the following:

        1) Interface requirements.
        2) Sequence of operations.
        3) Resolution of BIM component conflicts.
        4) Status of submittals.
        5) Deliveries.
        6) Off-site fabrication.
        7) Access.
        8) Site use.
        9) Temporary facilities and controls.
        10) Work hours.
        11) Hazards and risks.
        12) Progress cleaning.
        13) Quality and work standards.
        14) Status of RFIs.
        15) Proposal Requests.
        16) Change Orders.
        17) Pending changes.

3. Reporting: Record meeting results and distribute copies to everyone in attendance and to others affected by decisions or actions resulting from each meeting.

PART 2 - PRODUCTS (Not Used)

PART 3 - EXECUTION (Not Used)

END OF SECTION 01 3100

SECTION 01 3200 - CONSTRUCTION PROGRESS DOCUMENTATION

PART 1 - GENERAL

1.1 RELATED DOCUMENTS

A. Drawings and general provisions of the Contract, including General and Supplementary Conditions and other Division 01 Specification Sections, apply to this Section.

1.2 SUMMARY

A. Section includes administrative and procedural requirements for documenting the progress of construction during performance of the Work, including the following:

1. Startup construction schedule.
2. Contractor's Construction Schedule.
3. Construction schedule updating reports.
4. Daily construction reports.
5. Material location reports.
6. Site condition reports.
7. Unusual event reports.

1.3 DEFINITIONS

A. Activity: A discrete part of a project that can be identified for planning, scheduling, monitoring, and controlling the construction Project. Activities included in a construction schedule consume time and resources.

1. Critical Activity: An activity on the critical path that must start and finish on the planned early start and finish times.
2. Predecessor Activity: An activity that precedes another activity in the network.
3. Successor Activity: An activity that follows another activity in the network.

B. Cost Loading: The allocation of the schedule of values for completing an activity as scheduled. The sum of costs for all activities must equal the total Contract Sum.

C. CPM: Critical path method, which is a method of planning and scheduling a construction project where activities are arranged based on activity relationships. Network calculations determine when activities can be performed and the critical path of Project.

D. Critical Path: The longest connected chain of interdependent activities through the network schedule that establishes the minimum overall Project duration and contains no float.

E. Event: The starting or ending point of an activity.

F. Float: The measure of leeway in starting and completing an activity.

1. Float time ~~belongs~~ belongs to Owner.
2. Free float is the amount of time an activity can be delayed without adversely affecting the early start of the successor activity.
3. Total float is the measure of leeway in starting or completing an activity without adversely affecting the planned Project completion date.

G. Resource Loading: The allocation of manpower and equipment necessary for completing an activity as scheduled.

1.4 INFORMATIONAL SUBMITTALS

A. Format for Submittals: Submit required submittals in the following format:

1. Working electronic copy of schedule file, where indicated.
2. PDF file.

B. Startup construction schedule.

1. Submittal of cost-loaded, startup construction schedule will not constitute approval of schedule of values for cost-loaded activities.

C. Startup Network Diagram: Of size required to display entire network for entire construction period. Show logic ties for activities.

D. Contractor's Construction Schedule: Initial schedule, of size required to display entire schedule for entire construction period.

1. Submit a working digital copy of schedule, using software indicated, and labeled to comply with requirements for submittals.

E. CPM Reports: Concurrent with CPM schedule, submit each of the following reports. Format for each activity in reports shall contain activity number, activity description, cost and resource loading, original duration, remaining duration, early start date, early finish date, late start date, late finish date, and total float in calendar days.

1. Activity Report: List of activities sorted by activity number and then early start date, or actual start date if known.
2. Logic Report: List of preceding and succeeding activities for each activity, sorted in ascending order by activity number and then by early start date, or actual start date if known.
3. Total Float Report: List of activities sorted in ascending order of total float.
4. Earnings Report: Compilation of Contractor's total earnings from commencement of the Work-until most recent Application for Payment.

F. Construction Schedule Updating Reports: Submit with Applications for Payment.

G. Daily Construction Reports: Submit at monthly intervals.

H. Material Location Reports: Submit at monthly intervals.

I. Site Condition Reports: Submit at time of discovery of differing conditions.

J. Unusual Event Reports: Submit at time of unusual event.

K. Qualification Data: For scheduling consultant.

1.5 QUALITY ASSURANCE

A. Scheduling Consultant Qualifications: An experienced specialist in CPM scheduling and reporting, with capability of producing CPM reports and diagrams within 24 hours of Architect's request.

B. Prescheduling Conference: Conduct conference at Project site to comply with requirements in Section 01 3100 "Project Management and Coordination." Review methods and procedures related to the preliminary construction schedule and Contractor's Construction Schedule, including, but not limited to, the following:

1. Review software limitations and content and format for reports.
2. Verify availability of qualified personnel needed to develop and update schedule.
3. Discuss constraints, including phasing, work stages, area separations, interim milestones and partial Owner occupancy.
4. Review delivery dates for Owner-furnished products.
5. Review schedule for work of Owner's separate contracts.
6. Review submittal requirements and procedures.
7. Review time required for review of submittals and resubmittals.
8. Review requirements for tests and inspections by independent testing and inspecting agencies.
9. Review time required for Project closeout and Owner startup procedures , including commissioning activities.
10. Review and finalize list of construction activities to be included in schedule.
11. Review procedures for updating schedule.

1.6 COORDINATION

A. Coordinate Contractor's Construction Schedule with the schedule of values,list of subcontracts, submittal schedule, progress reports, payment requests, and other required schedules and reports.

1. Secure time commitments for performing critical elements of the Work from entities involved.

2. Coordinate each construction activity in the network with other activities and schedule them in proper sequence.

1.7 CONTRACTOR'S CONSTRUCTION SCHEDULE, GENERAL

A. Computer Scheduling Software: Prepare schedules using current version of a program that has been developed specifically to manage construction schedules.

B. Scheduling Consultant: Engage a consultant to provide planning, evaluation, and reporting using CPM scheduling.

1. In-House Option: Owner may waive requirement to retain a consultant if Contractor employs skilled personnel with experience in CPM scheduling and reporting techniques. Submit qualifications.
2. Meetings: Scheduling consultant shall attend all meetings related to Project progress, alleged delays, and time impact.

C. Time Frame: Extend schedule from date established for commencement of the Work to date of Substantial Completion.

1. Contract completion date shall not be changed by submission of a schedule that shows an early completion date, unless specifically authorized by Change Order.

D. Activities: Treat each floor or separate area as a separate numbered activity for each main element of the Work. Comply with the following:

1. Activity Duration: Define activities so no activity is longer than 20 days, unless specifically allowed by Architect.
2. Procurement Activities: Include procurement process activities for the following long lead items and major items, requiring a cycle of more than 60 days, as separate activities in schedule. Procurement cycle activities include, but are not limited to, submittals, approvals, purchasing, fabrication, and delivery.
3. Submittal Review Time: Include review and resubmittal times indicated in Section 01 3300 "Submittal Procedures" in schedule. Coordinate submittal review times in Contractor's Construction Schedule with submittal schedule.
4. Startup and Testing Time: Include no fewer than 15 days for startup and testing.
5. Commissioning Time: Include no fewer than 15 days for commissioning.
6. Substantial Completion: Indicate completion in advance of date established for Substantial Completion, and allow time for Architect's administrative procedures necessary for certification of Substantial Completion.
7. Punch List and Final Completion: Include not more than 30 days for completion of punch list items and final completion.

E. Constraints: Include constraints and work restrictions indicated in the Contract Documents and as follows in schedule, and show how the sequence of the Work is affected.

1. Phasing: Arrange list of activities on schedule by phase.
2. Work under More Than One Contract: Include a separate activity for each contract.
3. Work by Owner: Include a separate activity for each portion of the Work performed by Owner.
4. Products Ordered in Advance: Include a separate activity for each product. Include delivery date indicated in Section 01 1000 "Summary." Delivery dates indicated stipulate the earliest possible delivery date.
5. Owner-Furnished Products: Include a separate activity for each product. Include delivery date indicated in Section 01 1000 "Summary." Delivery dates indicated stipulate the earliest possible delivery date.
6. Work Restrictions: Show the effect of the following items on the schedule:

    a. Coordination with existing construction.
    b. Limitations of continued occupancies.
    c. Uninterruptible services.
    d. Partial occupancy before Substantial Completion.
    e. Use-of-premises restrictions.
    f. Provisions for future construction.
    g. Seasonal variations.
    h. Environmental control.

7. Work Stages: Indicate important stages of construction for each major portion of the Work, including, but not limited to, the following:

    a. Subcontract awards.
    b. Submittals.
    c. Purchases.
    d. Mockups.
    e. Fabrication.
    f. Sample testing.
    g. Deliveries.
    h. Installation.
    i. Tests and inspections.
    j. Adjusting.
    k. Curing.
    l. Building flush-out.
    m. Startup and placement into final use and operation.
    n. Commissioning.

8. Construction Areas: Identify each major area of construction for each major portion of the Work. Indicate where each construction activity within a major area must be sequenced or integrated with other construction activities to provide for the following:

    a. Structural completion.
    b. Temporary enclosure and space conditioning.
    c. Permanent space enclosure.
    d. Completion of mechanical installation.

e. Completion of electrical installation.
f. Substantial Completion.

F. Milestones: Include milestones indicated in the Contract Documents in schedule, including, but not limited to, the Notice to Proceed, Substantial Completion, and final completion, and the following interim milestones:

1. Temporary enclosure and space conditioning.

G. Cost Correlation: Superimpose a cost correlation timeline, indicating planned and actual costs. On the line, show planned and actual dollar volume of the Work performed as of planned and actual dates used for preparation of payment requests.

1. See Section 01 2900 "Payment Procedures" for cost reporting and payment procedures.

H. Upcoming Work Summary: Prepare summary report indicating activities scheduled to occur or commence prior to submittal of next schedule update. Summarize the following issues:

1. Unresolved issues.
2. Unanswered Requests for Information.
3. Rejected or unreturned submittals.
4. Notations on returned submittals.
5. Pending modifications affecting the Work and the Contract Time.

I. Contractor's Construction Schedule Updating: At monthly intervals, update schedule to reflect actual construction progress and activities. Issue schedule one week before each regularly scheduled progress meeting.

1. Revise schedule immediately after each meeting or other activity where revisions have been recognized or made. Issue updated schedule concurrently with the report of each such meeting.
2. Include a report with updated schedule that indicates every change, including, but not limited to, changes in logic, durations, actual starts and finishes, and activity durations.
3. As the Work progresses, indicate final completion percentage for each activity.

J. Recovery Schedule: When periodic update indicates the Work is 14 or more calendar days behind the current approved schedule, submit a separate recovery schedule indicating means by which Contractor intends to regain compliance with the schedule. Indicate changes to working hours, working days, crew sizes, equipment required to achieve compliance, and date by which recovery will be accomplished.

K. Distribution: Distribute copies of approved schedule to Architect, Owner, separate contractors, testing and inspecting agencies, and other parties identified by Contractor with a need-to-know schedule responsibility.

1. Post copies in Project meeting rooms and temporary field offices.

2. When revisions are made, distribute updated schedules to the same parties and post in the same locations. Delete parties from distribution when they have completed their assigned portion of the Work and are no longer involved in performance of construction activities.

1.8 STARTUP CONSTRUCTION SCHEDULE

A. Gantt-Chart Schedule: Submit startup, horizontal, Gantt-chart-type construction schedule within seven days of date established for commencement of the Work.

B. Preparation: Indicate each significant construction activity separately. Identify first workday of each week with a continuous vertical line. Outline significant construction activities for first 90 days of construction. Include skeleton diagram for the remainder of the Work and a cash requirement prediction based on indicated activities.

1.9 GANTT-CHART SCHEDULE REQUIREMENTS

A. Gantt-Chart Schedule: Submit a comprehensive, fully developed, horizontal, Gantt-chart-type, Contractor's Construction Schedule within 30 days of date established for commencement of the Work.

1. Base schedule on the startup construction schedule and additional information received since the start of Project.

B. Preparation: Indicate each significant construction activity separately. Identify first workday of each week with a continuous vertical line.

1. For construction activities that require three months or longer to complete, indicate an estimated completion percentage in 10 percent increments within time bar.

1.10 CPM SCHEDULE REQUIREMENTS

A. General: Prepare network diagrams using AON (activity-on-node) format.

B. Startup Network Diagram: Submit diagram within 14 days of date established for commencement of the Work. Outline significant construction activities for the first 90 days of construction. Include skeleton diagram for the remainder of the Work and a cash requirement prediction based on indicated activities.

C. CPM Schedule: Prepare Contractor's Construction Schedule using time-scaled CPM network analysis diagram for the Work.

1. Develop network diagram in sufficient time to submit CPM schedule so it can be accepted for use no later than 60 days after date established for commencement of the Work.

a. Failure to include any work item required for performance of this Contract shall not excuse Contractor from completing all work within applicable completion dates.

2. Conduct educational workshops to train and inform key Project personnel, including subcontractors' personnel, in proper methods of providing data and using CPM schedule information.
3. Establish procedures for monitoring and updating CPM schedule and for reporting progress. Coordinate procedures with progress meeting and payment request dates.
4. Use "one workday" as the unit of time for individual activities. Indicate nonworking days and holidays incorporated into the schedule to coordinate with the Contract Time.

D. CPM Schedule Preparation: Prepare a list of all activities required to complete the Work. Using the startup network diagram, prepare a skeleton network to identify probable critical paths.

1. Activities: Indicate the estimated time duration, sequence requirements, and relationship of each activity in relation to other activities. Include estimated time frames for the following activities:

a. Preparation and processing of submittals.
b. Mobilization and demobilization.
c. Purchase of materials.
d. Delivery.
e. Fabrication.
f. Utility interruptions.
g. Installation.
h. Work by Owner that may affect or be affected by Contractor's activities.
i. Testing and inspection.
j. Commissioning.
k. Punch list and final completion.
l. Activities occurring following final completion.

2. Critical Path Activities: Identify critical path activities, including those for interim completion dates. Scheduled start and completion dates shall be consistent with Contract milestone dates.
3. Processing: Process data to produce output data on a computer-drawn, time-scaled network. Revise data, reorganize activity sequences, and reproduce as often as necessary to produce the CPM schedule within the limitations of the Contract Time.
4. Format: Mark the critical path. Locate the critical path near center of network; locate paths with most float near the edges.

a. Subnetworks on separate sheets are permissible for activities clearly off the critical path.

5. Cost- and Resource-Loading of CPM Schedule: Assign cost to construction activities on the CPM schedule. Do not assign costs to submittal activities. Obtain Architect's approval prior to assigning costs to fabrication and delivery activities. Assign costs under main subcontracts for testing and commissioning activities, operation and maintenance manuals, punch list activities, Project record documents, and demonstration and training (if applicable), in the amount of 5 percent of the Contract Sum.

    a. Each activity cost shall reflect an appropriate value subject to approval by Architect.
    b. Total cost assigned to activities shall equal the total Contract Sum.

E. Contract Modifications: For each proposed contract modification and concurrent with its submission, prepare a time-impact analysis using a network fragment to demonstrate the effect of the proposed change on the overall Project schedule.

F. Initial Issue of Schedule: Prepare initial network diagram from a sorted activity list indicating straight "early start-total float." Identify critical activities. Prepare tabulated reports showing the following:

1. Contractor or subcontractor and the Work or activity.
2. Description of activity.
3. Main events of activity.
4. Immediate preceding and succeeding activities.
5. Early and late start dates.
6. Early and late finish dates.
7. Activity duration in workdays.
8. Total float or slack time.
9. Average size of workforce.
10. Dollar value of activity (coordinated with the schedule of values).

G. Schedule Updating: Concurrent with making revisions to schedule, prepare tabulated reports showing the following:

1. Identification of activities that have changed.
2. Changes in early and late start dates.
3. Changes in early and late finish dates.
4. Changes in activity durations in workdays.
5. Changes in the critical path.
6. Changes in total float or slack time.
7. Changes in the Contract Time.

H. Value Summaries: Prepare two cumulative value lists, sorted by finish dates.

1. In first list, tabulate activity number, early finish date, dollar value, and cumulative dollar value.
2. In second list, tabulate activity number, late finish date, dollar value, and cumulative dollar value.

3. In subsequent issues of both lists, substitute actual finish dates for activities completed as of list date.
4. Prepare list for ease of comparison with payment requests; coordinate timing with progress meetings.

    a. In both value summary lists, tabulate "actual percent complete" and "cumulative value completed" with total at bottom.
    b. Submit value summary printouts one week before each regularly scheduled progress meeting.

1.11 REPORTS

A. Daily Construction Reports: Prepare a daily construction report recording the following information concerning events at Project site:

1. List of subcontractors at Project site.
2. List of separate contractors at Project site.
3. Approximate count of personnel at Project site.
4. Equipment at Project site.
5. Material deliveries.
6. High and low temperatures and general weather conditions, including presence of rain or snow.
7. Testing and inspection.
8. Accidents.
9. Meetings and significant decisions.
10. Unusual events.
11. Stoppages, delays, shortages, and losses.
12. Meter readings and similar recordings.
13. Emergency procedures.
14. Orders and requests of authorities having jurisdiction.
15. Change Orders received and implemented.
16. Change Directives received and implemented.
17. Services connected and disconnected.
18. Equipment or system tests and startups.
19. Partial completions and occupancies.
20. Substantial Completions authorized.

B. Material Location Reports: At monthly intervals, prepare and submit a comprehensive list of materials delivered to and stored at Project site. List shall be cumulative, showing materials previously reported plus items recently delivered. Include with list a statement of progress on and delivery dates for materials or items of equipment fabricated or stored away from Project site. Indicate the following categories for stored materials:

1. Material stored prior to previous report and remaining in storage.
2. Material stored prior to previous report and since removed from storage and installed.
3. Material stored following previous report and remaining in storage.

C. Site Condition Reports: Immediately on discovery of a difference between site conditions and the Contract Documents, prepare and submit a detailed report. Submit with a Request for Information. Include a detailed description of the differing conditions, together with recommendations for changing the Contract Documents.

D. Unusual Event Reports: When an event of an unusual and significant nature occurs at Project site, whether or not related directly to the Work, prepare and submit a special report. List chain of events, persons participating, responses by Contractor's personnel, evaluation of results or effects, and similar pertinent information. Advise Owner in advance when these events are known or predictable.

1. Submit unusual event reports directly to Owner within one day of an occurrence. Distribute copies of report to parties affected by the occurrence.

PART 2 - PRODUCTS (Not Used)

PART 3 - EXECUTION (Not Used)

END OF SECTION 01 3200

SECTION 01 3300 - SUBMITTAL PROCEDURES

PART 1 - GENERAL

1.1 RELATED DOCUMENTS

A. Drawings and general provisions of the Contract, including General and Supplementary Conditions and other Division 01 Specification Sections, apply to this Section.

1.2 SUMMARY

A. Section Includes:

1. Submittal schedule requirements.
2. Administrative and procedural requirements for submittals.

B. Related Requirements:

1. Section 01 2900 "Payment Procedures" for submitting Applications for Payment and the schedule of values.
2. Section 01 3100 "Project Management and Coordination" for submitting coordination drawings and subcontract list and for requirements for web-based Project software.
3. Section 01 3200 "Construction Progress Documentation" for submitting schedules and reports, including Contractor's construction schedule.
4. Section 01 3233 "Photographic Documentation" for submitting preconstruction photographs, periodic construction photographs, and final completion construction photographs.
5. Section 01 4000 "Quality Requirements" for submitting test and inspection reports, and schedule of tests and inspections.
6. Section 01 7700 "Closeout Procedures" for submitting closeout submittals and maintenance material submittals.
7. Section 01 7823 "Operation and Maintenance Data" for submitting operation and maintenance manuals.
8. Section 01 78 39 "Project Record Documents" for submitting record Drawings, record Specifications, and record Product Data.
9. Section 01 79 00 "Demonstration and Training" for submitting video recordings of demonstration of equipment and training of Owner's personnel.

1.3 DEFINITIONS

A. Action Submittals: Written and graphic information and physical samples that require Architect's responsive action. Action submittals are those submittals indicated in individual Specification Sections as "action submittals."

B. Informational Submittals: Written and graphic information and physical samples that do not require Architect's responsive action. Submittals may be rejected for not complying with requirements. Informational submittals are those submittals indicated in individual Specification Sections as "informational submittals."

1.4 SUBMITTAL SCHEDULE

A. Submittal Schedule: Submit, as an action submittal, a list of submittals, arranged in chronological order by dates required by construction schedule. Include time required for review, ordering, manufacturing, fabrication, and delivery when establishing dates. Include additional time required for making corrections or revisions to submittals noted by Architect and additional time for handling and reviewing submittals required by those corrections.

1. Coordinate submittal schedule with list of subcontracts, the schedule of values, and Contractor's construction schedule.
2. Initial Submittal: Submit concurrently with startup construction schedule. Include submittals required during the first 60 days of construction. List those submittals required to maintain orderly progress of the Work and those required early because of long lead time for manufacture or fabrication.
3. Final Submittal: Submit concurrently with the first complete submittal of Contractor's construction schedule.

    a. Submit revised submittal schedule to reflect changes in current status and timing for submittals.

4. Format: Arrange the following information in a tabular format:

    a. Scheduled date for first submittal.
    b. Specification Section number and title.
    c. Submittal Category: Action; informational.
    d. Name of subcontractor.
    e. Description of the Work covered.
    f. Scheduled date for Architect's final release or approval.
    g. Scheduled dates for purchasing.
    h. Scheduled date of fabrication.
    i. Scheduled dates for installation.
    j. Activity or event number.

1.5 SUBMITTAL FORMATS

A. Submittal Information: Include the following information in each submittal:

1. Project name.
2. Date.
3. Name of Architect.
4. Name of Construction Manager.
5. Name of Contractor.
6. Name of firm or entity that prepared submittal.
7. Names of subcontractor, manufacturer, and supplier.
8. Unique submittal number, including revision identifier. Include Specification Section number with sequential alphanumeric identifier; and alphanumeric suffix for resubmittals.
9. Category and type of submittal.
10. Submittal purpose and description.
11. Number and title of Specification Section, with paragraph number and generic name for each of multiple items.
12. Drawing number and detail references, as appropriate.
13. Indication of full or partial submittal.
14. Location(s) where product is to be installed, as appropriate.
15. Other necessary identification.
16. Remarks.
17. Signature of transmitter.

B. Options: Identify options requiring selection by Architect.

C. Deviations and Additional Information: On each submittal, clearly indicate deviations from requirements in the Contract Documents, including minor variations and limitations; include relevant additional information and revisions, other than those requested by Architect on previous submittals. Indicate by highlighting on each submittal or noting on attached separate sheet.

D. PDF Submittals: Prepare submittals as PDF package, incorporating complete information into each PDF file. Name PDF file with submittal number.

E. Submittals for Web-Based Project Software: Prepare submittals as PDF files, or other format indicated by Project software website.

1.6 SUBMITTAL PROCEDURES

A. Prepare and submit submittals required by individual Specification Sections. Types of submittals are indicated in individual Specification Sections.

1. Email: Prepare submittals as PDF package, and transmit to Architect by sending via email. Include PDF transmittal form. Include information in email subject line as requested by Architect.

    a. Architect will return annotated file. Annotate and retain one copy of file as a digital Project Record Document file.

2. Web-Based Project Software: Prepare submittals in PDF form, and upload to web-based Project software website. Enter required data in web-based software site to fully identify submittal.
3. Paper: Prepare submittals in paper form, and deliver to Architect.

B. Coordination: Coordinate preparation and processing of submittals with performance of construction activities.

1. Coordinate each submittal with fabrication, purchasing, testing, delivery, other submittals, and related activities that require sequential activity.
2. Submit all submittal items required for each Specification Section concurrently unless partial submittals for portions of the Work are indicated on approved submittal schedule.
3. Submit action submittals and informational submittals required by the same Specification Section as separate packages under separate transmittals.
4. Coordinate transmittal of submittals for related parts of the Work specified in different Sections so processing will not be delayed because of need to review submittals concurrently for coordination.

    a. Architect reserves the right to withhold action on a submittal requiring coordination with other submittals until related submittals are received.

C. Processing Time: Allow time for submittal review, including time for resubmittals, as follows. Time for review shall commence on Architect's receipt of submittal. No extension of the Contract Time will be authorized because of failure to transmit submittals enough in advance of the Work to permit processing, including resubmittals.

1. Initial Review: Allow 10 business days for initial review of each submittal. Allow additional time if coordination with subsequent submittals is required. Architect will advise Contractor when a submittal being processed must be delayed for coordination.
2. Intermediate Review: If intermediate submittal is necessary, process it in same manner as initial submittal.
3. Resubmittal Review: Allow 10 business days for review of each resubmittal.
4. Sequential Review: Where sequential review of submittals by Architect's consultants, Owner, or other parties is indicated, allow 15 business days for initial review of each submittal.
5. Concurrent Consultant Review: Where the Contract Documents indicate that submittals may be transmitted simultaneously to Architect and to Architect's consultants, allow 10 business days for review of each submittal. Submittal will be returned to Architect before being returned to Contractor.

a. Submit one copy of submittal to concurrent reviewer in addition to specified number of copies to Architect.

D. Resubmittals: Make resubmittals in same form and number of copies as initial submittal.

1. Note date and content of previous submittal.
2. Note date and content of revision in label or title block and clearly indicate extent of revision.
3. Resubmit submittals until they are marked with approval notation from Architect's action stamp.

E. Distribution: Furnish copies of final submittals to manufacturers, subcontractors, suppliers, fabricators, installers, authorities having jurisdiction, and others as necessary for performance of construction activities. Show distribution on transmittal forms.

F. Use for Construction: Retain complete copies of submittals on Project site. Use only final action submittals that are marked with approval notation from Architect's action stamp.

G. Action Stamp: The Architect will stamp each submittal with a uniform, action stamp. The Architect will mark the stamp appropriately to indicate the action take as follows:
1. Final Unrestricted Release: The Work covered by the submittal may proceed provided it complies with requirements of the Contract Documents. Final payment depends on that compliance.
   a. Marking: “Approved for Design.”
2. Final-But-Restricted Release: The Work covered by the submittal may proceed provided it complies with notations or corrections on the submittal and requirements of the Contract Documents. Final payment depends on that compliance.
   a. Marking: “Approved For Design as Noted.”
3. Returned for Resubmittal: DO no proceed with Work covered by the submittal, including purchasing, fabrication, deliver, or other activity. Revise or prepare a new submittal according to the notations; resubmit without delay. Repeat if necessary to obtain different action mark.
   a. Marking: “Rejected-Resubmit”
   b. Do not use, or allow others to use, submittals marked “Rejected, Resubmit” at the Project Site or elsewhere where Work is in process.
4. Non-Complying Submittals: Submittals which do not comply with the Contract Documents shall not be submitted. Should a submittal which does not comply with the Contract Documents be forwarded, said submittal will be returned without action.
5. Other Action: Where a submittal is for information or record purposes or special processing or other activity, the Architect will return the submittal.
   a. Marking: “Action Not Required.”

1.7 SUBMITTAL REQUIREMENTS

A. Product Data: Collect information into a single submittal for each element of construction and type of product or equipment.

1. If information must be specially prepared for submittal because standard published data are unsuitable for use, submit as Shop Drawings, not as Product Data.
2. Mark each copy of each submittal to show which products and options are applicable.
3. Include the following information, as applicable:

    a. Manufacturer's catalog cuts.
    b. Manufacturer's product specifications.
    c. Standard color charts.
    d. Statement of compliance with specified referenced standards.
    e. Testing by recognized testing agency.
    f. Application of testing agency labels and seals.
    g. Notation of coordination requirements.
    h. Availability and delivery time information.

4. For equipment, include the following in addition to the above, as applicable:

    a. Wiring diagrams that show factory-installed wiring.
    b. Printed performance curves.
    c. Operational range diagrams.
    d. Clearances required to other construction, if not indicated on accompanying Shop Drawings.

5. Submit Product Data before Shop Drawings, and before or concurrent with Samples.

B. Shop Drawings: Prepare Project-specific information, drawn accurately to scale. Do not base Shop Drawings on reproductions of the Contract Documents or standard printed data unless submittal based on Architect's digital data drawing files is otherwise permitted.

1. Preparation: Fully illustrate requirements in the Contract Documents. Include the following information, as applicable:

    a. Identification of products.
    b. Schedules.
    c. Compliance with specified standards.
    d. Notation of coordination requirements.
    e. Notation of dimensions established by field measurement.
    f. Relationship and attachment to adjoining construction clearly indicated.
    g. Seal and signature of professional engineer if specified.

2. BIM Incorporation: Develop and incorporate Shop Drawing files into BIM established for Project.

C. Samples: Submit Samples for review of kind, color, pattern, and texture for a check of these characteristics with other materials.

1. Transmit Samples that contain multiple, related components such as accessories together in one submittal package.

2. Identification: Permanently attach label on unexposed side of Samples that includes the following:

    a. Project name and submittal number.
    b. Generic description of Sample.
    c. Product name and name of manufacturer.
    d. Sample source.
    e. Number and title of applicable Specification Section.
    f. Specification paragraph number and generic name of each item.

3. Email Transmittal: Provide PDF transmittal. Include digital image file illustrating Sample characteristics, and identification information for record.
4. Web-Based Project Software: Prepare submittals in PDF form, and upload to web-based Project software website. Enter required data in web-based software site to fully identify submittal.
5. Paper Transmittal: Include paper transmittal including complete submittal information indicated.
6. Disposition: Maintain sets of approved Samples at Project site, available for quality-control comparisons throughout the course of construction activity. Sample sets may be used to determine final acceptance of construction associated with each set.

    a. Samples that may be incorporated into the Work are indicated in individual Specification Sections. Such Samples must be in an undamaged condition at time of use.
    b. Samples not incorporated into the Work, or otherwise designated as Owner's property, are the property of Contractor.

7. Samples for Initial Selection: Submit manufacturer's color charts consisting of units or sections of units showing the full range of colors, textures, and patterns available.

    a. Number of Samples: Submit one full set(s) of available choices where color, pattern, texture, or similar characteristics are required to be selected from manufacturer's product line. Architect will return submittal with options selected.

8. Samples for Verification: Submit full-size units or Samples of size indicated, prepared from same material to be used for the Work, cured and finished in manner specified, and physically identical with material or product proposed for use, and that show full range of color and texture variations expected. Samples include, but are not limited to, the following: partial sections of manufactured or fabricated components; small cuts or containers of materials; complete units of repetitively used materials; swatches showing color, texture, and pattern; color range sets; and components used for independent testing and inspection.

    a. Number of Samples: Submit three sets of Samples. Architect will retain two Sample sets; remainder will be returned. Mark up and retain one returned Sample set as a project record Sample.

1) Submit a single Sample where assembly details, workmanship, fabrication techniques, connections, operation, and other similar characteristics are to be demonstrated.
2) If variation in color, pattern, texture, or other characteristic is inherent in material or product represented by a Sample, submit at least three sets of paired units that show approximate limits of variations.

D. Product Schedule: As required in individual Specification Sections, prepare a written summary indicating types of products required for the Work and their intended location. Include the following information in tabular form:

1. Type of product. Include unique identifier for each product indicated in the Contract Documents or assigned by Contractor if none is indicated.
2. Manufacturer and product name, and model number if applicable.
3. Number and name of room or space.
4. Location within room or space.

E. Qualification Data: Prepare written information that demonstrates capabilities and experience of firm or person. Include lists of completed projects with project names and addresses, contact information of architects and owners, and other information specified.

F. Design Data: Prepare and submit written and graphic information indicating compliance with indicated performance and design criteria in individual Specification Sections. Include list of assumptions and summary of loads. Include load diagrams if applicable. Provide name and version of software, if any, used for calculations. Number each page of submittal.

G. Certificates:

1. Certificates and Certifications Submittals: Submit a statement that includes signature of entity responsible for preparing certification. Certificates and certifications shall be signed by an officer or other individual authorized to sign documents on behalf of that entity. Provide a notarized signature where indicated.
2. Installer Certificates: Submit written statements on manufacturer's letterhead certifying that Installer complies with requirements in the Contract Documents and, where required, is authorized by manufacturer for this specific Project.
3. Manufacturer Certificates: Submit written statements on manufacturer's letterhead certifying that manufacturer complies with requirements in the Contract Documents. Include evidence of manufacturing experience where required.
4. Material Certificates: Submit written statements on manufacturer's letterhead certifying that material complies with requirements in the Contract Documents.
5. Product Certificates: Submit written statements on manufacturer's letterhead certifying that product complies with requirements in the Contract Documents.
6. Welding Certificates: Prepare written certification that welding procedures and personnel comply with requirements in the Contract Documents. Submit record of Welding Procedure Specification and Procedure Qualification Record on AWS forms. Include names of firms and personnel certified.

H. Test and Research Reports:

1. Compatibility Test Reports: Submit reports written by a qualified testing agency, on testing agency's standard form, indicating and interpreting results of compatibility tests performed before installation of product. Include written recommendations for primers and substrate preparation needed for adhesion.
2. Field Test Reports: Submit written reports indicating and interpreting results of field tests performed either during installation of product or after product is installed in its final location, for compliance with requirements in the Contract Documents.
3. Material Test Reports: Submit reports written by a qualified testing agency, on testing agency's standard form, indicating and interpreting test results of material for compliance with requirements in the Contract Documents.
4. Preconstruction Test Reports: Submit reports written by a qualified testing agency, on testing agency's standard form, indicating and interpreting results of tests performed before installation of product, for compliance with performance requirements in the Contract Documents.
5. Product Test Reports: Submit written reports indicating that current product produced by manufacturer complies with requirements in the Contract Documents. Base reports on evaluation of tests performed by manufacturer and witnessed by a qualified testing agency, or on comprehensive tests performed by a qualified testing agency.
6. Research Reports: Submit written evidence, from a model code organization acceptable to authorities having jurisdiction, that product complies with building code in effect for Project. Include the following information:

    a. Name of evaluation organization.
    b. Date of evaluation.
    c. Time period when report is in effect.
    d. Product and manufacturers' names.
    e. Description of product.
    f. Test procedures and results.
    g. Limitations of use.

1.8 DELEGATED-DESIGN SERVICES

A. Performance and Design Criteria: Where professional design services or certifications by a design professional are specifically required of Contractor by the Contract Documents, provide products and systems complying with specific performance and design criteria indicated.

1. If criteria indicated are insufficient to perform services or certification required, submit a written request for additional information to Architect.

B. Delegated-Design Services Certification: In addition to Shop Drawings, Product Data, and other required submittals, submit digitally signed PDF file and two paper copies of certificate, signed and sealed by the responsible design professional, for each product and system specifically assigned to Contractor to be designed or certified by a design professional.

1. Indicate that products and systems comply with performance and design criteria in the Contract Documents. Include list of codes, loads, and other factors used in performing these services.

C. BIM Incorporation: Incorporate delegated-design drawing and data files into BIM established for Project.

1. Prepare delegated-design drawings in the following format: Same digital data software program, version, and operating system as original Drawings.

1.9 CONTRACTOR'S REVIEW

A. Action Submittals and Informational Submittals: Review each submittal and check for coordination with other Work of the Contract and for compliance with the Contract Documents. Note corrections and field dimensions. Mark with approval stamp before submitting to Architect.

B. Contractor's Approval: Indicate Contractor's approval for each submittal with a uniform approval stamp. Include name of reviewer, date of Contractor's approval, and statement certifying that submittal has been reviewed, checked, and approved for compliance with the Contract Documents.

1. Architect will not review submittals received from Contractor that do not have Contractor's review and approval.

1.10 ARCHITECT'S REVIEW

A. Action Submittals: Architect will review each submittal, indicate corrections or revisions required, and return it.

1. PDF Submittals: Architect will indicate, via markup on each submittal, the appropriate action.
2. Submittals by Web-Based Project Software: Architect will indicate, on Project software website, the appropriate action.

B. Informational Submittals: Architect will review each submittal and will not return it, or will return it if it does not comply with requirements. Architect will forward each submittal to appropriate party.

C. Partial submittals prepared for a portion of the Work will be reviewed when use of partial submittals has received prior approval from Architect.

D. Incomplete submittals are unacceptable, will be considered nonresponsive, and will be returned for resubmittal without review.

E. Architect will return without review submittals received from sources other than Contractor.

F. Submittals not required by the Contract Documents will be returned by Architect without action.

PART 2 - PRODUCTS (Not Used)

PART 3 - EXECUTION (Not Used)

END OF SECTION 01 3300

SECTION 01 4000 - QUALITY REQUIREMENTS

PART 1 - GENERAL

1.1 RELATED DOCUMENTS

A. Drawings and general provisions of the Contract, including General and Supplementary Conditions and other Division 01 Specification Sections, apply to this Section.

1.2 SUMMARY

A. Section includes administrative and procedural requirements for quality assurance and quality control.

B. Testing and inspection services are required to verify compliance with requirements specified or indicated. These services do not relieve Contractor of responsibility for compliance with the Contract Document requirements.

1. Specific quality-assurance and quality-control requirements for individual work results are specified in their respective Specification Sections. Requirements in individual Sections may also cover production of standard products.
2. Specified tests, inspections, and related actions do not limit Contractor's other quality-assurance and quality-control procedures that facilitate compliance with the Contract Document requirements.
3. Requirements for Contractor to provide quality-assurance and quality-control services required by Architect, Owner, ǂ Commissioning Authority, or authorities having jurisdiction are not limited by provisions of this Section.
4. Specific test and inspection requirements are not specified in this Section.

1.3 DEFINITIONS

A. Experienced: When used with an entity or individual, "experienced" unless otherwise further described means having successfully completed a minimum of five previous projects similar in nature, size, and extent to this Project; being familiar with special requirements indicated; and having complied with requirements of authorities having jurisdiction.

B. Field Quality-Control Tests: Tests and inspections that are performed on-site for installation of the Work and for completed Work.

C. Installer/Applicator/Erector: Contractor or another entity engaged by Contractor as an employee, Subcontractor, or Sub-subcontractor, to perform a particular construction operation, including installation, erection, application, assembly, and similar operations.

1. Use of trade-specific terminology in referring to a trade or entity does not require that certain construction activities be performed by accredited or unionized individuals, or that requirements specified apply exclusively to specific trade(s).

D. Mockups: Full-size physical assemblies that are constructed on-site either as freestanding temporary built elements or as part of permanent construction. Mockups are constructed to verify selections made under Sample submittals; to demonstrate aesthetic effects and qualities of materials and execution; to review coordination, testing, or operation; to show interface between dissimilar materials; and to demonstrate compliance with specified installation tolerances. Mockups are not Samples. Unless otherwise indicated, approved mockups establish the standard by which the Work will be judged.

1. Laboratory Mockups: Full-size physical assemblies constructed and tested at testing facility to verify performance characteristics.
2. Integrated Exterior Mockups: Mockups of the exterior envelope constructed on-site as freestanding temporary built elements, consisting of multiple products, assemblies, and subassemblies.
3. Room Mockups: Mockups of typical interior spaces complete with wall, floor, and ceiling finishes; doors; windows; millwork; casework; specialties; furnishings and equipment; and lighting.

E. Preconstruction Testing: Tests and inspections performed specifically for Project before products and materials are incorporated into the Work, to verify performance or compliance with specified criteria.

F. Product Tests: Tests and inspections that are performed by a nationally recognized testing laboratory (NRTL) according to 29 CFR 1910.7, by a testing agency accredited according to NIST's National Voluntary Laboratory Accreditation Program (NVLAP), or by a testing agency qualified to conduct product testing and acceptable to authorities having jurisdiction, to establish product performance and compliance with specified requirements.

G. Source Quality-Control Tests: Tests and inspections that are performed at the source; for example, plant, mill, factory, or shop.

H. Testing Agency: An entity engaged to perform specific tests, inspections, or both. Testing laboratory shall mean the same as testing agency.

I. Quality-Assurance Services: Activities, actions, and procedures performed before and during execution of the Work to guard against defects and deficiencies and substantiate that proposed construction will comply with requirements.

J. Quality-Control Services: Tests, inspections, procedures, and related actions during and after execution of the Work to evaluate that actual products incorporated into the Work and completed construction comply with requirements. Contractor's quality-control services do not include contract administration activities performed by Architect.

1.4 DELEGATED-DESIGN SERVICES

A. Performance and Design Criteria: Where professional design services or certifications by a design professional are specifically required of Contractor by the Contract Documents, provide products and systems complying with specific performance and design criteria indicated.

1. If criteria indicated are not sufficient to perform services or certification required, submit a written request for additional information to Architect.

1.5 CONFLICTING REQUIREMENTS

A. Conflicting Standards and Other Requirements: If compliance with two or more standards or requirements are specified and the standards or requirements establish different or conflicting requirements for minimum quantities or quality levels, comply with the most stringent requirement. Refer conflicting requirements that are different, but apparently equal, to Architect for direction before proceeding.

B. Minimum Quantity or Quality Levels: The quantity or quality level shown or specified shall be the minimum provided or performed. The actual installation may comply exactly with the minimum quantity or quality specified, or it may exceed the minimum within reasonable limits. To comply with these requirements, indicated numeric values are minimum or maximum, as appropriate, for the context of requirements. Refer uncertainties to Architect for a decision before proceeding.

1.6 ACTION SUBMITTALS

A. Shop Drawings: For integrated exterior mockups.

1. Include plans, sections, and elevations, indicating materials and size of mockup construction.
2. Indicate manufacturer and model number of individual components.
3. Provide axonometric drawings for conditions difficult to illustrate in two dimensions.

B. Delegated-Design Services Submittal: In addition to Shop Drawings, Product Data, and other required submittals, submit a statement signed and sealed by the responsible design professional, for each product and system specifically assigned to Contractor to be designed or certified by a design professional, indicating that the products and systems are in compliance with performance and design criteria indicated. Include list of codes, loads, and other factors used in performing these services.

1.7 INFORMATIONAL SUBMITTALS

A. Contractor's Quality-Control Plan: For quality-assurance and quality-control activities and responsibilities.

B. Qualification Data: For Contractor's quality-control personnel.

C. Contractor's Statement of Responsibility: When required by authorities having jurisdiction, submit copy of written statement of responsibility submitted to authorities having jurisdiction before starting work on the following systems:

1. Seismic-force-resisting system, designated seismic system, or component listed in the Statement of Special Inspections.
2. Main wind-force-resisting system or a wind-resisting component listed in the Statement of Special Inspections.

D. Testing Agency Qualifications: For testing agencies specified in "Quality Assurance" Article to demonstrate their capabilities and experience. Include proof of qualifications in the form of a recent report on the inspection of the testing agency by a recognized authority.

E. Schedule of Tests and Inspections: Prepare in tabular form and include the following:

1. Specification Section number and title.
2. Entity responsible for performing tests and inspections.
3. Description of test and inspection.
4. Identification of applicable standards.
5. Identification of test and inspection methods.
6. Number of tests and inspections required.
7. Time schedule or time span for tests and inspections.
8. Requirements for obtaining samples.
9. Unique characteristics of each quality-control service.

F. Reports: Prepare and submit certified written reports and documents as specified.

G. Permits, Licenses, and Certificates: For Owner's record, submit copies of permits, licenses, certifications, inspection reports, releases, jurisdictional settlements, notices, receipts for fee payments, judgments, correspondence, records, and similar documents established for compliance with standards and regulations bearing on performance of the Work.

1.8 CONTRACTOR'S QUALITY-CONTROL PLAN

A. Quality-Control Plan, General: Submit quality-control plan within 10 days of Notice of Award and not less than five days prior to preconstruction conference. Submit in format acceptable to Architect. Identify personnel, procedures, controls, instructions, tests, records, and forms to be used to carry out Contractor's quality-assurance and quality-control responsibilities. Coordinate with Contractor's Construction Schedule.

B. Quality-Control Personnel Qualifications: Engage qualified personnel trained and experienced in managing and executing quality-assurance and quality-control procedures similar in nature and extent to those required for Project.

1. Project quality-control manager shall-not have other Project responsibilities.

C. Submittal Procedure: Describe procedures for ensuring compliance with requirements through review and management of submittal process. Indicate qualifications of personnel responsible for submittal review.

D. Testing and Inspection: In quality-control plan, include a comprehensive schedule of Work requiring testing or inspection, including the following:

1. Contractor-performed tests and inspections including Subcontractor-performed tests and inspections. Include required tests and inspections and Contractor-elected tests and inspections. Distinguish source quality-control tests and inspections from field quality-control tests and inspections.
2. Special inspections required by authorities having jurisdiction and indicated on the Statement of Special Inspections.
3. Owner-performed tests and inspections indicated in the Contract Documents-, including tests and inspections indicated to be performed by Commissioning Authority.

E. Continuous Inspection of Workmanship: Describe process for continuous inspection during construction to identify and correct deficiencies in workmanship in addition to testing and inspection specified. Indicate types of corrective actions to be required to bring work into compliance with standards of workmanship established by Contract requirements and approved mockups.

F. Monitoring and Documentation: Maintain testing and inspection reports including log of approved and rejected results. Include work Architect has indicated as nonconforming or defective. Indicate corrective actions taken to bring nonconforming work into compliance with requirements. Comply with requirements of authorities having jurisdiction.

1.9 REPORTS AND DOCUMENTS

A. Test and Inspection Reports: Prepare and submit certified written reports specified in other Sections. Include the following:

1. Date of issue.
2. Project title and number.
3. Name, address, telephone number, and email address of testing agency.
4. Dates and locations of samples and tests or inspections.
5. Names of individuals making tests and inspections.
6. Description of the Work and test and inspection method.
7. Identification of product and Specification Section.
8. Complete test or inspection data.
9. Test and inspection results and an interpretation of test results.
10. Record of temperature and weather conditions at time of sample taking and testing and inspection.
11. Comments or professional opinion on whether tested or inspected Work complies with the Contract Document requirements.
12. Name and signature of laboratory inspector.
13. Recommendations on retesting and reinspecting.

B. Manufacturer's Technical Representative's Field Reports: Prepare written information documenting manufacturer's technical representative's tests and inspections specified in other Sections. Include the following:

1. Name, address, telephone number, and email address of technical representative making report.
2. Statement on condition of substrates and their acceptability for installation of product.
3. Statement that products at Project site comply with requirements.
4. Summary of installation procedures being followed, whether they comply with requirements and, if not, what corrective action was taken.
5. Results of operational and other tests and a statement of whether observed performance complies with requirements.
6. Statement whether conditions, products, and installation will affect warranty.
7. Other required items indicated in individual Specification Sections.

C. Factory-Authorized Service Representative's Reports: Prepare written information documenting manufacturer's factory-authorized service representative's tests and inspections specified in other Sections. Include the following:

1. Name, address, telephone number, and email address of factory-authorized service representative making report.
2. Statement that equipment complies with requirements.
3. Results of operational and other tests and a statement of whether observed performance complies with requirements.
4. Statement whether conditions, products, and installation will affect warranty.
5. Other required items indicated in individual Specification Sections.

1.10 QUALITY ASSURANCE

A. General: Qualifications paragraphs in this article establish the minimum qualification levels required; individual Specification Sections specify additional requirements.

B. Manufacturer Qualifications: A firm experienced in manufacturing products or systems similar to those indicated for this Project and with a record of successful in-service performance, as well as sufficient production capacity to produce required units. As applicable, procure products from manufacturers able to meet qualification requirements, warranty requirements, and technical or factory-authorized service representative requirements.

C. Fabricator Qualifications: A firm experienced in producing products similar to those indicated for this Project and with a record of successful in-service performance, as well as sufficient production capacity to produce required units.

D. Installer Qualifications: A firm or individual experienced in installing, erecting, applying, or assembling work similar in material, design, and extent to that indicated for this Project, whose work has resulted in construction with a record of successful in-service performance.

E. Professional Engineer Qualifications: A professional engineer who is legally qualified to practice in jurisdiction where Project is located and who is experienced in providing engineering services of the kind indicated. Engineering services are defined as those performed for installations of the system, assembly, or product that are similar in material, design, and extent to those indicated for this Project.

F. Specialists: Certain Specification Sections require that specific construction activities shall be performed by entities who are recognized experts in those operations. Specialists shall satisfy qualification requirements indicated and shall be engaged for the activities indicated.

1. Requirements of authorities having jurisdiction shall supersede requirements for specialists.

G. Testing Agency Qualifications: An NRTL, an NVLAP, or an independent agency with the experience and capability to conduct testing and inspection indicated, as documented according to ASTM E329 and with additional qualifications specified in individual Sections; and, where required by authorities having jurisdiction, that is acceptable to authorities.

H. Manufacturer's Technical Representative Qualifications: An authorized representative of manufacturer who is trained and approved by manufacturer to observe and inspect installation of manufacturer's products that are similar in material, design, and extent to those indicated for this Project.

I. Factory-Authorized Service Representative Qualifications: An authorized representative of manufacturer who is trained and approved by manufacturer to inspect installation of manufacturer's products that are similar in material, design, and extent to those indicated for this Project.

J. Preconstruction Testing: Where testing agency is indicated to perform preconstruction testing for compliance with specified requirements for performance and test methods, comply with the following:

1. Contractor responsibilities include the following:

a. Provide test specimens representative of proposed products and construction.
b. Submit specimens in a timely manner with sufficient time for testing and analyzing results to prevent delaying the Work.
c. Provide sizes and configurations of test assemblies, mockups, and laboratory mockups to adequately demonstrate capability of products to comply with performance requirements.
d. Build site-assembled test assemblies and mockups using installers who will perform same tasks for Project.
e. Build laboratory mockups at testing facility using personnel, products, and methods of construction indicated for the completed Work.
f. When testing is complete, remove test specimens and test assemblies, and; do not reuse products on Project.

2. Testing Agency Responsibilities: Submit a certified written report of each test, inspection, and similar quality-assurance service to Architect and Commissioning Authority, with copy to Contractor. Interpret tests and inspections and state in each report whether tested and inspected work complies with or deviates from the Contract Documents.

K. Mockups: Before installing portions of the Work requiring mockups, build mockups for each form of construction and finish required to comply with the following requirements, using materials indicated for the completed Work:

1. Build mockups of size indicated.
2. Build mockups in location indicated or, if not indicated, as directed by Architect
3. Notify Architect seven days in advance of dates and times when mockups will be constructed.
4. Employ supervisory personnel who will oversee mockup construction. Employ workers that will be employed to perform same tasks during the construction at Project.
5. Demonstrate the proposed range of aesthetic effects and workmanship.
6. Obtain Architect's approval of mockups before starting corresponding work, fabrication, or construction.

    a. Allow seven days for initial review and each re-review of each mockup.

7. Maintain mockups during construction in an undisturbed condition as a standard for judging the completed Work.
8. Demolish and remove mockups when directed unless otherwise indicated.

L. Integrated Exterior Mockups: Construct integrated exterior mockup as indicated on Drawings. Coordinate installation of exterior envelope materials and products for which mockups are required in individual Specification Sections, along with supporting materials. Comply with requirements in "Mockups" Paragraph.

1.11 QUALITY CONTROL

A. Owner Responsibilities: Where quality-control services are indicated as Owner's responsibility, Owner will engage a qualified testing agency to perform these services.

1. Owner will furnish Contractor with names, addresses, and telephone numbers of testing agencies engaged and a description of types of testing and inspection they are engaged to perform.
2. Payment for these services will be made from testing and inspection allowances, as authorized by Change Orders.
3. Costs for retesting and reinspecting construction that replaces or is necessitated by work that failed to comply with the Contract Documents will be charged to Contractor, and the Contract Sum will be adjusted by Change Order.

B. Contractor Responsibilities: Tests and inspections not explicitly assigned to Owner are Contractor's responsibility. Perform additional quality-control activities, whether specified or not, to verify and document that the Work complies with requirements.

1. Unless otherwise indicated, provide quality-control services specified and those required by authorities having jurisdiction. Perform quality-control services required of Contractor by authorities having jurisdiction, whether specified or not.
2. Engage a qualified testing agency to perform quality-control services.

    a. Contractor shall not employ same entity engaged by Owner, unless agreed to in writing by Owner.

3. Notify testing agencies at least 24 hours in advance of time when Work that requires testing or inspection will be performed.
4. Where quality-control services are indicated as Contractor's responsibility, submit a certified written report, in duplicate, of each quality-control service.
5. Testing and inspection requested by Contractor and not required by the Contract Documents are Contractor's responsibility.
6. Submit additional copies of each written report directly to authorities having jurisdiction, when they so direct.

C. Retesting/Reinspecting: Regardless of whether original tests or inspections were Contractor's responsibility, provide quality-control services, including retesting and reinspecting, for construction that replaced Work that failed to comply with the Contract Documents.

D. Testing Agency Responsibilities: Cooperate with Architect , Commissioning Authority, -and Contractor in performance of duties. Provide qualified personnel to perform required tests and inspections.

1. Notify Architect, Commissioning Authority, and Contractor promptly of irregularities or deficiencies observed in the Work during performance of its services.
2. Determine the locations from which test samples will be taken and in which in-situ tests are conducted.
3. Conduct and interpret tests and inspections and state in each report whether tested and inspected work complies with or deviates from requirements.
4. Submit a certified written report, in duplicate, of each test, inspection, and similar quality-control service through Contractor.
5. Do not release, revoke, alter, or increase the Contract Document requirements or approve or accept any portion of the Work.
6. Do not perform duties of Contractor.

E. Manufacturer's Field Services: Where indicated, engage a factory-authorized service representative to inspect field-assembled components and equipment installation, including service connections. Report results in writing as specified in Section 01 3300 "Submittal Procedures."

F. Manufacturer's Technical Services: Where indicated, engage a manufacturer's technical representative to observe and inspect the Work. Manufacturer's technical representative's services include participation in preinstallation conferences, examination of substrates and conditions, verification of materials, observation of Installer activities, inspection of completed portions of the Work, and submittal of written reports.

G. Associated Contractor Services: Cooperate with agencies and representatives performing required tests, inspections, and similar quality-control services, and provide reasonable auxiliary services as requested. Notify agency sufficiently in advance of operations to permit assignment of personnel. Provide the following:

1. Access to the Work.
2. Incidental labor and facilities necessary to facilitate tests and inspections.
3. Adequate quantities of representative samples of materials that require testing and inspection. Assist agency in obtaining samples.
4. Facilities for storage and field curing of test samples.
5. Delivery of samples to testing agencies.
6. Preliminary design mix proposed for use for material mixes that require control by testing agency.
7. Security and protection for samples and for testing and inspection equipment at Project site.

H. Coordination: Coordinate sequence of activities to accommodate required quality-assurance and quality-control services with a minimum of delay and to avoid necessity of removing and replacing construction to accommodate testing and inspection.

1. Schedule times for tests, inspections, obtaining samples, and similar activities.

I. Schedule of Tests and Inspections: Prepare a schedule of tests, inspections, and similar quality-control services required by the Contract Documents ╞ as a component of Contractor's quality-control plan ╡. Coordinate and submit concurrently with Contractor's Construction Schedule. Update as the Work progresses.

1. Distribution: Distribute schedule to Owner, Architect, Commissioning Authority, -testing agencies, and each party involved in performance of portions of the Work where tests and inspections are required.

1.12 SPECIAL TESTS AND INSPECTIONS

A. Special Tests and Inspections: Engage a qualified testing agency to conduct special tests and inspections required by authorities having jurisdiction as the responsibility of Owner and as follows:

1. Verifying that manufacturer maintains detailed fabrication and quality-control procedures and reviewing the completeness and adequacy of those procedures to perform the Work.
2. Notifying Architect , Commissioning Authority, and Contractor promptly of irregularities and deficiencies observed in the Work during performance of its services.
3. Submitting a certified written report of each test, inspection, and similar quality-control service to Architect ╞ and Commissioning Authority, with copy to Contractor and to authorities having jurisdiction.
4. Submitting a final report of special tests and inspections a Substantial Completion, which includes a list of unresolved deficiencies.
5. Interpreting tests and inspections and stating in each report whether tested and inspected work complies with or deviates from the Contract Documents.

6. Retesting and reinspecting corrected work.

B. Special Tests and Inspections: Conducted by a qualified testing agency as required by authorities having jurisdiction, as indicated in individual Specification Sections and as follows:

1. Verifying that manufacturer maintains detailed fabrication and quality-control procedures and reviewing the completeness and adequacy of those procedures to perform the Work.
2. Notifying Architect, Commissioning Authority, and Contractor promptly of irregularities and deficiencies observed in the Work during performance of its services.
3. Submitting a certified written report of each test, inspection, and similar quality-control service to Architect ŧ and Commissioning Authority, with copy to Contractor and to authorities having jurisdiction.
4. Submitting a final report of special tests and inspections at Substantial Completion, which includes a list of unresolved deficiencies.
5. Interpreting tests and inspections and stating in each report whether tested and inspected work complies with or deviates from the Contract Documents.
6. Retesting and reinspecting corrected work.

PART 2 - PRODUCTS (Not Used)

PART 3 - EXECUTION

3.1 TEST AND INSPECTION LOG

A. Test and Inspection Log: Prepare a record of tests and inspections. Include the following:

1. Date test or inspection was conducted.
2. Description of the Work tested or inspected.
3. Date test or inspection results were transmitted to Architect.
4. Identification of testing agency or special inspector conducting test or inspection.

B. Maintain log at Project site. Post changes and revisions as they occur. Provide access to test and inspection log for Architect's , Commissioning Authority's, reference during normal working hours.

1. Submit log at Project closeout as part of Project Record Documents.

3.2 REPAIR AND PROTECTION

A. General: On completion of testing, inspection, sample taking, and similar services, repair damaged construction and restore substrates and finishes.

1. Provide materials and comply with installation requirements specified in other Specification Sections or matching existing substrates and finishes. Restore patched areas and extend restoration into adjoining areas with durable seams that are as invisible as possible. Comply with the Contract Document requirements for cutting and patching in Section 01 7300 "Execution."

B. Protect construction exposed by or for quality-control service activities.

C. Repair and protection are Contractor's responsibility, regardless of the assignment of responsibility for quality-control services.

END OF SECTION 01 4000

SECTION 01 4200 – REFERENCES

PART 1 - GENERAL

1.1 RELATED DOCUMENTS

A. Drawings and general provisions of the Contract, including General and Supplementary Conditions and other Division 01 Specification Sections, apply to this Section.

1.2 DEFINITIONS

A. General: Basic Contract definitions are included in the Conditions of the Contract.

B. "Approved": When used to convey Architect's action on Contractor's submittals, applications, and requests, "approved" is limited to Architect's duties and responsibilities as stated in the Conditions of the Contract.

C. "Directed": A command or instruction by Architect. Other terms including "requested," "authorized," "selected," "required," and "permitted" have the same meaning as "directed."

D. "Indicated": Requirements expressed by graphic representations or in written form on Drawings, in Specifications, and in other Contract Documents. Other terms including "shown," "noted," "scheduled," and "specified" have the same meaning as "indicated."

E. "Regulations": Laws, ordinances, statutes, and lawful orders issued by authorities having jurisdiction, and rules, conventions, and agreements within the construction industry that control performance of the Work.

F. "Furnish": Supply and deliver to Project site, ready for unloading, unpacking, assembly, installation, and similar operations.

G. "Install": Unload, temporarily store, unpack, assemble, erect, place, anchor, apply, work to dimension, finish, cure, protect, clean, and similar operations at Project site.

H. "Provide": Furnish and install, complete and ready for the intended use.

I. "Project Site": Space available for performing construction activities. The extent of Project site is shown on Drawings and may or may not be identical with the description of the land on which Project is to be built.

1.3 INDUSTRY STANDARDS

A. Applicability of Standards: Unless the Contract Documents include more stringent requirements, applicable construction industry standards have the same force and effect as if bound or copied directly into the Contract Documents to the extent referenced. Such standards are made a part of the Contract Documents by reference.

B. Publication Dates: Comply with standards in effect as of date of the Contract Documents unless otherwise indicated.

C. Copies of Standards: Each entity engaged in construction on Project should be familiar with industry standards applicable to its construction activity. Copies of applicable standards are not bound with the Contract Documents.

1. Where copies of standards are needed to perform a required construction activity, obtain copies directly from publication source.

1.4 ABBREVIATIONS AND ACRONYMS

A. Industry Organizations: Where abbreviations and acronyms are used in Specifications or other Contract Documents, they shall mean the recognized name of the entities indicated in Gale's "Encyclopedia of Associations: National Organizations of the U.S." or in Columbia Books' "National Trade & Professional Associations of the United States."

B. Industry Organizations: Where abbreviations and acronyms are used in Specifications or other Contract Documents, they shall mean the recognized name of the entities in the following list. Abbreviations and acronyms not included in this list shall mean the recognized name of the entities indicated in Gale's "Encyclopedia of Associations: National Organizations of the U.S." or in Columbia Books' "National Trade & Professional Associations of the United States." The information in this list is subject to change and is believed to be accurate as of the date of the Contract Documents.

1. AABC - Associated Air Balance Council; www.aabc.com.
2. AAMA - American Architectural Manufacturers Association; www.aamanet.org.
3. AAPFCO - Association of American Plant Food Control Officials; www.aapfco.org.
4. AASHTO - American Association of State Highway and Transportation Officials; www.transportation.org.
5. AATCC - American Association of Textile Chemists and Colorists; www.aatcc.org.
6. ABMA - American Bearing Manufacturers Association; www.americanbearings.org.
7. ABMA - American Boiler Manufacturers Association; www.abma.com.
8. ACI - American Concrete Institute; (Formerly: ACI International); www.concrete.org.
9. ACPA - American Concrete Pipe Association; www.concrete-pipe.org.
10. AEIC - Association of Edison Illuminating Companies, Inc. (The); www.aeic.org.
11. AF&PA - American Forest & Paper Association; www.afandpa.org.
12. AGA - American Gas Association; www.aga.org.
13. AHAM - Association of Home Appliance Manufacturers; www.aham.org.
14. AHRI - Air-Conditioning, Heating, and Refrigeration Institute (The); www.ahrinet.org.
15. AI - Asphalt Institute; www.asphaltinstitute.org.

16. AIA - American Institute of Architects (The); www.aia.org.
17. AISC - American Institute of Steel Construction; www.aisc.org.
18. AISI - American Iron and Steel Institute; www.steel.org.
19. AITC - American Institute of Timber Construction; www.aitc-glulam.org.
20. AMCA - Air Movement and Control Association International, Inc.; www.amca.org.
21. ANSI - American National Standards Institute; www.ansi.org.
22. AOSA - Association of Official Seed Analysts, Inc.; www.aosaseed.com.
23. APA - APA - The Engineered Wood Association; www.apawood.org.
24. APA - Architectural Precast Association; www.archprecast.org.
25. API - American Petroleum Institute; www.api.org.
26. ARI - Air-Conditioning & Refrigeration Institute; (See AHRI).
27. ARI - American Refrigeration Institute; (See AHRI).
28. ARMA - Asphalt Roofing Manufacturers Association; www.asphaltroofing.org.
29. ASCE - American Society of Civil Engineers; www.asce.org.
30. ASCE/SEI - American Society of Civil Engineers/Structural Engineering Institute; (See ASCE).
31. ASHRAE - American Society of Heating, Refrigerating and Air-Conditioning Engineers; www.ashrae.org.
32. ASME - ASME International; (American Society of Mechanical Engineers); www.asme.org.
33. ASSE - American Society of Safety Engineers (The); www.asse.org.
34. ASSE - American Society of Sanitary Engineering; www.asse-plumbing.org.
35. ASTM - ASTM International; www.astm.org.
36. ATIS - Alliance for Telecommunications Industry Solutions; www.atis.org.
37. AWEA - American Wind Energy Association; www.awea.org.
38. AWI - Architectural Woodwork Institute; www.awinet.org.
39. AWMAC - Architectural Woodwork Manufacturers Association of Canada; www.awmac.com.
40. AWPA - American Wood Protection Association; www.awpa.com.
41. AWS - American Welding Society; www.aws.org.
42. AWWA - American Water Works Association; www.awwa.org.
43. BHMA - Builders Hardware Manufacturers Association; www.buildershardware.com.
44. BIA - Brick Industry Association (The); www.gobrick.com.
45. BICSI - BICSI, Inc.; www.bicsi.org.
46. BIFMA - BIFMA International; (Business and Institutional Furniture Manufacturer's Association); www.bifma.org.
47. BISSC - Baking Industry Sanitation Standards Committee; www.bissc.org.
48. BWF - Badminton World Federation; (Formerly: International Badminton Federation); www.bissc.org.
49. CDA - Copper Development Association; www.copper.org.
50. CE - Conformite Europeenne; http://ec.europa.eu/growth/single-market/ce-marking/.
51. CEA - Canadian Electricity Association; www.electricity.ca.
52. CEA - Consumer Electronics Association; www.ce.org.
53. CFFA - Chemical Fabrics and Film Association, Inc.; www.chemicalfabricsandfilm.com.
54. CFSEI - Cold-Formed Steel Engineers Institute; www.cfsei.org.
55. CGA - Compressed Gas Association; www.cganet.com.
56. CIMA - Cellulose Insulation Manufacturers Association; www.cellulose.org.
57. CISCA - Ceilings & Interior Systems Construction Association; www.cisca.org.

58. CISPI - Cast Iron Soil Pipe Institute; www.cispi.org.
59. CLFMI - Chain Link Fence Manufacturers Institute; www.chainlinkinfo.org.
60. CPA - Composite Panel Association; www.pbmdf.com.
61. CRI - Carpet and Rug Institute (The); www.carpet-rug.org.
62. CRRC - Cool Roof Rating Council; www.coolroofs.org.
63. CRSI - Concrete Reinforcing Steel Institute; www.crsi.org.
64. CSA - CSA Group; www.csagroup.com.
65. CSA - CSA International; www.csa-international.org.
66. CSI - Construction Specifications Institute (The); www.csinet.org.
67. CSSB - Cedar Shake & Shingle Bureau; www.cedarbureau.org.
68. CTI - Cooling Technology Institute; (Formerly: Cooling Tower Institute); www.cti.org.
69. CWC - Composite Wood Council; (See CPA).
70. DASMA - Door and Access Systems Manufacturers Association; www.dasma.com.
71. DHI - Door and Hardware Institute; www.dhi.org.
72. ECA - Electronic Components Association; (See ECIA).
73. ECAMA - Electronic Components Assemblies & Materials Association; (See ECIA).
74. ECIA - Electronic Components Industry Association; www.eciaonline.org.
75. EIA - Electronic Industries Alliance; (See TIA).
76. EIMA - EIFS Industry Members Association; www.eima.com.
77. EJMA - Expansion Joint Manufacturers Association, Inc.; www.ejma.org.
78. ESD - ESD Association; (Electrostatic Discharge Association); www.esda.org.
79. ESTA - Entertainment Services and Technology Association; (See PLASA).
80. ETL - Intertek (See Intertek); www.intertek.com.
81. EVO - Efficiency Valuation Organization; www.evo-world.org.
82. FCI - Fluid Controls Institute; www.fluidcontrolsinstitute.org.
83. FIBA - Federation Internationale de Basketball; (The International Basketball Federation); www.fiba.com.
84. FIVB - Federation Internationale de Volleyball; (The International Volleyball Federation); www.fivb.org.
85. FM Approvals - FM Approvals LLC; www.fmglobal.com.
86. FM Global - FM Global; (Formerly: FMG - FM Global); www.fmglobal.com.
87. FRSA - Florida Roofing, Sheet Metal & Air Conditioning Contractors Association, Inc.; www.floridaroof.com.
88. FSA - Fluid Sealing Association; www.fluidsealing.com.
89. FSC - Forest Stewardship Council U.S.; www.fscus.org.
90. GA - Gypsum Association; www.gypsum.org.
91. GANA - Glass Association of North America; www.glasswebsite.com.
92. GS - Green Seal; www.greenseal.org.
93. HI - Hydraulic Institute; www.pumps.org.
94. HI/GAMA - Hydronics Institute/Gas Appliance Manufacturers Association; (See AHRI).
95. HMMA - Hollow Metal Manufacturers Association; (See NAAMM).
96. HPVA - Hardwood Plywood & Veneer Association; www.hpva.org.
97. HPW - H. P. White Laboratory, Inc.; www.hpwhite.com.
98. IAPSC - International Association of Professional Security Consultants; www.iapsc.org.
99. IAS - International Accreditation Service; www.iasonline.org.
100. ICBO - International Conference of Building Officials; (See ICC).
101. ICC - International Code Council; www.iccsafe.org.
102. ICEA - Insulated Cable Engineers Association, Inc.; www.icea.net.

103. ICPA - International Cast Polymer Alliance; www.icpa-hq.org.
104. ICRI - International Concrete Repair Institute, Inc.; www.icri.org.
105. IEC - International Electrotechnical Commission; www.iec.ch.
106. IEEE - Institute of Electrical and Electronics Engineers, Inc. (The); www.ieee.org.
107. IES - Illuminating Engineering Society; (Formerly: Illuminating Engineering Society of North America); www.ies.org.
108. IESNA - Illuminating Engineering Society of North America; (See IES).
109. IEST - Institute of Environmental Sciences and Technology; www.iest.org.
110. IGMA - Insulating Glass Manufacturers Alliance; www.igmaonline.org.
111. IGSHPA - International Ground Source Heat Pump Association; www.igshpa.okstate.edu.
112. ILI - Indiana Limestone Institute of America, Inc.; www.iliai.com.
113. Intertek - Intertek Group; (Formerly: ETL SEMCO; Intertek Testing Service NA); www.intertek.com.
114. ISA - International Society of Automation (The); (Formerly: Instrumentation, Systems, and Automation Society); www.isa.org.
115. ISAS - Instrumentation, Systems, and Automation Society (The); (See ISA).
116. ISFA - International Surface Fabricators Association; (Formerly: International Solid Surface Fabricators Association); www.isfanow.org.
117. ISO - International Organization for Standardization; www.iso.org.
118. ISSFA - International Solid Surface Fabricators Association; (See ISFA).
119. ITU - International Telecommunication Union; www.itu.int/home.
120. KCMA - Kitchen Cabinet Manufacturers Association; www.kcma.org.
121. LMA - Laminating Materials Association; (See CPA).
122. LPI - Lightning Protection Institute; www.lightning.org.
123. MBMA - Metal Building Manufacturers Association; www.mbma.com.
124. MCA - Metal Construction Association; www.metalconstruction.org.
125. MFMA - Maple Flooring Manufacturers Association, Inc.; www.maplefloor.org.
126. MFMA - Metal Framing Manufacturers Association, Inc.; www.metalframingmfg.org.
127. MHIA - Material Handling Industry of America; www.mhia.org.
128. MIA - Marble Institute of America; www.marble-institute.com.
129. MMPA - Moulding & Millwork Producers Association; www.wmmpa.com.
130. MPI - Master Painters Institute; www.paintinfo.com.
131. MSS - Manufacturers Standardization Society of The Valve and Fittings Industry Inc.; www.mss-hq.org.
132. NAAMM - National Association of Architectural Metal Manufacturers; www.naamm.org.
133. NACE - NACE International; (National Association of Corrosion Engineers International); www.nace.org.
134. NADCA - National Air Duct Cleaners Association; www.nadca.com.
135. NAIMA - North American Insulation Manufacturers Association; www.naima.org.
136. NBGQA - National Building Granite Quarries Association, Inc.; www.nbgqa.com.
137. NBI - New Buildings Institute; www.newbuildings.org.
138. NCAA - National Collegiate Athletic Association (The); www.ncaa.org.
139. NCMA - National Concrete Masonry Association; www.ncma.org.
140. NEBB - National Environmental Balancing Bureau; www.nebb.org.
141. NECA - National Electrical Contractors Association; www.necanet.org.
142. NeLMA - Northeastern Lumber Manufacturers Association; www.nelma.org.

143. NEMA - National Electrical Manufacturers Association; www.nema.org.
144. NETA - InterNational Electrical Testing Association; www.netaworld.org.
145. NFHS - National Federation of State High School Associations; www.nfhs.org.
146. NFPA - National Fire Protection Association; www.nfpa.org.
147. NFPA - NFPA International; (See NFPA).
148. NFRC - National Fenestration Rating Council; www.nfrc.org.
149. NHLA - National Hardwood Lumber Association; www.nhla.com.
150. NLGA - National Lumber Grades Authority; www.nlga.org.
151. NOFMA - National Oak Flooring Manufacturers Association; (See NWFA).
152. NOMMA - National Ornamental & Miscellaneous Metals Association; www.nomma.org.
153. NRCA - National Roofing Contractors Association; www.nrca.net.
154. NRMCA - National Ready Mixed Concrete Association; www.nrmca.org.
155. NSF - NSF International; www.nsf.org.
156. NSPE - National Society of Professional Engineers; www.nspe.org.
157. NSSGA - National Stone, Sand & Gravel Association; www.nssga.org.
158. NTMA - National Terrazzo & Mosaic Association, Inc. (The); www.ntma.com.
159. NWFA - National Wood Flooring Association; www.nwfa.org.
160. PCI - Precast/Prestressed Concrete Institute; www.pci.org.
161. PDI - Plumbing & Drainage Institute; www.pdionline.org.
162. PLASA - PLASA; (Formerly: ESTA - Entertainment Services and Technology Association); www.plasa.org.
163. RCSC - Research Council on Structural Connections; www.boltcouncil.org.
164. RFCI - Resilient Floor Covering Institute; www.rfci.com.
165. RIS - Redwood Inspection Service; www.redwoodinspection.com.
166. SAE - SAE International; www.sae.org.
167. SCTE - Society of Cable Telecommunications Engineers; www.scte.org.
168. SDI - Steel Deck Institute; www.sdi.org.
169. SDI - Steel Door Institute; www.steeldoor.org.
170. SEFA - Scientific Equipment and Furniture Association (The); www.sefalabs.com.
171. SEI/ASCE - Structural Engineering Institute/American Society of Civil Engineers; (See ASCE).
172. SIA - Security Industry Association; www.siaonline.org.
173. SJI - Steel Joist Institute; www.steeljoist.org.
174. SMA - Screen Manufacturers Association; www.smainfo.org.
175. SMACNA - Sheet Metal and Air Conditioning Contractors' National Association; www.smacna.org.
176. SMPTE - Society of Motion Picture and Television Engineers; www.smpte.org.
177. SPFA - Spray Polyurethane Foam Alliance; www.sprayfoam.org.
178. SPIB - Southern Pine Inspection Bureau; www.spib.org.
179. SPRI - Single Ply Roofing Industry; www.spri.org.
180. SRCC - Solar Rating & Certification Corporation; www.solar-rating.org.
181. SSINA - Specialty Steel Industry of North America; www.ssina.com.
182. SSPC - SSPC: The Society for Protective Coatings; www.sspc.org.
183. STI - Steel Tank Institute; www.steeltank.com.
184. SWI - Steel Window Institute; www.steelwindows.com.
185. SWPA - Submersible Wastewater Pump Association; www.swpa.org.
186. TCA - Tilt-Up Concrete Association; www.tilt-up.org.
187. TCNA - Tile Council of North America, Inc.; www.tileusa.com.

188. TEMA - Tubular Exchanger Manufacturers Association, Inc.; www.tema.org.
189. TIA - Telecommunications Industry Association (The); (Formerly: TIA/EIA - Telecommunications Industry Association/Electronic Industries Alliance); www.tiaonline.org.
190. TIA/EIA - Telecommunications Industry Association/Electronic Industries Alliance; (See TIA).
191. TMS - The Masonry Society; www.masonrysociety.org.
192. TPI - Truss Plate Institute; www.tpinst.org.
193. TPI - Turfgrass Producers International; www.turfgrasssod.org.
194. TRI - Tile Roofing Institute; www.tileroofing.org.
195. UL - Underwriters Laboratories Inc.; www.ul.com.
196. UNI - Uni-Bell PVC Pipe Association; www.uni-bell.org.
197. USAV - USA Volleyball; www.usavolleyball.org.
198. USGBC - U.S. Green Building Council; www.usgbc.org.
199. USITT - United States Institute for Theatre Technology, Inc.; www.usitt.org.
200. WA - Wallcoverings Association; www.wallcoverings.org.
201. WASTEC - Waste Equipment Technology Association; www.wastec.org.
202. WCLIB - West Coast Lumber Inspection Bureau; www.wclib.org.
203. WCMA - Window Covering Manufacturers Association; www.wcmanet.org.
204. WDMA - Window & Door Manufacturers Association; www.wdma.com.
205. WI - Woodwork Institute; www.wicnet.org.
206. WSRCA - Western States Roofing Contractors Association; www.wsrca.com.
207. WWPA - Western Wood Products Association; www.wwpa.org.

C. Code Agencies: Where abbreviations and acronyms are used in Specifications or other Contract Documents, they shall mean the recognized name of the entities in the following list. This information is believed to be accurate as of the date of the Contract Documents.

1. DIN - Deutsches Institut fur Normung e.V.; www.din.de.
2. IAPMO - International Association of Plumbing and Mechanical Officials; www.iapmo.org.
3. ICC - International Code Council; www.iccsafe.org.
4. ICC-ES - ICC Evaluation Service, LLC; www.icc-es.org.

D. Federal Government Agencies: Where abbreviations and acronyms are used in Specifications or other Contract Documents, they shall mean the recognized name of the entities in the following list. Information is subject to change and is up to date as of the date of the Contract Documents.

1. COE - Army Corps of Engineers; www.usace.army.mil.
2. CPSC - Consumer Product Safety Commission; www.cpsc.gov.
3. DOC - Department of Commerce; National Institute of Standards and Technology; www.nist.gov.
4. DOD - Department of Defense; www.quicksearch.dla.mil.
5. DOE - Department of Energy; www.energy.gov.
6. EPA - Environmental Protection Agency; www.epa.gov.
7. FAA - Federal Aviation Administration; www.faa.gov.
8. FG - Federal Government Publications; www.gpo.gov/fdsys.
9. GSA - General Services Administration; www.gsa.gov.

10. HUD - Department of Housing and Urban Development; www.hud.gov.
11. LBL - Lawrence Berkeley National Laboratory; Environmental Energy Technologies Division; www.eetd.lbl.gov.
12. OSHA - Occupational Safety & Health Administration; www.osha.gov.
13. SD - Department of State; www.state.gov.
14. TRB - Transportation Research Board; National Cooperative Highway Research Program; The National Academies; www.trb.org.
15. USDA - Department of Agriculture; Agriculture Research Service; U.S. Salinity Laboratory; www.ars.usda.gov.
16. USDA - Department of Agriculture; Rural Utilities Service; www.usda.gov.
17. USDOJ - Department of Justice; Office of Justice Programs; National Institute of Justice; www.ojp.usdoj.gov.
18. USP - U.S. Pharmacopeial Convention; www.usp.org.
19. USPS - United States Postal Service; www.usps.com.

E. Standards and Regulations: Where abbreviations and acronyms are used in Specifications or other Contract Documents, they shall mean the recognized name of the standards and regulations in the following list. This information is subject to change and is believed to be accurate as of the date of the Contract Documents.

1. CFR - Code of Federal Regulations; Available from Government Printing Office; www.gpo.gov/fdsys.
2. DOD - Department of Defense; Military Specifications and Standards; Available from DLA Document Services; www.quicksearch.dla.mil.
3. DSCC - Defense Supply Center Columbus; (See FS).
4. FED-STD - Federal Standard; (See FS).
5. FS - Federal Specification; Available from DLA Document Services; www.quicksearch.dla.mil.

    a. Available from Defense Standardization Program; www.dsp.dla.mil.
    b. Available from General Services Administration; www.gsa.gov.
    c. Available from National Institute of Building Sciences/Whole Building Design Guide; www.wbdg.org.

6. MILSPEC - Military Specification and Standards; (See DOD).
7. USAB - United States Access Board; www.access-board.gov.
8. USATBCB - U.S. Architectural & Transportation Barriers Compliance Board; (See USAB).

F. State Government Agencies: Where abbreviations and acronyms are used in Specifications or other Contract Documents, they shall mean the recognized name of the entities in the following list. This information is subject to change and is believed to be accurate as of the date of the Contract Documents.

1. CBHF; State of California; Department of Consumer Affairs; Bureau of Electronic and Appliance Repair, Home Furnishings and Thermal Insulation; www.bearhfti.ca.gov.
2. CCR; California Code of Regulations; Office of Administrative Law; California Title 24 Energy Code; www.calregs.com.
3. CDHS; California Department of Health Services; (See CDPH).

4. CDPH; California Department of Public Health; Indoor Air Quality Program; www.cal-iaq.org.
5. CPUC; California Public Utilities Commission; www.cpuc.ca.gov.
6. SCAQMD; South Coast Air Quality Management District; www.aqmd.gov.
7. TFS; Texas A&M Forest Service; Sustainable Forestry and Economic Development; www.txforestservice.tamu.edu.

PART 2 - PRODUCTS (Not Used)

PART 3 - EXECUTION (Not Used)

END OF SECTION 01 4200

SECTION 01 6000 - PRODUCT REQUIREMENTS

PART 1 - GENERAL

1.1 RELATED DOCUMENTS

A. Drawings and general provisions of the Contract, including General and Supplementary Conditions and other Division 01 Specification Sections, apply to this Section.

1.2 SUMMARY

A. Section includes administrative and procedural requirements for selection of products for use in Project; product delivery, storage, and handling; manufacturers' standard warranties on products; special warranties; and comparable products.

B. Related Requirements:

1. Section 01 2500 "Substitution Procedures" for requests for substitutions.
2. Section 01 4200 "References" for applicable industry standards for products specified.

1.3 DEFINITIONS

A. Products: Items obtained for incorporating into the Work, whether purchased for Project or taken from previously purchased stock. The term "product" includes the terms "material," "equipment," "system," and terms of similar intent.

1. Named Products: Items identified by manufacturer's product name, including make or model number or other designation shown or listed in manufacturer's published product literature that is current as of date of the Contract Documents.
2. New Products: Items that have not previously been incorporated into another project or facility. Products salvaged or recycled from other projects are not considered new products.
3. Comparable Product: Product that is demonstrated and approved by Architect through submittal process to have the indicated qualities related to type, function, dimension, in-service performance, physical properties, appearance, and other characteristics that equal or exceed those of specified product.

B. Basis-of-Design Product Specification: A specification in which a single manufacturer's product is named and accompanied by the words "basis-of-design product," including make or model number or other designation. In addition to the basis-of-design product description, product attributes and characteristics may be listed to establish the significant qualities related to type, function, in-service performance and physical properties, weight, dimension, durability, visual characteristics, and other special features and requirements for purposes of evaluating comparable products of additional manufacturers named in the specification.

C. Subject to Compliance with Requirements: Where the phrase "Subject to compliance with requirements" introduces a product selection procedure in an individual Specification Section, provide products qualified under the specified product procedure. In the event that a named product or product by a named manufacturer does not meet the other requirements of the specifications, select another named product or product from another named manufacturer that does meet the requirements of the specifications. Submit a comparable product request, if applicable.

1.4 ACTION SUBMITTALS

A. Comparable Product Request Submittal: Submit request for consideration of each comparable product. Identify basis-of-design product or fabrication or installation method to be replaced. Include Specification Section number and title and Drawing numbers and titles.

1. Include data to indicate compliance with the requirements specified in "Comparable Products" Article.
2. Architect's Action: If necessary, Architect will request additional information or documentation for evaluation within seven days of receipt of a comparable product request. Architect will notify Contractor of approval or rejection of proposed comparable product request within 15 days of receipt of request, or seven days of receipt of additional information or documentation, whichever is later.

    a. Form of Architect's Approval of Submittal: As specified in Section 01 3300 "Submittal Procedures."
    b. Use product specified if Architect does not issue a decision on use of a comparable product request within time allocated.

B. Basis-of-Design Product Specification Submittal: Comply with requirements in Section 01 3300 "Submittal Procedures." Show compliance with requirements.

1.5 QUALITY ASSURANCE

A. Compatibility of Options: If Contractor is given option of selecting between two or more products for use on Project, select product compatible with products previously selected, even if previously selected products were also options.

1. Each contractor is responsible for providing products and construction methods compatible with products and construction methods of other contractors.

2. If a dispute arises between contractors over concurrently selectable but incompatible products, Architect will determine which products shall be used.

B. Identification of Products: Except for required labels and operating data, do not attach or imprint manufacturer or product names or trademarks on exposed surfaces of products or equipment that will be exposed to view in occupied spaces or on the exterior.

1. Labels: Locate required product labels and stamps on a concealed surface, or, where required for observation following installation, on a visually accessible surface that is not conspicuous.
2. Equipment Nameplates: Provide a permanent nameplate on each item of service-connected or power-operated equipment. Locate on a visually accessible but inconspicuous surface. Include information essential for operation, including the following:

    a. Name of product and manufacturer.
    b. Model and serial number.
    c. Capacity.
    d. Speed.
    e. Ratings.

3. See individual identification sections in Divisions 21, 22, 23, and 26 for additional identification requirements.

1.6 PRODUCT DELIVERY, STORAGE, AND HANDLING

A. Deliver, store, and handle products using means and methods that will prevent damage, deterioration, and loss, including theft and vandalism. Comply with manufacturer's written instructions.

B. Delivery and Handling:

1. Schedule delivery to minimize long-term storage at Project site and to prevent overcrowding of construction spaces.
2. Coordinate delivery with installation time to ensure minimum holding time for items that are flammable, hazardous, easily damaged, or sensitive to deterioration, theft, and other losses.
3. Deliver products to Project site in an undamaged condition in manufacturer's original sealed container or other packaging system, complete with labels and instructions for handling, storing, unpacking, protecting, and installing.
4. Inspect products on delivery to determine compliance with the Contract Documents and to determine that products are undamaged and properly protected.

C. Storage:

1. Store products to allow for inspection and measurement of quantity or counting of units.
2. Store materials in a manner that will not endanger Project structure.

3. Store products that are subject to damage by the elements, under cover in a weathertight enclosure above ground, with ventilation adequate to prevent condensation.
4. Protect foam plastic from exposure to sunlight, except to extent necessary for period of installation and concealment.
5. Comply with product manufacturer's written instructions for temperature, humidity, ventilation, and weather-protection requirements for storage.
6. Protect stored products from damage and liquids from freezing.
7. Provide a secure location and enclosure at Project site for storage of materials and equipment by Owner's construction forces. Coordinate location with Owner.

1.7 PRODUCT WARRANTIES

A. Warranties specified in other Sections shall be in addition to, and run concurrent with, other warranties required by the Contract Documents. Manufacturer's disclaimers and limitations on product warranties do not relieve Contractor of obligations under requirements of the Contract Documents.

1. Manufacturer's Warranty: Written warranty furnished by individual manufacturer for a particular product and specifically endorsed by manufacturer to Owner.
2. Special Warranty: Written warranty required by the Contract Documents to provide specific rights for Owner.

B. Special Warranties: Prepare a written document that contains appropriate terms and identification, ready for execution.

1. Manufacturer's Standard Form: Modified to include Project-specific information and properly executed.
2. Specified Form: When specified forms are included with the Specifications, prepare a written document using indicated form properly executed.
3. See other Sections for specific content requirements and particular requirements for submitting special warranties.

C. Submittal Time: Comply with requirements in Section 01 7700 "Closeout Procedures."

PART 2 - PRODUCTS

2.1 PRODUCT SELECTION PROCEDURES

A. General Product Requirements: Provide products that comply with the Contract Documents, are undamaged and, unless otherwise indicated, are new at time of installation.

1. Provide products complete with accessories, trim, finish, fasteners, and other items needed for a complete installation and indicated use and effect.
2. Standard Products: If available, and unless custom products or nonstandard options are specified, provide standard products of types that have been produced and used successfully in similar situations on other projects.

3. Owner reserves the right to limit selection to products with warranties meeting requirements of the Contract Documents.
4. Where products are accompanied by the term "as selected," Architect will make selection.
5. Descriptive, performance, and reference standard requirements in the Specifications establish salient characteristics of products.

B. Product Selection Procedures:

1. Sole Manufacturer/Source: Where Specifications name a single manufacturer or source, provide a product by the named manufacturer or source that complies with requirements. Comparable products or substitutions for Contractor's convenience will not be considered.
2. Limited List of Manufacturers: Where Specifications include a list of manufacturers' names, provide a product by one of the manufacturers listed that complies with requirements. Comparable products or substitutions for Contractor's convenience will be considered within the first 60 days after Notice to Proceed unless otherwise indicated.
3. Basis-of-Design Product: Where Specifications name a product, or refer to a product indicated on Drawings, and include a list of manufacturers, provide the specified or indicated product or a comparable product by one of the other named manufacturers. Drawings and Specifications indicate sizes, profiles, dimensions, and other characteristics that are based on the product named. Comply with requirements in "Comparable Products" Article for consideration of an unnamed product by one of the other named manufacturers.

C. Visual Matching Specification: Where Specifications require "match Architect's sample," provide a product that complies with requirements and matches Architect's sample. Architect's decision will be final on whether a proposed product matches.

1. If no product available within specified category matches and complies with other specified requirements, comply with requirements in Section 01 2500 "Substitution Procedures" for proposal of product.

D. Visual Selection Specification: Where Specifications include the phrase "as selected by Architect from manufacturer's full range" or similar phrase, select a product that complies with requirements. Architect will select color, gloss, pattern, density, or texture from manufacturer's product line that includes both standard and premium items.

PART 3 - EXECUTION (Not Used)

END OF SECTION 01 6000

SECTION 01 7300 – EXECUTION

PART 1 - GENERAL

1.1 RELATED DOCUMENTS

A. Drawings and general provisions of the Contract, including General and Supplementary Conditions and other Division 01 Specification Sections, apply to this Section.

1.2 SUMMARY

A. Section includes general administrative and procedural requirements governing execution of the Work including, but not limited to, the following:

1. Construction layout.
2. Field engineering and surveying.
3. Installation of the Work.
4. Coordination of Owner-installed products.
5. Progress cleaning.
6. Starting and adjusting.
7. Protection of installed construction.

B. Related Requirements:

1. Section 01 1000 "Summary" for limits on use of Project site.
2. Section 01 3300 "Submittal Procedures" for submitting surveys.
3. Section 01 7700 "Closeout Procedures" for submitting final property survey with Project Record Documents, recording of Owner-accepted deviations from indicated lines and levels, replacing defective work, and final cleaning.

1.3 DEFINITIONS

A. Cutting: Removal of in-place construction necessary to permit installation or performance of subsequent work.

B. Patching: Fitting and repair work required to restore construction to original conditions after installation of subsequent work.

1.4 PREINSTALLATION MEETINGS

A. Cutting and Patching Conference: Conduct conference at Project site.

1. Prior to commencing work requiring cutting and patching, review extent of cutting and patching anticipated and examine procedures for ensuring satisfactory result from cutting and patching work. Require representatives of each entity directly concerned with cutting and patching to attend, including the following:

    a. Contractor's superintendent.
    b. Trade supervisor responsible for cutting operations.
    c. Trade supervisor(s) responsible for patching of each type of substrate.
    d. Mechanical, electrical, and utilities subcontractors' supervisors, to the extent each trade is affecting by cutting and patching operations.

2. Review areas of potential interference and conflict. Coordinate procedures and resolve potential conflicts before proceeding.

1.5 INFORMATIONAL SUBMITTALS

A. Qualification Data: For land surveyor.

B. Certificates: Submit certificate signed by land surveyor certifying that location and elevation of improvements comply with requirements.

C. Certified Surveys: Submit two copies signed by land surveyor.

D. Final Property Survey: Submit 10 copies showing the Work performed and record survey data.

1.6 QUALITY ASSURANCE

A. Land Surveyor Qualifications: A professional land surveyor who is legally qualified to practice in jurisdiction where Project is located and who is experienced in providing land-surveying services of the kind indicated.

B. Manufacturer's Installation Instructions: Obtain and maintain on-site manufacturer's written recommendations and instructions for installation of products and equipment.

PART 2 - PRODUCTS

2.1 MATERIALS

A. General: Comply with requirements specified in other Sections.

1. For projects requiring compliance with sustainable design and construction practices and procedures, use products for patching that comply with sustainable design requirements.

B. In-Place Materials: Use materials for patching identical to in-place materials. For exposed surfaces, use materials that visually match in-place adjacent surfaces to the fullest extent possible.

1. If identical materials are unavailable or cannot be used, use materials that, when installed, will provide a match acceptable to Architect for the visual and functional performance of in-place materials.

PART 3 - EXECUTION

3.1 EXAMINATION

A. Existing Conditions: The existence and location of underground and other utilities and construction indicated as existing are not guaranteed. Before beginning sitework, investigate and verify the existence and location of underground utilities, mechanical and electrical systems, and other construction affecting the Work.

1. Before construction, verify the location and invert elevation at points of connection of sanitary sewer, storm sewer, and water-service piping; underground electrical services; and other utilities.
2. Furnish location data for work related to Project that must be performed by public utilities serving Project site.

B. Examination and Acceptance of Conditions: Before proceeding with each component of the Work, examine substrates, areas, and conditions, with Installer or Applicator present where indicated, for compliance with requirements for installation tolerances and other conditions affecting performance. Record observations.

1. Examine roughing-in for mechanical and electrical systems to verify actual locations of connections before equipment and fixture installation.
2. Examine walls, floors, and roofs for suitable conditions where products and systems are to be installed.
3. Verify compatibility with and suitability of substrates, including compatibility with existing finishes or primers.

C. Written Report: Where a written report listing conditions detrimental to performance of the Work is required by other Sections, include the following:

1. Description of the Work.
2. List of detrimental conditions, including substrates.
3. List of unacceptable installation tolerances.
4. Recommended corrections.

D. Proceed with installation only after unsatisfactory conditions have been corrected. Proceeding with the Work indicates acceptance of surfaces and conditions.

3.2 PREPARATION

A. Existing Utility Information: Furnish information to local utility and Owner that is necessary to adjust, move, or relocate existing utility structures, utility poles, lines, services, or other utility appurtenances located in or affected by construction. Coordinate with authorities having jurisdiction.

B. Field Measurements: Take field measurements as required to fit the Work properly. Recheck measurements before installing each product. Where portions of the Work are indicated to fit to other construction, verify dimensions of other construction by field measurements before fabrication. Coordinate fabrication schedule with construction progress to avoid delaying the Work.

C. Space Requirements: Verify space requirements and dimensions of items shown diagrammatically on Drawings.

D. Review of Contract Documents and Field Conditions: Immediately on discovery of the need for clarification of the Contract Documents caused by differing field conditions outside the control of Contractor, submit a request for information to Architect according to requirements in Section 01 3100 "Project Management and Coordination."

3.3 CONSTRUCTION LAYOUT

A. Verification: Before proceeding to lay out the Work, verify layout information shown on Drawings, in relation to the property survey and existing benchmarks. If discrepancies are discovered, notify Architect promptly.

B. General: Engage a land surveyor to lay out the Work using accepted surveying practices.

1. Establish benchmarks and control points to set lines and levels at each story of construction and elsewhere as needed to locate each element of Project.
2. Establish limits on use of Project site.
3. Establish dimensions within tolerances indicated. Do not scale Drawings to obtain required dimensions.
4. Inform installers of lines and levels to which they must comply.
5. Check the location, level and plumb, of every major element as the Work progresses.
6. Notify Architect when deviations from required lines and levels exceed allowable tolerances.
7. Close site surveys with an error of closure equal to or less than the standard established by authorities having jurisdiction.

C. Site Improvements: Locate and lay out site improvements, including pavements, grading, fill and topsoil placement, utility slopes, and rim and invert elevations.

D. Building Lines and Levels: Locate and lay out control lines and levels for structures, building foundations, column grids, and floor levels, including those required for mechanical and electrical work. Transfer survey markings and elevations for use with control lines and levels. Level foundations and piers from two or more locations.

E. Record Log: Maintain a log of layout control work. Record deviations from required lines and levels. Include beginning and ending dates and times of surveys, weather conditions, name and duty of each survey party member, and types of instruments and tapes used. Make the log available for reference by Architect.

3.4 FIELD ENGINEERING

A. Identification: Owner will identify existing benchmarks, control points, and property corners.

B. Reference Points: Locate existing permanent benchmarks, control points, and similar reference points before beginning the Work. Preserve and protect permanent benchmarks and control points during construction operations.

1. Do not change or relocate existing benchmarks or control points without prior written approval of Architect. Report lost or destroyed permanent benchmarks or control points promptly. Report the need to relocate permanent benchmarks or control points to Architect before proceeding.
2. Replace lost or destroyed permanent benchmarks and control points promptly. Base replacements on the original survey control points.

C. Benchmarks: Establish and maintain a minimum of two permanent benchmarks on Project site, referenced to data established by survey control points. Comply with authorities having jurisdiction for type and size of benchmark.

1. Record benchmark locations, with horizontal and vertical data, on Project Record Documents.
2. Where the actual location or elevation of layout points cannot be marked, provide temporary reference points sufficient to locate the Work.
3. Remove temporary reference points when no longer needed. Restore marked construction to its original condition.

D. Certified Survey: On completion of foundation walls, major site improvements, and other work requiring field-engineering services, prepare a certified survey showing dimensions, locations, angles, and elevations of construction and sitework.

E. Final Property Survey: Engage a land surveyor to prepare a final property survey showing significant features (real property) for Project. Include on the survey a certification, signed by land surveyor, that principal metes, bounds, lines, and levels of Project are accurately positioned as shown on the survey.

1. Show boundary lines, monuments, streets, site improvements and utilities, existing improvements and significant vegetation, adjoining properties, acreage, grade contours, and the distance and bearing from a site corner to a legal point.
2. Recording: At Substantial Completion, have the final property survey recorded by or with authorities having jurisdiction as the official "property survey."

3.5 INSTALLATION

A. General: Locate the Work and components of the Work accurately, in correct alignment and elevation, as indicated.

1. Make vertical work plumb and make horizontal work level.
2. Where space is limited, install components to maximize space available for maintenance and ease of removal for replacement.
3. Conceal pipes, ducts, and wiring in finished areas unless otherwise indicated.
4. Maintain minimum headroom clearance of 96 inches in occupied spaces and 90 inches in unoccupied spaces.

B. Comply with manufacturer's written instructions and recommendations for installing products in applications indicated.

C. Install products at the time and under conditions that will ensure the best possible results. Maintain conditions required for product performance until Substantial Completion.

D. Conduct construction operations so no part of the Work is subjected to damaging operations or loading in excess of that expected during normal conditions of occupancy.

E. Sequence the Work and allow adequate clearances to accommodate movement of construction items on site and placement in permanent locations.

F. Tools and Equipment: Where possible, select tools or equipment that minimize production of excessive noise levels.

G. Templates: Obtain and distribute to the parties involved templates for work specified to be factory prepared and field installed. Check Shop Drawings of other portions of the Work to confirm that adequate provisions are made for locating and installing products to comply with indicated requirements.

H. Attachment: Provide blocking and attachment plates and anchors and fasteners of adequate size and number to securely anchor each component in place, accurately located and aligned with other portions of the Work. Where size and type of attachments are not indicated, verify size and type required for load conditions.

1. Mounting Heights: Where mounting heights are not indicated, mount components at heights directed by Architect.
2. Allow for building movement, including thermal expansion and contraction.
3. Coordinate installation of anchorages. Furnish setting drawings, templates, and directions for installing anchorages, including sleeves, concrete inserts, anchor bolts, and items with integral anchors, that are to be embedded in concrete or masonry. Deliver such items to Project site in time for installation.

I. Joints: Make joints of uniform width. Where joint locations in exposed work are not indicated, arrange joints for the best visual effect. Fit exposed connections together to form hairline joints.

J. Repair or remove and replace damaged, defective, or nonconforming Work.

1. Comply with Section 01 7700 "Closeout Procedures" for repairing or removing and replacing defective Work.

3.6 OWNER-INSTALLED PRODUCTS

A. Site Access: Provide access to Project site for Owner's construction personnel.

B. Coordination: Coordinate construction and operations of the Work with work performed by Owner's construction personnel.

1. Construction Schedule: Inform Owner of Contractor's preferred construction schedule for Owner's portion of the Work. Adjust construction schedule based on a mutually agreeable timetable. Notify Owner if changes to schedule are required due to differences in actual construction progress.
2. Preinstallation Conferences: Include Owner's construction personnel at preinstallation conferences covering portions of the Work that are to receive Owner's work. Attend preinstallation conferences conducted by Owner's construction personnel if portions of the Work depend on Owner's construction.

3.7 PROGRESS CLEANING

A. General: Clean Project site and work areas daily, including common areas. Enforce requirements strictly. Dispose of materials lawfully.

1. Comply with requirements in NFPA 241 for removal of combustible waste materials and debris.
2. Do not hold waste materials more than seven days during normal weather or three days if the temperature is expected to rise above 80 deg F.
3. Containerize hazardous and unsanitary waste materials separately from other waste. Mark containers appropriately and dispose of legally, according to regulations.

    a. Use containers intended for holding waste materials of type to be stored.

4. Coordinate progress cleaning for joint-use areas where Contractor and other contractors are working concurrently.

B. Site: Maintain Project site free of waste materials and debris.

C. Work Areas: Clean areas where work is in progress to the level of cleanliness necessary for proper execution of the Work.

1. Remove liquid spills promptly.
2. Where dust would impair proper execution of the Work, broom-clean or vacuum the entire work area, as appropriate.

D. Installed Work: Keep installed work clean. Clean installed surfaces according to written instructions of manufacturer or fabricator of product installed, using only cleaning materials specifically recommended. If specific cleaning materials are not recommended, use cleaning materials that are not hazardous to health or property and that will not damage exposed surfaces.

E. Concealed Spaces: Remove debris from concealed spaces before enclosing the space.

F. Exposed Surfaces in Finished Areas: Clean exposed surfaces and protect as necessary to ensure freedom from damage and deterioration at time of Substantial Completion.

G. Waste Disposal: Do not bury or burn waste materials on-site. Do not wash waste materials down sewers or into waterways. Comply with waste disposal requirements in Section 01 7419 "Construction Waste Management and Disposal."

H. During handling and installation, clean and protect construction in progress and adjoining materials already in place. Apply protective covering where required to ensure protection from damage or deterioration at Substantial Completion.

I. Clean and provide maintenance on completed construction as frequently as necessary through the remainder of the construction period. Adjust and lubricate operable components to ensure operability without damaging effects.

J. Limiting Exposures: Supervise construction operations to ensure that no part of the construction, completed or in progress, is subject to harmful, dangerous, damaging, or otherwise deleterious exposure during the construction period.

3.8 STARTING AND ADJUSTING

A. Start equipment and operating components to confirm proper operation. Remove malfunctioning units, replace with new units, and retest.

B. Adjust equipment for proper operation. Adjust operating components for proper operation without binding.

C. Test each piece of equipment to verify proper operation. Test and adjust controls and safeties. Replace damaged and malfunctioning controls and equipment.

D. Manufacturer's Field Service: Comply with qualification requirements in Section 01 4000 "Quality Requirements."

3.9 PROTECTION OF INSTALLED CONSTRUCTION

A. Provide final protection and maintain conditions that ensure installed Work is without damage or deterioration at time of Substantial Completion.

B. Protection of Existing Items: Provide protection and ensure that existing items to remain undisturbed by construction are maintained in condition that existed at commencement of the Work.

C. Comply with manufacturer's written instructions for temperature and relative humidity.

END OF SECTION 01 7300

SECTION 01 7700 - CLOSEOUT PROCEDURES

PART 1 - GENERAL

1.1 RELATED DOCUMENTS

A. Drawings and general provisions of the Contract, including General and Supplementary Conditions and other Division 01 Specification Sections, apply to this Section.

1.2 SUMMARY

A. Section includes administrative and procedural requirements for contract closeout, including, but not limited to, the following:

1. Substantial Completion procedures.
2. Final completion procedures.
3. Warranties.
4. Final cleaning.
5. Repair of the Work.

B. Related Requirements:

1. Section 01 3233 "Photographic Documentation" for submitting final completion construction photographic documentation.
2. Section 01 7823 "Operation and Maintenance Data" for additional operation and maintenance manual requirements.
3. Section 01 7839 "Project Record Documents" for submitting Record Drawings, Record Specifications, and Record Product Data.
4. Section 01 7900 "Demonstration and Training" for requirements to train the Owner's maintenance personnel to adjust, operate, and maintain products, equipment, and systems.

1.3 ACTION SUBMITTALS

A. Product Data: For each type of cleaning agent.

B. Contractor's List of Incomplete Items: Initial submittal at Substantial Completion.

C. Certified List of Incomplete Items: Final submittal at final completion.

1.4 CLOSEOUT SUBMITTALS

A. Certificates of Release: From authorities having jurisdiction.

B. Certificate of Insurance: For continuing coverage.

C. Field Report: For pest control inspection.

1.5 MAINTENANCE MATERIAL SUBMITTALS

A. Schedule of Maintenance Material Items: For maintenance material submittal items specified in other Sections.

1.6 SUBSTANTIAL COMPLETION PROCEDURES

A. Contractor's List of Incomplete Items: Prepare and submit a list of items to be completed and corrected (Contractor's punch list), indicating the value of each item on the list and reasons why the Work is incomplete.

B. Submittals Prior to Substantial Completion: Complete the following a minimum of 10 days prior to requesting inspection for determining date of Substantial Completion. List items below that are incomplete at time of request.

1. Certificates of Release: Obtain and submit releases from authorities having jurisdiction permitting Owner unrestricted use of the Work and access to services and utilities. Include occupancy permits, operating certificates, and similar releases.
2. Submit closeout submittals specified in other Division 01 Sections, including project record documents, operation and maintenance manuals, damage or settlement surveys, property surveys, and similar final record information.
3. Submit closeout submittals specified in individual Sections, including specific warranties, workmanship bonds, maintenance service agreements, final certifications, and similar documents.
4. Submit maintenance material submittals specified in individual Sections, including tools, spare parts, extra materials, and similar items, and deliver to location designated by Architect. Label with manufacturer's name and model number.

    a. Schedule of Maintenance Material Items: Prepare and submit schedule of maintenance material submittal items, including name and quantity of each item and name and number of related Specification Section. Obtain Architect's or Owner's signature for receipt of submittals.

5. Submit testing, adjusting, and balancing records.
6. Submit sustainable design submittals not previously submitted.
7. Submit changeover information related to Owner's occupancy, use, operation, and maintenance.

C. Procedures Prior to Substantial Completion: Complete the following a minimum of 10 days prior to requesting inspection for determining date of Substantial Completion. List items below that are incomplete at time of request.

1. Advise Owner of pending insurance changeover requirements.

2. Make final changeover of permanent locks and deliver keys to Owner. Advise Owner's personnel of changeover in security provisions.
3. Complete startup and testing of systems and equipment.
4. Perform preventive maintenance on equipment used prior to Substantial Completion.
5. Instruct Owner's personnel in operation, adjustment, and maintenance of products, equipment, and systems. Submit demonstration and training video recordings specified in Section 01 7900 "Demonstration and Training."
6. Advise Owner of changeover in utility services.
7. Participate with Owner in conducting inspection and walkthrough with local emergency responders.
8. Terminate and remove temporary facilities from Project site, along with mockups, construction tools, and similar elements.
9. Complete final cleaning requirements.
10. Touch up paint and otherwise repair and restore marred exposed finishes to eliminate visual defects.

D. Inspection: Submit a written request for inspection to determine Substantial Completion a minimum of 10 days prior to date the Work will be completed and ready for final inspection and tests. On receipt of request, Architect will either proceed with inspection or notify Contractor of unfulfilled requirements. Architect will prepare the Certificate of Substantial Completion after inspection or will notify Contractor of items, either on Contractor's list or additional items identified by Architect, that must be completed or corrected before certificate will be issued.

1. Request reinspection when the Work identified in previous inspections as incomplete is completed or corrected.
2. Results of completed inspection will form the basis of requirements for final completion.

1.7 FINAL COMPLETION PROCEDURES

A. Submittals Prior to Final Completion: Before requesting final inspection for determining final completion, complete the following:

1. Submit a final Application for Payment according to Section 01 2900 "Payment Procedures."
2. Certified List of Incomplete Items: Submit certified copy of Architect's Substantial Completion inspection list of items to be completed or corrected (punch list), endorsed and dated by Architect. Certified copy of the list shall state that each item has been completed or otherwise resolved for acceptance.
3. Certificate of Insurance: Submit evidence of final, continuing insurance coverage complying with insurance requirements.
4. Submit pest-control final inspection report.
5. Submit final completion photographic documentation.

B. Inspection: Submit a written request for final inspection to determine acceptance a minimum of 10 days prior to date the work will be completed and ready for final inspection and tests. On receipt of request, Architect will either proceed with inspection or notify Contractor of unfulfilled requirements. Architect will prepare a final Certificate for Payment after inspection or will notify Contractor of construction that must be completed or corrected before certificate will be issued.

1. Request reinspection when the Work identified in previous inspections as incomplete is completed or corrected.

1.8 LIST OF INCOMPLETE ITEMS (PUNCH LIST)

A. Organization of List: Include name and identification of each space and area affected by construction operations for incomplete items and items needing correction including, if necessary, areas disturbed by Contractor that are outside the limits of construction.

1. Organize list of spaces in sequential order, starting with exterior areas first and proceeding from lowest floor to highest floor.
2. Organize items applying to each space by major element, including categories for ceiling, individual walls, floors, equipment, and building systems.
3. Include the following information at the top of each page:

    a. Project name.
    b. Date.
    c. Name of Architect.
    d. Name of Contractor.
    e. Page number.

4. Submit list of incomplete items in the following format:

    a. MS Excel electronic file. Architect will return annotated file.
    b. PDF electronic file. Architect[, through Construction Manager,] will return annotated file.
    c. Web-based project software upload. Utilize software feature for creating and updating list of incomplete items (punch list).
    d. Three paper copies. Architect will return two copies.

1.9 SUBMITTAL OF PROJECT WARRANTIES

A. Time of Submittal: Submit written warranties on request of Architect for designated portions of the Work where warranties are indicated to commence on dates other than date of Substantial Completion, or when delay in submittal of warranties might limit Owner's rights under warranty.

B. Partial Occupancy: Submit properly executed warranties within 15 days of completion of designated portions of the Work that are completed and occupied or used by Owner during construction period by separate agreement with Contractor.

C. Organize warranty documents into an orderly sequence based on the table of contents of Project Manual.

D. Warranty Electronic File: Provide warranties and bonds in PDF format. Assemble complete warranty and bond submittal package into a single electronic PDF file with bookmarks enabling navigation to each item. Provide bookmarked table of contents at beginning of document.

1. Submit on digital media acceptable to Architect and by email to Architect.

E. Warranties in Paper Form:

1. Bind warranties and bonds in heavy-duty, three-ring, vinyl-covered, loose-leaf binders, thickness as necessary to accommodate contents, and sized to receive 8-1/2-by-11-inch paper.
2. Provide heavy paper dividers with plastic-covered tabs for each separate warranty. Mark tab to identify the product or installation. Provide a typed description of the product or installation, including the name of the product and the name, address, and telephone number of Installer.
3. Identify each binder on the front and spine with the typed or printed title "WARRANTIES," Project name, and name of Contractor.

F. Provide additional copies of each warranty to include in operation and maintenance manuals.

PART 2 - PRODUCTS

2.1 MATERIALS

A. Cleaning Agents: Use cleaning materials and agents recommended by manufacturer or fabricator of the surface to be cleaned. Do not use cleaning agents that are potentially hazardous to health or property or that might damage finished surfaces.

1. Use cleaning products that comply with Green Seal's GS-37, or if GS-37 is not applicable, use products that comply with the California Code of Regulations maximum allowable VOC levels.

PART 3 - EXECUTION

3.1 FINAL CLEANING

A. General: Perform final cleaning. Conduct cleaning and waste-removal operations to comply with local laws and ordinances and Federal and local environmental and antipollution regulations.

B. Cleaning: Employ experienced workers or professional cleaners for final cleaning. Clean each surface or unit to condition expected in an average commercial building cleaning and maintenance program. Comply with manufacturer's written instructions.

1. Complete the following cleaning operations before requesting inspection for certification of Substantial Completion for entire Project or for a designated portion of Project:

a. Clean Project site, yard, and grounds, in areas disturbed by construction activities, including landscape development areas, of rubbish, waste material, litter, and other foreign substances.
b. Sweep paved areas broom clean. Remove petrochemical spills, stains, and other foreign deposits.
c. Rake grounds that are not planted, mulched, or paved to a smooth, even-textured surface.
d. Remove tools, construction equipment, machinery, and surplus material from Project site.
e. Remove snow and ice to provide safe access to building.
f. Clean exposed exterior and interior hard-surfaced finishes to a dirt-free condition, free of stains, films, and similar foreign substances. Avoid disturbing natural weathering of exterior surfaces. Restore reflective surfaces to their original condition.
g. Remove debris and surface dust from limited access spaces, including roofs, plenums, shafts, trenches, equipment vaults, manholes, attics, and similar spaces.
h. Sweep concrete floors broom clean in unoccupied spaces.
i. Vacuum carpet and similar soft surfaces, removing debris and excess nap; clean according to manufacturer's recommendations if visible soil or stains remain.
j. Clean transparent materials, including mirrors and glass in doors and windows. Remove glazing compounds and other noticeable, vision-obscuring materials. Polish mirrors and glass, taking care not to scratch surfaces.
k. Remove labels that are not permanent.
l. Wipe surfaces of mechanical and electrical equipment, elevator equipment, and similar equipment. Remove excess lubrication, paint and mortar droppings, and other foreign substances.
m. Clean plumbing fixtures to a sanitary condition, free of stains, including stains resulting from water exposure.
n. Replace disposable air filters and clean permanent air filters. Clean exposed surfaces of diffusers, registers, and grills.
o. Clean ducts, blowers, and coils if units were operated without filters during construction or that display contamination with particulate matter on inspection.

1) Clean HVAC system in compliance with NADCA ACR. and Section 23 0130.52 "Existing HVAC Air-Distribution System Cleaning." Provide written report on completion of cleaning.

p. Clean luminaires, lamps, globes, and reflectors to function with full efficiency.
q. Leave Project clean and ready for occupancy.

C. Pest Control: Comply with pest control requirements in Section 01 5000 "Temporary Facilities and Controls." Prepare written report.

D. Construction Waste Disposal: Comply with waste disposal requirements in Section 01 7419 "Construction Waste Management and Disposal."

3.2 REPAIR OF THE WORK

A. Complete repair and restoration operations before requesting inspection for determination of Substantial Completion.

B. Repair, or remove and replace, defective construction. Repairing includes replacing defective parts, refinishing damaged surfaces, touching up with matching materials, and properly adjusting operating equipment. Where damaged or worn items cannot be repaired or restored, provide replacements. Remove and replace operating components that cannot be repaired. Restore damaged construction and permanent facilities used during construction to specified condition.

1. Remove and replace chipped, scratched, and broken glass, reflective surfaces, and other damaged transparent materials.
2. Touch up and otherwise repair and restore marred or exposed finishes and surfaces. Replace finishes and surfaces that that already show evidence of repair or restoration.

    a. Do not paint over "UL" and other required labels and identification, including mechanical and electrical nameplates. Remove paint applied to required labels and identification.

3. Replace parts subject to operating conditions during construction that may impede operation or reduce longevity.
4. Replace burned-out bulbs, bulbs noticeably dimmed by hours of use, and defective and noisy starters in fluorescent and mercury vapor fixtures to comply with requirements for new fixtures.

END OF SECTION 01 7700

SECTION 01 7701 - WARRANTIES AND BONDS

PART 1 - GENERAL

1.1 RELATED DOCUMENTS

A. Drawings and general provisions of the Contract, including General and Supplementary Conditions and other Division-1 Specification Sections, apply to this Section.

1.2 SUMMARY

A. This Section specifies general administrative and procedural requirements for warranties and bonds required by the Contract Documents, including manufacturer's standard warranties on products and special warranties.

1. Specific requirements for warranties for the Work, products, and installations that are specified to be warranted, are included in the individual Specification Sections of Divisions-2 through - 48.

B. Disclaimers and Limitations: Manufacturer's disclaimers and limitations on product warranties do not relieve the Contractor of the warranty on the Work that incorporates the products, nor does it relieve suppliers, manufacturers, and subcontractors required to countersign special warranties with the Contractor.

1.3 WARRANTY REQUIREMENTS

A. Provide written warranty for all Work under this section in addition to special warranties required in individual Specification Sections of Division 2 through 48 as required in the Owner's General Conditions of the Contract or the Supplemental General Conditions of the Contract.

B. If warranty requirements for all work under this contract are not stipulated in the Owner's General Conditions of the Contract or the Supplemental General Conditions of the Contract, provide minimum one-year warranty from Substantial Completion for all work under this Contract unless otherwise stipulated in individual Specification Sections in Division 2 through 48.

C. Related Damages and Losses: When correcting warranted Work that has failed, remove and replace other Work that has been damaged as a result of such failure or that must be removed and replaced to provide access for correction of warranted Work, at no cost to Owner.

D. Reinstatement of Warranty: When Work covered by a warranty has failed and been corrected by replacement or rebuilding, reinstate the warranty by written endorsement. The reinstated warranty shall be equal to the original warranty with an equitable adjustment for depreciation.

E. Replacement Cost: Upon determination that Work covered by a warranty has failed, replace or rebuild the Work to an acceptable condition complying with requirements of Contract Documents. The Contractor is responsible for the cost of replacing or rebuilding defective Work regardless of whether the Owner has benefitted from use of the Work through a portion of its anticipated useful service life.

F. Owner's Recourse: Written warranties made to the Owner are in addition to implied warranties, and shall not limit the duties, obligations, rights and remedies otherwise available under the law, nor shall warranty periods be interpreted as limitations on time in which the Owner can enforce such other duties, obligations, rights, or remedies.

1. Rejection of Warranties: The Owner reserves the right to reject warranties and to limit selections to products with warranties not in conflict with requirements of the Contract Documents.

G. The Owner reserves the right to refuse to accept Work for the Project where a special warranty, certification, or similar commitment is required on such Work or part of the Work, until evidence is presented that entities required to countersign such commitments are willing to do so.

1.4 SUBMITTALS

A. Submit written warranties to the Architect. If the Architect's Certificate of Substantial Completion designates a commencement date for warranties other than the date of Substantial Completion for the Work, or a designated portion of the Work upon request of the Architect, submit written warranties confirming this commencement date.

1. When a designated portion of the Work is completed and occupied or used by the Owner, by separate agreement with the Contractor during the construction period, submit properly executed warranties to the Architect within fifteen days of completion of that designated portion of the Work.

B. When a special warranty is required to be executed by the Contractor, or the Contractor and a subcontractor, supplier or manufacturer, prepare a written document that contains appropriate terms and identification, ready for execution by the required parties. Submit a draft to the Owner through the Architect for approval prior to final execution.

1. Refer to individual Sections of Divisions-2 through -48 for specific content requirements, and particular requirements for submittal of special warranties.

C. Form of Submittal: Compile two copies of each required warranty and bond properly executed by the Contractor, or by the Contractor, subcontractor, supplier, or manufacturer. Organize the warranty documents into an orderly sequence based on the table of contents of the Project Manual.

D. Bind warranties and bonds in heavy-duty, commercial quality, durable 3-ring vinyl covered loose-leaf binders, thickness as necessary to accommodate contents, and sized to receive 8- 1/2" by 11" paper.

1. Provide heavy paper dividers with celluloid covered tabs for each separate warranty. Mark the tab to identify the product or installation. Provide a typed description of the product or installation, including the name of the product, and the name, address and telephone number of the installer.

2. Identify each binder on the front and the spine with the typed or printed title "WARRANTIES AND BONDS, the Project title or name, and the name of the Contractor.

3. When operating and maintenance manuals are required for warranted construction, provide additional copies of each required warranty, as necessary, for inclusion in each required manual.

PART 2 - PRODUCTS (Not Applicable).

PART 3 - EXECUTION (Not Applicable).

END OF SECTION 01 7701

SECTION 01 7823 - OPERATION AND MAINTENANCE DATA

PART 1 - GENERAL

1.1 RELATED DOCUMENTS

A. Drawings and general provisions of the Contract, including General and Supplementary Conditions and other Division 01 Specification Sections, apply to this Section.

1.2 SUMMARY

A. Section includes administrative and procedural requirements for preparing operation and maintenance manuals, including the following:

1. Operation and maintenance documentation directory manuals.
2. Emergency manuals.
3. Systems and equipment operation manuals.
4. Systems and equipment maintenance manuals.
5. Product maintenance manuals.

B. Related Requirements:

1. Section 01 3300 "Submittal Procedures" for submitting copies of submittals for operation and maintenance manuals.

1.3 DEFINITIONS

A. System: An organized collection of parts, equipment, or subsystems united by regular interaction.

B. Subsystem: A portion of a system with characteristics similar to a system.

1.4 CLOSEOUT SUBMITTALS

A. Submit operation and maintenance manuals indicated. Provide content for each manual as specified in individual Specification Sections, and as reviewed and approved at the time of Section submittals. Submit reviewed manual content formatted and organized as required by this Section.

1. Architect and Commissioning Authority will comment on whether content of operation and maintenance submittals is acceptable.
2. Where applicable, clarify and update reviewed manual content to correspond to revisions and field conditions.

B. Format: Submit operation and maintenance manuals in the following format:

1. Submit on digital media acceptable to Architect. Enable reviewer comments on draft submittals.
2. Submit three paper copies. Architect will return two copies.

C. Initial Manual Submittal: Submit draft copy of each manual at least 30 days before commencing demonstration and training. Architect and Commissioning Authority will comment on whether general scope and content of manual are acceptable.

D. Final Manual Submittal: Submit each manual in final form prior to requesting inspection for Substantial Completion and at least 15 days before commencing demonstration and training. Architect and Commissioning Authority will return copy with comments.

1. Correct or revise each manual to comply with Architect's and Commissioning Authority's comments. Submit copies of each corrected manual within 15 days of receipt of Architect's and Commissioning Authority's comments and prior to commencing demonstration and training.

E. Comply with Section 01 7700 "Closeout Procedures" for schedule for submitting operation and maintenance documentation.

1.5 FORMAT OF OPERATION AND MAINTENANCE MANUALS

A. Manuals, Electronic Files: Submit manuals in the form of a multiple file composite electronic PDF file for each manual type required.

1. Electronic Files: Use electronic files prepared by manufacturer where available. Where scanning of paper documents is required, configure scanned file for minimum readable file size.
2. File Names and Bookmarks: Bookmark individual documents based on file names. Name document files to correspond to system, subsystem, and equipment names used in manual directory and table of contents. Group documents for each system and subsystem into individual composite bookmarked files, then create composite manual, so that resulting bookmarks reflect the system, subsystem, and equipment names in a readily navigated file tree. Configure electronic manual to display bookmark panel on opening file.

B. Manuals, Paper Copy: Submit manuals in the form of hard-copy, bound and labeled volumes.

1. Binders: Heavy-duty, three-ring, vinyl-covered, loose-leaf binders, in thickness necessary to accommodate contents, sized to hold 8-1/2-by-11-inch paper; with clear plastic sleeve on spine to hold label describing contents and with pockets inside covers to hold folded oversize sheets.

a. If two or more binders are necessary to accommodate data of a system, organize data in each binder into groupings by subsystem and related components. Cross-reference other binders if necessary to provide essential information for proper operation or maintenance of equipment or system.

b. Identify each binder on front and spine, with printed title "OPERATION AND MAINTENANCE MANUAL," Project title or name, and subject matter of contents, and indicate Specification Section number on bottom of spine. Indicate volume number for multiple-volume sets.

2. Dividers: Heavy-paper dividers with plastic-covered tabs for each section of the manual. Mark each tab to indicate contents. Include typed list of products and major components of equipment included in the section on each divider, cross-referenced to Specification Section number and title of Project Manual.
3. Protective Plastic Sleeves: Transparent plastic sleeves designed to enclose diagnostic software storage media for computerized electronic equipment. Enclose title pages and directories in clear plastic sleeves.
4. Supplementary Text: Prepared on 8-1/2-by-11-inch white bond paper.
5. Drawings: Attach reinforced, punched binder tabs on drawings and bind with text.

a. If oversize drawings are necessary, fold drawings to same size as text pages and use as foldouts.
b. If drawings are too large to be used as foldouts, fold and place drawings in labeled envelopes and bind envelopes in rear of manual. At appropriate locations in manual, insert typewritten pages indicating drawing titles, descriptions of contents, and drawing locations.

1.6 REQUIREMENTS FOR EMERGENCY, OPERATION, AND MAINTENANCE MANUALS

A. Organization of Manuals: Unless otherwise indicated, organize each manual into a separate section for each system and subsystem, and a separate section for each piece of equipment not part of a system. Each manual shall contain the following materials, in the order listed:

1. Title page.
2. Table of contents.
3. Manual contents.

B. Title Page: Include the following information:

1. Subject matter included in manual.
2. Name and address of Project.
3. Name and address of Owner.
4. Date of submittal.
5. Name and contact information for Contractor.
6. Name and contact information for Construction Manager.
7. Name and contact information for Architect.
8. Name and contact information for Commissioning Authority.
9. Names and contact information for major consultants to the Architect that designed the systems contained in the manuals.
10. Cross-reference to related systems in other operation and maintenance manuals.

C. Table of Contents: List each product included in manual, identified by product name, indexed to the content of the volume, and cross-referenced to Specification Section number in Project Manual.

1. If operation or maintenance documentation requires more than one volume to accommodate data, include comprehensive table of contents for all volumes in each volume of the set.

D. Manual Contents: Organize into sets of manageable size. Arrange contents alphabetically by system, subsystem, and equipment. If possible, assemble instructions for subsystems, equipment, and components of one system into a single binder.

E. Identification: In the documentation directory and in each operation and maintenance manual, identify each system, subsystem, and piece of equipment with same designation used in the Contract Documents. If no designation exists, assign a designation according to ASHRAE Guideline 4, "Preparation of Operating and Maintenance Documentation for Building Systems."

1.7 OPERATION AND MAINTENANCE DOCUMENTATION DIRECTORY MANUAL

A. Operation and Maintenance Documentation Directory: Prepare a separate manual that provides an organized reference to emergency, operation, and maintenance manuals. List items and their location to facilitate ready access to desired information. Include the following:

1. List of Systems and Subsystems: List systems alphabetically. Include references to operation and maintenance manuals that contain information about each system.
2. List of Equipment: List equipment for each system, organized alphabetically by system. For pieces of equipment not part of system, list alphabetically in separate list.
3. Tables of Contents: Include a table of contents for each emergency, operation, and maintenance manual.

1.8 EMERGENCY MANUALS

A. Emergency Manual: Assemble a complete set of emergency information indicating procedures for use by emergency personnel and by Owner's operating personnel for types of emergencies indicated.

B. Content: Organize manual into a separate section for each of the following:

1. Type of emergency.
2. Emergency instructions.
3. Emergency procedures.

C. Type of Emergency: Where applicable for each type of emergency indicated below, include instructions and procedures for each system, subsystem, piece of equipment, and component:

1. Fire.
2. Flood.
3. Gas leak.
4. Water leak.
5. Power failure.
6. Water outage.

7. System, subsystem, or equipment failure.
8. Chemical release or spill.

D. Emergency Instructions: Describe and explain warnings, trouble indications, error messages, and similar codes and signals. Include responsibilities of Owner's operating personnel for notification of Installer, supplier, and manufacturer to maintain warranties.

E. Emergency Procedures: Include the following, as applicable:

1. Instructions on stopping.
2. Shutdown instructions for each type of emergency.
3. Operating instructions for conditions outside normal operating limits.
4. Required sequences for electric or electronic systems.
5. Special operating instructions and procedures.

1.9 SYSTEMS AND EQUIPMENT OPERATION MANUALS

A. Systems and Equipment Operation Manual: Assemble a complete set of data indicating operation of each system, subsystem, and piece of equipment not part of a system. Include information required for daily operation and management, operating standards, and routine and special operating procedures.

1. Engage a factory-authorized service representative to assemble and prepare information for each system, subsystem, and piece of equipment not part of a system.
2. Prepare a separate manual for each system and subsystem, in the form of an instructional manual for use by Owner's operating personnel.

B. Content: In addition to requirements in this Section, include operation data required in individual Specification Sections and the following information:

1. System, subsystem, and equipment descriptions. Use designations for systems and equipment indicated on Contract Documents.
2. Performance and design criteria if Contractor has delegated design responsibility.
3. Operating standards.
4. Operating procedures.
5. Operating logs.
6. Wiring diagrams.
7. Control diagrams.
8. Piped system diagrams.
9. Precautions against improper use.
10. License requirements including inspection and renewal dates.

C. Descriptions: Include the following:

1. Product name and model number. Use designations for products indicated on Contract Documents.
2. Manufacturer's name.
3. Equipment identification with serial number of each component.
4. Equipment function.

5. Operating characteristics.
6. Limiting conditions.
7. Performance curves.
8. Engineering data and tests.
9. Complete nomenclature and number of replacement parts.

D. Operating Procedures: Include the following, as applicable:

1. Startup procedures.
2. Equipment or system break-in procedures.
3. Routine and normal operating instructions.
4. Regulation and control procedures.
5. Instructions on stopping.
6. Normal shutdown instructions.
7. Seasonal and weekend operating instructions.
8. Required sequences for electric or electronic systems.
9. Special operating instructions and procedures.

E. Systems and Equipment Controls: Describe the sequence of operation, and diagram controls as installed.

F. Piped Systems: Diagram piping as installed, and identify color coding where required for identification.

1.10 SYSTEMS AND EQUIPMENT MAINTENANCE MANUALS

A. Systems and Equipment Maintenance Manuals: Assemble a complete set of data indicating maintenance of each system, subsystem, and piece of equipment not part of a system. Include manufacturers' maintenance documentation, preventive maintenance procedures and frequency, repair procedures, wiring and systems diagrams, lists of spare parts, and warranty information.

1. Engage a factory-authorized service representative to assemble and prepare information for each system, subsystem, and piece of equipment not part of a system.
2. Prepare a separate manual for each system and subsystem, in the form of an instructional manual for use by Owner's operating personnel.

B. Content: For each system, subsystem, and piece of equipment not part of a system, include source information, manufacturers' maintenance documentation, maintenance procedures, maintenance and service schedules, spare parts list and source information, maintenance service contracts, and warranties and bonds as described below.

C. Source Information: List each system, subsystem, and piece of equipment included in manual, identified by product name and arranged to match manual's table of contents. For each product, list name, address, and telephone number of Installer or supplier and maintenance service agent, and cross-reference Specification Section number and title in Project Manual and drawing or schedule designation or identifier where applicable.

D. Manufacturers' Maintenance Documentation: Include the following information for each component part or piece of equipment:

1. Standard maintenance instructions and bulletins; include only sheets pertinent to product or component installed. Mark each sheet to identify each product or component incorporated into the Work. If data include more than one item in a tabular format, identify each item using appropriate references from the Contract Documents. Identify data applicable to the Work and delete references to information not applicable.

    a. Prepare supplementary text if manufacturers' standard printed data are not available and where the information is necessary for proper operation and maintenance of equipment or systems.

2. Drawings, diagrams, and instructions required for maintenance, including disassembly and component removal, replacement, and assembly.
3. Identification and nomenclature of parts and components.
4. List of items recommended to be stocked as spare parts.

E. Maintenance Procedures: Include the following information and items that detail essential maintenance procedures:

1. Test and inspection instructions.
2. Troubleshooting guide.
3. Precautions against improper maintenance.
4. Disassembly; component removal, repair, and replacement; and reassembly instructions.
5. Aligning, adjusting, and checking instructions.
6. Demonstration and training video recording, if available.

F. Maintenance and Service Schedules: Include service and lubrication requirements, list of required lubricants for equipment, and separate schedules for preventive and routine maintenance and service with standard time allotment.

1. Scheduled Maintenance and Service: Tabulate actions for daily, weekly, monthly, quarterly, semiannual, and annual frequencies.
2. Maintenance and Service Record: Include manufacturers' forms for recording maintenance.

G. Spare Parts List and Source Information: Include lists of replacement and repair parts, with parts identified and cross-referenced to manufacturers' maintenance documentation and local sources of maintenance materials and related services.

H. Maintenance Service Contracts: Include copies of maintenance agreements with name and telephone number of service agent.

I. Warranties and Bonds: Include copies of warranties and bonds and lists of circumstances and conditions that would affect validity of warranties or bonds.

1. Include procedures to follow and required notifications for warranty claims.

J. Drawings: Prepare drawings supplementing manufacturers' printed data to illustrate the relationship of component parts of equipment and systems and to illustrate control sequence and flow diagrams. Coordinate these drawings with information contained in record Drawings to ensure correct illustration of completed installation.

1. Do not use original project record documents as part of maintenance manuals.

1.11 PRODUCT MAINTENANCE MANUALS

A. Product Maintenance Manual: Assemble a complete set of maintenance data indicating care and maintenance of each product, material, and finish incorporated into the Work.

B. Content: Organize manual into a separate section for each product, material, and finish. Include source information, product information, maintenance procedures, repair materials and sources, and warranties and bonds, as described below.

C. Source Information: List each product included in manual, identified by product name and arranged to match manual's table of contents. For each product, list name, address, and telephone number of Installer or supplier and maintenance service agent, and cross-reference Specification Section number and title in Project Manual and drawing or schedule designation or identifier where applicable.

D. Product Information: Include the following, as applicable:

1. Product name and model number.
2. Manufacturer's name.
3. Color, pattern, and texture.
4. Material and chemical composition.
5. Reordering information for specially manufactured products.

E. Maintenance Procedures: Include manufacturer's written recommendations and the following:

1. Inspection procedures.
2. Types of cleaning agents to be used and methods of cleaning.
3. List of cleaning agents and methods of cleaning detrimental to product.
4. Schedule for routine cleaning and maintenance.
5. Repair instructions.

F. Repair Materials and Sources: Include lists of materials and local sources of materials and related services.

G. Warranties and Bonds: Include copies of warranties and bonds and lists of circumstances and conditions that would affect validity of warranties or bonds.

1. Include procedures to follow and required notifications for warranty claims.

PART 2 - PRODUCTS (Not Used)

PART 3 - EXECUTION (Not Used)

END OF SECTION 01 7823

SECTION 01 7900 - DEMONSTRATION AND TRAINING

PART 1 - GENERAL

1.1 RELATED DOCUMENTS

A. Drawings and general provisions of the Contract, including General and Supplementary Conditions and other Division 01 Specification Sections, apply to this Section.

1.2 SUMMARY

A. Section includes administrative and procedural requirements for instructing Owner's personnel, including the following:

1. Instruction in operation and maintenance of systems, subsystems, and equipment.
2. Demonstration and training video recordings.

1.3 INFORMATIONAL SUBMITTALS

A. Instruction Program: Submit outline of instructional program for demonstration and training, including a list of training modules and a schedule of proposed dates, times, length of instruction time, and instructors' names for each training module. Include learning objective and outline for each training module.

1. Indicate proposed training modules using manufacturer-produced demonstration and training video recordings for systems, equipment, and products in lieu of video recording of live instructional module.

B. Attendance Record: For each training module, submit list of participants and length of instruction time.

C. Evaluations: For each participant and for each training module, submit results and documentation of performance-based test.

1.4 CLOSEOUT SUBMITTALS

A. Demonstration and Training Video Recordings: Submit two copies within seven days of end of each training module.

1. Identification: On each copy, provide an applied label with the following information:

a. Name of Project.
b. Name and address of videographer.
c. Name of Architect.

d. Name of Construction Manager.
e. Name of Contractor.
f. Date of video recording.

2. Transcript: Prepared and bound in format matching operation and maintenance manuals. Mark appropriate identification on front and spine of each binder. Include a cover sheet with same label information as the corresponding video recording. Include name of Project and date of video recording on each page.
3. Transcript: Prepared in PDF electronic format. Include a cover sheet with same label information as the corresponding video recording and a table of contents with links to corresponding training components. Include name of Project and date of video recording on each page.
4. At completion of training, submit complete training manual(s) for Owner's use prepared in same paper and PDF file format required for operation and maintenance manuals specified in Section 01 7823 "Operation and Maintenance Data."

1.5 QUALITY ASSURANCE

A. Facilitator Qualifications: A firm or individual experienced in training or educating maintenance personnel in a training program similar in content and extent to that indicated for this Project, and whose work has resulted in training or education with a record of successful learning performance.

B. Videographer Qualifications: A professional videographer who is experienced photographing demonstration and training events similar to those required.

1.6 COORDINATION

A. Coordinate instruction schedule with Owner's operations. Adjust schedule as required to minimize disrupting Owner's operations and to ensure availability of Owner's personnel.

B. Coordinate instructors, including providing notification of dates, times, length of instruction time, and course content.

C. Coordinate content of training modules with content of approved emergency, operation, and maintenance manuals. Do not submit instruction program until operation and maintenance data have been reviewed and approved by Architect.

1.7 INSTRUCTION PROGRAM

A. Program Structure: Develop an instruction program that includes individual training modules for each system and for equipment not part of a system, as required by individual Specification Sections.

B. Training Modules: Develop a learning objective and teaching outline for each module. Include a description of specific skills and knowledge that participant is expected to master. For each module, include instruction for the following as applicable to the system, equipment, or component:

1. Basis of System Design, Operational Requirements, and Criteria: Include the following:

    a. System, subsystem, and equipment descriptions.
    b. Performance and design criteria if Contractor is delegated design responsibility.
    c. Operating standards.
    d. Regulatory requirements.
    e. Equipment function.
    f. Operating characteristics.
    g. Limiting conditions.
    h. Performance curves.

2. Documentation: Review the following items in detail:

    a. Emergency manuals.
    b. Systems and equipment operation manuals.
    c. Systems and equipment maintenance manuals.
    d. Product maintenance manuals.
    e. Project Record Documents.
    f. Identification systems.
    g. Warranties and bonds.
    h. Maintenance service agreements and similar continuing commitments.

3. Emergencies: Include the following, as applicable:

    a. Instructions on meaning of warnings, trouble indications, and error messages.
    b. Instructions on stopping.
    c. Shutdown instructions for each type of emergency.
    d. Operating instructions for conditions outside of normal operating limits.
    e. Sequences for electric or electronic systems.
    f. Special operating instructions and procedures.

4. Operations: Include the following, as applicable:

    a. Startup procedures.
    b. Equipment or system break-in procedures.
    c. Routine and normal operating instructions.
    d. Regulation and control procedures.
    e. Control sequences.
    f. Safety procedures.
    g. Instructions on stopping.
    h. Normal shutdown instructions.
    i. Operating procedures for emergencies.
    j. Operating procedures for system, subsystem, or equipment failure.
    k. Seasonal and weekend operating instructions.
    l. Required sequences for electric or electronic systems.

m. Special operating instructions and procedures.

5. Adjustments: Include the following:

   a. Alignments.
   b. Checking adjustments.
   c. Noise and vibration adjustments.
   d. Economy and efficiency adjustments.

6. Troubleshooting: Include the following:

   a. Diagnostic instructions.
   b. Test and inspection procedures.

7. Maintenance: Include the following:

   a. Inspection procedures.
   b. Types of cleaning agents to be used and methods of cleaning.
   c. List of cleaning agents and methods of cleaning detrimental to product.
   d. Procedures for routine cleaning.
   e. Procedures for preventive maintenance.
   f. Procedures for routine maintenance.
   g. Instruction on use of special tools.

8. Repairs: Include the following:

   a. Diagnosis instructions.
   b. Repair instructions.
   c. Disassembly; component removal, repair, and replacement; and reassembly instructions.
   d. Instructions for identifying parts and components.
   e. Review of spare parts needed for operation and maintenance.

1.8 PREPARATION

A. Assemble educational materials necessary for instruction, including documentation and training module. Assemble training modules into a training manual organized in coordination with requirements in Section 01 7823 "Operation and Maintenance Data."

B. Set up instructional equipment at instruction location.

1.9 INSTRUCTION

A. Facilitator: Engage a qualified facilitator to prepare instruction program and training modules, to coordinate instructors, and to coordinate between Contractor and Owner for number of participants, instruction times, and location.

B. Engage qualified instructors to instruct Owner's personnel to adjust, operate, and maintain systems, subsystems, and equipment not part of a system.

1. Architect will furnish an instructor to describe basis of system design, operational requirements, criteria, and regulatory requirements.
2. Owner will furnish an instructor to describe Owner's operational philosophy.
3. Owner will furnish Contractor with names and positions of participants.

C. Scheduling: Provide instruction at mutually agreed-on times. For equipment that requires seasonal operation, provide similar instruction at start of each season.

1. Schedule training with Owner with at least seven days' advance notice.

D. Training Location and Reference Material: Conduct training on-site in the completed and fully operational facility using the actual equipment in-place. Conduct training using final operation and maintenance data submittals.

E. Evaluation: At conclusion of each training module, assess and document each participant's mastery of module by use of an oral performance-based test.

F. Cleanup: Collect used and leftover educational materials and give to Owner. Remove instructional equipment. Restore systems and equipment to condition existing before initial training use.

1.10 DEMONSTRATION AND TRAINING VIDEO RECORDINGS

A. General: Engage a qualified commercial videographer to record demonstration and training video recordings. Record each training module separately. Include classroom instructions and demonstrations, board diagrams, and other visual aids, but not student practice.

1. At beginning of each training module, record each chart containing learning objective and lesson outline.

B. Digital Video Recordings: Provide high-resolution, digital video in MPEG format, produced by a digital camera with minimum sensor resolution of 12 megapixels and capable of recording in full HD modewith vibration reduction technology.

1. Submit video recordings on CD-ROM or thumb drive and by uploading to web-based Project software site.
2. File Hierarchy: Organize folder structure and file locations according to Project Manual table of contents. Provide complete screen-based menu.
3. File Names: Utilize file names based on name of equipment generally described in video segment, as identified in Project specifications.
4. Contractor and Installer Contact File: Using appropriate software, create a file for inclusion on the equipment demonstration and training recording that describes the following for each Contractor involved on the Project, arranged according to Project Manual table of contents:

a. Name of Contractor/Installer.

b. Business address.
c. Business phone number.
d. Point of contact.
e. Email address.

C. Recording: Mount camera on tripod before starting recording, unless otherwise necessary to adequately cover area of demonstration and training. Display continuous running time.

1. Film training session(s) in segments not to exceed 15 minutes.

a. Produce segments to present a single significant piece of equipment per segment.
b. Organize segments with multiple pieces of equipment to follow order of Project Manual table of contents.
c. Where a training session on a particular piece of equipment exceeds 15 minutes, stop filming and pause training session. Begin training session again upon commencement of new filming segment.

D. Light Levels: Verify light levels are adequate to properly light equipment. Verify equipment markings are clearly visible prior to recording.

1. Furnish additional portable lighting as required.

E. Narration: Describe scenes on video recording by audio narration by microphone while or dubbing audio narration off-site after video recording is recorded. Include description of items being viewed.

F. Transcript: Provide a transcript of the narration. Display images and running time captured from videotape opposite the corresponding narration segment.

G. Preproduced Video Recordings: Provide video recordings used as a component of training modules in same format as recordings of live training.

PART 2 - PRODUCTS

PART 3 - EXECUTION

END OF SECTION 01 7900

SECTION 02 4119 - SELECTIVE DEMOLITION

PART 1 - GENERAL

1.1 SUMMARY

A. Section Includes:

1. Demolition and removal of selected portions of building or structure.
2. Demolition and removal of selected site elements.

B. Related Requirements:

1. Section 01 1000 "Summary" for restrictions on use of the premises, Owner-occupancy requirements, and phasing requirements.
2. Section 01 7300 "Execution" for cutting and patching procedures.

1.2 DEFINITIONS

A. Remove: Detach items from existing construction and dispose of them off-site unless indicated to be salvaged or reinstalled.

B. Remove and Salvage: Detach items from existing construction, in a manner to prevent damage, and .

C. Remove and Reinstall: Detach items from existing construction, in a manner to prevent damage, prepare for reuse, and reinstall where indicated.

D. Existing to Remain: Leave existing items that are not to be removed and that are not otherwise indicated to be salvaged or reinstalled.

E. Dismantle: To remove by disassembling or detaching an item from a surface, using gentle methods and equipment to prevent damage to the item and surfaces; disposing of items unless indicated to be salvaged or reinstalled.

1.3 MATERIALS OWNERSHIP

A. Unless otherwise indicated, demolition waste becomes property of Contractor.

B. Historic items, relics, antiques, and similar objects including, but not limited to, cornerstones and their contents, commemorative plaques and tablets, and other items of interest or value to Owner that may be uncovered during demolition remain the property of Owner.

1. Carefully salvage in a manner to prevent damage and promptly return to Owner.

1.4 PREINSTALLATION MEETINGS

A. Predemolition Conference: Conduct conference at Project site .

1. Inspect and discuss condition of construction to be selectively demolished.
2. Review structural load limitations of existing structure.
3. Review and finalize selective demolition schedule and verify availability of materials, demolition personnel, equipment, and facilities needed to make progress and avoid delays.
4. Review requirements of work performed by other trades that rely on substrates exposed by selective demolition operations.
5. Review areas where existing construction is to remain and requires protection.

1.5 INFORMATIONAL SUBMITTALS

1.6 FIELD CONDITIONS

A. Notify Architect of discrepancies between existing conditions and Drawings before proceeding with selective demolition.

B. Hazardous Materials: Present in buildings and structures to be selectively demolished. A report on the presence of hazardous materials is on file for review and use. Examine report to become aware of locations where hazardous materials are present.

1. Hazardous material remediation is specified elsewhere in the Contract Documents.
2. Do not disturb hazardous materials or items suspected of containing hazardous materials except under procedures specified elsewhere in the Contract Documents.
3. Owner will provide material safety data sheets for suspected hazardous materials that are known to be present in buildings and structures to be selectively demolished because of building operations or processes performed there.

C. Storage or sale of removed items or materials on-site is not permitted.

D. Utility Service: Maintain existing utilities indicated to remain in service and protect them against damage during selective demolition operations.

1. Maintain fire-protection facilities in service during selective demolition operations.

1.7 COORDINATION

A. Arrange selective demolition schedule so as not to interfere with Owner's operations.

PART 2 - PRODUCTS

2.1 PERFORMANCE REQUIREMENTS

A. Regulatory Requirements: Comply with governing EPA notification regulations before beginning selective demolition. Comply with hauling and disposal regulations of authorities having jurisdiction.

B. Standards: Comply with ANSI/ASSP A10.6 and NFPA 241.

PART 3 - EXECUTION

3.1 EXAMINATION

A. Verify that utilities have been disconnected and capped before starting selective demolition operations.

B. Review Project Record Documents of existing construction or other existing condition and hazardous material information provided by Owner. Owner does not guarantee that existing conditions are same as those indicated in Project Record Documents.

C. Verify that hazardous materials have been remediated before proceeding with building demolition operations.

3.2 PREPARATION

A. Refrigerant: Before starting demolition, remove refrigerant from mechanical equipment according to 40 CFR 82 and regulations of authorities having jurisdiction.

3.3 UTILITY SERVICES AND MECHANICAL/ELECTRICAL SYSTEMS

A. Existing Services/Systems to Remain: Maintain services/systems indicated to remain and protect them against damage.

B. Existing Services/Systems to Be Removed, Relocated, or Abandoned: Locate, identify, disconnect, and seal or cap off utility services and mechanical/electrical systems serving areas to be selectively demolished.

1. Arrange to shut off utilities with utility companies.
2. If services/systems are required to be removed, relocated, or abandoned, provide temporary services/systems that bypass area of selective demolition and that maintain continuity of services/systems to other parts of building.
3. Disconnect, demolish, and remove fire-suppression systems, plumbing, and HVAC systems, equipment, and components indicated on Drawings to be removed.
    a. Piping to Be Removed: Remove portion of piping indicated to be removed and cap or plug remaining piping with same or compatible piping material.

b. Piping to Be Abandoned in Place: Drain piping and cap or plug piping with same or compatible piping material and leave in place.
c. Equipment to Be Removed: Disconnect and cap services and remove equipment.
d. Equipment to Be Removed and Reinstalled: Disconnect and cap services and remove, clean, and store equipment; when appropriate, reinstall, reconnect, and make equipment operational.
e. Equipment to Be Removed and Salvaged: Disconnect and cap services and remove equipment and deliver to Owner.
f. Ducts to Be Removed: Remove portion of ducts indicated to be removed and plug remaining ducts with same or compatible ductwork material.
g. Ducts to Be Abandoned in Place: Cap or plug ducts with same or compatible ductwork material and leave in place.

3.4 PROTECTION

A. Temporary Protection: Provide temporary barricades and other protection required to prevent injury to people and damage to adjacent buildings and facilities to remain.

1. Provide protection to ensure safe passage of people around selective demolition area and to and from occupied portions of building.
2. Provide temporary weather protection, during interval between selective demolition of existing construction on exterior surfaces and new construction, to prevent water leakage and damage to structure and interior areas.
3. Protect walls, ceilings, floors, and other existing finish work that are to remain or that are exposed during selective demolition operations.
4. Comply with requirements for temporary enclosures, dust control, heating, and cooling specified in Section 01 5000 "Temporary Facilities and Controls."

B. Temporary Shoring: Design, provide, and maintain shoring, bracing, and structural supports as required to preserve stability and prevent movement, settlement, or collapse of construction and finishes to remain, and to prevent unexpected or uncontrolled movement or collapse of construction being demolished.

1. Strengthen or add new supports when required during progress of selective demolition.

C. Remove temporary barricades and protections where hazards no longer exist.

3.5 SELECTIVE DEMOLITION, GENERAL

A. General: Demolish and remove existing construction only to the extent required by new construction and as indicated. Use methods required to complete the Work within limitations of governing regulations and as follows:

1. Proceed with selective demolition systematically, from higher to lower level. Complete selective demolition operations above each floor or tier before disturbing supporting members on the next lower level.
2. Neatly cut openings and holes plumb, square, and true to dimensions required. Use cutting methods least likely to damage construction to remain or adjoining construction.

Use hand tools or small power tools designed for sawing or grinding, not hammering and chopping. Temporarily cover openings to remain.

3. Cut or drill from the exposed or finished side into concealed surfaces to avoid marring existing finished surfaces.
4. Do not use cutting torches until work area is cleared of flammable materials. At concealed spaces, such as duct and pipe interiors, verify condition and contents of hidden space before starting flame-cutting operations. Maintain portable fire-suppression devices during flame-cutting operations.
5. Maintain fire watch during and for at least 1 hours after flame-cutting operations.
6. Maintain adequate ventilation when using cutting torches.
7. Remove decayed, vermin-infested, or otherwise dangerous or unsuitable materials and promptly dispose of off-site.
8. Remove structural framing members and lower to ground by method suitable to avoid free fall and to prevent ground impact or dust generation.
9. Locate selective demolition equipment and remove debris and materials so as not to impose excessive loads on supporting walls, floors, or framing.
10. Dispose of demolished items and materials promptly. Comply with requirements in Section 01 7419 "Construction Waste Management and Disposal."

B. Site Access and Temporary Controls: Conduct selective demolition and debris-removal operations to ensure minimum interference with roads, streets, walks, walkways, and other adjacent occupied and used facilities.

3.6 SELECTIVE DEMOLITION PROCEDURES FOR SPECIFIC MATERIALS

A. Concrete: Demolish in sections. Cut concrete full depth at junctures with construction to remain and at regular intervals using power-driven saw, and then remove concrete between saw cuts.

B. Masonry: Demolish in small sections. Cut masonry at junctures with construction to remain, using power-driven saw, and then remove masonry between saw cuts.

C. Concrete Slabs-on-Grade: Saw-cut perimeter of area to be demolished, and then break up and remove.

3.7 DISPOSAL OF DEMOLISHED MATERIALS

A. Remove demolition waste materials from Project site and dispose of them in an EPA-approved construction and demolition waste landfill acceptable to authorities having jurisdiction.

1. Do not allow demolished materials to accumulate on-site.
2. Remove and transport debris in a manner that will prevent spillage on adjacent surfaces and areas.
3. Remove debris from elevated portions of building by chute, hoist, or other device that will convey debris to grade level in a controlled descent.
4. Comply with requirements specified in Section 01 7419 "Construction Waste Management and Disposal."

B. Burning: Do not burn demolished materials.

3.8 CLEANING

A. Clean adjacent structures and improvements of dust, dirt, and debris caused by selective demolition operations. Return adjacent areas to condition existing before selective demolition operations began.

END OF SECTION 02 4119

SECTION 06 1000 - ROUGH CARPENTRY

PART 1 - GENERAL

1.1 SUMMARY

A. Section Includes:

1. Framing with dimension lumber.
2. Rooftop equipment bases and support curbs.
3. Wood blocking and nailers.
4. Wood furring and grounds.
5. Wood sleepers.
6. Plywood backing panels.

B. Related Requirements:

1. Section 06 1600 "Sheathing" for sheathing, subflooring, and underlayment.

1.2 DEFINITIONS

A. Boards or Strips: Lumber of less than 2 inches nominal size in least dimension.

B. Dimension Lumber: Lumber of 2 inches nominal size or greater but less than 5 inches nominal size in least dimension.

C. Exposed Framing: Framing not concealed by other construction.

D. OSB: Oriented strand board.

E. Timber: Lumber of 5 inches nominal size or greater in least dimension.

F. Lumber grading agencies, and abbreviations used to reference them, include the following:

1. NeLMA: Northeastern Lumber Manufacturers' Association.
2. NLGA: National Lumber Grades Authority.
3. SPIB: The Southern Pine Inspection Bureau.
4. WCLIB: West Coast Lumber Inspection Bureau.
5. WWPA: Western Wood Products Association.

1.3 ACTION SUBMITTALS

A. Product Data: For each type of process and factory-fabricated product. Indicate component materials and dimensions and include construction and application details.

1. Include data for wood-preservative treatment from chemical treatment manufacturer and certification by treating plant that treated materials comply with requirements. Indicate type of preservative used and net amount of preservative retained.
2. Include data for fire-retardant treatment from chemical treatment manufacturer and certification by treating plant that treated materials comply with requirements. Include physical properties of treated materials based on testing by a qualified independent testing agency.
3. For fire-retardant treatments, include physical properties of treated lumber both before and after exposure to elevated temperatures, based on testing by a qualified independent testing agency according to ASTM D5664.
4. For products receiving a waterborne treatment, include statement that moisture content of treated materials was reduced to levels specified before shipment to Project site.

1.4 INFORMATIONAL SUBMITTALS

A. Material Certificates:

1. For dimension lumber specified to comply with minimum allowable unit stresses. Indicate species and grade selected for each use and design values approved by the ALSC Board of Review.

B. Qualification Statements: For testing agency providing classification marking for fire-retardant treated material, an inspection agency acceptable to authorities having jurisdiction that periodically performs inspections to verify that the material bearing the classification marking is representative of the material tested.

1.5 DELIVERY, STORAGE, AND HANDLING

A. Stack wood products flat with spacers beneath and between each bundle to provide air circulation. Protect wood products from weather by covering with waterproof sheeting, securely anchored. Provide for air circulation around stacks and under coverings.

PART 2 - PRODUCTS

2.1 WOOD PRODUCTS, GENERAL

A. Lumber: Comply with DOC PS 20 and applicable rules of grading agencies indicated. If no grading agency is indicated, comply with the applicable rules of any rules-writing agency certified by the ALSC Board of Review. Grade lumber by an agency certified by the ALSC Board of Review to inspect and grade lumber under the rules indicated.

1. Factory mark each piece of lumber with grade stamp of grading agency.
2. For exposed lumber indicated to receive a stained or natural finish, mark grade stamp on end or back of each piece or omit grade stamp and provide certificates of grade compliance issued by grading agency.
3. Dress lumber, S4S, unless otherwise indicated.

B. Maximum Moisture Content of Lumber:

1. Boards: 15 percent.
2. Dimension Lumber: 15 percent for 2-inch nominal thickness or less; 19 percent for more than 2-inch nominal thickness unless otherwise indicated.
3. Timber. 19 percent .

C. Engineered Wood Products: Acceptable to authorities having jurisdiction and for which current model code research or evaluation reports exist that show compliance with building code in effect for Project.

1. Allowable design stresses, as published by manufacturer, are to meet or exceed those indicated. Manufacturer's published values are to be determined from empirical data or by rational engineering analysis and demonstrated by comprehensive testing performed by a qualified independent testing agency.

2.2 PRESERVATIVE TREATMENT

A. Preservative Treatment by Pressure Process: AWPA U1; Use Category UC2 for interior construction not in contact with ground, Use Category UC3b for exterior construction not in contact with ground, and Use Category UC4a for items in contact with ground.

1. Preservative Chemicals: Acceptable to authorities having jurisdiction and containing no arsenic or chromium. Do not use inorganic boron (SBX) for sill plates.
2. For exposed items indicated to receive a stained or natural finish, chemical formulations are not to require incising, contain colorants, bleed through, or otherwise adversely affect finishes.

B. Kiln-dry lumber after treatment to a maximum moisture content of 19 percent. Do not use material that is warped or that does not comply with requirements for untreated material.

C. Mark lumber with treatment quality mark of an inspection agency approved by the ALSC Board of Review.

1. For exposed lumber indicated to receive a stained or natural finish, mark end or back of each piece or omit marking and provide certificates of treatment compliance issued by inspection agency.

D. Application: Treat items indicated on Drawings, and the following:

1. Wood cants, nailers, curbs, equipment support bases, blocking, stripping, and similar members in connection with roofing, flashing, vapor barriers, and waterproofing.
2. Wood sills, sleepers, blocking, furring, and similar concealed members in contact with masonry or concrete.
3. Wood framing and furring attached directly to the interior of below-grade exterior masonry or concrete walls.
4. Wood framing members that are less than 18 inches above the ground in crawlspaces or unexcavated areas.
5. Wood floor plates that are installed over concrete slabs-on-grade.

6. .

2.3 FIRE-RETARDANT TREATMENT

A. General: Where fire-retardant-treated materials are indicated, materials are to comply with requirements in this article, that are acceptable to authorities having jurisdiction, and with fire-test-response characteristics specified as determined by testing identical products per test method indicated by a qualified testing agency.

B. Fire-Retardant-Treated Lumber and Plywood by Pressure Process: Products with a flame-spread index of 25 or less when tested according to ASTM E84, and with no evidence of significant progressive combustion when the test is extended an additional 20 minutes, and with the flame front not extending more than 10.5 feet beyond the centerline of the burners at any time during the test.

1. Treatment is not to promote corrosion of metal fasteners.
2. Exterior Type: Treated materials are to comply with requirements specified above for fire-retardant-treated lumber and plywood by pressure process after being subjected to accelerated weathering according to ASTM D2898. Use for exterior locations and where indicated.
3. Interior Type A: Treated materials are to have a moisture content of 28 percent or less when tested according to ASTM D3201/D3201M at 92 percent relative humidity. Use where exterior type is not indicated.

C. Kiln-dry lumber after treatment to maximum moisture content of 19 percent.

D. Identify fire-retardant-treated wood with appropriate classification marking of qualified testing agency.

1. For exposed lumber indicated to receive a stained or natural finish, mark end or back of each piece or omit marking and provide certificates of treatment compliance issued by testing agency.

E. For exposed items indicated to receive a stained or natural finish, chemical formulations are not to bleed through, contain colorants, or otherwise adversely affect finishes.

F. Application: Treat items indicated on Drawings, and the following:

1. Concealed blocking.
2. Framing for non-load-bearing partitions.
3. Plywood backing panels.

2.4 DIMENSION LUMBER FRAMING

A. Non-Load-Bearing Interior Partitions by Grade: Construction or No. 2 grade.

1. Application: Interior partitions not indicated as load bearing.
2. Species:

a. Hem-fir (north); NLGA.
b. Southern pine or mixed southern pine; SPIB.
c. Spruce-pine-fir; NLGA.
d. Hem-fir; WCLIB, or WWPA.
e. Spruce-pine-fir (south); NeLMA, WCLIB, or WWPA.
f. Northern species; NLGA.
g. Eastern softwoods; NeLMA.
h. Western woods; WCLIB or WWPA.

2.5 MISCELLANEOUS LUMBER

A. Provide miscellaneous lumber indicated and lumber for support or attachment of other construction, including the following:

1. Blocking.
2. Nailers.
3. Rooftop equipment bases and support curbs.
4. Furring.
5. Grounds.

B. Dimension Lumber Items: Construction or No. 2 grade lumber of the following species:

1. Northern species; NLGA.

C. Concealed Boards: 15 percent maximum moisture content and the following species and grades:

1. Northern species; No. 2 Common grade; NLGA.

D. For blocking not used for attachment of other construction, Utility, Stud, or No. 3 grade lumber of any species may be used provided that it is cut and selected to eliminate defects that will interfere with its attachment and purpose.

E. For blocking and nailers used for attachment of other construction, select and cut lumber to eliminate knots and other defects that will interfere with attachment of other work.

F. For furring strips for installing plywood or hardboard paneling, select boards with no knots capable of producing bent-over nails and damage to paneling.

2.6 PLYWOOD BACKING PANELS

A. Equipment Backing Panels: Plywood, DOC PS 1, Exterior, A-C , fire-retardant treated, in thickness indicated or, if not indicated, not less than 1/2-inch nominal thickness.

2.7 FASTENERS

A. General: Fasteners are to be of size and type indicated and comply with requirements specified in this article for material and manufacture. Provide nails or screws, in sufficient length, to penetrate not less than 1-1/2 inches into wood substrate.

1. Where rough carpentry is exposed to weather, in ground contact, pressure-preservative treated, or in area of high relative humidity, provide fasteners of Type 304 stainless steel.
2. For pressure-preservative-treated wood, use stainless steel fasteners.

B. Nails, Brads, and Staples: ASTM F1667.

C. Power-Driven Fasteners: Fastener systems with an evaluation report acceptable to authorities having jurisdiction, based on ICC-ES AC70.

D. Post-Installed Anchors: Fastener systems with an evaluation report acceptable to authorities having jurisdiction, based on ICC-ES AC01 ICC-ES AC58 ICC-ES AC193 or ICC-ES AC308 as appropriate for the substrate.

2.8 METAL FRAMING ANCHORS

A. Manufacturers: Subject to compliance with requirements, provide products by one of the following:

1. MiTek Industries, Inc.
2. Simpson Strong-Tie Co., Inc.
3. Tamlyn.

B. Allowable design loads, as published by manufacturer, are to meet or exceed those of basis-of-design products . Manufacturer's published values are to be determined from empirical data or by rational engineering analysis and demonstrated by comprehensive testing performed by a qualified independent testing agency. Framing anchors are to be punched for fasteners adequate to withstand same loads as framing anchors.

C. Hot-Dip, Heavy-Galvanized Steel Sheet: ASTM A653/A653M; structural steel (SS), high-strength low-alloy steel Type A (HSLAS Type A), or high-strength low-alloy steel Type B (HSLAS Type B); G185 coating designation; and not less than 0.036 inch thick.

1. Use for wood-preservative-treated lumber and where indicated.

2.9 MISCELLANEOUS MATERIALS

A. Sill-Sealer Gaskets:

1. Glass-fiber-resilient insulation, fabricated in strip form, for use as a sill sealer; 1-inch nominal thickness, compressible to 1/32 inch; selected from manufacturer's standard widths to suit width of sill members indicated.

2. Closed-cell neoprene foam, 1/4 inch thick, selected from manufacturer's standard widths to suit width of sill members indicated.

B. Flexible Flashing: Composite, self-adhesive, flashing product consisting of a pliable, butyl rubber or rubberized-asphalt compound, bonded to a high-density polyethylene film, aluminum foil, or spunbonded polyolefin to produce an overall thickness of not less than 0.025 inch.

PART 3 - EXECUTION

3.1 INSTALLATION, GENERAL

A. Framing Standard: Comply with AF&PA's WCD 1, "Details for Conventional Wood Frame Construction," unless otherwise indicated.

B. Set work to required levels and lines, with members plumb, true to line, cut, and fitted. Fit rough carpentry accurately to other construction. Locate furring, nailers, blocking, grounds, and similar supports to comply with requirements for attaching other construction.

C. Install plywood backing panels by fastening to studs; coordinate locations with utilities requiring backing panels. Install fire-retardant-treated plywood backing panels with classification marking of testing agency exposed to view.

D. Install metal framing anchors to comply with manufacturer's written instructions. Install fasteners through each fastener hole.

E. Install sill sealer gasket to form continuous seal between sill plates and foundation walls.

F. Do not splice structural members between supports unless otherwise indicated.

G. Provide blocking and framing as indicated and as required to support facing materials, fixtures, specialty items, and trim.

1. Provide metal clips for fastening gypsum board or lath at corners and intersections where framing or blocking does not provide a surface for fastening edges of panels. Space clips not more than 16 inches o.c.

H. Provide fire blocking in furred spaces, stud spaces, and other concealed cavities as indicated and as follows:

1. Fire block furred spaces of walls, at each floor level, at ceiling, and at not more than 96 inches o.c. with solid wood blocking or noncombustible materials accurately fitted to close furred spaces.
2. Fire block concealed spaces of wood-framed walls and partitions at each floor level, at ceiling line of top story, and at not more than 96 inches o.c. Where fire blocking is not inherent in framing system used, provide closely fitted solid wood blocks of same width as framing members and 2-inch nominal thickness.

3. Fire block concealed spaces between floor sleepers with same material as sleepers to limit concealed spaces to not more than 100 sq. ft. and to solidly fill space below partitions.

I. Sort and select lumber so that natural characteristics do not interfere with installation or with fastening other materials to lumber. Do not use materials with defects that interfere with function of member or pieces that are too small to use with minimum number of joints or optimum joint arrangement.

J. Comply with AWPA M4 for applying field treatment to cut surfaces of preservative-treated lumber.

K. Where wood-preservative-treated lumber is installed adjacent to metal decking, install continuous flexible flashing separator between wood and metal decking.

L. Securely attach rough carpentry work to substrate by anchoring and fastening as indicated, complying with the following:

1. Table 2304.9.1, "Fastening Schedule," in ICC's International Building Code (IBC).
2. Table R602.3(1), "Fastener Schedule for Structural Members," and Table R602.3(2), "Alternate Attachments," in ICC's International Residential Code for One- and Two-Family Dwellings.
3. ICC-ES evaluation report for fastener.

3.2 INSTALLATION OF WOOD BLOCKING AND NAILERS

A. Install where indicated and where required for attaching other work. Form to shapes indicated and cut as required for true line and level of attached work. Coordinate locations with other work involved.

B. Attach items to substrates to support applied loading. Recess bolts and nuts flush with surfaces unless otherwise indicated.

3.3 INSTALLATION OF WOOD FURRING

A. Install level and plumb with closure strips at edges and openings. Shim with wood as required for tolerance of finish work.

B. Furring to Receive Gypsum Board : Install 1-by-2-inch nominal- size furring vertically at 16 inches o.c.

3.4 INSTALLATION OF WALL AND PARTITION FRAMING

A. General: Provide single bottom plate and double top plates using members of 2-inch nominal thickness whose widths equal that of studs, except single top plate may be used for non-load-bearing partitions. Fasten plates to supporting construction unless otherwise indicated.

1. Provide continuous horizontal blocking at midheight of partitions more than 96 inches high, using members of 2-inch nominal thickness and of same width as wall or partitions.

B. Construct corners and intersections with three or more studs , except that two studs may be used for interior non-load-bearing partitions.

C. Frame openings with multiple studs and headers. Provide nailed header members of thickness equal to width of studs. Support headers on jamb studs.

1. For non-load-bearing partitions, provide double-jamb studs and headers not less than 4-inch nominal depth for openings 48 inches and less in width, 6-inch nominal depth for openings 48 to 72 inches in width, 8-inch nominal depth for openings 72 to 120 inches in width, and not less than 10-inch nominal depth for openings 10 to 12 feet in width.

3.5 PROTECTION

A. Protect wood that has been treated with inorganic boron (SBX) from weather. If, despite protection, inorganic boron-treated wood becomes wet, apply EPA-registered borate treatment. Apply borate solution by spraying to comply with EPA-registered label.

B. Protect rough carpentry from weather. If, despite protection, rough carpentry becomes wet enough that moisture content exceeds that specified, apply EPA-registered borate treatment. Apply borate solution by spraying to comply with EPA-registered label.

END OF SECTION 06 1000

SECTION 06 1600 - SHEATHING

PART 1 - GENERAL

1.1 SUMMARY

A. Section Includes:

1. Wall sheathing.
2. Roof sheathing.
3. Parapet sheathing.
4. Sheathing joint-and-penetration treatment materials.

B. Related Requirements:

1. Section 06 1000 "Rough Carpentry" for plywood backing panels.
2. Section 07 2500 "Weather Barriers" for water-resistive barrier applied over wall sheathing.

1.2 ACTION SUBMITTALS

A. Product Data:

1. Wall sheathing.
2. Roof sheathing.
3. Parapet sheathing.
4. Sheathing joint-and-penetration treatment materials.

1.3 DELIVERY, STORAGE, AND HANDLING

A. Stack panels flat with spacers beneath and between each bundle to provide air circulation. Protect sheathing from weather by covering with waterproof sheeting, securely anchored. Provide for air circulation around stacks and under coverings.

PART 2 - PRODUCTS

2.1 PERFORMANCE REQUIREMENTS

A. Fire-Resistance Ratings: As tested in accordance with ASTM E119; testing by a qualified testing agency. Identify products with appropriate markings of applicable testing agency.

1. Fire-Resistance Ratings: Indicated by design designations from UL's "Fire Resistance Directory" or from the listings of another qualified testing agency.

2.2 WOOD PANEL PRODUCTS

A. Emissions: Products are to meet the testing and product requirements of the California Department of Public Health's "Standard Method for the Testing and Evaluation of Volatile Organic Chemical Emissions from Indoor Sources Using Environmental Chambers."

B. Thickness: As needed to comply with requirements specified, but not less than thickness indicated.

C. Factory mark panels to indicate compliance with applicable standard.

2.3 PRESERVATIVE-TREATED PLYWOOD

A. Preservative Treatment by Pressure Process: AWPA U1; Use Category UC2 for interior construction not in contact with ground, Use Category UC3b for exterior construction not in contact with ground, and Use Category UC4a for items in contact with ground.

1. Preservative Chemicals: Acceptable to authorities having jurisdiction and containing no arsenic or chromium.

B. Mark plywood with appropriate classification marking of an inspection agency acceptable to authorities having jurisdiction.

C. Application: Treat items indicated on Drawings and plywood in contact with masonry or concrete or used with roofing, flashing, vapor barriers, and waterproofing.

2.4 FIRE-RETARDANT-TREATED PLYWOOD

A. General: Where fire-retardant-treated materials are indicated, use materials complying with requirements in this article that are acceptable to authorities having jurisdiction and with fire-test-response characteristics specified as determined by testing identical products per test method indicated by a qualified testing agency.

B. Fire-Retardant-Treated Plywood by Pressure Process: Products with a flame-spread index of 25 or less when tested in accordance with ASTM E84, and with no evidence of significant progressive combustion when the test is extended an additional 20 minutes, and with the flame front not extending more than 10.5 feet beyond the centerline of the burners at any time during the test.

1. Use treatment that does not promote corrosion of metal fasteners.
2. Exterior Type: Treated materials are to comply with requirements specified above for fire-retardant-treated plywood by pressure process after being subjected to accelerated weathering in accordance with ASTM D2898. Use for exterior locations and where indicated.
3. Interior Type A: Treated materials are to have a moisture content of 28 percent or less when tested in accordance with ASTM D3201/D3201M at 92 percent relative humidity. Use where exterior type is not indicated.

C. Kiln-dry material after treatment to a maximum moisture content of 15 percent. Do not use material that is warped or does not comply with requirements for untreated material.

D. Identify fire-retardant-treated plywood with appropriate classification marking of qualified testing agency.

E. Application: Treat plywood indicated on Drawings, and the following:

1. Roof and wall sheathing within 48 inches of party walls.
2. Roof sheathing.

2.5 WALL SHEATHING

A. Glass-Mat Gypsum Sheathing, Walls: ASTM C1177/C1177M.

1. Manufacturers: Subject to compliance with requirements, provide products by one of the following:
   a. Certainteed; SAINT-GOBAIN.
   b. Georgia-Pacific Gypsum LLC.
   c. Gold Bond Building Products, LLC provided by National Gypsum Company.
   d. USG Corporation.
2. Type and Thickness: Type X, 5/8 inch thick or as indicated on drawings.
3. Size: 48 by 96 inches for vertical installation.

2.6 ROOF SHEATHING

A. Plywood Sheathing, Roofs: DOC PS 1 , Exterior sheathing.

1. Span Rating: Not less than 24/0 .
2. Nominal Thickness: Not less than Thickness indicated on drawings.

2.7 PARAPET SHEATHING

A. Plywood Sheathing, Parapets: DOC PS 1 , Exterior sheathing.

1. Span Rating: Not less than 24/0 .
2. Nominal Thickness: 1/2 inch.

2.8 FASTENERS

A. General: Provide fasteners of size and type indicated that comply with requirements specified in this article for material and manufacture.

1. For roof parapet and wall sheathing, provide fasteners with hot-dip zinc coating complying with ASTM A153/A153M .

B. Nails, Brads, and Staples: ASTM F1667.

C. Power-Driven Fasteners: Fastener systems with an evaluation report acceptable to authorities having jurisdiction, based on ICC-ES AC70.

D. Screws for Fastening Sheathing to Wood Framing: ASTM C1002.

2.9 SHEATHING JOINT-AND-PENETRATION TREATMENT MATERIALS

A. Sealant for Glass-Mat Gypsum Sheathing: Silicone emulsion sealant complying with ASTM C834, compatible with sheathing tape and sheathing and recommended by tape and sheathing manufacturers for use with glass-fiber sheathing tape and for covering exposed fasteners.

1. Sheathing Tape: Self-adhering glass-fiber tape, minimum 2 inches wide, 10 by 10 or 10 by 20 threads/inch, of type recommended by sheathing and tape manufacturers for use with silicone emulsion sealant in sealing joints in glass-mat gypsum sheathing and with a history of successful in-service use.

PART 3 - EXECUTION

3.1 INSTALLATION, GENERAL

A. Do not use materials with defects that impair quality of sheathing or pieces that are too small to use with minimum number of joints or optimum joint arrangement. Arrange joints so that pieces do not span between fewer than three support members.

B. Cut panels at penetrations, edges, and other obstructions of work; fit tightly against abutting construction unless otherwise indicated.

C. Securely attach to substrate by fastening as indicated, complying with the following:

1. Table 2304.10.1, "Fastening Schedule," in the ICC's International Building Code.
2. ICC-ES evaluation report for fastener.

D. Use common wire nails unless otherwise indicated. Select fasteners of size that will not fully penetrate members where opposite side will be exposed to view or will receive finish materials. Make tight connections. Install fasteners without splitting wood.

E. Coordinate wall parapet and roof sheathing installation with flashing and joint-sealant installation so these materials are installed in sequence and manner that prevent exterior moisture from passing through completed assembly.

F. Do not bridge building expansion joints; cut and space edges of panels to match spacing of structural support elements.

G. Coordinate sheathing installation with installation of materials installed over sheathing so sheathing is not exposed to precipitation or left exposed at end of the workday when rain is forecast.

3.2 INSTALLATION OF WOOD STRUCTURAL PANEL

A. General: Comply with applicable recommendations in APA Form No. E30, "Engineered Wood Construction Guide," for types of structural-use panels and applications indicated.

B. Fastening Methods: Fasten panels as indicated below:

1. Wall and Roof Sheathing:
   a. Nail to wood framing.
   b. Space panels 1/8 inch apart at edges and ends.

3.3 INSTALLATION OF GYPSUM SHEATHING

A. Comply with GA-253 and with manufacturer's written instructions.

1. Fasten gypsum sheathing to wood framing with nails or screws.
2. Install panels with a 3/8-inch gap where non-load-bearing construction abuts structural elements.
3. Install panels with a 1/4-inch gap where they abut masonry or similar materials that might retain moisture, to prevent wicking.

B. Apply fasteners so heads bear tightly against face of sheathing, but do not cut into facing.

C. Seal sheathing joints in accordance with sheathing manufacturer's written instructions.

END OF SECTION 06 1600

SECTION 06 2023 - INTERIOR FINISH CARPENTRY

PART 1 - GENERAL

1.1 RELATED DOCUMENTS

A. Drawings and general provisions of the Contract, including General and Supplementary Conditions and Division 01 Specification Sections, apply to this Section.

1.2 SUMMARY

A. Section Includes:

1. Interior trim, including non-fire-rated interior door frames.
2. Interior board paneling.
3. MDF Primed and Painted Base.
4. Shelving.

B. Related Requirements:

1. Section 06 1053 "Miscellaneous Rough Carpentry" for furring, blocking, and other carpentry work not exposed to view.
2. Section 09 9123 "Interior Painting" for priming and backpriming of interior finish carpentry.

1.3 DEFINITIONS

A. MDF: Medium-density fiberboard.

B. MDO: Plywood with a medium-density overlay on the face.

C. PVC: Polyvinyl chloride.

1.4 ACTION SUBMITTALS

A. Product Data: For each type of process and factory-fabricated product. Indicate component materials, dimensions, profiles, textures, and colors and include construction and application details.

1. Include data for wood-preservative treatment from chemical-treatment manufacturer and certification by treating plant that treated materials comply with requirements. Indicate type of preservative used and net amount of preservative retained. Include chemical-treatment manufacturer's written instructions for finishing treated material.
2. For products receiving a waterborne treatment, include statement that moisture content of treated materials was reduced before shipment to Project site to levels specified.

B. Samples for Initial Selection: For each type of product involving selection of colors, profiles, or textures.

C. Samples for Verification:

1. For each species and cut of lumber and panel products with nonfactory-applied finish, with half of exposed surface finished; 50 sq. in. for lumber and 8 by 10 inches for panels.
2. For foam-plastic moldings, with half of exposed surface finished; 50 sq. in..
3. For each finish system and color of lumber and panel products with factory-applied finish, 50 sq. in. for lumber and 8 by 10 inches for panels.

1.5 QUALITY ASSURANCE

A. Manufacturer Qualifications: A qualified manufacturer that is certified for chain of custody by an FSC-accredited certification body.

B. Vendor Qualifications: A vendor that is certified for chain of custody by an FSC-accredited certification body.

1.6 DELIVERY, STORAGE, AND HANDLING

A. Stack lumber, plywood, and other panels flat with spacers between each bundle to provide air circulation.

1. Protect materials from weather by covering with waterproof sheeting, securely anchored.
2. Provide for air circulation around stacks and under coverings.

B. Deliver interior finish carpentry materials only when environmental conditions comply with requirements specified for installation areas. If interior finish carpentry materials must be stored in other than installation areas, store only where environmental conditions comply with requirements specified for installation areas.

1.7 FIELD CONDITIONS

A. Environmental Limitations: Do not deliver or install interior finish carpentry materials until building is enclosed and weatherproof, wet-work in space is completed and nominally dry, and HVAC system is operating and maintaining temperature and relative humidity at occupancy levels during the remainder of the construction period.

B. Do not install finish carpentry materials that are wet, moisture damaged, or mold damaged.

1. Indications that materials are wet or moisture damaged include, but are not limited to, discoloration, sagging, or irregular shape.
2. Indications that materials are mold damaged include, but are not limited to, fuzzy or splotchy surface contamination and discoloration.

PART 2 - PRODUCTS

2.1 MATERIALS, GENERAL

A. Composite Wood Products: Products shall be made using ultra-low-emitting formaldehyde resins or shall be made with no added formaldehyde.

B. Lumber: DOC PS 20 and applicable rules of grading agencies indicated. If no grading agency is indicated, comply with applicable rules of any rules-writing agency certified by the American Lumber Standard Committee's (ALSC) Board of Review. Grade lumber by an agency certified by the ALSC's Board of Review to inspect and grade lumber under the rules indicated.

1. Factory mark each piece of lumber with grade stamp of grading agency.
2. For exposed lumber, mark grade stamp on end or back of each piece, or omit grade stamp and provide certificates of grade compliance issued by grading agency.

C. Softwood Plywood: DOC PS 1.

D. Hardboard: ANSI A135.4.

E. MDF: ANSI A208.2, Grade 130.

F. Particleboard: ANSI A208.1, Grade M-2-Exterior Glue.

G. Melamine-Faced Particleboard: Particleboard complying with ANSI A208.1, Grade M-2, finished on both faces with thermally fused, melamine-impregnated decorative paper and complying with NEMA LD 3, Grade VGL, for Test Methods 3.3, 3.4, 3.6, 3.8, and 3.10.

1. Color: As selected by Architect from manufacturer's full range.

2.2 MANUFACTURERS

A. Basis of Design: Atlantic Plywood Company.

2.3 WOOD-PRESERVATIVE-TREATED MATERIALS

A. Preservative Treatment by Pressure Process: AWPA U1; Use Category UC1.

1. Kiln dry lumber and plywood after treatment to a maximum moisture content of 19 and 18 percent, respectively.

2. For exposed items indicated to receive transparent finish, do not use chemical formulations that contain colorants or that bleed through or otherwise adversely affect finishes.
3. Do not use material that is warped or does not comply with requirements for untreated material.
4. Mark lumber with treatment-quality mark of an inspection agency approved by the ALSC's Board of Review.

    a. For exposed lumber indicated to receive a stained or natural finish, mark end or back of each piece.

5. Mark plywood with appropriate classification marking of an inspection agency acceptable to authorities having jurisdiction.

    a. For exposed plywood indicated to receive a stained or natural finish, mark back of each piece.

6. Application: Where indicated on Drawings All interior lumber and plywood.

2.4 INTERIOR TRIM

A. Hardwood Lumber Trim for Transparent Finish (Stain or Clear Finish):

1. Species and Grade: White Oak / As shown on Drawings, NHLA Clear.
2. Maximum Moisture Content: 9 percent.
3. Finger Jointing: Not allowed.
4. Gluing for Width: Not allowed.
5. Veneered Material: Not allowed.
6. Face Surface: Surfaced (smooth).
7. Matching: Selected for compatible grain and color.

B. Softwood Moldings for Transparent Finish (Stain or Clear Finish): MMPA WM 4, N-grade wood moldings. Made to patterns included in MMPA's "WM/Series Softwood Moulding Patterns."

C. Hardwood Moldings for Transparent Finish (Stain or Clear Finish): MMPA WM 4, N-grade wood moldings made to patterns included in MMPA's "HWM/Series Hardwood Moulding Patterns."

D. Moldings for Opaque Finish (Painted Finish): Made to patterns included in MMPA's "WM/Series Softwood Moulding Patterns."

2.5 PANELING

A. Hardwood Veneer Plywood Paneling: Manufacturer's stock hardwood plywood panels complying with HPVA HP-1.

1. Manufacturers: Subject to compliance with requirements, provide products by one of the following:

    a. Chesapeake Plywood LLC.
    b. Holland Southwest International.
    c. Houston Plywood Industry, Inc.
2. Face Veneer Species and Cut: Plain-sliced White oak.
3. Veneer Matching: Selected for similar color and grain.
4. Thickness: 7/16 inch.
5. Panel Size: 48 by 120 inches.
6. Glue Bond: Type II (interior).
7. Face Pattern: Manufacturer's standard V grooved pattern, with grooves at edges, center, and third points of panels, and at other locations to provide pattern resembling random-width boards.
8. Finish: Transparent, UV-resistant, protective finish, Match Architect's samples.

B. Board Paneling: Interior wood-board paneling complying with MMPA WM 9.

2.6 MISCELLANEOUS MATERIALS

A. Fasteners for Interior Finish Carpentry: Nails, screws, Z clips and other anchoring devices of type, size, material, and finish required for application indicated to provide secure attachment, concealed where possible.

B. Glue: Aliphatic-resin, polyurethane, or resorcinol wood glue recommended by manufacturer for general carpentry use.
1. Adhesives shall have a VOC content of 30 g/L or less.

C. Paneling Adhesive: Comply with paneling manufacturer's written instructions for adhesives.

1. Adhesives shall have a VOC content of 50 g/L or less.

D. Multipurpose Construction Adhesive: Formulation, complying with ASTM D3498, that is recommended for indicated use by adhesive manufacturer.

1. Adhesives shall have a VOC content of 70 g/L or less.

2.7 FABRICATION

A. Back out or kerf backs of the following members, except those with ends exposed in finished work:

1. Interior standing and running trim.
2. Wood-board paneling.

B. Ease edges of lumber less than 1 inch in nominal thickness to 1/16-inch radius and edges of lumber 1 inch or more in nominal thickness to 1/8-inch radius.

PART 3 - EXECUTION

3.1 EXAMINATION

A. Examine substrates, with Installer present, for compliance with requirements for installation tolerances and other conditions affecting performance of the Work.

B. Examine finish carpentry materials before installation. Reject materials that are wet, moisture damaged, and mold damaged.

C. Proceed with installation only after unsatisfactory conditions have been corrected.

3.2 PREPARATION

A. Clean substrates of projections and substances detrimental to application.

B. Before installing interior finish carpentry, condition materials to average prevailing humidity in installation areas for a minimum of 24 hours unless longer conditioning is recommended by manufacturer.

3.3 INSTALLATION, GENERAL

A. Do not use materials that are unsound; warped; improperly treated or finished; inadequately seasoned; too small to fabricate with proper jointing arrangements; or with defective surfaces, sizes, or patterns.

B. Install interior finish carpentry level, plumb, true, and aligned with adjacent materials.

1. Use concealed shims where necessary for alignment.
2. Scribe and cut interior finish carpentry to fit adjoining work. Refinish and seal cuts as recommended by manufacturer.
3. Where face fastening is unavoidable, countersink fasteners, fill surface flush, and sand unless otherwise indicated.
4. Install to tolerance of 1/8 inch in 96 inches for level and plumb. Install adjoining interior finish carpentry with 1/32-inch maximum offset for flush installation and 1/16-inch maximum offset for reveal installation.
5. Coordinate interior finish carpentry with materials and systems in or adjacent to it. Provide cutouts for mechanical and electrical items that penetrate interior finish carpentry.

3.4 STANDING AND RUNNING TRIM INSTALLATION

A. Install trim with minimum number of joints as is practical, using full-length pieces from maximum lengths of lumber available.

1. Do not use pieces less than 24 inches long, except where necessary.

2. Stagger joints in adjacent and related standing and running trim.
3. Miter at returns, miter at outside corners, and cope at inside corners to produce tight-fitting joints with full-surface contact throughout length of joint.
4. Use scarf joints for end-to-end joints.
5. Plane backs of casings to provide uniform thickness across joints where necessary for alignment.
6. Match color and grain pattern of trim for transparent finish (stain or clear finish) across joints.
7. Install trim after gypsum-board joint finishing operations are completed.
8. Install without splitting; drill pilot holes before fastening where necessary to prevent splitting.
9. Fasten to prevent movement or warping.
10. Countersink fastener heads on exposed carpentry work and fill holes.

3.5 PANELING INSTALLATION

A. Plywood Paneling: Select and arrange panels on each wall to minimize noticeable variations in grain character and color between adjacent panels.

1. Leave 1/4-inch gap to be covered with trim at top, bottom, and openings.
2. Install with uniform tight joints between panels.
3. Attach panels to supports with manufacturer's recommended panel adhesive and fasteners.
4. Space fasteners and adhesive as recommended by panel manufacturer.
5. Conceal fasteners to greatest practical extent.
6. Arrange panels with grooves and joints over supports.

    a. Fasten to supports with nails of type and at spacing recommended by panel manufacturer.
    b. Use fasteners with prefinished heads matching groove color.

B. Hardboard Paneling: Install according to manufacturer's written instructions.

1. Leave 1/4-inch gap to be covered with trim at top, bottom, and openings.
2. Butt adjacent panels with moderate contact.
3. Use fasteners with prefinished heads matching paneling color.
4. Wood Stud or Furring Substrate: Install with 1-inch annular-ring shank hardboard nails.
5. Plaster or Gypsum-Board Substrate: Install with 1-5/8-inch annular-ring shank hardboard nails.
6. Nailing: Space nails 4 inches o.c. at panel perimeter and 8 inches o.c. at intermediate supports unless otherwise required by manufacturer.

C. Board Paneling: Install according to manufacturer's written instructions.

1. Arrange in random-width pattern suggested by manufacturer unless boards or planks are of uniform width.
2. Install in full lengths without end joints.
3. Stagger end joints in random pattern to uniformly distribute joints on each wall.

4. Install with uniform end joints with only end-matched (tongue-and-groove) joints within each field of paneling.
5. Install with uniform end joints. Locate end joints only over furring or blocking.
6. Select and arrange boards on each wall to minimize noticeable variations in grain character and color between adjacent boards.
7. Install with uniform tight joints between boards.
8. Fasten paneling by face nailing, setting nails, and filling over nail heads.
9. Fasten paneling with trim screws, set below face and filled.
10. Fasten paneling by blind nailing through tongues.
11. Fasten paneling with paneling system manufacturer's concealed clips.
12. Fasten paneling to gypsum wallboard with panel adhesive.

3.6 ADJUSTING

A. Replace interior finish carpentry that is damaged or does not comply with requirements.

1. Interior finish carpentry may be repaired or refinished if work complies with requirements and shows no evidence of repair or refinishing.

B. Adjust joinery for uniform appearance.

3.7 CLEANING

A. Clean interior finish carpentry on exposed and semiexposed surfaces.

B. Restore damaged or soiled areas and touch up factory-applied finishes if any.

3.8 PROTECTION

A. Protect installed products from damage from weather and other causes during construction.

B. Remove and replace finish carpentry materials that are wet, moisture damaged, and mold damaged.

1. Indications that materials are wet or moisture damaged include, but are not limited to, discoloration, sagging, or irregular shape.
2. Indications that materials are mold damaged include, but are not limited to, fuzzy or splotchy surface contamination and discoloration.

END OF SECTION 06 2023

SECTION 07 1326 - SELF-ADHERING SHEET WATERPROOFING

PART 1 - GENERAL

1.1 RELATED DOCUMENTS

A. Drawings and general provisions of the Contract, including General and Supplementary Conditions and Division 01 Specification Sections, apply to this Section.

1.2 SUMMARY

A. Section Includes:

1. Modified bituminous sheet waterproofing.

1.3 PREINSTALLATION MEETINGS

A. Preinstallation Conference: Conduct conference at Project site.

1. Review waterproofing requirements including surface preparation, substrate condition and pretreatment, minimum curing period, forecasted weather conditions, special details and sheet flashings, installation procedures, testing and inspection procedures, and protection and repairs.

1.4 ACTION SUBMITTALS

A. Product Data: For each type of product.

1. Include construction details, material descriptions, and tested physical and performance properties of waterproofing.
2. Include manufacturer's written instructions for evaluating, preparing, and treating substrate.

B. Shop Drawings: Show locations and extent of waterproofing and details of substrate joints and cracks, expansion joints, sheet flashings, penetrations, inside and outside corners, tie-ins with adjoining waterproofing, and other termination conditions.

1. Include setting drawings showing layout, sizes, sections, profiles, and joint details of pedestal-supported concrete pavers.

C. Samples: For each exposed product and for each color and texture specified, including the following products:

1.5 INFORMATIONAL SUBMITTALS

A. Qualification Data: For Installer.

B. Field quality-control reports.

C. Sample Warranties: For special warranties.

1.6 QUALITY ASSURANCE

A. Installer Qualifications: An entity that employs installers and supervisors who are trained and approved by waterproofing manufacturer.

B. Vertical and horizontal waterproofing membranes specified in this Section that make a seal against each other underground shall be supplied by the same manufacturer and installed by the same applicator as a single source/responsibility scope.

C. Mockups: Build mockups to verify selections made under Sample submittals and to set quality standards for installation.

1. Build for each typical waterproofing installation including pavers and accessories to demonstrate surface preparation, crack and joint treatments, inside and outside corner treatments, and protection.

a. Size: 100 sq. ft. in area if not indicated on Drawings.
b. Description: Each type of deck and plaza installation.

2. Approval of mockups does not constitute approval of deviations from the Contract Documents contained in mockups unless Architect specifically approves such deviations in writing.

1.7 FIELD CONDITIONS

A. Environmental Limitations: Apply waterproofing within the range of ambient and substrate temperatures recommended in writing by waterproofing manufacturer. Do not apply waterproofing to a damp or wet substrate.

1. Do not apply waterproofing in snow, rain, fog, or mist.

B. Maintain adequate ventilation during preparation and application of waterproofing materials.

1.8 WARRANTY

A. Manufacturer's Warranty: Manufacturer agrees to furnish replacement waterproofing material for waterproofing that does not comply with requirements or that fails to remain watertight within specified warranty period.

1. Warranty Period: Ten years from date of Substantial Completion.

B. Installer's Special Warranty: Specified form, on warranty form at end of this Section, signed by Installer, covering Work of this Section, for warranty period of two years.

1. Warranty includes removing and reinstalling protection board, drainage panels, insulation, pedestals, and pavers on plaza decks.

PART 2 - PRODUCTS

2.1 MANUFACTURERS

A. Source Limitations for Waterproofing System: Obtain waterproofing materials, protection course, and molded-sheet drainage panels] from single source from single manufacturer.

B. Self-Adhering Membranes for transitions and flashing between WRB and roof Membranes.

2.2 MODIFIED BITUMINOUS SHEET WATERPROOFING

A. Modified Bituminous Sheet: Minimum 60-mil nominal thickness, self-adhering sheet consisting of 56 mils of rubberized asphalt laminated on one side to a 4-mil-thick, polyethylene-film reinforcement, and with release liner on adhesive side; formulated for application with primer or surface conditioner that complies with VOC limits of authorities having jurisdiction.

1. Products: Subject to compliance with requirements, provide one of the following:

a. Carlisle Coatings & Waterproofing Inc; CCW MiraDRI 860/861.
b. GCP / Grace Construction Products; Bituthene 4000.

2.3 AUXILIARY MATERIALS

A. Furnish auxiliary materials recommended by waterproofing manufacturer for intended use and compatible with sheet waterproofing.

1. Furnish liquid-type auxiliary materials that comply with VOC limits of authorities having jurisdiction.

B. Primer: Liquid waterborne primer recommended for substrate by sheet-waterproofing material manufacturer.

C. Surface Conditioner: Liquid, waterborne surface conditioner recommended for substrate by sheet-waterproofing material manufacturer.

D. Liquid Membrane: Elastomeric, two-component liquid, cold fluid applied, of trowel grade or low viscosity.

E. Substrate Patching Membrane: Low-viscosity, two-component, modified asphalt coating.

F. Metal Termination Bars: Aluminum bars, approximately 1 by 1/8 inch, predrilled at 9-inch centers.

G. Protection Course: ASTM D 6506, semirigid sheets of fiberglass or mineral-reinforced-asphaltic core, pressure laminated between two asphalt-saturated fibrous liners and as follows:

1. Thickness: Nominal 1/8 inch for vertical applications; 1/4 inch elsewhere.
2. Adhesive: Rubber-based solvent type recommended by waterproofing manufacturer for protection course type.

H. Water Stop: Adcor ES hydrophilic non-bentonite waterstop by GCP Advanced Technologies Construction Products for non-moving concrete construction joint.

1. Physical Properties
   a. Size: One inch by one-half inch
   b. Hydrostatic Head Resistance: 231 feet (70 meters)
   c. Wet-Dry Cycling (25 Cycles @ 231 feet: No effect.

I. Preformed Soil Retention Wall Tie Back Covers: Preprufe Tieback Cover by GCP Advanced Technologies Construction Products as a prefabricated detail for soil retention wall tiebacks.

J. Preformed Inside and Outside Corners: Preprufe Preformed Corners by GCP Advanced Technologies Construction Products as prefabricated inside and outside corners.

K. Detail Tape: Self-adhesive, double-sided tape recommended by sheet-waterproofing material manufacturer.

L. Control Joint Tape: Pressure sensitive self-adhesive tape formulated for low temperature application and/or specifically formulated for application in hot climates as recommended by sheet-waterproofing material manufacturer.

M. Temporary hardboard protection course: Tempered hardboard, 1/4" thick, rough on at least one side manufactured in accordance with ANSI 135.4 Class 1-Tempered, 1S1.

N. Geotextile Strip: Nonwoven, needle-punched geotextile facing with an apparent opening size not exceeding No. 70 (0.21-mm) sieve.

O. Slab reinforcing protection: Membrane manufacturer's recommended protection for horizontal steel slab reinforcing between reinforcing chairs and membrane.

P. Miscellaneous Materials: Accessories specified or acceptable to manufacturer of pre-applied waterproofing membrane.

2.4 MOLDED-SHEET DRAINAGE PANELS

A. Nonwoven-Geotextile-Faced, Molded-Sheet Drainage Panel with Polymeric Film: Composite subsurface drainage panel acceptable to waterproofing manufacturer and consisting of a studded, nonbiodegradable, molded-plastic-sheet drainage core; with a nonwoven, needle-punched geotextile facing with an apparent opening size not exceeding No. 70 sieve laminated to one side of the core and a polymeric film bonded to the other side; and with a vertical flow rate through the core of 9 to 21 gpm per ft..

1. Basis of Design Products: Subject to compliance with requirements, provide"CCW MiraDRAIN 6200 by Carlisle Coatings & Waterproofing Inc. or subject to compliance with requirements comparable product by one of the following:

    a. American Hydrotech, Inc.
    b. BASF Corporation.
    c. CETCO, a Minerals Technologies company.
    d. GCP Applied Technologies Inc.
    e. ISI Building Products.
    f. Polyguard Products, Inc.
    g. Urethane Polymers International, Inc.

PART 3 - EXECUTION

3.1 EXAMINATION

A. Examine substrates, areas, and conditions, with Installer present, for compliance with requirements and other conditions affecting performance of waterproofing.

1. Verify that concrete has cured and aged for minimum time period recommended in writing by waterproofing manufacturer.
2. Verify that substrate is visibly dry and within the moisture limits recommended in writing by manufacturer. Test for capillary moisture by plastic sheet method according to ASTM D 4263.
3. Verify that compacted subgrade is dry, smooth, sound, and ready to receive waterproofing sheet.

B. Proceed with installation only after unsatisfactory conditions have been corrected.

3.2 PREPARATION

A. Clean, prepare, and treat substrates according to manufacturer's written instructions. Provide clean, dust-free, and dry substrates for waterproofing application.

B. Mask off adjoining surfaces not receiving waterproofing to prevent spillage and overspray affecting other construction.

C. Remove grease, oil, bitumen, form-release agents, paints, curing compounds, and other penetrating contaminants or film-forming coatings from concrete.

D. Remove fins, ridges, mortar, and other projections and fill honeycomb, aggregate pockets, holes, and other voids.

E. Prepare, fill, prime, and treat joints and cracks in substrates. Remove dust and dirt from joints and cracks according to ASTM D 4258.

1. Install sheet strips of width according to manufacturer's written instructions and center over treated construction and contraction joints and cracks exceeding a width of 1/8 inch for modified bituminous deck-paving waterproofing].

F. Bridge and cover isolation joints, expansion joints, and discontinuous deck-to-wall and deck-to-deck joints with overlapping sheet strips of widths according to manufacturer's written instructions.

1. Invert and loosely lay first sheet strip over center of joint. Firmly adhere second sheet strip to first and overlap to substrate.

G. Corners: Prepare, prime, and treat inside and outside corners according to ASTM D 6135.

1. Install membrane strips centered over vertical inside corners. Install 3/4-inch fillets of liquid membrane on horizontal inside corners and as follows:

a. At footing-to-wall intersections, extend liquid membrane in each direction from corner or install membrane strip centered over corner.
b. At plaza-deck-to-wall intersections, extend liquid membrane or sheet strips onto deck waterproofing and to finished height of sheet flashing.

H. Prepare, treat, and seal vertical and horizontal surfaces at terminations and penetrations through waterproofing and at drains and protrusions according to ASTM D 6135.

I. Prepare, treat and sel all tieback anchor heads utilizing membrane manufacture's pre-fabricated covers, tapes, and adhesive in accordance with membrane manufacture's written instructions.

3.3 MODIFIED BITUMINOUS SHEET-WATERPROOFING APPLICATION

A. Install modified bituminous sheets according to waterproofing manufacturer's written instructions and per recommendations in ASTM D 6135.

B. Apply primer to substrates at required rate and allow it to dry. Limit priming to areas that will be covered by sheet waterproofing in same day. Reprime areas exposed for more than 24 hours.

C. Apply and firmly adhere sheets over area to receive waterproofing. Accurately align sheets and maintain uniform 2-1/2-inch-minimum lap widths and end laps. Overlap and seal seams, and stagger end laps to ensure watertight installation.

1. When ambient and substrate temperatures range between 25 and 40 deg F, install self-adhering, modified bituminous sheets produced for low-temperature application. Do not use low-temperature sheets if ambient or substrate temperature is higher than 60 deg F.

D. Horizontal Application: Apply sheets from low to high points of decks to ensure that laps shed water.

E. Apply continuous sheets over already-installed sheet strips, bridging substrate cracks, construction, and contraction joints.

F. Seal edges of sheet-waterproofing terminations with mastic.

G. Install sheet-waterproofing and auxiliary materials to tie into adjacent waterproofing.

H. Repair tears, voids, and lapped seams in waterproofing not complying with requirements. Slit and flatten fishmouths and blisters. Patch with sheet waterproofing extending 6 inches beyond repaired areas in all directions.

I. Immediately install protection course with butted joints over waterproofing membrane.

3.4 FIELD QUALITY CONTROL

A. Testing Agency: Engage a qualified testing agency to perform tests.

B. Manufacturer's Field Service: Engage a ┼ full-time ┼ site representative qualified by waterproofing membrane manufacturer to inspect substrate conditions, surface preparation, membrane application, flashings, protection, and drainage components; and to furnish daily reports to Architect.

C. Flood Testing: Flood test each deck area for leaks, according to procedures in ASTM D 5957, after completing waterproofing but before placing overlying construction. Install temporary containment assemblies, plug or dam drains, and flood with potable water.

1. Flood to an average depth of 2-1/2 inches with a minimum depth of 1 inch and a maximum depth of 4 inches. Maintain 2 inches of clearance from top of sheet flashings.
2. Flood each area for 48 hours.
3. Testing agency shall observe flood testing and examine underside of decks and terminations for evidence of leaks during flood testing.
4. After flood testing, repair leaks, repeat flood tests, and make further repairs until waterproofing installation is watertight.

D. Waterproofing will be considered defective if it does not pass tests and inspections.

E. Prepare test and inspection reports.

3.5 PROTECTION, REPAIR, AND CLEANING

A. Do not permit foot or vehicular traffic on unprotected membrane.

B. Protect waterproofing from damage and wear during remainder of construction period.

C. Protect installed insulation drainage panels from damage due to UV light, harmful weather exposures, physical abuse, and other causes. Provide temporary coverings where insulation is subject to abuse and cannot be concealed and protected by permanent construction immediately after installation.

D. Correct deficiencies in or remove waterproofing that does not comply with requirements; repair substrates, reapply waterproofing, and repair sheet flashings.

E. Clean spillage and soiling from adjacent construction using cleaning agents and procedures recommended in writing by manufacturer of affected construction.

END OF SECTION 07 1326

SECTION 07 2100 - THERMAL INSULATION

PART 1 - GENERAL

1.1 SUMMARY

A. Section Includes:

1. Glass-fiber blanket insulation.

B. Related Requirements:

1. Section 06 1600 "Sheathing" for foam-plastic board sheathing installed directly over wood or steel framing.
2. Section 09 2900 "Gypsum Board" for sound attenuation blanket used as acoustic insulation.

1.2 ACTION SUBMITTALS

A. Product Data:

1. Glass-fiber blanket insulation.

1.3 INFORMATIONAL SUBMITTALS

A. Installer's Certification: Listing type, manufacturer, and R-value of insulation installed in each element of the building thermal envelope.

1. For blown-in or sprayed fiberglass and cellulosic-fiber loose-fill insulation, indicate initial installed thickness, settled thickness, settled R-value, installed density, coverage area, and number of bags installed.
2. Sign, date, and post the certification in a conspicuous location on Project site.

1.4 DELIVERY, STORAGE, AND HANDLING

A. Protect insulation materials from physical damage and from deterioration due to moisture, soiling, and other sources. Store inside and in a dry location. Comply with manufacturer's written instructions for handling, storing, and protecting during installation.

B. Protect foam-plastic board insulation as follows:

1. Do not expose to sunlight except to necessary extent for period of installation and concealment.

2. Protect against ignition at all times. Do not deliver foam-plastic board materials to Project site until just before installation time.
3. Quickly complete installation and concealment of foam-plastic board insulation in each area of construction.

PART 2 - PRODUCTS

2.1 PERFORMANCE REQUIREMENTS

A. Surface-Burning Characteristics: Maximum flame-spread and smoke-developed indexes less than 25 and 450 when tested in accordance with ASTM E84.

B. Fire-Resistance Ratings: Comply with ASTM E119 or UL 263; testing by a qualified testing agency. Identify products with appropriate markings of applicable testing agency.

1. Indicate design designations from UL's "Fire Resistance Directory" or from listings of another qualified testing agency.

C. Labeling: Provide identification of mark indicating R-value of each piece of insulation 12 inches and wider in width.

D. Thermal-Resistance Value (R-Value): R-value as indicated on Drawings in accordance with ASTM C518.

2.2 GLASS-FIBER BLANKET INSULATION

A. Glass-Fiber Blanket Insulation, Kraft Faced : ASTM C665, Type II (nonreflective faced), Class C (faced surface not rated for flame propagation); Category 1 (membrane is a vapor barrier).

1. Manufacturers: Subject to compliance with requirements, provide products by one of the following:
   a. Certainteed; SAINT-GOBAIN.
   b. Johns Manville; a Berkshire Hathaway company.
   c. Owens Corning.

2.3 ACCESSORIES

A. Adhesive for Bonding Insulation: Product compatible with insulation and air and water barrier materials, and with demonstrated capability to bond insulation securely to substrates without damaging insulation and substrates.

PART 3 - EXECUTION

3.1 PREPARATION

A. Clean substrates of substances that are harmful to insulation, including removing projections capable of puncturing insulation or vapor retarders, or that interfere with insulation attachment.

3.2 INSTALLATION, GENERAL

A. Comply with insulation manufacturer's written instructions applicable to products and applications.

B. Install insulation that is undamaged, dry, and unsoiled and that has not been left exposed to ice, rain, or snow at any time.

C. Install insulation with manufacturer's R-value label exposed after insulation is installed.

D. Extend insulation to envelop entire area to be insulated. Fit tightly around obstructions and fill voids with insulation. Remove projections that interfere with placement.

E. Provide sizes to fit applications and selected from manufacturer's standard thicknesses, widths, and lengths. Apply single layer of insulation units unless multiple layers are otherwise shown or required to make up total thickness or to achieve R-value.

3.3 INSTALLATION OF INSULATION IN FRAMED CONSTRUCTION

A. Blanket Insulation: Install in cavities formed by framing members according to the following requirements:

1. Use insulation widths and lengths that fill the cavities formed by framing members. If more than one length is required to fill the cavities, provide lengths that will produce a snug fit between ends.
2. Place insulation in cavities formed by framing members to produce a friction fit between edges of insulation and adjoining framing members.
3. Maintain 3-inch clearance of insulation around recessed lighting fixtures not rated for or protected from contact with insulation.
4. For wood-framed construction, install blankets in accordance with ASTM C1320 and as follows:
    a. With faced blankets having stapling flanges, lap blanket flange over flange of adjacent blanket to maintain continuity of vapor retarder once finish material is installed over it.
5. Vapor-Retarder-Faced Blankets: Tape joints and ruptures in vapor-retarder facings, and seal each continuous area of insulation to ensure airtight installation.
    a. Exterior Walls: Set units with facing placed toward as indicated on Drawings.
    b. Interior Walls: Set units with facing placed toward areas of high humidity .

3.4 PROTECTION

A. Protect installed insulation from damage due to harmful weather exposures, physical abuse, and other causes.

B. Provide temporary coverings or enclosures where insulation is subject to abuse and cannot be concealed and protected by permanent construction immediately after installation.

END OF SECTION 07 2100

SECTION 07 2500 - WEATHER BARRIERS

PART 1 - GENERAL

1.1 SUMMARY

A. Section Includes:

1. Building wrap.
2. Flexible flashing.

1.2 ACTION SUBMITTALS

A. Product Data:

1. Building wrap.
2. Flexible flashing.

B. Product Data Submittals: For building wrap , include data on air and water-vapor permeance based on testing in accordance with referenced standards.

PART 2 - PRODUCTS

2.1 WATER-RESISTIVE BARRIER

A. Building Wrap: ASTM E2556/E2556M, Type I ASTM E1677, Type I air barrier; with flame-spread and smoke-developed indexes of less than 25 and 450, respectively, when tested in accordance with ASTM E84; UV stabilized; and acceptable to authorities having jurisdiction.

1. Manufacturers: Subject to compliance with requirements, provide products by one of the following:
   a. Dorken Systems Inc.
   b. DuPont de Nemours, Inc.
   c. Kingspan Insulation LLC.
2. Water-Vapor Permeance: Minimum 20 perms per ASTM E96/E96M, Desiccant Method (Procedure A).
3. Air Permeance: Maximum 0.004 cfm/sq. ft. at 0.3-inch wg when tested in accordance with ASTM E2178.
4. Allowable UV Exposure Time: Not more than 120 days.

2.2 FLEXIBLE FLASHING

A. Butyl Rubber Flashing: Composite, self-adhesive, flashing product consisting of a pliable, butyl rubber compound, bonded to a high-density polyethylene film, aluminum foil, or spunbonded polyolefin to produce an overall thickness of not less than 0.025 inch .

1. Manufacturers: Subject to compliance with requirements, provide products by one of the following:
   a. DuPont de Nemours, Inc.
   b. Protecto Wrap Company.
2. Flame Propagation Test: Materials and construction to be as tested in accordance with NFPA 285.

B. Primer for Flexible Flashing: Product recommended in writing by flexible flashing manufacturer for substrate.

C. Nails and Staples: Product recommended in writing by flexible flashing manufacturer and complying with ASTM F1667.

PART 3 - EXECUTION

3.1 INSTALLATION OF WATER-RESISTIVE BARRIER

A. Cover exposed exterior surface of sheathing with water-resistive barrier securely fastened to framing immediately after sheathing is installed.

B. Cover sheathing with water-resistive barrier as follows:

1. Cut back barrier 1/2 inch on each side of the break in supporting members at expansion- or control-joint locations.
2. Apply barrier to cover vertical flashing with a minimum 4-inch overlap unless otherwise indicated.

C. Building Wrap: Comply with manufacturer's written instructions and warranty requirements.

1. Seal seams, edges, fasteners, and penetrations with tape.
2. Extend into jambs of openings and seal corners with tape.

3.2 INSTALLATION OF FLEXIBLE FLASHING

A. Apply flexible flashing where indicated to comply with manufacturer's written instructions.

1. Prime substrates as recommended by flashing manufacturer.
2. Lap seams and junctures with other materials at least 4 inches except that at flashing flanges of other construction, laps need not exceed flange width.
3. Lap flashing over water-resistive barrier at bottom and sides of openings.
4. Lap water-resistive barrier over flashing at heads of openings.

5. After flashing has been applied, roll surfaces with a hard rubber or metal roller to ensure that flashing is completely adhered to substrates.

END OF SECTION 07 2500

SECTION 07 2600 - VAPOR RETARDERS

PART 1 - GENERAL

1.1 SUMMARY

A. Section Includes:

1. Polyethylene vapor retarders.

B. Related Requirements:

1. Section 07 2100 "Thermal Insulation" for vapor retarders integral with insulation products.

1.2 ACTION SUBMITTALS

A. Product Data:

1. Polyethylene vapor retarders.

1.3 INFORMATIONAL SUBMITTALS

PART 2 - PRODUCTS

2.1 POLYETHYLENE VAPOR RETARDERS

A. Manufacturer:

1. Refer to drawings.

B. Polyethylene Vapor Retarders:Vapor Retarder membrane must meet or exceed allrequirements of ASTM E1745 Classes A, B, & C, 15-mil thick sheet, with maximum permeance rating of 0.018 perm.

1. Maximum Permeance ASTM E96: 0.018 Perms
2. Water Vapor Transmission Rate ASTM F1249 calibrated to ASTM E96 (water method): 0.007 grains/ft2/hr
3. Resistance to Organisms and Substrates in Contact with Soil ASTM E154, Section 13: 0.027 Perms
4. Tensile Strength ASTM E154, Section 9: 84 LBS. Force/Inch
5. Puncture Resistance ASTM D1709, Method B: 4,335 Grams
6. Thickness of Retarder (plastic) ACI 302.1R-96: Not less than 15 mils

2.2 ACCESSORIES

A. Vapor-Retarder Tape: Pressure-sensitive tape of type recommended by vapor-retarder manufacturer for sealing joints and penetrations in vapor retarder.

B. Adhesive for Vapor Retarders: Product recommended by vapor-retarder manufacturer and has demonstrated capability to bond vapor retarders securely to substrates indicated.

PART 3 - EXECUTION

3.1 PREPARATION

A. Clean substrates of substances that are harmful to vapor retarders, including removing projections capable of puncturing vapor retarders.

3.2 PROTECTION

A. Protect vapor retarders from damage until concealed by permanent construction.

END OF SECTION 07 2600

SECTION 07 3113 - ASPHALT SHINGLES

PART 1 - GENERAL

1.1 SUMMARY

A. Section Includes:

1. Glass-fiber-reinforced asphalt shingles.
2. Underlayment materials.
3. Metal flashing and trim.

1.2 DEFINITIONS

A. Roofing Terminology: See ASTM D1079 for definitions of terms related to roofing Work in this Section.

1.3 ACTION SUBMITTALS

A. Product Data: For the following:

1. Asphalt shingles.
2. Underlayment materials.
3. Asphalt roofing cement.
4. Elastomeric flashing sealant.

B. Shop Drawings: For metal flashing and trim.

C. Samples: For each exposed product and for each color and blend specified, in sizes indicated.

1. Asphalt Shingles: Full size.
2. Ridge and Hip Cap Shingles: Full size.
3. Ridge Vent: 12-inch- long Sample.
4. Exposed Valley Lining: 12 inches square.

D. Samples for Initial Selection:

1. For each type of asphalt shingle indicated.
2. For each type of accessory involving color selection.

E. Samples for Verification: For the following products, in sizes indicated:

1. Asphalt Shingles: Full size.
2. Ridge and Hip Cap Shingles: Full size.
3. Ridge Vent: 12-inch- long Sample.
4. Exposed Valley Lining: 12 inches square.

1.4 INFORMATIONAL SUBMITTALS

A. Sample Warranty: For manufacturer's materials warranty.

1.5 CLOSEOUT SUBMITTALS

A. Maintenance Data: For asphalt shingles to include in maintenance manuals.

B. Materials warranties.

1.6 DELIVERY, STORAGE, AND HANDLING

A. Store roofing materials in a dry, well-ventilated location protected from weather, sunlight, and moisture in accordance with manufacturer's written instructions.

B. Store underlayment rolls on end, on pallets or other raised surfaces. Do not double-stack rolls.

C. Protect unused roofing materials from weather, sunlight, and moisture when left overnight or when roofing Work is not in progress.

D. Handle, store, and place roofing materials in a manner to prevent damage to roof deck or structural supporting members.

1.7 FIELD CONDITIONS

A. Environmental Limitations: Proceed with installation only when existing and forecasted weather conditions permit product installation and related Work to be performed in accordance with manufacturer's written instructions and warranty requirements.

1. Install self-adhering, polymer-modified bitumen sheet underlayment within the range of ambient and substrate temperatures recommended in writing by manufacturer.

1.8 WARRANTY

A. Materials Warranty: Manufacturer agrees to repair or replace asphalt shingles that fail within specified warranty period.

1. Failures include, but are not limited to, the following:
   a. Manufacturing defects.
2. Materials Warranty Period: 50 years from date of Substantial Completion, prorated, with first three 10 years nonprorated.
3. Wind-Speed Warranty Period: Asphalt shingles will resist blow-off or damage caused by wind speeds of up to 130 mph for 15 years from date of Substantial Completion.
4. Algae-Resistance Warranty Period: Asphalt shingles will not discolor for five 10 years from date of Substantial Completion.

PART 2 - PRODUCTS

2.1 SOURCE LIMITATIONS

A. Obtain each type of product from single source from single manufacturer.

2.2 PERFORMANCE REQUIREMENTS

A. Exterior Fire-Test Exposure: Provide asphalt shingles and related roofing materials identical to those of assemblies tested for Class A fire resistance in accordance with ASTM E108 or UL 790 by Underwriters Laboratories or another testing and inspecting agency acceptable to authorities having jurisdiction. Identify products with appropriate markings of applicable testing agency.

B. Wind Resistance: Provide asphalt shingles that comply with requirements of ASTM D3161/D3161M, Class F, and with ASTM D7158/D7158M, Class H.

2.3 ASPHALT SHINGLES

A. Laminated-Strip Asphalt Shingles: ASTM D3462/D3462M, laminated, multi-ply overlay construction; glass-fiber reinforced, mineral-granule surfaced, and self-sealing.

1. Manufacturers: Subject to compliance with requirements, provide products by the following:
   a. GAF ARCH TIMBERLINE HDZ ALGAE RESIST
2. Butt Edge: As indicated on drawings
3. Strip Size: Manufacturer's standard .
4. Algae Resistance: Granules resist algae discoloration.
5. Color and Blends: As selected by Architect from manufacturer's full range .

B. Hip and Ridge Shingles: Manufacturer's standard units to match asphalt shingles .

2.4 UNDERLAYMENT MATERIALS

A. Organic Felt: Asphalt-saturated organic felts, nonperforated and complying with the following:

1. ASTM D226/D226M: Type II.
2. ASTM D4869/D4869M: Type III .

B. Synthetic Underlayment: UV-resistant polypropylene, polyolefin, or polyethylene polymer fabric with surface coatings or treatments to improve traction underfoot and abrasion resistance; evaluated and documented to be suitable for use as a roof underlayment under applicable codes by a testing and inspecting agency acceptable to authorities having jurisdiction.

1. Manufacturers: Subject to compliance with requirements, provide products by the following:
   a. IKO Industries Inc.

C. Self-Adhering, Polymer-Modified Bitumen Sheet: ASTM D1970/D1970M, minimum 40-mil-thick sheet; glass-fiber-mat-reinforced, polymer-modified asphalt; with slip-resistant top surface and release backing; cold applied.

1. Manufacturers: Subject to compliance with requirements, provide products by the following:
   a. IKO Industries Inc.

2.5 ACCESSORIES

A. Asphalt Roofing Cement: ASTM D4586/D4586M Type II, asbestos free.

B. Roofing Nails: ASTM F1667, aluminum, stainless steel, copper, or hot-dip galvanized-steel wire shingle nails, minimum 0.120-inch- diameter, sharp-pointed, with a 3/8- to 7/16-inch-diameter flat head and of sufficient length to penetrate 3/4 inch into solid wood decking or extend at least 1/8 inch through sheathing less than 3/4 inch thick.

1. Where nails are in contact with metal flashing, use nails made from same metal as flashing.

C. Underlayment Nails: Aluminum, stainless steel, or hot-dip galvanized-steel wire nails with low-profile metal or plastic caps, 1-inch- minimum diameter.

2.6 METAL FLASHING AND TRIM

A. Comply with requirements in Section 07 6200 "Sheet Metal Flashing and Trim."

1. Sheet Metal: Anodized aluminum unless indicated otherwise on drawings .

B. Fabricate sheet metal flashing and trim to comply with recommendations in SMACNA's "Architectural Sheet Metal Manual" that apply to design, dimensions, metal, and other characteristics of the item unless otherwise specified in this Section or indicated on Drawings.

1. Apron Flashings: Fabricate with lower flange a minimum of 4 inches over and 4 inches beyond each side of downslope asphalt shingles and 6 inches up the vertical surface.
2. Step Flashings: Fabricate with a headlap of 2 inches and a minimum extension of 4 inches over the underlying asphalt shingle and up the vertical surface.
3. Counterflashings: Fabricate to cover 4 inches of base flashing measured vertically; and in lengths required so that no step exceeds 8 inches and overall length is no more than 10 feet .
   a. Provide metal reglets for installation.
4. Drip Edges: Fabricate in lengths not exceeding 10 feet with minimum 2-inch roof-deck flange and 1-1/2-inch fascia flange with 3/8-inch drip at lower edge.
5. Vent-Pipe Flashings: ASTM B749, Type L51121, at least 1/16 inch thick. Provide lead sleeve sized to slip over and turn down into pipe, soldered to skirt at slope of roof, and extending at least 4 inches from pipe onto roof.

PART 3 - EXECUTION

3.1 EXAMINATION

A. Examine substrates, areas, and conditions, with Installer present, for compliance with requirements for installation tolerances and other conditions affecting performance of the Work.

1. Examine roof sheathing to verify that sheathing joints are supported by framing and blocking or metal clips and that installation is within flatness tolerances.
2. Verify that substrate is sound, dry, smooth, clean, sloped for drainage, and completely anchored and that provisions have been made for flashings and penetrations through asphalt shingles.
3. Verify that vent stacks and other penetrations through roofing are installed and securely fastened.

B. Prepare written report, endorsed by Installer, listing conditions detrimental to performance of the Work.

C. Proceed with installation only after unsatisfactory conditions have been corrected.

3.2 INSTALLATION OF UNDERLAYMENT MATERIALS

A. Comply with asphalt shingle and underlayment manufacturers' written installation instructions and with recommendations in NRCA's "The NRCA Roofing Manual: Steep-Slope Roof Systems" applicable to products and applications indicated unless more stringent requirements are specified in this Section or indicated on Drawings.

B. Synthetic Underlayment:

1. Install on roof deck parallel with and starting at the eaves.
    a. Lap sides and ends as recommended in writing by manufacturer, but not less than 4 inches for side laps and 6 inches for end laps.
    b. Stagger end laps between succeeding courses at interval recommended in writing by manufacturer, but not less than 72 inches.
    c. Fasten with underlayment nails in accordance with manufacturer's written instructions.
    d. Cover underlayment within period recommended in writing by manufacturer.
2. Install in double layer on roofs sloped at less than 4:12.

C. Self-Adhering, Polymer-Modified Bitumen Sheet: Install, wrinkle free, on roof deck.

1. Comply with low-temperature installation restrictions of underlayment manufacturer.
2. Install lapped in direction that sheds water.
    a. Lap sides not less than 4 inches.
    b. Lap ends not less than 6 inches, staggered 24 inches between succeeding courses.
    c. Roll laps with roller.
3. Eaves: Extend from edges of eaves 24 inches beyond interior face of exterior wall.
4. Rakes: Extend from edges of rakes 24 inches beyond interior face of exterior wall.

5. Hips: Extend 18 inches on each side.
6. Ridges: Extend 36 inches on each side.
7. Sidewalls: Extend 18 inches beyond sidewalls and return vertically against sidewalls not less than 4 inches .
8. Dormers, Chimneys, Skylights, and Other Roof-Penetrating Elements: Extend 18 inches beyond penetrating elements and return vertically against penetrating elements not less than 4 inches .
9. Roof-Slope Transitions: Extend 18 inches on each roof slope.
10. Cover underlayment within seven days.

D. Metal-Flashed, Open-Valley Underlayment: Install two layers of minimum 36-inch- wide underlayment centered in valley.

1. Use same underlayment as installed on field of roof.
2. Stagger end laps between layers at least 72 inches.
3. Lap ends of each layer at least 12 inches in direction that sheds water, and seal with asphalt roofing cement.
4. Fasten each layer to roof deck with underlayment nails located as far from valley center as possible and only to extent necessary to hold underlayment in place until installation of valley flashing.
5. Lap roof-deck underlayment over first layer of valley underlayment at least 6 inches.

3.3 INSTALLATION OF METAL FLASHING AND TRIM

A. Install metal flashings and trim to comply with requirements in Section 07 6200 "Sheet Metal Flashing and Trim."

1. Install metal flashings in accordance with recommendations in ARMA's "Asphalt Roofing Residential Manual - Design and Application Methods" and NRCA's "NRCA Guidelines for Asphalt Shingle Roof Systems."
2. Bed flanges of metal flashings using asphalt roofing cement or elastomeric flashing sealant.

B. Apron Flashings: Extend lower flange over and beyond each side of downslope asphalt shingles and up the vertical surface.

C. Step Flashings: Install with a headlap of 2 inches and extend over underlying shingle and up the vertical face.

1. Install with lower edge of flashing just upslope of, and concealed by, butt of overlying shingle.
2. Fasten to roof deck only.

D. Counterflashings: Coordinate with installation of base flashing and fit tightly to base flashing. Lap joints a minimum of 4 inches secured in a waterproof manner.

1. Install in reglets or receivers.

E. Rake Drip Edges: Install over underlayment materials and fasten to roof deck.

F. Eave Drip Edges: Install below underlayment materials and fasten to roof deck.

G. Pipe Flashings: Form flashing around pipe penetrations and asphalt shingles. Fasten and seal to asphalt shingles as recommended by manufacturer.

3.4 INSTALLATION OF ASPHALT SHINGLES

A. Install asphalt shingles in accordance with manufacturer's written instructions and recommendations in ARMA's "Asphalt Roofing Residential Manual - Design and Application Methods" and NRCA's "NRCA Guidelines for Asphalt Shingle Roof Systems."

B. Install starter strip along lowest roof edge, consisting of an asphalt shingle strip with tabs removed at least 7 inches wide with self-sealing strip face up at roof edge.

1. Extend asphalt shingles 1/2 inch over fasciae at eaves and rakes.
2. Install starter strip along rake edge.

C. Install first and remaining courses of three-tab-strip asphalt shingles stair-stepping diagonally across roof deck with manufacturer's recommended offset pattern at succeeding courses, maintaining uniform exposure.

D. Fasten asphalt shingle strips with a minimum of four roofing nails, but not less than the number indicated in manufacturer's written instructions for roof slope and design wind speed indicated on Drawings and for warranty requirements specified in this Section.

1. Locate fasteners in accordance with manufacturer's written instructions.
2. When ambient temperature during installation is below 50 deg F , hand seal self-sealing asphalt shingles by applying asphalt roofing cement spots between course overlaps after nailing the upper course.

E. Hip and Ridge Shingles: Maintain same exposure of cap shingles as roofing-shingle exposure. Lap cap shingles at ridges to shed water away from direction of prevailing winds.

1. Fasten with roofing nails of sufficient length to penetrate sheathing.

END OF SECTION 07 3113

SECTION 07 4623 - COMPOSITE SIDING

PART 1 GENERAL

1.1 SECTION INCLUDES

A. Engineered Wood Siding/Cladding.

B. Soffit Panels.

C. Trim and Fascia.

D. Accessories:
1. Fasteners.
2. Sealant.
3. Water-resistive barrier.
4. Flashing.

1.2 RELATED SECTIONS

A. Section 06 1000 - Rough Carpentry.

B. Section 06 2000 - Finish Carpentry.

C. Section 07 6200 - Sheet Metal Flashing and Trim.

1.3 REFERENCES

A. ASTM International (ASTM):
1. ASTM A 153 - Standard Specification for Zinc Coating (Hot-Dip) on Iron and Steel Hardware.
2. ASTM C 920 - Standard Specification for Elastomeric Joint Sealants.

B. American National Standards Institute (ANSI):
1. ANSI A135.6 - Engineered Wood Siding.

1.4 SUBMITTALS

A. Submit under provisions of Section 01 30 00 - Administrative Requirements.

B. Product Data:
1. Application Instructions.
2. Maintenance and Care Instructions.

C. Verification Samples: For each exposed product and texture specified, two samples,

minimum size 6 inches (152 mm) long representing actual product, color, and patterns.

D. Shop Drawings: Include details of materials, construction and finish. Include relationship with adjacent construction.

1.5 QUALITY ASSURANCE

A. Manufacturer Qualifications: Company specializing in manufacturing products specified in this section with a minimum five years documented experience.

B. Installer Qualifications: Company specializing in performing Work of this section with minimum two years documented experience with projects of similar scope and complexity.

C. Source Limitations: Provide each type of product from a single manufacturing source to ensure uniformity.

D. Mock-Up: Construct a mock-up with actual materials in sufficient time for Architect's review and to not delay construction progress. Locate mock-up as acceptable to Architect and provide temporary foundations and support.
   1. Intent of mock-up is to demonstrate quality of workmanship and visual appearance.
   2. If mock-up is not acceptable, rebuild mock-up until satisfactory results are achieved.
   3. Retain mock-up during construction as a standard for comparison with completed work.
   4. Do not alter or remove mock-up until work is completed or removal is authorized.

1.6 PRE-INSTALLATION CONFERENCE

A. Convene a conference approximately two weeks before scheduled commencement of the Work. Attendees shall include Architect, Contractor and trades involved. Agenda shall include schedule, responsibilities, critical path items and approvals.

1.7 DELIVERY, STORAGE, AND HANDLING

A. Store and handle in strict compliance with manufacturer's written application instructions and recommendations.

B. Protect from damage due to weather, excessive temperature, and construction operations.

1.8 PROJECT CONDITIONS

A. Maintain environmental conditions (temperature, humidity, and ventilation) within limits recommended by manufacturer for optimum results. Do not install products under environmental conditions outside manufacturer's recommended limits.

1.9 SEQUENCING

A. Ensure that products of this section are supplied to affected trades in time to prevent interruption of construction progress.

1.10 WARRANTY

A. Manufacturer's Warranty: Provide manufacturer's Limited Warranty.
   1. Limited Warranty Period: Fifty years, first 5 years equal to the cost of repairing or replacing, then prorated from the 6th year through the 49th year from the date of installation.

PART 2 PRODUCTS

2.1 MANUFACTURERS

A. Acceptable Manufacturer: Ekena Millwork.
B. Approved Alternates: Faux Stone Sheets: Reclaimed Wood, 2x8, DP2430-2., Forma Beyond

C. Requests for substitutions will be considered in accordance with provisions of Section 01 60 00 - Product Requirements.

2.2 ENGINEERED WOOD SIDING/CLADDING

A. Basis of Design: PN916NRWM;
   1. Panel Size: 25.8 Square Foot.
   2. Finish: Weathered Mohagany.

2.3 ACCESSORIES

A. Fasteners: ASTM A 153:
   1. Hot-dip galvanized or stainless steel nails with 0.113 inch (2.9 mm) diameter shank.
   2. Penetrate structural framing or wood structural panels and structural framing a minimum of 1-1/2 inches (38 mm).

B. Sealant: ASTM C 920, minimum Class 25 sealant.

C. Flashing:
   1. Provide flashing at window and door heads and where indicated on Drawings. Refer to Division 07 for sheet metal flashing.
   2. Material: Aluminum.

PART 3 EXECUTION

3.1 EXAMINATION

A. Do not begin installation until substrates have been properly constructed and prepared.

B. If substrate preparation is the responsibility of another installer, notify Architect in writing of unsatisfactory preparation before proceeding.

C. Verify location of concealed framing support and anchorage.

3.2 PREPARATION

A. Clean surfaces thoroughly prior to installation.

B. Prepare surfaces using the methods recommended by the manufacturer for achieving the best result for the substrate under the project conditions.

3.3 INSTALLATION

A. Install in accordance with manufacturer's application instructions approved submittals and in proper relationship with adjacent construction.
1. Install in accordance with conditions stated in ICC-ES ESR-1301 for strand substrate products and ICC-ES ESR-3090 for fiber substrate products.
2. Properly space joints to allow for equilibration.

B. Do not install over damaged or crooked materials.

C. Do not cut siding/cladding to fabricate trim; use trim components.

D. After installation, seal and flash joints, except the overlapping horizontal lap joints.

E. Seal around penetrations.

F. All wood substrate that is exposed to the weather must be sealed in a manner that prevents moisture intrusion and water build up.
1. Seal ALL exposed cuts of siding and trim. Field spray applied coatings on cuts are not recommended.
2. Sealing can be accomplished by applying a coating or sealant according to the manufacturer's requirements.
3. Butt joints that are covered with joint moldings, sealant, or factory prefinished ends are considered sealed from the weather.

3.4 CLEANING AND PROTECTION

A. Clean products in accordance with the manufacturers Care and Maintenance Instructions.

B. Touch-up, repair or replace damaged products before Substantial Completion.

END OF SECTION 07 4623

SECTION 07 6200 - SHEET METAL FLASHING AND TRIM

PART 1 - GENERAL

1.1 SUMMARY

A. Section Includes:

1. Roof-drainage sheet metal fabrications.
2. Steep-slope roof sheet metal fabrications.
3. Wall sheet metal fabrications.
4. Miscellaneous sheet metal fabrications.

B. Related Requirements:

1. Section 06 1000 "Rough Carpentry" for wood nailers, curbs, and blocking.
2. Section 07 7100 "Roof Specialties" for manufactured copings, roof-edge specialties, roof-edge drainage systems, reglets, and counterflashings.

1.2 COORDINATION

A. Coordinate sheet metal flashing and trim layout and seams with sizes and locations of penetrations to be flashed, and joints and seams in adjacent materials.

B. Coordinate sheet metal flashing and trim installation with adjoining roofing and wall materials, joints, and seams to provide leakproof, secure, and noncorrosive installation.

1.3 ACTION SUBMITTALS

A. Product Data:

1. Wall sheet metal fabrications.
2. Miscellaneous sheet metal fabrications.

B. Product Data Submittals:

1. Elastomeric sealant.
2. Butyl sealant.

C. Shop Drawings: For sheet metal flashing and trim.

1. Include plans, elevations, sections, and attachment details.
2. Detail fabrication and installation layouts, expansion-joint locations, and keyed details. Distinguish between shop- and field-assembled Work.
3. Include identification of material, thickness, weight, and finish for each item and location in Project.

4. Include details for forming, including profiles, shapes, seams, and dimensions.
5. Include details for joining, supporting, and securing, including layout and spacing of fasteners, cleats, clips, and other attachments. Include pattern of seams.
6. Include details of termination points and assemblies.
7. Include details of roof-penetration flashing.
8. Include details of edge conditions, including eaves, ridges, valleys, rakes, crickets, flashings, and counterflashings.
9. Include details of special conditions.
10. Include details of connections to adjoining work.
11. Detail formed flashing and trim at scale of not less than 1-1/2 inches per 12 inches .

D. Samples: For each exposed product and for each color and texture specified, 12 inches long by actual width.

1.4 QUALITY ASSURANCE

A. Perform work in accordance with SMACNA (ASMM) and CDA A4050 requirements and standard details, except as otherwise indicated

B. Fabricator Qualifications: Employs skilled workers who custom fabricate sheet metal flashing and trim similar to that required for this Project and whose products have a record of successful in-service performance.

1. For copings and roof edge flashings that are ANSI/SPRI/FM 4435/ES-1 tested, shop is to be listed as able to fabricate required details as tested and approved.

1.5 DELIVERY, STORAGE, AND HANDLING

A. Do not store sheet metal flashing and trim materials in contact with other materials that might cause staining, denting, or other surface damage.

1. Store sheet metal flashing and trim materials away from uncured concrete and masonry.
2. Protect stored sheet metal flashing and trim from contact with water.

B. Protect strippable protective covering on sheet metal flashing and trim from exposure to sunlight and high humidity, except to extent necessary for period of sheet metal flashing and trim installation.

PART 2 - PRODUCTS

2.1 PERFORMANCE REQUIREMENTS

A. Sheet metal flashing and trim assemblies, including cleats, anchors, and fasteners, are to withstand wind loads, structural movement, thermally induced movement, and exposure to weather without failure due to defective manufacture, fabrication, installation, or other defects

in construction. Completed sheet metal flashing and trim are not to rattle, leak, or loosen, and are to remain watertight.

B. Sheet Metal Standard for Flashing and Trim: Comply with SMACNA's "Architectural Sheet Metal Manual" requirements for dimensions and profiles shown unless more stringent requirements are indicated.

C. SPRI Wind Design Standard: Manufacture and install roof edge flashings tested in accordance with ANSI/SPRI/FM 4435/ES-1 and capable of resisting the following design pressure:

1. Design Pressure: As indicated on Drawings .

2.2 SHEET METALS

A. Protect mechanical and other finishes on exposed surfaces from damage by applying strippable, temporary protective film before shipping.

B. Aluminum Sheet: ASTM B209, alloy as standard with manufacturer for finish required, with temper as required to suit forming operations and performance required; with smooth, flat surface.

1. Exposed Coil-Coated Finish:
   a. Two-Coat Fluoropolymer: AAMA 2605. Fluoropolymer finish containing not less than 70 percent polyvinylidene fluoride (PVDF) resin by weight in color coat. Prepare, pretreat, and apply coating to exposed metal surfaces to comply with coating and resin manufacturers' written instructions.
2. Color: As selected by Architect from manufacturer's full range .
3. Concealed Finish: Pretreat with manufacturer's standard white or light-colored acrylic or polyester backer finish, consisting of prime coat and wash coat with minimum total dry film thickness of 0.5 mil.

C. Stainless Steel Sheet: ASTM A240/A240M, Type 304 , dead soft, fully annealed; with smooth, flat surface.

1. Finish: ASTM A480/A480M, No. 4 (polished directional satin) .
   a. Surface Preparation: Remove tool and die marks and stretch lines, or blend into finish.
   b. Polished Finishes: Grind and polish surfaces to produce uniform finish, free of cross scratches.
      1) Run grain of directional finishes with long dimension of each piece.
      2) When polishing is completed, passivate and rinse surfaces. Remove embedded foreign matter and leave surfaces chemically clean.

2.3 MISCELLANEOUS MATERIALS

A. Provide materials and types of fasteners, protective coatings, sealants, and other miscellaneous items as required for complete sheet metal flashing and trim installation and as recommended by manufacturer of primary sheet metal or manufactured item unless otherwise indicated.

B. Fasteners: Wood screws, annular threaded nails, self-tapping screws, self-locking rivets and bolts, and other suitable fasteners designed to withstand design loads and recommended by manufacturer of primary sheet metal or manufactured item.

1. General: Blind fasteners or self-drilling screws, gasketed, with hex-washer head.
    a. Exposed Fasteners: Heads matching color of sheet metal using plastic caps or factory-applied coating. Provide metal-backed EPDM or PVC sealing washers under heads of exposed fasteners bearing on weather side of metal.
    b. Blind Fasteners: High-strength aluminum or stainless steel rivets suitable for metal being fastened.
    c. Spikes and Ferrules: Same material as gutter; with spike with ferrule matching internal gutter width.
2. Fasteners for Aluminum Sheet: Aluminum or Series 300 stainless steel.
3. Fasteners for Stainless Steel Sheet: Series 300 stainless steel.

C. Sealant Tape: Pressure-sensitive, 100 percent solids, polyisobutylene compound sealant tape with release-paper backing. Provide permanently elastic, nonsag, nontoxic, nonstaining tape 1/2 inch wide and 1/8 inch thick.

D. Elastomeric Sealant: ASTM C920, elastomeric polyurethane polymer sealant; of type, grade, class, and use classifications required to seal joints in sheet metal flashing and trim and remain watertight.

E. Asphalt Roofing Cement: ASTM D4586/D4586M, asbestos free, of consistency required for application.

F. Reglets: Units of type, material, and profile required, formed to provide secure interlocking of separate reglet and counterflashing pieces, and compatible with flashing indicated with factory-mitered and -welded corners and junctions and with interlocking counterflashing on exterior face, of same metal as reglet.

1. Source Limitations: Obtain reglets from single source from single manufacturer.
2. Material: Aluminum, 0.024 inch thick .
3. Masonry Type: Provide with offset top flange for embedment in masonry mortar joint.
4. Accessories:
    a. Flexible-Flashing Retainer: Provide resilient plastic or rubber accessory to secure flexible flashing in reglet where clearance does not permit use of standard metal counterflashing or where Drawings show reglet without metal counterflashing.

2.4 FABRICATION, GENERAL

A. Custom fabricate sheet metal flashing and trim to comply with details indicated and recommendations in cited sheet metal standard that apply to design, dimensions, geometry, metal thickness, and other characteristics of item required.

1. Fabricate sheet metal flashing and trim in shop to greatest extent possible.
2. Fabricate sheet metal flashing and trim in thickness or weight needed to comply with performance requirements, but not less than that specified for each application and metal.

3. Verify shapes and dimensions of surfaces to be covered and obtain field measurements for accurate fit before shop fabrication.
4. Form sheet metal flashing and trim to fit substrates without excessive oil-canning, buckling, and tool marks; true to line, levels, and slopes; and with exposed edges folded back to form hems.
5. Conceal fasteners and expansion provisions where possible. Do not use exposed fasteners on faces exposed to view.

B. Fabrication Tolerances:

1. Fabricate sheet metal flashing and trim that is capable of installation to a tolerance of 1/4 inch in 20 feet on slope and location lines indicated on Drawings and within 1/8-inch offset of adjoining faces and of alignment of matching profiles.
2. Fabricate sheet metal flashing and trim that is capable of installation to tolerances specified.

C. Expansion Provisions: Form metal for thermal expansion of exposed flashing and trim.

1. Form expansion joints of intermeshing hooked flanges, not less than 1 inch deep, filled with butyl sealant concealed within joints.
2. Use lapped expansion joints only where indicated on Drawings.

D. Sealant Joints: Where movable, nonexpansion-type joints are required, form metal in accordance with cited sheet metal standard to provide for proper installation of elastomeric sealant.

E. Fabricate cleats and attachment devices from same material as accessory being anchored or from compatible, noncorrosive metal.

F. Fabricate cleats and attachment devices of sizes as recommended by cited sheet metal standard for application, but not less than thickness of metal being secured.

G. Seams:

1. Fabricate nonmoving seams with flat-lock seams. Tin edges to be seamed, form seams, and solder.
2. Fabricate nonmoving seams with flat-lock seams. Form seams and seal with elastomeric sealant unless otherwise recommended by sealant manufacturer for intended use.
3. Seams for Aluminum: Fabricate nonmoving seams with flat-lock seams. Form seams and seal with epoxy seam sealer.

H. Do not use graphite pencils to mark metal surfaces.

2.5 ROOF-DRAINAGE SHEET METAL FABRICATIONS

A. Hanging Gutters:

1. Fabricate to cross section required, complete with end pieces, outlet tubes, and other accessories as required.

2. Fabricate in minimum 96-inch- long sections.
3. Furnish flat-stock gutter brackets and flat-stock gutter spacers and straps fabricated from same metal as gutters, of size recommended by cited sheet metal standard, but with thickness not less than dimension indicated on Drawings .
4. Fabricate expansion joints, expansion-joint covers, and gutter accessories from same metal as gutters. Shop fabricate interior and exterior corners.
5. Gutter Profile: As indicated on drawings in accordance with cited sheet metal standard.
6. Expansion Joints: Butt type with cover plate .
7. Gutters with Girth up to 15 Inches (380 mm): Fabricate from the following materials:
   a. Aluminum: 0.032 inch thick.
8. Gutters with Girth 16 to 20 Inches (410 to 510 mm): Fabricate from the following materials:
   a. Aluminum: 0.040 inch thick.
9. Gutters with Girth 21 to 25 Inches (530 to 640 mm): Fabricate from the following materials:
   a. Aluminum: 0.050 inch thick.
10. Gutters with Girth 26 to 30 Inches (660 to 760 mm): Fabricate from the following materials:
    a. Aluminum: 0.063 inch thick.

B. Downspouts: Fabricate rectangular downspouts to dimensions indicated on Drawings, complete with mitered elbows. Furnish with metal hangers from same material as downspouts and anchors .

1. Hanger Style: As indicated on drawings .
2. Fabricate from the following materials:
   a. Aluminum: 0.024 inch thick.

2.6 STEEP-SLOPE ROOF SHEET METAL FABRICATIONS

A. Apron, Step, Cricket, and Backer Flashing: Fabricate from the following materials:

1. Aluminum: 0.032 inch thick.
2. Stainless Steel: 0.0156 inch thick.

B. Valley Flashing: Fabricate from the following materials:

1. Stainless Steel: 0.0188 inch thick.

C. Drip Edges: Fabricate from the following materials:

1. Aluminum: 0.032 inch thick.
2. Stainless Steel: 0.0156 inch thick.

D. Eave, Rake, Ridge, and Hip Flashing: Fabricate from the following materials:

1. Aluminum: 0.032 inch thick.
2. Stainless Steel: 0.0156 inch thick.

E. Counterflashing: Shop fabricate interior and exterior corners. Fabricate from the following materials:

1. Aluminum: 0.032 inch thick.
2. Stainless Steel: 0.0188 inch thick.

F. Flashing Receivers: Fabricate from the following materials:

1. Aluminum: 0.032 inch thick.
2. Stainless Steel: 0.0156 inch thick.

G. Roof-Penetration Flashing: Fabricate from the following materials:

1. Stainless Steel: 0.0188 inch thick.

2.7 WALL SHEET METAL FABRICATIONS

A. Through-Wall Flashing: Fabricate continuous flashings in minimum 96-inch- long, but not exceeding 12-foot- long, sections, under copings, and at shelf angles. Fabricate discontinuous lintel, sill, and similar flashings to extend 6 inches beyond each side of wall openings; and form with 2-inch- high, end dams. Fabricate from the following materials:

1. Stainless Steel: 0.0156 inch thick.

B. Opening Flashings in Frame Construction: Fabricate head, sill, and similar flashings to extend 4 inches beyond wall openings. Form head and sill flashing with 2-inch- high, end dams. Fabricate from the following materials:

1. Aluminum: 0.032 inch thick.

PART 3 - EXECUTION

3.1 EXAMINATION

A. Examine substrates, areas, and conditions, with installer present, for compliance with requirements for installation tolerances, substrate, and other conditions affecting performance of the Work.

1. Verify compliance with requirements for installation tolerances of substrates.
2. Verify that substrate is sound, dry, smooth, clean, sloped for drainage, and securely anchored.
3. Verify that air- or water-resistant barriers have been installed over sheathing or backing substrate to prevent air infiltration or water penetration.

B. Proceed with installation only after unsatisfactory conditions have been corrected.

3.2 INSTALLATION, GENERAL

A. Install sheet metal flashing and trim to comply with details indicated and recommendations of cited sheet metal standard that apply to installation characteristics required unless otherwise indicated on Drawings.

1. Install fasteners, protective coatings, separators, sealants, and other miscellaneous items as required to complete sheet metal flashing and trim system.
2. Install sheet metal flashing and trim true to line, levels, and slopes. Provide uniform, neat seams with minimum exposure of sealant.
3. Anchor sheet metal flashing and trim and other components of the Work securely in place, with provisions for thermal and structural movement.
4. Install sheet metal flashing and trim to fit substrates and to result in watertight performance.
5. Install continuous cleats with fasteners spaced not more than 12 inches o.c.
6. Space individual cleats not more than 12 inches apart. Attach each cleat with at least two fasteners. Bend tabs over fasteners.
7. Install exposed sheet metal flashing and trim with limited oil-canning, and free of buckling and tool marks.
8. Do not field cut sheet metal flashing and trim by torch.
9. Do not use graphite pencils to mark metal surfaces.

B. Metal Protection: Where dissimilar metals contact each other, or where metal contacts pressure-treated wood or other corrosive substrates, protect against galvanic action or corrosion by painting contact surfaces with bituminous coating or by other permanent separation as recommended by sheet metal manufacturer or cited sheet metal standard.

1. Coat concealed side of uncoated-aluminum and stainless steel sheet metal flashing and trim with bituminous coating where flashing and trim contact wood, ferrous metal, or cementitious construction.

C. Expansion Provisions: Provide for thermal expansion of exposed flashing and trim.

1. Space movement joints at maximum of 10 feet with no joints within 24 inches of corner or intersection.
2. Form expansion joints of intermeshing hooked flanges, not less than 1 inch deep, filled with sealant concealed within joints.
3. Use lapped expansion joints only where indicated on Drawings.

D. Fasteners: Use fastener sizes that penetrate substrate not less than recommended by fastener manufacturer to achieve maximum pull-out resistance .

E. Conceal fasteners and expansion provisions where possible in exposed work and locate to minimize possibility of leakage. Cover and seal fasteners and anchors as required for a tight installation.

F. Seal joints as required for watertight construction.

1. Use sealant-filled joints unless otherwise indicated.
   a. Embed hooked flanges of joint members not less than 1 inch into sealant.

b. Form joints to completely conceal sealant.
c. When ambient temperature at time of installation is between 40 and 70 deg F, set joint members for 50 percent movement each way.
d. Adjust setting proportionately for installation at higher ambient temperatures.
1) Do not install sealant-type joints at temperatures below 40 deg F.

2. Prepare joints and apply sealants to comply with requirements in Section 07 9200 "Joint Sealants."

G. Rivets: Rivet joints in uncoated aluminum where necessary for strength.

3.3 INSTALLATION OF ROOF-DRAINAGE SYSTEM

A. Install sheet metal roof-drainage items to produce complete roof-drainage system in accordance with cited sheet metal standard unless otherwise indicated. Coordinate installation of roof perimeter flashing with installation of roof-drainage system.

B. Hanging Gutters:

1. Join sections with joints sealed with sealant.
2. Provide for thermal expansion.
3. Attach gutters at eave or fascia to firmly anchor them in position.
4. Provide end closures and seal watertight with sealant.
5. Slope to downspouts.
6. Fasten gutter spacers to front and back of gutter.
7. Anchor and loosely lock back edge of gutter to continuous cleat .
8. Anchor back of gutter that extends onto roof deck with cleats spaced not more than 24 inches apart.
9. Anchor gutter with straps spaced not more than 24 inches apart to roof deck unless otherwise indicated, and loosely lock to front gutter bead.
10. Install gutter with expansion joints at locations indicated on Drawings, but not exceeding, 50 feet apart. Install expansion-joint caps.
11. Install continuous gutter screens on gutters with noncorrosive fasteners, removable for cleaning gutters.

C. Downspouts:

1. Join sections with 1-1/2-inch telescoping joints.
2. Provide hangers with fasteners designed to hold downspouts securely to walls.
3. Locate hangers at top and bottom and at approximately 60 inches o.c.
4. Provide elbows at base of downspout to direct water away from building.
5. Connect downspouts to underground drainage system.

D. Expansion-Joint Covers: Install expansion-joint covers at locations and of configuration indicated on Drawings. Lap joints minimum of 4 inches in direction of water flow.

3.4 INSTALLATION OF ROOF FLASHINGS

A. Install sheet metal flashing and trim to comply with performance requirements and cited sheet metal standard.

1. Provide concealed fasteners where possible, and set units true to line, levels, and slopes.
2. Install work with laps, joints, and seams that are permanently watertight and weather resistant.

B. Roof Edge Flashing:

1. Install roof edge flashings in accordance with ANSI/SPRI/FM 4435/ES-1.

C. Pipe or Post Counterflashing: Install counterflashing umbrella with close-fitting collar with top edge flared for elastomeric sealant, extending minimum of 4 inches over base flashing. Install stainless steel draw band and tighten.

D. Counterflashing: Coordinate installation of counterflashing with installation of base flashing.

1. Insert counterflashing in reglets or receivers and fit tightly to base flashing.
2. Extend counterflashing 4 inches over base flashing.
3. Lap counterflashing joints minimum of 4 inches.
4. Secure in waterproof manner by means of interlocking folded seam or blind rivets and sealant unless otherwise indicated.

E. Roof-Penetration Flashing: Coordinate installation of roof-penetration flashing with installation of roofing and other items penetrating roof. Seal with elastomeric sealant and clamp flashing to pipes that penetrate roof.

3.5 INSTALLATION OF WALL FLASHINGS

A. Install sheet metal wall flashing to intercept and exclude penetrating moisture in accordance with cited sheet metal standard unless otherwise indicated. Coordinate installation of wall flashing with installation of wall-opening components such as windows, doors, and louvers.

B. Opening Flashings in Frame Construction: Install continuous head, sill, and similar flashings to extend 4 inches beyond wall openings.

3.6 INSTALLATION OF MISCELLANEOUS FLASHING

A. Equipment Support Flashing:

1. Coordinate installation of equipment support flashing with installation of roofing and equipment.
2. Weld or seal flashing with elastomeric sealant to equipment support member.

3.7 INSTALLATION TOLERANCES

A. Installation Tolerances: Shim and align sheet metal flashing and trim within installed tolerance of 1/4 inch in 20 feet on slope and location lines indicated on Drawings and within 1/8-inch offset of adjoining faces and of alignment of matching profiles.

3.8 CLEANING

A. Clean exposed metal surfaces of substances that interfere with uniform oxidation and weathering.

B. Clean off excess sealants.

3.9 PROTECTION

A. Remove temporary protective coverings and strippable films as sheet metal flashing and trim are installed unless otherwise indicated in manufacturer's written installation instructions.

B. On completion of sheet metal flashing and trim installation, remove unused materials and clean finished surfaces as recommended in writing by sheet metal flashing and trim manufacturer.

C. Maintain sheet metal flashing and trim in clean condition during construction.

D. Replace sheet metal flashing and trim that have been damaged or that have deteriorated beyond successful repair by finish touchup or similar minor repair procedures, as determined by Architect.

END OF SECTION 07 6200

SECTION 07 9200 - JOINT SEALANTS

PART 1 - GENERAL

1.1 SUMMARY

A. Section Includes:

1. Silicone joint sealants.
2. Nonstaining silicone joint sealants.
3. Mildew-resistant joint sealants.

1.2 ACTION SUBMITTALS

A. Product Data:

1. Silicone joint sealants.
2. Nonstaining silicone joint sealants.
3. Urethane joint sealants.
4. Mildew-resistant joint sealants.

B. Samples for Initial Selection: Manufacturer's standard color charts consisting of strips of cured sealants showing the full range of colors available for each product exposed to view.

C. Joint-Sealant Schedule: Include the following information:

1. Joint-sealant application, joint location, and designation.
2. Joint-sealant manufacturer and product name.
3. Joint-sealant formulation.
4. Joint-sealant color.

1.3 CLOSEOUT SUBMITTALS

A. Manufacturers' special warranties.

1.4 QUALITY ASSURANCE

A. Installer Qualifications: Authorized representative who is trained and approved by manufacturer.

1.5 FIELD CONDITIONS

A. Do not proceed with installation of joint sealants under the following conditions:

1. When ambient and substrate temperature conditions are outside limits permitted by joint-sealant manufacturer or are below 40 deg F.
2. When joint substrates are wet.
3. Where joint widths are less than those allowed by joint-sealant manufacturer for applications indicated.
4. Where contaminants capable of interfering with adhesion have not yet been removed from joint substrates.

1.6 WARRANTY

A. Special Manufacturer's Warranty: Manufacturer agrees to furnish joint sealants to repair or replace those joint sealants that do not comply with performance and other requirements specified in this Section within specified warranty period.

1. Warranty Period: Five years from date of Substantial Completion.

PART 2 - PRODUCTS

2.1 SOURCE LIMITATIONS

A. Obtain joint sealants from single manufacturer for each sealant type.

2.2 JOINT SEALANTS, GENERAL

A. Compatibility: Provide joint sealants, backings, and other related materials that are compatible with one another and with joint substrates under conditions of service and application, as demonstrated by joint-sealant manufacturer, based on testing and field experience.

B. Colors of Exposed Joint Sealants: As selected by Architect from manufacturer's full range.

2.3 SILICONE JOINT SEALANTS

A. Silicone, S, NS, 50, NT: Single-component, nonsag, plus 50 percent and minus 50 percent movement capability, nontraffic-use, neutral-curing silicone joint sealant; ASTM C920, Type S, Grade NS, Class 50, Use NT.

1. Manufacturers: Subject to compliance with requirements, provide products by one of the following:
   a. Pecora Corporation.
   b. Sika Corporation - Building Components.
   c. The Dow Chemical Company.

2.4 NONSTAINING SILICONE JOINT SEALANTS

A. Nonstaining Joint Sealants: No staining of substrates when tested in accordance with ASTM C1248.

B. Silicone, Nonstaining, S, NS, 50, NT: Nonstaining, single-component, nonsag, plus 50 percent and minus 50 percent movement capability, nontraffic-use, neutral-curing silicone joint sealant; ASTM C920, Type S, Grade NS, Class 50, Use NT.

1. Manufacturers: Subject to compliance with requirements, provide products by one of the following:
   a. Pecora Corporation.
   b. Sika Corporation - Building Components.
   c. The Dow Chemical Company.
   d. Tremco Incorporated.

2.5 MILDEW-RESISTANT JOINT SEALANTS

A. Mildew-Resistant Joint Sealants: Formulated for prolonged exposure to humidity with fungicide to prevent mold and mildew growth.

B. Silicone, Mildew Resistant, Acid Curing, S, NS, 25, NT: Mildew-resistant, single-component, nonsag, plus 25 percent and minus 25 percent movement capability, nontraffic-use, acid-curing silicone joint sealant; ASTM C920, Type S, Grade NS, Class 25, Use NT.

1. Manufacturers: Subject to compliance with requirements, provide products by one of the following:
   a. Pecora Corporation.
   b. Sika Corporation - Building Components.
   c. The Dow Chemical Company.
   d. Tremco Incorporated.

2.6 JOINT-SEALANT BACKING

A. Sealant Backing Material, General: Nonstaining; compatible with joint substrates, sealants, primers, and other joint fillers; and approved for applications indicated by sealant manufacturer based on field experience and laboratory testing.

1. Manufacturers: Subject to compliance with requirements, provide products by one of the following:
   a. Adfast.
   b. Construction Foam Products; a division of Nomaco, Inc.
   c. Master Builders Solutions.

B. Cylindrical Sealant Backings: ASTM C1330, Type B (bicellular material with a surface skin) , and of size and density to control sealant depth and otherwise contribute to producing optimum sealant performance.

C. Bond-Breaker Tape: Polyethylene tape or other plastic tape recommended by sealant manufacturer for preventing sealant from adhering to rigid, inflexible joint-filler materials or joint surfaces at back of joint. Provide self-adhesive tape where applicable.

2.7 MISCELLANEOUS MATERIALS

A. Cleaners for Nonporous Surfaces: Chemical cleaners acceptable to manufacturers of sealants and sealant backing materials, free of oily residues or other substances capable of staining or harming joint substrates and adjacent nonporous surfaces in any way, and formulated to promote optimum adhesion of sealants to joint substrates.

B. Masking Tape: Nonstaining, nonabsorbent material compatible with joint sealants and surfaces adjacent to joints.

PART 3 - EXECUTION

3.1 EXAMINATION

A. Examine joints indicated to receive joint sealants, with Installer present, for compliance with requirements for joint configuration, installation tolerances, and other conditions affecting performance of the Work.

B. Proceed with installation only after unsatisfactory conditions have been corrected.

3.2 PREPARATION

A. Surface Cleaning of Joints: Clean out joints immediately before installing joint sealants to comply with joint-sealant manufacturer's written instructions and the following requirements:

1. Remove all foreign material from joint substrates that could interfere with adhesion of joint sealant, including dust, paints (except for permanent, protective coatings tested and approved for sealant adhesion and compatibility by sealant manufacturer), old joint sealants, oil, grease, waterproofing, water repellents, water, surface dirt, and frost.
2. Clean porous joint substrate surfaces by brushing, grinding, mechanical abrading, or a combination of these methods to produce a clean, sound substrate capable of developing optimum bond with joint sealants. Remove loose particles remaining after cleaning operations above by vacuuming or blowing out joints with oil-free compressed air. Porous joint substrates include the following:
    a. Concrete.
    b. Unglazed surfaces of ceramic tile.
    c. Exterior insulation and finish systems.
    d. Or as indicated on drawings .
3. Remove laitance and form-release agents from concrete.
4. Clean nonporous joint substrate surfaces with chemical cleaners or other means that do not stain, harm substrates, or leave residues capable of interfering with adhesion of joint sealants. Nonporous joint substrates include the following:

a. Glazed surfaces of ceramic tile.
b. Or as indicated on drawings .

B. Masking Tape: Use masking tape where required to prevent contact of sealant or primer with adjoining surfaces that otherwise would be permanently stained or damaged by such contact or by cleaning methods required to remove sealant smears. Remove tape immediately after tooling without disturbing joint seal.

3.3 INSTALLATION OF JOINT SEALANTS

A. General: Comply with joint-sealant manufacturer's written installation instructions for products and applications indicated, unless more stringent requirements apply.

B. Sealant Installation Standard: Comply with recommendations in ASTM C1193 for use of joint sealants as applicable to materials, applications, and conditions indicated.

C. Install sealant backings of type indicated to support sealants during application and at position required to produce cross-sectional shapes and depths of installed sealants relative to joint widths that allow optimum sealant movement capability.

1. Do not leave gaps between ends of sealant backings.
2. Do not stretch, twist, puncture, or tear sealant backings.
3. Remove absorbent sealant backings that have become wet before sealant application, and replace them with dry materials.

D. Install bond-breaker tape behind sealants where sealant backings are not used between sealants and backs of joints.

E. Install sealants using proven techniques that comply with the following and at the same time backings are installed:

1. Place sealants so they directly contact and fully wet joint substrates.
2. Completely fill recesses in each joint configuration.
3. Produce uniform, cross-sectional shapes and depths relative to joint widths that allow optimum sealant movement capability.

F. Tooling of Nonsag Sealants: Immediately after sealant application and before skinning or curing begins, tool sealants in accordance with requirements specified in subparagraphs below to form smooth, uniform beads of configuration indicated; to eliminate air pockets; and to ensure contact and adhesion of sealant with sides of joint.

1. Remove excess sealant from surfaces adjacent to joints.
2. Use tooling agents that are approved in writing by sealant manufacturer and that do not discolor sealants or adjacent surfaces.
3. Provide concave joint profile in accordance with Figure 8A in ASTM C1193 unless otherwise indicated.
4. Provide flush joint profile at locations indicated on Drawings in accordance with Figure 8B in ASTM C1193.

5. Provide recessed joint configuration of recess depth and at locations indicated on Drawings in accordance with Figure 8C in ASTM C1193.
   a. Use masking tape to protect surfaces adjacent to recessed tooled joints.

3.4 CLEANING

A. Clean off excess sealant or sealant smears adjacent to joints as the Work progresses by methods and with cleaning materials approved in writing by manufacturers of joint sealants and of products in which joints occur.

3.5 PROTECTION

A. Protect joint sealants during and after curing period from contact with contaminating substances and from damage resulting from construction operations or other causes so sealants are without deterioration or damage at time of Substantial Completion. If, despite such protection, damage or deterioration occurs, cut out, remove, and repair damaged or deteriorated joint sealants immediately so installations with repaired areas are indistinguishable from original work.

END OF SECTION 07 9200

SECTION 08 1113 - HOLLOW METAL DOORS AND FRAMES

PART 1 - GENERAL

1.1 RELATED DOCUMENTS

A. Drawings and general provisions of the Contract, including General and Supplementary Conditions and Division 01 Specification Sections, apply to this Section.

1.2 SUMMARY

A. Section includes:

1. Interior standard steel doors and frames.
2. Exterior standard steel doors and frames.
3. Light frames and glazing installed in hollow metal doors.

B. Related Requirements:

1. Section 08 7100 "Door Hardware" for door hardware for hollow-metal doors.

1.3 DEFINITIONS

A. Minimum Thickness: Minimum thickness of base metal without coatings according to NAAMM-HMMA 803 or ANSI/SDI A250.8.

1.4 COORDINATION

A. Coordinate anchorage installation for hollow-metal frames. Furnish setting drawings, templates, and directions for installing anchorages, including sleeves, concrete inserts, anchor bolts, and items with integral anchors. Deliver such items to Project site in time for installation.

B. Coordinate requirements for installation of door hardware, electrified door hardware, and access control and security systems.

1.5 PREINSTALLATION MEETINGS

A. Preinstallation Conference: Conduct conference at Project site.
1. Representatives of Supplier, Installer and Contractor shall be present.
2. Review proper methods and procedures for installing hollow metal doors and frames.
3. Verify installation of electrical knockout boxes and conduit at frames with electrified or access control hardware

1.6 ACTION SUBMITTALS

A. Product Data: For each type of product.

1. Include construction details, material descriptions, core descriptions, fire-resistance ratings, temperature-rise ratings, and finishes.

B. Shop Drawings: Include the following:

1. Elevations of each door type.
2. Details of doors, including vertical- and horizontal-edge details and metal thicknesses.
3. Frame details for each frame type, including dimensioned profiles and metal thicknesses.
4. Locations of reinforcement and preparations for hardware.

a. Door hardware supplier is to furnish templates, template reference number and/or physical hardware to the steel door and frame supplier in order to prepare the doors and frames to receive the finish hardware items.

5. Details of each different wall opening condition.
6. Details of electrical raceway and preparation for electrified hardware, access control systems, and security systems.
7. Details of anchorages, joints, field splices, and connections.
8. Details of accessories.
9. Details of moldings, removable stops, and glazing.

C. Product Schedule: For hollow-metal doors and frames, prepared by or under the supervision of supplier, using same reference numbers for details and openings as those on Drawings. Coordinate with final door hardware schedule.

1.7 PROJECT CONDITIONS

A. Field Measurements: Verify actual dimensions of openings by field measurements before fabrication.

1.8 DELIVERY, STORAGE, AND HANDLING

A. Deliver hollow-metal doors and frames palletized, packaged, or crated to provide protection during transit and Project-site storage. Do not use nonvented plastic.

1. Provide additional protection to prevent damage to factory-finished units.

B. Deliver welded frames with two removable spreader bars across bottom of frames, tack welded to jambs and mullions.

C. Store hollow-metal doors and frames vertically under cover at Project site with head up. Place on minimum 4-inch- high wood blocking. Provide minimum 1/4-inch space between each stacked door to permit air circulation.

1.9 WARRANTY

A. Special Warranty: Manufacturer's standard form in which manufacturer agrees to repair or replace doors that fail in materials or workmanship within specified warranty period.

B. Warranty includes installation and finishing that may be required due to repair or replacement of defective doors.

PART 2 - PRODUCTS

2.1 MANUFACTURERS

A. Manufacturers: Subject to compliance with requirements, provide products by one of the following:

1. Ceco Door; ASSA ABLOY.
2. Curries Company; ASSA ABLOY.
3. Steelcraft; an Allegion brand.
4. Or approved equal.

2.2 PERFORMANCE REQUIREMENTS

A. Fire-Rated Door Assemblies: Assemblies complying with NFPA 80 that are listed and labeled by a qualified testing agency acceptable to authorities having jurisdiction for fire-protection ratings and temperature-rise limits indicated on Drawings, based on testing at positive pressure according to NFPA 252 or UL 10C.

1. Smoke- and Draft-Control Door Assemblies: Listed and labeled for smoke and draft control by a qualified testing agency acceptable to authorities having jurisdiction, based on testing according to UL 1784 and installed in compliance with NFPA 105.
2. Oversize Fire-Rated Door Assemblies: For units exceeding sizes of tested assemblies, provide certification by a qualified testing agency that doors comply with standard construction requirements for tested and labeled fire-rated door assemblies except for size.
3. Temperature-Rise Limit: Where indicated on Drawings, provide doors that have a maximum transmitted temperature end point of not more than 450 deg F above ambient after 30 minutes of standard fire-test exposure.

B. Windborne-Debris Impact Resistance: Passes ASTM E1886 missile-impact and cyclic-pressure tests in accordance with ASTM E1996 for Wind Zone for basic protection.

C. Thermally Rated Door Assemblies: Provide door assemblies with U-factor of not more than 0.40 deg Btu/F x h x sq. ft. when tested according to ASTM C518.

2.3 FRAME ANCHORS

A. Jamb Anchors:

1. Type: Anchors of minimum size and type required by applicable door and frame standard, and suitable for performance level indicated.
2. Quantity: Minimum of three anchors per jamb, with one additional anchor for frames with no floor anchor. Provide one additional anchor for each 12 inches of frame height above 7 feet.
3. Postinstalled Expansion Anchor: Minimum 3/8-inch- diameter bolts with expansion shields or inserts, with manufacturer's standard pipe spacer.

B. Floor Anchors: Provide floor anchors for each jamb and mullion that extends to floor.

C. Floor Anchors for Concrete Slabs with Underlayment: Adjustable-type anchors with extension clips, allowing not less than 2-inch height adjustment. Terminate bottom of frames at top of underlayment.

D. Material: ASTM A879/A879M, Commercial Steel (CS), 04Z coating designation; mill phosphatized.

1. For anchors built into exterior walls, steel sheet complying with ASTM A1008/A1008M or ASTM A1011/A1011M; hot-dip galvanized according to ASTM A153/A153M, Class B.

2.4 MATERIALS

A. Cold-Rolled Steel Sheet: ASTM A1008/A1008M, Commercial Steel (CS), Type B; suitable for exposed applications.

B. Hot-Rolled Steel Sheet: ASTM A1011/A1011M, Commercial Steel (CS), Type B; free of scale, pitting, or surface defects; pickled and oiled.

C. Metallic-Coated Steel Sheet: ASTM A653/A653M, Commercial Steel (CS), Type B.

D. Inserts, Bolts, and Fasteners: Hot-dip galvanized according to ASTM A153/A153M.

E. Power-Actuated Fasteners in Concrete: Fastener system of type suitable for application indicated, fabricated from corrosion-resistant materials, with clips or other accessory devices for attaching hollow-metal frames of type indicated.

F. Mineral-Fiber Insulation: ASTM C665, Type I (blankets without membrane facing); consisting of fibers manufactured from slag or rock wool; with maximum flame-spread and smoke-developed indexes of 25 and 50, respectively; passing ASTM E136 for combustion characteristics.

G. Glazing: Comply with requirements in Section 08 8000 "Glazing."

2.5 FABRICATION

A. Hollow-Metal Frames: Fabricate in one piece except where handling and shipping limitations require multiple sections. Where frames are fabricated in sections, provide alignment plates or angles at each joint, fabricated of metal of same or greater thickness as frames.

1. Sidelite Frames: Provide closed tubular members with no visible face seams or joints, fabricated from same material as door frame. Fasten members at crossings and to jambs by welding, or by rigid mechanical anchors.
2. Provide countersunk, flat- or oval-head exposed screws and bolts for exposed fasteners unless otherwise indicated.
3. Door Silencers: Except on weather-stripped frames, drill stops to receive door silencers as follows. Keep holes clear during construction.

    a. Single-Door Frames: Drill stop in strike jamb to receive three door silencers.
    b. Double-Door Frames: Drill stop in head jamb to receive two door silencers.

B. Hardware Preparation: Factory prepare hollow-metal doors and frames to receive templated mortised hardware, and electrical wiring; include cutouts, reinforcement, mortising, drilling, and tapping according to ANSI/SDI A250.6, the Door Hardware Schedule, and templates.

1. Reinforce doors and frames to receive nontemplated, mortised, and surface-mounted door hardware.
2. Comply with BHMA A156.115 for preparing hollow-metal doors and frames for hardware.

C. Glazed Lites: Provide stops and moldings around glazed lites where indicated. Form corners of stops and moldings with mitered hairline joints.

1. Provide stops and moldings flush with face of door, and with square stops unless otherwise indicated.
2. Provide fixed frame moldings on outside of exterior and on secure side of interior doors and frames. Provide loose stops and moldings on inside of hollow-metal doors and frames.
3. Coordinate rabbet width between fixed and removable stops with glazing and installation types indicated.
4. Provide stops for installation with countersunk flat- or oval-head machine screws spaced uniformly not more than 9 inches o.c. and not more than 2 inches o.c. from each corner.

2.6 STEEL FINISHES

A. Prime Finish: Clean, pretreat, and apply manufacturer's standard primer.

1. Shop Primer: Manufacturer's standard, fast-curing, lead- and chromate-free primer complying with ANSI/SDI A250.10; recommended by primer manufacturer for substrate; compatible with substrate and field-applied coatings despite prolonged exposure.

PART 3 - EXECUTION

3.1 PREPARATION

A. Remove welded-in shipping spreaders installed at factory. Restore exposed finish by grinding, filling, and dressing, as required to make repaired area smooth, flush, and invisible on exposed faces. Touch up factory-applied finishes where spreaders are removed.

B. Drill and tap doors and frames to receive nontemplated, mortised, and surface-mounted door hardware.

3.2 INSTALLATION

A. Install hollow-metal doors and frames plumb, rigid, properly aligned, and securely fastened in place. Comply with approved Shop Drawings and with manufacturer's written instructions.

B. Hollow-Metal Frames: Comply with ANSI/SDI A250.11.

1. Set frames accurately in position; plumbed, aligned, and braced securely until permanent anchors are set. After wall construction is complete, remove temporary braces without damage to completed Work.

    a. Where frames are fabricated in sections, field splice at approved locations by welding face joint continuously; grind, fill, dress, and make splice smooth, flush, and invisible on exposed faces. Touch-up finishes.
    b. Install frames with removable stops located on secure side of opening.

2. Fire-Rated Openings: Install frames according to NFPA 80.
3. Floor Anchors: Secure with postinstalled expansion anchors.

    a. Floor anchors may be set with power-actuated fasteners instead of postinstalled expansion anchors if so indicated and approved on Shop Drawings.

4. Solidly pack mineral-fiber insulation inside frames.
5. In-Place Concrete or Masonry Construction: Secure frames in place with postinstalled expansion anchors. Countersink anchors, and fill and make smooth, flush, and invisible on exposed faces.
6. Installation Tolerances: Adjust hollow-metal frames to the following tolerances:

    a. Squareness: Plus or minus 1/16 inch, measured at door rabbet on a line 90 degrees from jamb perpendicular to frame head.
    b. Alignment: Plus or minus 1/16 inch, measured at jambs on a horizontal line parallel to plane of wall.
    c. Twist: Plus or minus 1/16 inch, measured at opposite face corners of jambs on parallel lines, and perpendicular to plane of wall.
    d. Plumbness: Plus or minus 1/16 inch, measured at jambs at floor.

C. Hollow-Metal Doors: Fit and adjust hollow-metal doors accurately in frames, within clearances specified below.

1. Non-Fire-Rated Steel Doors: Comply with ANSI/SDI A250.8.
2. Fire-Rated Doors: Install doors with clearances according to NFPA 80.
3. Smoke-Control Doors: Install doors according to NFPA 105.

D. Glazing: Comply with installation requirements in Section 08 8000 "Glazing" and with hollow-metal manufacturer's written instructions.

3.3 FIELD QUALITY CONTROL

A. Inspection Agency: Engage a qualified inspector to perform inspections and to furnish reports to Architect.

B. Inspections:

1. Fire-Rated Door Inspections: Inspect each fire-rated door according to NFPA 80, Section 5.2.
2. Egress Door Inspections: Inspect each door equipped with panic hardware, each door equipped with fire exit hardware, each door located in an exit enclosure, each electrically controlled egress door, and each door equipped with special locking arrangements according to NFPA 101, Section 7.2.1.15.

C. Repair or remove and replace installations where inspections indicate that they do not comply with specified requirements.

D. Reinspect repaired or replaced installations to determine if replaced or repaired door assembly installations comply with specified requirements.

E. Prepare and submit separate inspection report for each fire-rated door assembly indicating compliance with each item listed in NFPA 80 and NFPA 101.

3.4 REPAIR

A. Prime-Coat Touchup: Immediately after erection, sand smooth rusted or damaged areas of prime coat and apply touchup of compatible air-drying, rust-inhibitive primer.

B. Metallic-Coated Surface Touchup: Clean abraded areas and repair with galvanizing repair paint according to manufacturer's written instructions.

C. Touchup Painting: Cleaning and touchup painting of abraded areas of paint are specified in painting Sections.

END OF SECTION 08 11 13

SECTION 08 3113 - ACCESS DOORS AND FRAMES

PART 1 - GENERAL

1.1 SUMMARY

A. Section Includes:

1. Access doors and frames.

1.2 ACTION SUBMITTALS

A. Product Data: For each type of product.

1. Include construction details , fire ratings, material descriptions, dimensions of individual components and profiles, and finishes.

B. Samples: For each type of access door and frame and for each finish specified, complete assembly minimum 6 by 6 inches in size.

C. Product Schedule: For access doors and frames. Use same designations indicated on Drawings.

1.3 CLOSEOUT SUBMITTALS

A. Record Documents: For fire-rated doors, list of applicable room name and number in which access door is located.

PART 2 - PRODUCTS

2.1 PERFORMANCE REQUIREMENTS

A. Fire-Rated Access Doors and Frames: Assemblies complying with NFPA 80 that are listed and labeled by a qualified testing agency, for fire-protection ratings indicated, according to NFPA 252 or UL 10B.

2.2 ACCESS DOORS AND FRAMES

A. Flush Access Doors with Exposed Flanges:

1. Manufacturers: Subject to compliance with requirements, provide products by one of the following:
   a. ACUDOR Products, Inc.
   b. Babcock-Davis.
   c. Elmdor; Morris Group International, Inc.
2. Description: Face of door flush with frame, with exposed flange and concealed hinge.
3. Optional Features: Piano hinges, Masonry anchors, where required .
4. Locations: Wall and ceiling .
5. Door Size: As indicated on drawings but not less that 12 inches by 12 inches .
6. Uncoated Steel Sheet for Door: Nominal 0.060 inch , 16 gage , factory primed finished.
7. Frame Material: Same material, thickness, and finish as door .
8. Latch and Lock: As indicated on Drawings with interior release.

2.3 MATERIALS

A. Steel Plates, Shapes, and Bars: ASTM A36/A36M.

B. Steel Sheet: Uncoated or electrolytic zinc coated, ASTM A879/A879M, with cold-rolled steel sheet substrate complying with ASTM A1008/A1008M, Commercial Steel (CS), exposed.

C. Metallic-Coated Steel Sheet: ASTM A653/A653M, Commercial Steel (CS), Type B; with minimum G60 or A60 metallic coating.

D. Stainless Steel Plate, Sheet, and Strip: ASTM A240/A240M or ASTM A666, Type 304 . Remove tool and die marks and stretch lines, or blend into finish.

E. Stainless Steel Flat Bars: ASTM A666, Type 304 . Remove tool and die marks and stretch lines, or blend into finish.

F. Aluminum Extrusions: ASTM B221, Alloy 6063.

G. Aluminum Sheet: ASTM B209, alloy and temper recommended by aluminum producer and finisher for type of use and finish indicated.

H. Frame Anchors: Same material as door face.

I. Inserts, Bolts, and Anchor Fasteners: Hot-dip galvanized steel according to ASTM A153/A153M or ASTM F2329.

2.4 FABRICATION

A. General: Provide access door and frame assemblies manufactured as integral units ready for installation.

B. Metal Surfaces: For metal surfaces exposed to view in the completed Work, provide materials with smooth, flat surfaces without blemishes. Do not use materials with exposed pitting, seam marks, roller marks, rolled trade names, or roughness.

C. Doors and Frames: Grind exposed welds smooth and flush with adjacent surfaces. Furnish mounting holes, attachment devices and fasteners of type required to secure access doors to types of supports indicated.

D. Latch and Lock Hardware:

1. Quantity: Furnish number of latches and locks required to hold doors tightly closed.
2. Keys: Furnish two keys per lock and key all locks alike.
3. Mortise Cylinder Preparation: Where indicated, prepare door panel to accept cylinder specified in Section 08 7100 "Door Hardware."

2.5 FINISHES

A. Comply with NAAMM's "Metal Finishes Manual for Architectural and Metal Products" for recommendations for applying and designating finishes.

B. Protect mechanical finishes on exposed surfaces from damage by applying a strippable, temporary protective covering before shipping.

C. Appearance of Finished Work: Noticeable variations in same piece are not acceptable. Variations in appearance of adjoining components are acceptable if they are within the range of approved Samples and are assembled or installed to minimize contrast.

D. Painted Finishes: Comply with coating manufacturer's written instructions for cleaning, conversion coating, and applying and baking finish.

1. Factory Primed: Apply manufacturer's standard, lead- and chromate-free, universal primer immediately after surface preparation and pretreatment.
2. Factory Finished: Apply manufacturer's standard baked-enamel or powder-coat finish immediately after cleaning and pretreating, with minimum dry-film thickness of 1 mil for topcoat.
    a. Color: As selected by Architect from full range of industry colors .

PART 3 - EXECUTION

3.1 EXAMINATION

A. Examine substrates for compliance with requirements for installation tolerances and other conditions affecting performance of the Work.

B. Proceed with installation only after unsatisfactory conditions have been corrected.

3.2 INSTALLATION

A. Comply with manufacturer's written instructions for installing access doors and frames.

3.3 ADJUSTING

A. Adjust doors and hardware, after installation, for proper operation.

END OF SECTION 08 3113

SECTION 08 5413 - FIBERGLASS FIXED FRAME WINDOWS

PART 1 GENERAL

1.1 SECTION INCLUDES

A. Fiberglass fixed frame windows.

1.2 RELATED SECTIONS

A. Section 07270 (07 2700) - Air Barriers: Water-resistant barrier.

B. Section 07920 (07 9200) - Joint Sealants: Sealants and caulking.

1.3 REFERENCES

A. American Architectural Manufacturers Association (AAMA):
   1. AAMA 502 - Voluntary Specification for Field Testing of Windows and Sliding Doors.
   2. AAMA 624 - Voluntary Performance Requirements and Test Procedures for Organic Coatings on Fiber Reinforced Thermoset Profiles.

B. American Society for Testing and Materials (ASTM):
   1. ASTM C 1036 - Flat Glass.
   2. ASTM C 1048 - Heat-Treated Flat Glass--Kind HS, Kind FT Coated and Uncoated Glass.
   3. ASTM E 283 - Rate of Air Leakage Through Exterior Windows, Curtain Walls and Doors Under Specified Pressure Difference Across the Specimen.
   4. ASTM E 547 - Water Penetration of Exterior Windows, Curtain Walls and Doors by Cyclic Static Air Pressure Differential.
   5. ASTM E 1105 – Standard Test Method for Field Determination of Water Penetration of Exterior Windows, Doors, Skylights and Curtain Walls by Uniform Static Air Pressure Difference.

C. Window and Door Manufacturers Association (WDMA):
   1. ANSI/AAMA/NWWDA 101/I.S.2 - Voluntary Specifications for Aluminum, Vinyl (PVC) and Wood Windows and Glass Doors.

1.4 PERFORMANCE REQUIREMENTS

A. Windows shall meet Rating FW-CW-PG 50 specifications in accordance with ANSI/AAMA/NWWDA 101/I.S.2/A440-08 or ANSI/AAMA/WDMA 101/I.S.2/A440-11.

B. Window Air Leakage, ASTM E 283: Window air leakage when tested at 1.57 psf (25 mph) shall be 0.05 cfm/ft^2 of frame or less.

C. Window Water Penetration, ASTM E 547: No water penetration through window when tested under static pressure of 7.5 psf (54 mph) after 4 cycles of 5 minutes each, with water being applied at a rate of 5 gallons per hour per square foot.

D. Factory Mullion Structural Performance (Per IBC Section 16, IBC Section 24, and AAMA 450): [Structural performance of mullions at project Design Pressure shall be validated by testing] [Deflection of mullions shall be engineered to L/175 or 3/4" max. at project design pressure (CW/AW Performance)].

1.5 SUBMITTALS

A. Submit in accordance with Division 1 requirements.

B. Product Data: Submit manufacturer's product data, including installation instructions.

C. Shop Drawings: Submit manufacturer's shop drawings, indicating dimensions, construction, component connections and locations, anchorage methods and locations, hardware locations, and installation details.

1.7 DELIVERY, STORAGE, AND HANDLING

A. Delivery: Deliver materials to site undamaged in manufacturer's or sales branch's original, unopened containers and packaging, with labels clearly identifying manufacturer and product name. Include installation instructions.

B. Storage:
1. Store materials in accordance with manufacturer's instructions.
2. Store materials off ground and under cover.
3. Protect materials from weather, direct sunlight, and construction activities.

C. Handling: Protect materials and finish during handling and installation to prevent damage.

PART 2 PRODUCTS

2.1 MANUFACTURER

A. Pella Corporation, 102 Main Street, Pella, Iowa 50219. Contact Jacqueline V Pagel, 401-500-5249, jpagel@gopella.com website www.pella.com.

2.2 FIBERGLASS FIXED FRAME WINDOWS

A. Fixed Frame Windows: Pella Impervia.
1. Factory-assembled fixed frame window.
2. Frame Material: 5-layer, pultruded-fiberglass material, reinforced with interlocking mat.

B. Frame:
   1. Type: Block frame.
   2. Interior and Exterior Frame: Pultruded, fiberglass composite [with foam inserts].
   3. Overall Frame Depth: 3-1/4 inches.
   4. Nominal Wall Thickness of Fiberglass Members: 0.070 inch to 0.135 inch.
   5. Frame Corners:
      a. Mitered.
      b. Joined and bonded with nylon corner lock, and mechanical fasteners, and injected with polyurethane adhesive sealant.
   6. Weep system at sill to channel incidental moisture to the exterior.

C. Glazing:
   1. Float Glass: ASTM C 1036, Quality 1.
      a. Tempered Glass: ASTM C 1048.

   2. Type: Polyurethane reactive (PUR) hot-melt glazed, dual-pane 1-inch, dual-seal, tempered insulating glass, multi-layer Low-E coated with argon.

2.4 TOLERANCES

A. Windows shall accommodate the following opening tolerances:
   1. Vertical Dimensions Between High and Low Points: Plus 1/4-inch, minus 0 inch.
   2. Width Dimensions: Plus 1/4-inch, minus 0 inch.
   3. Building Columns or Masonry Openings: Plus or minus 1/4-inch from plumb.

2.5 FINISH

A. Exterior and Interior Finish: Factory-applied powder-coat paint, comply with AAMA 624.
   1. Color: Black

2.6 INSTALLATION ACCESSORIES

A. Flashing/Sealant Tape: Pella SmartFlash.
   1. Aluminum-foil-backed butyl window and door flashing tape.
   2. Maximum Total Thickness: 0.013 inch.
   3. UV resistant.
   4. Verify sealant compatibility with sealant manufacturer.

B. Exterior Perimeter Sealant: “Pella Window and Door Installation Sealant” or equivalent high quality, multi-purpose sealant as specified in the joints sealant section.

PART 3 EXECUTION

3.1 EXAMINATION

A. Examine areas to receive windows. Notify Architect of conditions that would adversely affect installation or subsequent use. Do not proceed with installation until unsatisfactory conditions are corrected.

3.2 INSTALLATION

A. Install windows in accordance with manufacturer's instructions.

B. Install windows to be weather-tight.

C. Maintain alignment with adjacent work.

D. Secure assembly to framed openings, plumb and square, without distortion.

E. Integrate window system installation with exterior water-resistant barrier using flashing/sealant tape. Apply and integrate flashing/sealant tape with water-resistant barrier using watershed principles in accordance with window manufacturer's instructions.

F. Place interior seal around window perimeter to maintain continuity of building thermal and air barrier using insulating foam sealant.

G. Seal window to exterior wall cladding with sealant and related backing materials at perimeter of assembly.

3.3 CLEANING

A. Clean window frames and glass in accordance with Division 1 requirements.

B. Do not use harsh cleaning materials or methods that would damage finish or glass.

C. Remove labels and visible markings.

3.4 PROTECTION

A. Protect installed windows to ensure that, except for normal weathering, windows will be without damage or deterioration at time of substantial completion.

END OF SECTION 08 5413

SECTION 08 71 00 - DOOR HARDWARE

PART 1 - GENERAL

1.1 SUMMARY

A. Section Includes: Door hardware for wood doors, steel doors, aluminum framed entrance doors, all glass entrance doors, and miscellaneous hardware items.

B. Provide hardware not described herein but otherwise required for proper completion of the project, conforming to size, function, quality, and finish of other specified hardware.

1.2 REFERENCED STANDARDS

A. American National Standards Institute (ANSI):
1. ANSI A117.1 Accessible and Usable Buildings and Facilities

B. Builders Hardware Manufacturers Association (BHMA):
1. ANSI/BHMA A156.1 Butts and Hinges.
2. ANSI/BHMA A156.2 Bored and Preassembled Locks and Latches.
3. ANSI/BHMA A156.3 Exit Devices.
4. ANSI/BHMA A156.4 Door Controls - Closers.
5. ANSI/BHMA A156.5 Auxiliary Locks and Associated Products.
6. ANSI/BHMA A156.6 Architectural Door Trim.
7. ANSI/BHMA A156.7 Template Hinge Dimensions.
8. ANSI/BHMA A156.8 Door Controls - Overhead Stops and Holders.
9. ANSI/BHMA A156.10 Power Operated Pedestrian Doors.
10. ANSI/BHMA A156.13 Mortise Locks and Latches.
11. ANSI/BHMA A156.14 Sliding and Folding Door Hardware.
12. ANSI/BHMA A156.15 Release Devices: Closer Holders, Electromagnetic and Electromechanical.
13. ANSI/BHMA A156.16 Auxiliary Hardware.
14. ANSI/BHMA A156.17 Self-Closing Hinges and Pivots.
15. ANSI/BHMA A156.18 Materials & Finishes.
16. ANSI/BHMA A156.19 Power Assist & Low Energy Power Operated Doors.
17. ANSI/BHMA A156.21 Thresholds.
18. ANSI/BHMA A156.22 Door Gasketing and Edge Seal Systems.
19. ANSI/BHMA A156.23 Electromagnetic Locks.
20. ANSI/BHMA A156.24 Delayed Egress Locks.
21. ANSI/BHMA A156.25 Electrified Locking Devices.
22. ANSI/BHMA A156.26 Continuous Hinges.
23. ANSI/BHMA A156.28 Recommended Practices for Mechanical Keying Systems.
24. ANSI/BHMA A156.29 Exit Locks, Exit Locks with Exit Alarms, Exit Alarms, Alarms for Exit.
25. ANSI/BHMA A156.30 High Security Cylinders.
26. ANSI/BHMA A156.31 Electrified Strikes and Frame Mounted Activators.
27. ANSI/BHMA A156.115 Hardware Preparation in Steel Doors with Steel Frames.

28. ANSI/BHMA A156.115W Hardware Preparation in Wood Doors with Wood or Steel Frames.

C. Door and Hardware Institute (DHI):
1. ANSI/DHI A115.IG Installation Guide for Doors and Hardware
2. DHI Keying Systems and Nomenclature
3. DHI Sequence and Format for the Hardware Schedule

D. International Building Code (IBC)

E. National Fire Protection Association (NFPA):
1. NFPA 80 Fire Doors and Other Opening Protectives
2. NFPA 252 Fire Tests of Door Assemblies

F. Underwriters Laboratories Inc. (UL):
1. UL 10C Positive Pressure Fire Tests Of Door Assemblies
2. UL 305 Panic Hardware
3. UL 437 Drill and Pick Resistant Key Cylinders
4. UL 1034 Burglary-Resistant Electric Locking Mechanisms

1.3 SUBMITTALS

A. Products other than those designated herein must be approved as substitutions prior to submittal of Door Hardware.

B. Door Hardware Schedule: Vertical format conforming to DHI "Sequence and Format for the Hardware Schedule." Horizontal format schedules will be rejected without review. Format shall be 8-1/2 by 11 inch page size. Organize Schedule into headings, grouping doors to receive same hardware items, indicating quantity and complete designations of every item required for each door opening. The schedule shall include:
1. Cover sheet indicating name and location of Project; name of Architect; name of Contractor; name, address and phone of hardware supplier, name of hardware consultant preparing the schedule; date of submittal or revised submittal.
2. A list of abbreviations used in schedule.
3. An index of door openings, listed in numerical order, with hardware heading identification cross-referenced to Architect's set identification.
4. Hardware headings shall be listed in numerical order corresponding, as closely as possible, with numerical order of Architect's set numbers.
5. Each hardware heading shall have each door listed in numerical order according to door numbers in the Architect's door schedule, and denoting: location, configuration (single, pair, etc.), type (elevation, etc.), door and frame size(s), door and frame material(s), handing, fire rating, and key set identification.
6. Type, complete model number, style, function, size, hand, and finish of each door hardware item.
7. Manufacturer of each item.
8. Fastenings and other pertinent information.
9. System Description of Operation. Include description of component functions including, but not limited to, the following situations: normal secured/unsecured state of door; authorized access; authorized egress; unauthorized access; unauthorized egress; fire alarm and loss of power conditions, and interfaces with other building control systems.

C. Manufacturer's Technical Product Data / Catalog Cut Sheets: Clearly marked for each hardware item, including installation details, material descriptions, dimensions of individual components and profiles, and finishes. Format shall be 8-1/2 by 11 inch page size.

D. Wiring Diagrams: No later than 14 days after receipt of reviewed hardware schedule submittal, submit detailed wiring diagrams for power, signaling, monitoring, and control of the access control system electrified hardware; identified by door number(s), and detailed specifically for each type and function of electrified door opening. Format shall be 8-1/2 by 11 inch page size. Include the following:
1. System Description of Operation. Include description of component functions including, but not limited to, the following situations: normal secured/unsecured state of door; authorized access; authorized egress; unauthorized access; unauthorized egress; fire alarm and loss of power conditions, and interfaces with other building control systems.
2. Elevation single-line diagram, showing interface between electrified door hardware and fire alarm, power, access control, and security systems as applicable.
3. Point-to-point wiring diagram for field-installed wiring.

E. Keying Schedule: In accordance with Owner's final keying instructions for locks. Conform to DHI “Keying Systems and Nomenclature.” Format shall be 8-1/2 by 11 inch page size.

F. Operation and Maintenance Data: Provide complete operating and maintenance instructions listing routine maintenance procedures, possible breakdowns and repairs, and troubleshooting guides.

G. Qualification Data: For firms and persons specified in "Quality Assurance" Article.

H. Warranties: Special warranties specified in this Section.

1.4 QUALITY ASSURANCE

A. Obtain each type and variety of door hardware from a single manufacturer, unless otherwise indicated.

B. Manufacturers, Hardware Supplier, and Installer shall have no less than five years experience in the provision of Door Hardware for projects similar in size, complexity and type to this Project.

C. Hardware Schedule and Keying Schedule submittals shall be prepared by a Hardware Consultant holding the credentials of Architectural Hardware Consultant (AHC) issued by the Door and Hardware Institute. Hardware Consultant shall have no less than five years experience in the scheduling of Door Hardware for projects similar in size, complexity and type to this Project; and shall be available, at no additional cost, during the course of the Work to consult with Contractor, Architect, and Owner regarding door hardware and keying.

D. Pre-Submittal Conference: Conduct coordination conference in compliance with requirements in Division 01 Section "Project Meetings" with attendance by representatives of Supplier(s), Installer(s), and Contractor(s) to review proper methods and the procedures for receiving, handling, and installing door hardware.
   1. Prior to installation of door hardware, conduct a project specific training meeting to instruct the installing contractors' personnel on the proper installation and adjustment of their respective products. Product training to be attended by installers of door hardware (including electromechanical hardware) for aluminum, hollow metal and wood doors. Training will include the use of installation manuals, hardware schedules, templates and physical product samples as required.
   2. Inspect and discuss electrical roughing-in, power supply connections, and other preparatory work performed by other trades.
   3. Review sequence of operation narratives for each unique access controlled opening.
   4. Review and finalize construction schedule and verify availability of materials.
   5. Review the required inspecting, testing, commissioning, and demonstration procedures

1.5 REGULATORY REQUIREMENTS

A. Fire-Rated Door Assemblies: Provide door hardware for assemblies complying with all applicable regulations, listed and labeled by a testing and inspecting agency acceptable to authorities having jurisdiction.
   1. At rated doors with panic exit devices, provide devices labeled as “Fire Exit Device.”

B. Comply with all applicable accessibility regulations as set forth in Americans with Disabilities Act (ADA) -- Accessibility Guidelines for Buildings and Facilities (ADAAG) and ANSI A117.1 as applicable.

C. Latching and locking doors that are hand-activated and that are in a path of travel shall be operable with a single effort by lever-type hardware, panic bars, push-pull activating bars, or other hardware designed to be easy to grasp with one hand, not requiring tight grasping, tight pinching or twisting of the wrist; from egress side shall not require the use of a key, tool, or special knowledge for operation.
   1. All hand-activated hardware shall be mounted between 34 inches and 48 inches above finished floor.

D. At sliding doors, when fully open, operating hardware shall be exposed and usable from both sides.

E. Door closing devices shall comply with the following maximum opening-force requirements:
   1. Interior Hinged Doors: 5 lbf applied perpendicular to door at latch.
   2. Sliding or Folding Doors: 5 lbf applied parallel to door at latch.
   3. Fire Rated Doors: 5 lbf applied perpendicular to door at latch. To insure latching, may be increased to the minimum force allowable by the appropriate administrative authority, not to exceed 15 lbf.

F. Where door closers are provided, adjust sweep speed so that from an open position of 90 degrees, the time required to move the door to a position of 12 degrees from the latch is 5 seconds minimum.

G. Thresholds shall be maximum 1/2 inch in height above floor and landing on both sides of openings. Bevel raised thresholds with a slope of not more than 1:2.

1.6 DELIVERY, STORAGE, AND HANDLING

A. Each article of hardware shall be delivered individually packaged in the manufacturer's standard commercial carton or container, and shall be properly marked or labeled to be readily identifiable with the approved hardware schedule.

B. Manufacturer's printed installation instructions, fasteners, and special tools shall be included in each package.

C. Hardware shall be stored in a dry, secure locked area, complete with shelving for unpacking and sorting of the door hardware.

D. Deliver all master keys by restricted, receipted delivery directly from the manufacturer to the Owner.

1.7 COORDINATION

A. Provide hardware templates to the parties involved for doors, frames, and other work specified to be factory prepared for door hardware. Check Shop Drawings of other work to confirm that adequate provisions are made for locating and installing door hardware to comply with indicated requirements.

B. When required by door or frame fabricator, furnish physical samples of each mortised and recessed hardware item required.

C. Coordinate layout and installation of recessed pivots and closers with floor construction.

D. Electrical System Rough-in: Coordinate layout and installation of electrified door hardware with connections to power supplies, fire alarm system and detection devices, access control system, and security system as applicable.

E. Pre-Installation Conference: Arrange conference at job site to coordinate door, frame, hardware and electronic security hardware installation; to be attended by the Architect, Owner, Contractor and representative personnel of firms involved in the provision and installation of said items.

F. Keying Conference: Arrange conference with Owner, or designated representative, and Manufacturer’s/ Hardware Supplier’s Architectural Hardware Consultant to establish keying requirements. Incorporate keying conference decisions into Keying Schedule.

1.8 WARRANTY

A. In addition to, and not precluding, other warranty requirements in the Contract Documents, the following hardware items shall carry extended minimum warranties as indicated:
1. Hinges: Ten years from date of Substantial Completion.

2. Locks: Five years from date of Substantial Completion.
3. Exit Devices: Three years from date of Substantial Completion.
4. Door Closers: Ten years from date of Substantial Completion.

1.9 MAINTENANCE

A. Furnish a complete set of specialized tools and maintenance instructions as needed for Owner's continued adjustment, maintenance, and removal and replacement of door hardware.

PART 2 - PRODUCTS

2.1 ACCEPTABLE MANUFACTURERS

1. Refer to drawings.

2.2 MATERIALS AND FABRICATION

A. Requirements for grade, materials, size, and other distinctive qualities of each type of door hardware are indicated herein. Furnish items in types, sizes or weight, in accordance with manufacturer's standards, appropriate for the conditions of installation and service, unless otherwise indicated.

B. Products named or identified by make or model number, or other designation and described herein are base products. Base products establish the standards of type, in-service performance, physical properties, appearance, warranty, cost, and other characteristics required by the Project.

2.3 FASTENERS

A. Provide concealed fasteners for hardware items on exterior doors which are exposed when door is closed.

B. Combination machine screws and expansion shields shall be used for attaching hardware to concrete or masonry.

C. Fasteners exposed to the weather in the finished work shall be of brass, bronze, or stainless steel.

2.4 BUTT HINGES

A. Butt hinges shall meet ANSI/BHMA A156.1 requirements.

B. Hinge dimensions shall conform to ANSI/BHMA A156.7.

C. Base Metal shall be steel plated for fire-rated doors; bronze or stainless steel for exterior outswinging doors; bronze or plated steel elsewhere as scheduled.

D. Provide hinges with antifriction bearings for doors with closers.

E. Unless otherwise indicated, provide hinges in heights as follows:
1. Doors to 36 inches wide: 4-1/2 inches.
2. Doors over 36 inches to 48 inches wide: 5 inches.
3. Doors over 48 inches wide: 6 inches.

4. Doors over 1-3/4 inch thick shall be per hinge manufacturers published listings or recommendations.

F. Provide in minimum width sufficient to clear trim when door swings 180 degrees, whether or not shown on Drawings to swing 180 degrees.

G. Number of hinges per leaf shall be as follows:
1. Doors to 60 inches in height: 2 hinges.
2. Doors over 60 to 90 inches in height: 3 hinges.
3. Doors over 90 to 120 inches in height: 4 hinges.
4. For doors over 120 inches in height: 4 hinges plus 1 hinge for every 30 inches, or fraction thereof, door height greater than 120 inches.

H. Screws: Flat head wood screws not less than 1-1/2 inches long for hinges for wood doors; flat head machine screws elsewhere.

I. Hinges for reverse bevel doors with locks shall have pins that are made non-removable when the door is in the closed position by means of a set screw in the hinge pin barrel.

2.5 CYLINDERS, KEYING AND KEY STORAGE

A. Lock cylinders shall meet ANSI/BHMA A156.5 requirements.

B. Keying system shall meet ANSI/BHMA A156.28 requirements.

C. Keying shall be provided to integrate with existing system as directed.

D. Cylinders shall be keyed according to approved Keying Schedule.

E. Provide a temporary keying system for interim use during construction.

F. Provide change keys in individual envelopes for each cylinder delivered. Envelopes shall be marked with respective door identification numbers.

G. Key set symbol, and inscription "Do Not Duplicate" shall be stamped on all keys.

H. Keys shall be supplied as follows:
1. Locks: 3 change keys each lock.
2. Master keyed sets: 2 keys each set.
3. Grand master keys: 5 total.
4. Great Grand master keys: 5 total.
5. Interchangeable Core control keys: 2 total.
6. Construction keys: 10 total.
7. Blank keys: 100 total.

2.6 LOCKSETS AND LATCHSETS

A. Mortise Locks and Latches shall meet ANSI/BHMA A156.13 Grade 1 requirements.

B. Cylindrical Locks and Latches shall meet ANSI/BHMA A156.2 Series 4000 Grade 1 requirements.

C. Interconnected Locks and Latches shall meet ANSI/BHMA A156.12 requirements.

D. Auxiliary Locks shall meet ANSI/BHMA A156.5 requirements.

E. Electrified Locks shall also meet ANSI/BHMA A156.25 requirements.

F. Operating trim shall be lever type: Refer to hardware sets.

G. Lock functions which include thumb turn trim shall be provided with thumb turns compliant with accessibility code requirements.

H. Lock Throw: Comply with requirements for length of latch bolts to comply with labeled fire door requirements.

I. Lock backset shall be 2-3/4 inches unless otherwise indicated.

J. Where thumb turns are used, thumb turns to meet ANSI 117.1 requirements and be listed as meeting Accessibility requirements.

K. Provide curved-lip strike with dust box for each latch or lock bolt, with lip extended to protect frame, finished to match door hardware set, unless otherwise indicated.

L. Electromechanical locksets utilized at fire rated openings shall be listed and labeled by a testing agency acceptable to authorities having jurisdiction, and shall maintain door in positive latched position when power is off.

2.7 EXIT DEVICES

A. Exit devices and exit device accessories shall meet ANSI/BHMA A156.3, Grade 1 requirements.

B. Electromechanical exit devices shall also meet ANSI/BHMA A156.25 requirements.

C. Panic Exit Devices: Listed and labeled by a testing and inspecting agency acceptable to authorities having jurisdiction, for panic protection, based on testing according to UL 305.

D. Fire Exit Devices: Complying with NFPA 80 that are listed and labeled by a testing and inspecting agency acceptable to authorities having jurisdiction, for fire and panic protection, based on testing according to UL 305 and NFPA 252.

E. Outside Trim: Design, material and finish to match locksets, unless otherwise indicated.

F. Adjustable strikes shall be provided for rim type and vertical rod devices.

G. Fire Exit Removable Mullions: Where indicated, provide removable mullions for use with fire exit devices complying with NFPA 80 that are listed and labeled by a testing and inspecting agency acceptable to authorities having jurisdiction, for fire and panic protection, based on testing according to UL 305 and NFPA 252. Mullions shall be used only with exit devices for which they have been tested.

H. Electromechanical exit devices utilized at fire rated openings shall be listed and labeled by a testing agency acceptable to authorities having jurisdiction, and shall maintain door(s) in positive latched position when power is off.

2.8 ELECTRIC STRIKES

A. Electric strikes shall meet ANSI/BHMA A156.31 Grade 1 requirements, and be listed and labeled under UL 1034 Burglary Resistant Electric Locking Equipment.

B. Electric strikes for fire rated openings shall be listed and labeled for such use by a testing agency acceptable to authorities having jurisdiction. Fail Secure (fail locked) strikes shall be used at all fire rated openings.

2.9 ELECTROMAGNETIC LOCK ASSEMBLIES

A. Electromagnetic lock assemblies shall meet ANSI/BHMA A156.23 Grade 1 requirements.

B. Locks shall be field-selectable for 12 or 24 VDC operation, and provide 1,500 lbf minimum holding force for direct pull applications and 2,000 lbf holding force for shear type applications.

C. Wiring connections shall be via on-board screw terminal connections. Lock shall have built-in circuit/ surge and voltage kickback suppression protection.

D. Where indicated, locks shall be equipped with concealed sensors to monitor magnetic bond status and door position status.

E. Locks used on fire rated doors shall be listed and labeled for such use by a testing agency acceptable to authorities having jurisdiction.

2.10 ELECTRICAL POWER TRANSFERS

A. Electrical power transfers shall be capable of transferring sufficient electrical current to properly operate electrified hardware in door.

B. Electrical power transfers used on fire rated doors shall be listed and labeled by a testing agency acceptable to authorities having jurisdiction.

2.11 FLUSH BOLTS

A. Automatic flush bolts shall meet ANSI/BHMA A156.3

B. Manual flush bolts shall meet BHMA A156.16 requirements.
1. Bottom bolt shall have 12 inch long operating rod. Top bolt operating rod shall be determined by door height, assuring the operator is located less than 72 inches above the floor.
2. Manual Flush Bolts are not to be utilized except where a pair of non-rated doors serving a room not normally occupied is needed for the movement of equipment.

C. Provide dust proof strikes for bottom bolts. Dust proof strikes shall meet BHMA A156.16.

2.12 DOOR COORDINATORS

A. Door coordinators shall meet ANSI/BHMA A156.3 requirements.

B. Door coordinators shall be flat bar type; stop mounted with all necessary filler bars and mounting brackets to accommodate required hardware.

C. Provide carry bar at each pair of doors equipped with an overlapping astragal, except when automatic or self-latching bolts are used.

2.13 SURFACE DOOR CLOSERS

A. Door closing devices shall meet ANSI/BHMA A156.4, Grade 1 requirements.

B. Surface closers shall be fully adjustable with sweep speed, latch speed and back check position valves.

C. Provide closers size adjusted in accordance with ANSI/BHMA A156.4; sized as required to insure closing and latching of doors.

D. Arm selection shall follow the requirements of the manufacturer's recommendations with brackets, drop plates and miscellaneous accessories provided as necessary.

E. Provide closers with arms designed to permit openings of doors as far as job conditions will permit; unless otherwise indicated closers with arms restricting opening of door will not be acceptable.

F. Electrified closers where indicated in hardware sets shall be tied into building fire alarm system to release upon fire-alarm activation or loss of power.

2.14 OVERHEAD CONCEALED DOOR CLOSERS

A. Overhead Concealed Door Closers shall meet ANSI/BHMA A156.4 requirements.

B. Closers shall be fully adjustable with sweep speed, latch speed and back check position valves.

C. Provide closers size adjusted in accordance with ANSI/BHMA A156.4; sized as required to insure closing and latching of doors.

2.15 FLOOR CLOSERS

A. Floor Closers shall meet ANSI/BHMA A156.4, Grade 1 requirements.

B. Closers shall be fully adjustable with sweep speed, latch speed and back check position valves.

C. Floor closers shall have cement boxes.

D. Pivots used on doors with floor closers shall be of the same manufacturer as the floor closers.

E. Provide flush floor cover plates for floor closers unless thresholds are indicated. Match door hardware finish, unless otherwise indicated.

F. Provide recessed floor plates to accommodate insert of floor finish material for floor closers, unless thresholds are indicated. Provide extended closer spindle to accommodate thickness of floor finish.

2.16 OVERHEAD HOLDERS AND STOPS

A. Overhead holders and stops shall meet ANSI/BHMA A156.8 requirements.

B. Overhead door holders and stops shall be adjustable from 90 to 110 degrees dead stop or hold open position, as applicable.

C. Overhead door stops shall have shock absorbers providing 5 to 7 degrees compression before dead stop.

D. Overhead stops shall not be provided with hold open function when used at fire rated doors.

2.17 ARCHITECTURAL DOOR TRIM

A. Architectural door trim shall meet ANSI/BHMA A156.6 requirements.

B. Door Protection Plates: Kick, mop, and armor plates shall be 0.050 inch thick brass, bronze, or stainless steel depending on finish indicated. Plates shall have beveled edges, and shall be provided with countersunk mounting holes and No. 6 oval head screw fasteners. Width of kick and armor plates shall be 2 inches less than door width for single doors and 1 inch less for pairs of doors. Width of mop plates shall be 1 inch less than door width. Unless otherwise indicated, height shall be 10 inches for kick and mop plates, and 34 inches for armor plates.
1. At fire rated doors, provide UL labeled protection plates in sizes, types, fasteners and materials only in accordance with door manufacturer’s listings for respective ratings.

C. Door Edging and Astragals: Fabricated from 18 gauge cold-rolled steel or 304 stainless steel as indicated; factory prepared for all mortise hardware; countersunk screw mounting.
1. At fire rated doors, provide UL labeled edge protection in sizes, types, fasteners and materials only in accordance with door manufacturer’s listings for respective ratings.

D. Push and pull plates shall be 0.050 inch thick brass, bronze, or stainless steel depending on finish indicated. Plates shall have beveled edges, and shall be furnished with countersunk mounting holes and No. 6 oval head screw fasteners. Pull plates shall also be furnished with flat-head through bolts for pull grip.

E. Push and pull bars and grip handles shall be brass, bronze, or stainless steel depending on BHMA finish indicated.

2.18 AUXILIARY HARDWARE

A. Auxiliary hardware shall meet ANSI/BHMA A156.16 requirements.

B. Door Stops: Stops shall be of heavy duty construction, provided in finish indicated. Wall bumpers shall have no visible fasteners. Floor stops shall be of height required by floor conditions.

C. Silencers: Gray rubber, non-marring configured for metal or wood frames as scheduled. Provide 3 per single door and 2 per pair of doors. Silencers shall be tamper resistant once installed in door frame.

2.19 DOOR BOTTOMS

A. Door bottoms shall be of aluminum or extruded bronze of the type and finish indicated and shall provide proper clearance and an effective seal with specified thresholds.

B. Door bottom shall have a vinyl, neoprene, silicone rubber, polyurethane or brush seal as indicated.

C. The door bottom shall exclude light when the door is in the closed position and shall inhibit the flow of air through the unit.

2.20 GASKETING

A. Gasketing shall meet ANSI/BHMA A156.22 requirements.

B. Shall be a compression type product for use with wood or steel doors; labeled for use on smoke-control and fire-rated doors where required.

2.21 FINISHES

A. Refer to drawings.

PART 3 - EXECUTION

3.1 EXAMINATION

A. Examine doors and frames for compliance with requirements for installation tolerances, labeled fire door assembly construction, wall and floor construction, and other conditions affecting performance.

B. Examine rough-in for electrical power systems to verify actual locations of wiring connections before electrified door hardware installation.

C. Proceed with installation only after unsatisfactory conditions have been corrected.

3.2 INSTALLATION

A. Steel doors shall be factory prepared for hardware per ANSI/BHMA A156.115.

B. Wood doors shall be factory prepared for hardware per ANSI/BHMA A156.115W.

C. Installation shall be in accordance with DHI A115.IG.

D. Hardware for fire door assemblies shall be installed conforming with NFPA 80, and all other applicable building codes and regulations.

E. Hardware for smoke door assemblies shall be installed conforming with NFPA 105, and all other applicable building codes and regulations.

F. Install each door hardware item according to manufacturer's printed instructions, utilizing templates and proper fasteners provided by manufacturer.

G. Set units level, plumb, and true to line and location. Adjust and reinforce attachment substrates as necessary for proper installation and operation.

H. Where cutting and fitting are required to install door hardware onto or into surfaces that are later to be painted or finished in another way, coordinate removal, storage, and reinstallation of surface protective trim units with finishing work specified in other Sections. Do not install surface-mounted items until finishes have been completed on substrates involved.

I. Install each door hardware item to comply with manufacturer's written instructions. Install overhead surface closers for maximum degree of opening obtainable. Place on room side of corridor doors, stair side of stair doors, secondary corridor side of doors between corridors. Where cutting and fitting are required to install door hardware onto or into surfaces that are later to be finished, coordinate removal, storage, and reinstallation of surface protective trim units with finishing work specified in Division 09 Sections. Do not install surface-mounted items until finishes have been completed on substrates involved.

J. All wall stops shall be installed with reinforced blocking in wallboard construction. Drywall anchors are not an acceptable means of reinforcement/blocking. Provide intermediate steel plates or channel reinforcement backing at wall stops mounted in wallboard construction.

K. Do not install permanent key cylinders in locks until the time of preliminary acceptance by the Owner. At the time of preliminary acceptance, and in the presence of the Owner's representative, permanent key all lock cylinders. Record and file all keys in the key control system specified, and turn system over to Owner for sole possession and control.

L. Key control storage system shall be installed where directed by the Owner.

M. Thresholds: Thresholds shall be secured with a minimum of 3 fasteners per single door width and 6 fasteners per double door width with a maximum spacing of 12 inches (305 mm). Minimum screw size shall be No. 10 length, dependent on job conditions, with a minimum of 3/4 inch (19 mm) thread engagement into the floor or anchoring device used. Screw heads to be countersunk and flush with face of threshold. Set thresholds for exterior and acoustical doors in full bed of sealant complying with requirements specified in Section 07 92 00 "Joint Sealants." Once installed thresholds shall not rock or cause noise when walked on.

3.3 DOOR CLOSING DEVICES

A. Surface closers on doors opening to or from halls and corridors shall be mounted on the room side of the door.

B. Surface closers on doors opening into stairs or stair vestibules shall be mounted on the stair or stair vestibule side of the door.

C. Surface closers on exterior doors shall be mounted on the interior side of building utilizing regular arm, or parallel arm mounting as required.

D. Door closing devices with adjustable spring power shall be adjusted for proper door operation, and compliance with all applicable codes and regulations.

E. Cutting of gasketing or weatherstripping to accommodate closer installation is not acceptable.

3.4 PUSH-PULL PLATES

A. Pull plate grip handles shall be through bolted through the door. When push plate is indicated on opposite door side, through bolts shall be countersunk with push plate mounted to conceal through bolts.

3.5 KEY CONTROL STORAGE SYSTEMS

A. Key control storage system shall be installed where directed by the Architect.

B. Place keys on markers and hooks in key control system cabinet, as determined by final keying schedule.

3.6 THRESHOLDS

A. Thresholds shall be secured with a minimum of 3 fasteners per single door width and 6 fasteners per double door width with a maximum spacing of 12 inches; with a minimum of 1 inch thread engagement into the floor or anchoring device used. Thresholds over 6 inches in width shall be secured with a double row of fasteners.

B. Exterior thresholds shall be installed in a bed of sealant with combination expansion anchors and stainless steel machine screws, except that bronze or anodized bronze thresholds shall be installed with expansion anchors with brass screws.

3.7 ASTRAGALS

A. Unless otherwise indicated install overlapping astragals as follows:
1. At out-swing pairs of doors, mount astragal on active leaf.
2. At in-swing pairs of doors, mount astragal on inactive leaf.

3.8 HARDWARE LOCATIONS

A. Unless otherwise indicated install hardware as follows:
1. Bottom Hinge: 10 inches from door bottom to bottom of hinge.
2. Top Hinge: 5 inches from door top to top of hinge.
3. Center Hinge(s) or Pivot(s): Spaced equidistantly between top and bottom hinges/ pivots.
4. Lockset / Latchset: 38 inches from finished floor to center of lever.
5. Exit Device: 38 inches from finished floor to device centerline.
6. Deadlock: 32 inches from finished floor to center key cylinder / thumb turn.
7. Push Plate/ Pull Plate: 42 inches from finished floor to center of pull.
8. Wall Bumper: Centered at point on wall where lever, or other operating trim, first makes contact with wall.

9. Floor Stop: Adjacent to wall; not to exceed 4 inches from face of wall; located 3 inches from latch edge of door; in any case never more than 50 percent of door width from latch edge of door.

3.9 ADJUSTING

A. Adjust and check each operating item of door hardware and each door to ensure proper operation or function of every unit. Replace units that cannot be adjusted to operate as intended.

B. Engage a factory-authorized service representative to adjust door closing devices, compensating for final operation of heating and ventilating equipment, and to comply with referenced accessibility requirements.

3.10 COMPLETION

A. When complete all hardware shall be properly secured in place and all exposed surfaces shall be clean and free from scratches, paint, and other defects and damages.

3.11 DOOR HARDWARE SETS

A. Refer to drawings.

END OF SECTION 08 7100

SECTION 08 8000 - GLAZING

PART 1 - GENERAL

1.1 SUMMARY

A. Section Includes:

1. Glass products.
2. Insulating glass.
3. Glazing sealants.
4. Glazing tapes.
5. Miscellaneous glazing materials.

1.2 DEFINITIONS

A. Glass Manufacturers: Firms that produce primary glass, fabricated glass, or both, as defined in referenced glazing publications.

B. Glass Thicknesses: Indicated by thickness designations in millimeters in accordance with ASTM C1036.

C. IBC: International Building Code.

D. Interspace: Space between lites of an insulating-glass unit.

1.3 COORDINATION

A. Coordinate glazing channel dimensions to provide necessary bite on glass, minimum edge and face clearances, and adequate sealant thicknesses, with reasonable tolerances to achieve proper safety margins for glazing retention under each design load case, load case combination, and service condition.

1.4 ACTION SUBMITTALS

A. Product Data: For each type of product.

B. Glass Samples: For each type of the following products; 12 inches square.

1. Coated glass.
2. Laminated glass.
3. Insulating glass.
4. Spandrel glass.

C. Glazing Schedule: List glass types and thicknesses for each size opening and location. Use same designations indicated on Drawings.

1.5 INFORMATIONAL SUBMITTALS

A. Qualification Data: For manufacturers of fabricated glass units.

B. Product Certificates: For glass.

C. Product Test Reports: For fabricated glass and glazing sealants, for tests performed by a qualified testing agency.

1. For glazing sealants, provide test reports based on testing current sealant formulations within previous 36-month period.

D. Sample Warranties: For special warranties.

1.6 QUALITY ASSURANCE

A. Fabricated-Glass Manufacturer Qualifications: A qualified manufacturer of fabricated glass units who is approved and certified by primary glass manufacturer.

1.7 DELIVERY, STORAGE, AND HANDLING

A. Protect glazing materials in accordance with manufacturer's written instructions. Prevent damage to glass and glazing materials from condensation, temperature changes, direct exposure to sun, or other causes.

B. Comply with insulating-glass manufacturer's written instructions for venting and sealing units to avoid hermetic seal ruptures due to altitude change.

1.8 FIELD CONDITIONS

A. Environmental Limitations: Do not proceed with glazing when ambient and substrate temperature conditions are outside limits permitted by glazing material manufacturers and when glazing channel substrates are wet from rain, frost, condensation, or other causes.

1. Do not install glazing sealants when ambient and substrate temperature conditions are outside limits permitted by sealant manufacturer or are below 40 deg F.

1.9 WARRANTY

A. Manufacturer's Special Warranty for Coated-Glass Products: Manufacturer agrees to replace coated-glass units that deteriorate within specified warranty period. Deterioration of coated glass is defined as defects developed from normal use that are not attributed to glass breakage or to

maintaining and cleaning coated glass contrary to manufacturer's written instructions. Defects include peeling, cracking, and other indications of deterioration in coating.

1. Warranty Period: 10 years from date of Substantial Completion.

B. Manufacturer's Special Warranty for Insulating Glass: Manufacturer agrees to replace insulating-glass units that deteriorate within specified warranty period. Deterioration of insulating glass is defined as failure of hermetic seal under normal use that is not attributed to glass breakage or to maintaining and cleaning insulating glass contrary to manufacturer's written instructions. Evidence of failure is obstruction of vision by dust, moisture, or film on interior surfaces of glass.

1. Warranty Period: 10 years from date of Substantial Completion.

PART 2 - PRODUCTS

2.1 MANUFACTURERS

A. Source Limitations for Glazing Accessories: For each product and installation method, obtain from single source from single manufacturer.

2.2 PERFORMANCE REQUIREMENTS

A. General: Installed glazing systems shall withstand normal thermal movement and wind and impact loads (where applicable) without failure, including loss or glass breakage attributable to defective manufacture, fabrication, or installation; failure of sealants or gaskets to remain watertight and airtight; deterioration of glazing materials; or other defects in construction.

2.3 GLASS PRODUCTS, GENERAL

A. Glazing Publications: Comply with published recommendations of glass product manufacturers and organizations below unless more stringent requirements are indicated. See these publications for glazing terms not otherwise defined in this Section or in referenced standards.

1. NGA Publications: "Glazing Manual."
2. AAMA Publications: AAMA GDSG-1, "Glass Design for Sloped Glazing," and AAMA TIR A7, "Sloped Glazing Guidelines."
3. IGMA Publication for Sloped Glazing: IGMA TB-3001, "Guidelines for Sloped Glazing."
4. IGMA Publication for Insulating Glass: SIGMA TM-3000, "North American Glazing Guidelines for Sealed Insulating Glass Units for Commercial and Residential Use."

B. Safety Glazing Labeling: Where safety glazing is indicated, permanently mark glazing with certification label of the SGCC or another certification agency acceptable to authorities having jurisdiction . Label shall indicate manufacturer's name, type of glass, thickness, and safety glazing standard with which glass complies.

C. Thickness: Where glass thickness is indicated, it is a minimum. Provide glass that complies with performance requirements and is not less than thickness indicated.

1. Minimum Glass Thickness for Exterior Lites: As indicated on drawings .

D. Strength: Where annealed float glass is indicated, provide annealed float glass, heat-strengthened float glass, or fully tempered float glass as needed to comply with "Performance Requirements" Article. Where heat-strengthened float glass is indicated, provide heat-strengthened float glass or fully tempered float glass as needed to comply with "Performance Requirements" Article. Where fully tempered float glass is indicated, provide fully tempered float glass.

2.4 GLASS PRODUCTS

A. Frosted glass to match existing.

2.5 GLAZING SEALANTS

A. General:

1. Compatibility: Compatible with one another and with other materials they contact, including glass products, seals of insulating-glass units, and glazing channel substrates, under conditions of service and application, as demonstrated by sealant manufacturer based on testing and field experience.
2. Suitability: Comply with sealant and glass manufacturers' written instructions for selecting glazing sealants suitable for applications indicated and for conditions existing at time of installation.
3. Colors of Exposed Glazing Sealants: As selected by Architect from manufacturer's full range of industry colors.

B. Neutral-Curing Silicone Glazing Sealant, Class 25: Complying with ASTM C920, Type S, Grade NS, Use NT.

1. Manufacturers: Subject to compliance with requirements, provide products by one of the following:
   a. Bostik, Inc.
   b. GE Construction Sealants; Momentive Performance Materials Inc.
   c. Pecora Corporation.
   d. Sika Corporation.
   e. The Dow Chemical Company.

2.6 GLAZING TAPES

A. Back-Bedding Mastic Glazing Tapes: Preformed, butyl-based, 100 percent solids elastomeric tape; nonstaining and nonmigrating in contact with nonporous surfaces; with or without spacer rod as recommended in writing by tape and glass manufacturers for application indicated; and complying with ASTM C1281 and AAMA 800 for products indicated below:

1. AAMA 804.3 tape, where indicated.
2. AAMA 806.3 tape, for glazing applications in which tape is subject to continuous pressure.
3. AAMA 807.3 tape, for glazing applications in which tape is not subject to continuous pressure.

2.7 MISCELLANEOUS GLAZING MATERIALS

A. General: Provide products of material, size, and shape complying with referenced glazing standard, recommended in writing by manufacturers of glass and other glazing materials for application indicated, and with a proven record of compatibility with surfaces contacted in installation.

B. Cleaners, Primers, and Sealers: Types recommended by sealant or gasket manufacturer.

C. Setting Blocks:

1. Silicone with Shore A durometer hardness of 85, plus or minus 5.
2. Type recommended in writing by sealant or glass manufacturer.

D. Spacers:

1. Neoprene blocks or continuous extrusions of hardness required by glass manufacturer to maintain glass lites in place for installation indicated.
2. Type recommended in writing by sealant or glass manufacturer.

E. Cylindrical Glazing Sealant Backing: ASTM C1330, Type O (open-cell material), of size and density to control glazing sealant depth and otherwise produce optimum glazing sealant performance.

2.8 FABRICATION OF GLAZING UNITS

A. Fabricate glazing units in sizes required to fit openings indicated for Project, with edge and face clearances, edge and surface conditions, and bite complying with written instructions of product manufacturer and referenced glazing publications, to comply with system performance requirements.

1. Allow for thermal movements from ambient and surface temperature changes acting on glass framing members and glazing components.
   a. Temperature Change: 120 deg F , ambient; 180 deg F , material surfaces .

B. Clean-cut or flat-grind vertical edges of butt-glazed monolithic lites to produce square edges with slight chamfers at junctions of edges and faces.

C. Grind smooth and polish exposed glass edges and corners.

PART 3 - EXECUTION

3.1 EXAMINATION

A. Examine framing, glazing channels, and stops, with Installer present, for compliance with the following:

1. Manufacturing and installation tolerances, including those for size, squareness, and offsets at corners.
2. Presence and functioning of weep systems.
3. Minimum required face and edge clearances.
4. Effective sealing between joints of glass-framing members.

B. Proceed with installation only after unsatisfactory conditions have been corrected.

3.2 PREPARATION

A. Clean glazing channels and other framing members receiving glass immediately before glazing. Remove coatings not firmly bonded to substrates.

B. Examine glazing units to locate exterior and interior surfaces. Label or mark units as needed so that exterior and interior surfaces are readily identifiable. Do not use materials that leave visible marks in the completed Work.

3.3 GLAZING, GENERAL

A. Comply with combined written instructions of manufacturers of glass, sealants, gaskets, and other glazing materials, unless more stringent requirements are indicated, including those in referenced glazing publications.

B. Protect glass edges from damage during handling and installation. Remove damaged glass from Project site and legally dispose of off Project site. Damaged glass includes glass with edge damage or other imperfections that, when installed, could weaken glass, impair performance, or impair appearance.

C. Apply primers to joint surfaces where required for adhesion of sealants, as determined by preconstruction testing.

D. Install setting blocks in sill rabbets, sized and located to comply with referenced glazing publications, unless otherwise required by glass manufacturer. Set blocks in thin course of compatible sealant suitable for heel bead.

E. Do not exceed edge pressures stipulated by glass manufacturers for installing glass lites.

F. Provide spacers for glass lites where length plus width is larger than 50 inches.

1. Locate spacers directly opposite each other on both inside and outside faces of glass. Install correct size and spacing to preserve required face clearances, unless gaskets and glazing tapes are used that have demonstrated ability to maintain required face clearances and to comply with system performance requirements.
2. Provide 1/8-inch- minimum bite of spacers on glass and use thickness equal to sealant width. With glazing tape, use thickness slightly less than final compressed thickness of tape.

G. Provide edge blocking where indicated or needed to prevent glass lites from moving sideways in glazing channel, as recommended in writing by glass manufacturer and in accordance with requirements in referenced glazing publications.

H. Set glass lites in each series with uniform pattern, draw, bow, and similar characteristics.

I. Set glass lites with proper orientation so that coatings face exterior or interior as specified.

J. Where wedge-shaped gaskets are driven into one side of channel to pressurize sealant or gasket on opposite side, provide adequate anchorage so gasket cannot walk out when installation is subjected to movement.

K. Square cut wedge-shaped gaskets at corners and install gaskets in a manner recommended by gasket manufacturer to prevent corners from pulling away; seal corner joints and butt joints with sealant recommended in writing by gasket manufacturer.

3.4 TAPE GLAZING

A. Position tapes on fixed stops so that, when compressed by glass, their exposed edges are flush with or protrude slightly above sightline of stops.

B. Install tapes continuously, but not necessarily in one continuous length. Do not stretch tapes to make them fit opening.

C. Cover vertical framing joints by applying tapes to heads and sills first, then to jambs. Cover horizontal framing joints by applying tapes to jambs, then to heads and sills.

D. Place joints in tapes at corners of opening with adjoining lengths butted together, not lapped. Seal joints in tapes with compatible sealant approved by tape manufacturer.

E. Do not remove release paper from tape until right before each glazing unit is installed.

F. Apply heel bead of elastomeric sealant.

G. Center glass lites in openings on setting blocks, and press firmly against tape by inserting dense compression gaskets formed and installed to lock in place against faces of removable stops. Start gasket applications at corners and work toward centers of openings.

H. Apply cap bead of elastomeric sealant over exposed edge of tape.

3.5 SEALANT GLAZING (WET)

A. Install continuous spacers, or spacers combined with cylindrical sealant backing, between glass lites and glazing stops to maintain glass face clearances and to prevent sealant from extruding into glass channel and blocking weep systems until sealants cure. Secure spacers or spacers and backings in place and in position to control depth of installed sealant relative to edge clearance for optimum sealant performance.

B. Force sealants into glazing channels to eliminate voids and to ensure complete wetting or bond of sealant to glass and channel surfaces.

C. Tool exposed surfaces of sealants to provide a substantial wash away from glass.

3.6 CLEANING AND PROTECTION

A. Immediately after installation, remove nonpermanent labels and clean surfaces.

B. Protect glass from contact with contaminating substances resulting from construction operations. Examine glass surfaces adjacent to or below exterior concrete and other masonry surfaces at frequent intervals during construction, but not less than once a month, for buildup of dirt, scum, alkaline deposits, or stains.

1. If, despite such protection, contaminating substances do contact with glass, remove substances immediately as recommended in writing by glass manufacturer. Remove and replace glass that cannot be cleaned without damage to coatings.

C. Remove and replace glass that is damaged during construction period.

D. Wash glass on both exposed surfaces not more than four days before date scheduled for inspections that establish date of Substantial Completion. Wash glass as recommended in writing by glass manufacturer.

3.7 GLAZING SCHEDULE

A. Refer to Drawings.

END OF SECTION 08 8000

SECTION 09 2216 - NON-STRUCTURAL METAL FRAMING

PART 1 - GENERAL

1.1 SUMMARY

A. Section Includes:

1. Non-load-bearing steel framing systems for interior partitions.
2. Suspension systems for interior ceilings and soffits.
3. Grid suspension systems for gypsum board ceilings.

B. Related Requirements:

1. Section 05 4000 "Cold-Formed Metal Framing" for exterior and interior load-bearing and exterior non-load-bearing wall studs; floor joists; and roof rafters and ceiling joists.

1.2 DELIVERY, STORAGE, AND HANDLING

A. Notify manufacturer of damaged materials received prior to installation.

B. Deliver materials in manufacturer's original, unopened, undamaged containers with identification labels intact.

C. Protect cold-formed metal framing from corrosion, deformation, and other damage during delivery, storage, and handling as required by AISI S202, "Code of Standard Practice for Cold-Formed Steel Structural Framing."

PART 2 - PRODUCTS

2.1 PERFORMANCE REQUIREMENTS

A. Fire-Test-Response Characteristics: For fire-resistance-rated assemblies that incorporate non-load-bearing steel framing, provide materials and construction identical to those tested in assembly indicated, according to ASTM E119 by an independent testing agency.

B. STC-Rated Assemblies: For STC-rated assemblies, provide materials and construction identical to those tested in assembly indicated on Drawings, according to ASTM E90 and classified according to ASTM E413 by an independent testing agency.

C. Horizontal Deflection: For non-composite wall assemblies, limited to 1/360 of the wall height based on horizontal loading of 5 lbf/sq. ft. .

D. Design framing systems in accordance with AISI S220, "North American Specification for the Design of Cold-Formed Steel Framing - Nonstructural Members," unless otherwise indicated.

E. Design Loads: As indicated on architectural Drawings or 5 lbf/sq. ft. minimum as required by the IBC.

2.2 FRAMING SYSTEMS

A. Framing Members, General: Comply with ASTM C645 for conditions indicated.

1. Steel Sheet Components: Comply with ASTM C645 requirements for metal unless otherwise indicated
2. Protective Coating: Comply with ASTM C645 ; ASTM A653/A653M, G40; or coating with equivalent corrosion resistance. Galvannealed products are unacceptable.
    a. Coating demonstrates equivalent corrosion resistance with an evaluation report acceptable to authorities having jurisdiction.

B. Studs and Track: ASTM C645 .

1. Manufacturers: Subject to compliance with requirements, provide products by one of the following:
    a. ClarkDietrich.
    b. Marino\WARE.
    c. MRI Steel Framing, LLC.
    d. SCAFCO Steel Stud Company.
2. Minimum Base-Steel Thickness: As required by performance requirements for horizontal deflection .
3. Depth: As indicated on Drawings .

C. Embossed, High Strength Steel Studs and Tracks: Roll-formed and embossed with surface deformations to stiffen the framing members so that they are structurally comparable to conventional ASTM C645 steel studs and tracks.

1. Manufacturers: Subject to compliance with requirements, provide products by one of the following:
    a. ClarkDietrich.
    b. Marino\WARE.
    c. SCAFCO Steel Stud Company.
    d. Minimum Base-Steel Thickness: As required by horizontal deflection performance requirements .
    e. Depth: As indicated on Drawings .

D. Slip-Type Head Joints: Where indicated, provide the following:

1. Deflection Track: Steel sheet top track manufactured to prevent cracking of finishes applied to interior partition framing resulting from deflection of structure above; in thickness not less than indicated for studs and in width to accommodate depth of studs.
    a. Manufacturers: Subject to compliance with requirements, provide products by one of the following:
        1) ClarkDietrich.
        2) Marino\WARE.
        3) SCAFCO Steel Stud Company.

E. Firestop Tracks: Top track manufactured to allow partition heads to expand and contract with movement of structure while maintaining continuity of fire-resistance-rated assembly indicated; in thickness not less than indicated for studs and in width to accommodate depth of studs.

1. Manufacturers: Subject to compliance with requirements, provide products by one of the following:
   a. ClarkDietrich.
   b. Marino\WARE.
   c. SCAFCO Steel Stud Company.

F. Flat Strap and Backing Plate: Steel sheet for blocking and bracing in length and width indicated.

1. Manufacturers: Subject to compliance with requirements, provide products by one of the following:
   a. ClarkDietrich.
   b. Marino\WARE.
   c. SCAFCO Steel Stud Company.
2. Minimum Base-Steel Thickness: 0.0329 inch .

G. Cold-Rolled Channel Bridging: Steel, 0.0538-inch minimum base-steel thickness, with minimum 1/2-inch- wide flanges.

1. Manufacturers: Subject to compliance with requirements, provide products by one of the following:
   a. ClarkDietrich.
   b. Marino\WARE.
   c. SCAFCO Steel Stud Company.
2. Depth: 1-1/2 inches .
3. Clip Angle: Not less than 1-1/2 by 1-1/2 inches, 0.068-inch- thick, galvanized steel.

H. Hat-Shaped, Rigid Furring Channels: ASTM C645.

1. Manufacturers: Subject to compliance with requirements, provide products by one of the following:
   a. ClarkDietrich.
   b. Marino\WARE.
   c. SCAFCO Steel Stud Company.
2. Minimum Base-Steel Thickness: 0.0179 inch .
3. Depth: As indicated on Drawings .

I. Resilient Furring Channels: 1/2-inch- deep, steel sheet members designed to reduce sound transmission.

1. Manufacturers: Subject to compliance with requirements, provide products by one of the following:
   a. ClarkDietrich.
   b. Marino\WARE.
   c. SCAFCO Steel Stud Company.
2. Configuration: Asymmetrical or hat shaped.

J. Z-Shaped Furring: With slotted or nonslotted web, face flange of 1-1/4 inches, wall attachment flange of 7/8 inch, minimum uncoated-steel thickness of 0.0179 inch, and depth required to fit insulation thickness indicated.

1. Manufacturers: Subject to compliance with requirements, provide products by one of the following:
   a. ClarkDietrich.
   b. Marino\WARE.
   c. SCAFCO Steel Stud Company.

2.3 SUSPENSION SYSTEMS

A. Tie Wire: ASTM A641/A641M, Class 1 zinc coating, soft temper, 0.062-inch- diameter wire, or double strand of 0.048-inch- diameter wire.

B. Wire Hangers: ASTM A641/A641M, Class 1 zinc coating, soft temper, 0.16 inch in diameter.

C. Flat Hangers: Steel sheet, 1 by 3/16 inch by length indicated .

D. Carrying Channels (Main Runners): Cold-rolled, commercial-steel sheet with a base-steel thickness of 0.0538 inch and minimum 1/2-inch- wide flanges.

1. Depth: As indicated on Drawings .

E. Furring Channels (Furring Members):

1. Hat-Shaped, Rigid Furring Channels: ASTM C645, 7/8 inch deep.
   a. Minimum Base-Steel Thickness: 0.0329 inch .
2. Resilient Furring Channels: 1/2-inch- deep members designed to reduce sound transmission.
   a. Configuration: Asymmetrical or hat shaped.

F. Grid Suspension System for Gypsum Board Ceilings: ASTM C645, direct-hung system composed of main beams and cross-furring members that interlock.

1. Manufacturers: Subject to compliance with requirements, provide products by one of the following:
   a. Armstrong Ceiling & Wall Solutions.
   b. Certainteed; SAINT-GOBAIN.
   c. USG Corporation.

2.4 AUXILIARY MATERIALS

A. General: Provide auxiliary materials that comply with referenced installation standards.

1. Fasteners for Steel Framing: Of type, material, size, corrosion resistance, holding power, and other properties required to fasten steel members to substrates.

PART 3 - EXECUTION

3.1 EXAMINATION

A. Examine areas and substrates, with Installer present, and including welded hollow-metal frames, cast-in anchors, and structural framing, for compliance with requirements and other conditions affecting performance of the Work.

B. Proceed with installation only after unsatisfactory conditions have been corrected.

3.2 PREPARATION

A. Suspended Assemblies: Coordinate installation of suspension systems with installation of overhead structure to ensure that inserts and other provisions for anchorages to building structure have been installed to receive hangers at spacing required to support the Work and that hangers will develop their full strength.

1. Furnish concrete inserts and other devices indicated to other trades for installation in advance of time needed for coordination and construction.

3.3 INSTALLATION, GENERAL

A. Installation Standard: ASTM C754.

1. Gypsum Board Assemblies: Also comply with requirements in ASTM C840 that apply to framing installation.

B. Install framing and accessories plumb, square, and true to line, with connections securely fastened.

C. Install supplementary framing, and blocking to support fixtures, equipment services, heavy trim, grab bars, toilet accessories, furnishings, or similar construction.

D. Install bracing at terminations in assemblies.

E. Do not bridge building control and expansion joints with non-load-bearing steel framing members. Frame both sides of joints independently.

3.4 INSTALLING FRAMED ASSEMBLIES

A. Install framing system components according to spacings indicated, but not greater than spacings required by referenced installation standards for assembly types.

1. Single-Layer Application: As required by horizontal deflection performance requirements unless otherwise indicated.
2. Multilayer Application: As required by horizontal deflection performance requirements unless otherwise indicated.

3. Tile Backing Panels: As required by horizontal deflection performance requirements unless otherwise indicated.

B. Where studs are installed directly against exterior masonry walls or dissimilar metals at exterior walls, install isolation strip between studs and exterior wall.

C. Install studs so flanges within framing system point in same direction.

D. Install tracks at floors and overhead supports. Extend framing full height to structural supports or substrates above suspended ceilings except where partitions are indicated to terminate at suspended ceilings. Continue framing around ducts that penetrate partitions above ceiling.

1. Slip-Type Head Joints: Where framing extends to overhead structural supports, install to produce joints at tops of framing systems that prevent axial loading of finished assemblies.
2. Door Openings: Screw vertical studs at jambs to jamb anchor clips on door frames; install track section (for cripple studs) at head and secure to jamb studs.
    a. Install two studs at each jamb unless otherwise indicated.
    b. Extend jamb studs through suspended ceilings and attach to underside of overhead structure.
3. Fire-Resistance-Rated Partitions: Install framing to comply with fire-resistance-rated assembly indicated and support closures and to make partitions continuous from floor to underside of solid structure.
    a. Firestop Track: Where indicated, install to maintain continuity of fire-resistance-rated assembly indicated.
4. Sound-Rated Partitions: Install framing to comply with sound-rated assembly indicated.

E. Direct Furring:

1. Screw to wood framing.
2. Attach to concrete or masonry with stub nails, screws designed for masonry attachment, or powder-driven fasteners spaced 24 inches o.c.

F. Z-Shaped Furring Members:

1. Erect insulation, specified in Section 07 2100 "Thermal Insulation," vertically and hold in place with Z-shaped furring members spaced 24 inches o.c.
2. Except at exterior corners, securely attach narrow flanges of furring members to wall with concrete stub nails, screws designed for masonry attachment, or powder-driven fasteners spaced 24 inches o.c.
3. At exterior corners, attach wide flange of furring members to wall with short flange extending beyond corner; on adjacent wall surface, screw-attach short flange of furring channel to web of attached channel. At interior corners, space second member no more than 12 inches from corner and cut insulation to fit.

3.5 INSTALLING CEILING SUSPENSION SYSTEMS

A. Install suspension system components according to spacings indicated, but not greater than spacings required by referenced installation standards for assembly types.

1. Hangers: 48 inches o.c.

B. Isolate suspension systems from building structure where they abut or are penetrated by building structure to prevent transfer of loading imposed by structural movement.

C. Suspend hangers from building structure as follows:

1. Install hangers plumb and free from contact with insulation or other objects within ceiling plenum that are not part of supporting structural or suspension system.
   a. Splay hangers only where required to miss obstructions and offset resulting horizontal forces by bracing, countersplaying, or other equally effective means.
2. Where width of ducts and other construction within ceiling plenum produces hanger spacings that interfere with locations of hangers required to support standard suspension system members, install supplemental suspension members and hangers in the form of trapezes or equivalent devices.
   a. Size supplemental suspension members and hangers to support ceiling loads within performance limits established by referenced installation standards .
3. Wire Hangers: Secure by looping and wire tying, either directly to structures or to inserts, eye screws, or other devices and fasteners that are secure and appropriate for substrate, and in a manner that will not cause hangers to deteriorate or otherwise fail.
4. Flat Hangers: Secure to structure, including intermediate framing members, by attaching to inserts, eye screws, or other devices and fasteners that are secure and appropriate for structure and hanger, and in a manner that will not cause hangers to deteriorate or otherwise fail.
5. Do not attach hangers to steel roof deck.
6. Do not attach hangers to permanent metal forms. Furnish cast-in-place hanger inserts that extend through forms.
7. Do not attach hangers to rolled-in hanger tabs of composite steel floor deck.
8. Do not connect or suspend steel framing from ducts, pipes, or conduit.

D. Fire-Resistance-Rated Assemblies: Wire tie furring channels to supports.

E. Grid Suspension Systems: Attach perimeter wall track or angle where grid suspension systems meet vertical surfaces. Mechanically join main beam and cross-furring members to each other and butt-cut to fit into wall track.

F. Installation Tolerances: Install suspension systems that are level to within 1/8 inch in 12 feet measured lengthwise on each member that will receive finishes and transversely between parallel members that will receive finishes.

END OF SECTION 09 2216

SECTION 09 6513 - RESILIENT BASE AND ACCESSORIES

PART 1 - GENERAL

1.1 RELATED DOCUMENTS

A. Drawings and general provisions of the Contract, including General and Supplementary Conditions and Division 01 Specification Sections, apply to this Section.

1.2 SUMMARY

A. Section Includes:

1. Resilient base.
2. Resilient molding accessories.

1.3 ACTION SUBMITTALS

A. Product Data: For each type of product.

B. Samples: For each exposed product and for each color and texture specified, not less than 12 inches long.

C. Product Schedule: For resilient base and accessory products. Use same designations indicated on Drawings.

1.4 MAINTENANCE MATERIAL SUBMITTALS

A. Furnish extra materials that match products installed and that are packaged with protective covering for storage and identified with labels describing contents.

1. Furnish not less than 10 linear feet for every 500 linear feet or fraction thereof, of each type, color, pattern, and size of resilient product installed.

1.5 QUALITY ASSURANCE

A. Mockups: Install base and tile in area directed by Architect for review to (1) verify selections made under Sample submittals; (2) to demonstrate aesthetic effects; and (3) set quality standards for materials and execution.

1. Include inside corner, outside corner,and lap joint.
2. Coordinate mockups in this Section with mockups specified in other Sections.

1.6 DELIVERY, STORAGE, AND HANDLING

A. Store resilient products and installation materials in dry spaces protected from the weather, with ambient temperatures maintained within range recommended by manufacturer, but not less than 50 deg F or more than 90 deg F.

1.7 FIELD CONDITIONS

A. Maintain ambient temperatures within range recommended by manufacturer, but not less than 70 deg F or more than 95 deg F, in spaces to receive resilient products during the following time periods:

1. 48 hours before installation.
2. During installation.
3. 48 hours after installation.

B. After installation and until Substantial Completion, maintain ambient temperatures within range recommended by manufacturer, but not less than 55 deg F or more than 95 deg F.

C. Install resilient products after other finishing operations, including painting, have been completed.

PART 2 - PRODUCTS

2.1 THERMOPLASTIC-RUBBER BASE

A. Manufacturers: Subject to compliance with requirements, provide products listed in the Material Schedule on the Drawings as manufactured by Johnsonite or equal.

B. Requests for substitutions will be considered in accordance with provisions 01 60 00 – Product Requirements.

C. Product Standard: ASTM F 1861, Type TP (rubber, thermoplastic).

D. RX-1:
1. Wall Base: TSB 476X100 1/8 Toe
2. Size: As indicated on the drawings
3. Color: As indicated on the drawings.

E. RX-2:
1. Chair rail Panel Cap: SH-469-A
2. Size: As indicated on the drawings
3. Color: As indicated on drawings.

F. Lengths: Cut lengths 48 inches long or coils in manufacturer's standard length.

G. Outside Corners: Job formed or preformed.

H. Inside Corners: Job formed or preformed.

2.2 INSTALLATION MATERIALS

A. Adhesives: Water-resistant type recommended by resilient-product manufacturer for resilient products and substrate conditions indicated.

PART 3 - EXECUTION

3.1 EXAMINATION

A. Examine substrates, with Installer present, for compliance with requirements for maximum moisture content and other conditions affecting performance of the Work.

1. Verify that finishes of substrates comply with tolerances and other requirements specified in other Sections and that substrates are free of cracks, ridges, depressions, scale, and foreign deposits that might interfere with adhesion of resilient products.

B. Proceed with installation only after unsatisfactory conditions have been corrected.

1. Installation of resilient products indicates acceptance of surfaces and conditions.

3.2 PREPARATION

A. Prepare substrates according to manufacturer's written instructions to ensure adhesion of resilient products.

B. Fill cracks, holes, and depressions in substrates with trowelable leveling and patching compound; remove bumps and ridges to produce a uniform and smooth substrate.

C. Do not install resilient products until they are the same temperature as the space where they are to be installed.

1. At least 48 hours in advance of installation, move resilient products and installation materials into spaces where they will be installed.

D. Immediately before installation, sweep and vacuum clean substrates to be covered by resilient products.

3.3 RESILIENT BASE INSTALLATION

A. Comply with manufacturer's written instructions for installing resilient base.

B. Install resilient base in lengths as long as practical without gaps at seams and with tops of adjacent pieces aligned.

C. Tightly adhere resilient base to substrate throughout length of each piece, with base in continuous contact with horizontal and vertical substrates.

D. Do not stretch resilient base during installation.

E. Preformed Corners: Install preformed corners before installing straight pieces.

F. Job-Formed Corners:

1. Outside Corners: Use straight pieces of maximum lengths possible and form with returns not less than 3 inches in length.

    a. Form without producing discoloration (whitening) at bends.
    b. Do not miter or cope outside corners.

2. Inside Corners: Use straight pieces of maximum lengths possible and form with returns not less than 3 inches in length.

    a. Miter or cope corners to minimize open joints.

3.4 RESILIENT ACCESSORY INSTALLATION

A. Comply with manufacturer's written instructions for installing resilient accessories.

B. Resilient Molding Accessories: Butt to adjacent materials and tightly adhere to substrates throughout length of each piece. Install reducer strips at edges of floor covering that would otherwise be exposed.

3.5 CLEANING AND PROTECTION

A. Comply with manufacturer's written instructions for cleaning and protecting resilient products.

B. Perform the following operations immediately after completing resilient-product installation:

1. Remove adhesive and other blemishes from exposed surfaces.
2. Sweep and vacuum horizontal surfaces thoroughly.
3. Damp-mop horizontal surfaces to remove marks and soil.

C. Protect resilient products from mars, marks, indentations, and other damage from construction operations and placement of equipment and fixtures during remainder of construction period.

D. Cover resilient products subject to wear and foot traffic until Substantial Completion.

END OF SECTION 09 6513

SECTION 09 6516 - RESINOUS FLOORING

PART 1 – GENERAL

1.1 RELATED DOCUMENTS

A. Drawings and general provisions of the Contract, including General and Supplementary Conditions and Division 1 Specification Sections, apply to this Section.

1.2 SUMMARY

A. This section includes the following:

1. Resinous flooring system as shown on the drawings and in schedules.

1.4 SUBMITTALS

A. Product Data: Latest edition of Manufacturer's literature including performance data and installation procedures.
B. Manufacturer’s Safety Data Sheet (MSDS) for each product being used.
C. Samples: A 3 x 3 inch square sample of the proposed system. Color, texture, and thickness shall be representative of overall appearance of finished system subject to normal tolerances.

1.5 QUALITY ASSURANCE

A. The Manufacturer shall have a minimum of 10 years experience in the production, sales, and technical support of epoxy and urethane industrial flooring and related materials.
B. The Applicator shall have experience in installation of the flooring system as confirmed by the manufacturer in all phases of surface preparation and application of the product specified.

D. System shall be in compliance with requirements of United States Department of Agriculture (USDA), Food, Drug Administration (FDA), and local Health Department.
F. A pre-installation conference shall be held between Applicator, General Contractor and the Owner for review and clarification of this specification, application procedure, quality control, inspection and acceptance criteria and production schedule.

1.6 PRODUCT DELIVERY, STORAGE, AND HANDLING

A. Packing and Shipping
1. All components of the system shall be delivered to the site in the Manufacturer's packaging, clearly identified with the product type and batch number.

B. Storage and Protection

1. The Applicator shall be provided with a dry storage area for all components. The area shall be between 60 F and 85 F, dry, out of direct sunlight and in accordance with the Manufacturer's recommendations and relevant health and safety regulations.
2. Copies of Safety Data Sheets (SDS) for all components shall be kept on site for review by the Engineer or other personnel.

C. Waste Disposal

1. The Applicator shall be provided with adequate disposal facilities for non-hazardous waste generated during installation of the system.

1.7 PROJECT CONDITIONS

A. Site Requirements

1. Application may proceed while air, material and substrate temperatures are between 60 F and 85 F providing the substrate temperature is above the dew point. Outside of this range, the Manufacturer shall be consulted.
2. The relative humidity in the specific location of the application shall be less than 85 % and the surface temperature shall be at least 5 F above the dew point.
3. The Applicator shall be supplied with adequate lighting equal to the final lighting level during the preparation and installation of the system.
4. Close spaces to traffic during resinous flooring application and for not less than 24 hours after application unless manufacturer recommends a longer period.

B. Conditions of new concrete to be coated with cementitious urethane material.

1. Concrete shall be moisture cured for a minimum of 7 days and have fully cured for 14 days in accordance
with ACI-308 prior to the application of the coating system pending moisture tests. Outside of these
parameters manufacturer shall be consulted.
2. Concrete shall have a flat rubbed finish, float or light steel trowel finish (a hard steel trowel finish is neither necessary nor desirable).
3. Sealers and curing agents should not to be used.
4. Concrete surfaces on grade shall have been constructed with a vapor barrier to protect against the effects of vapor transmission and possible delamination of the system.

1.8 WARRANTY

A. Manufacturer’s standard warranty starting form the date of substantial completion.

PART 2 – PRODUCTS

2.1 FLOORING

A. Resinous Flooring: Abraison-, impact- and chemical resistant, industrial-aggregate-filled, resin-based, monolithic floor surfacing designed to produce a seamless floor and integral cove base.
1. System Materials:
a. Topping: Manufacturer’s standard Poly-Crete MD resin, hardener and aggregate.
b. The aggregate shall be Manufacturer’s standard Flintshot quartz aggregate.
d. Topcoat: Manufacturer’s standard Dur-A-Glaze Novolac resin and hardener.

2.2 MANUFACTURER

A. Basis-of-Design: Subject to compliance with requirements, provide product listed in the Material Schedule on the Drawings by Dur-A-Flex, Inc. or equivalent.

B. Requests for substitutions will be considered in accordance with provisions of Section 01 60 00 – Product Requirements.

2.3 PRODUCT REQUIREMENTS

A.	Topping	Poly-Crete MD
1.	Percent Reactive	100 %
2.	VOC	0 g/L
3.	Bond Strength to Concrete ASTM D 4541	>400 psi, substrates fails
4.	Compressive Strength, ASTM C 579	9,000 psi
5.	Tensile Strength, ASTM D 638	2,175 psi
6.	Impact Resistance @ 125 mils, MIL D-3134, No visible damage or deterioration	>160 inch lbs
B.	Topcoat	Dur-A-Glaze Novolac
1.	Percent Solids	100 %
2.	VOC	8 g/L
3.	Flexural Strength, ASTM C 580	5,500 psi
4.	Tensile Strength, ASTM D 638	2,500 psi
5.	Flexural Modulus, ASTM D 790	1.95 x 10^{6} psi
6.	Coefficient of thermal expansion ASTM D 696	2.2 x 10^{-5} in/in/F
7.	Water Absorption ASTM D 570	0.05 %, 24 hrs in water
8.	Abrasion Resistance, ASTM D 4060 C-10 Wheel, 1,000 gm load, 1,000 cycles	0.075 mg weight loss
9.	Flammability, ASTM D 636	Self-Extinguishing.
10.	Potlife @ 70 F	30 minutes
11.	Tack Free Time @ 70 F (ready for re-coat)	8-10 hours
12.	Cure Time for Traffic @ 70 F	24 hours
13.	Heat Resistance Limitation	250 F

2.3 ACCESSORIES

A. Aluminum Threshold: 3/8” high concrete to resinous floor transition.
1. Basis of design manufacturer: Schluter or equivalent.
2. Profile: Retrofit, Reno-U-Reducer
3. Material: Aluminum
4. Finish: Brushed Antique Bronze

B. Cove Cap: Metal cove cap to provide a straight, rounded edge at the top of integral cove.

C. Primer: Type recommended by manufacturer for substrate and body coats indicated.

D. Waterproofing Membrane: Type recommended by manufacturer for substrate and body coats indicated.

E. Reinforcing Membrane: Flexible resin formulation that is recommended by manufacturer for substrate and body coats indicated and that prevents substrate cracks from reflecting through resinous flooring.

F. Patching and Fill Material: Resinous product of or approved by resinous flooring manufacturer and recommended by manufacturer for application indicated.

PART 3 – EXECUTION

3.1 EXAMINATION

A. Examine substrates, areas and conditions, with Applicator present, for compliance with requirements for maximum moisture content, installation tolerances and other conditions affecting flooring performance.

1. Verify that substrates and conditions are satisfactory for flooring installation and comply with requirements specified.

3.2 PREPARATION

A. General

1. New and existing concrete surfaces shall be free of oil, grease, curing compounds, loose particles, moss,
algae growth, laitance, friable matter, dirt, and bituminous products.
2. Moisture Testing: Perform tests recommended by manufacturer and as follows.
. a. Application will proceed only when the vapor/moisture emission rates from the slab is less than and not higher than 20 lbs/1,000 sf/24 hrs.
b. Perform relative humidity test using is situ probes, ASTM F 2170. Proceed with installation only after substrates have a maximum 99% relative humidity level measurement.
c. If the relative humidity exceeds 99% then the Owner and/or Engineer shall be notified and advised of additional cost for the possible installation of a vapor mitigation system that has been approved by the manufacturer or other means to lower the value to the acceptable limit.
3. Mechanical surface preparation
a. Shot blast all surfaces to receive flooring system with a mobile steel shot, dust recycling machine.All surface and embedded accumulations of paint, toppings hardened concrete layers, laitance, power trowel finishes and other similar surface characteristics shall be completely removed leaving a bare concrete surface having a minimum profile of CSP 4-6 as described by the International Concrete Repair Institute.
b. Floor areas inaccessible to the mobile blast machines shall be mechanically abraded to the same degree of cleanliness, soundness and profile using diamond grinders, needle guns, bush hammers, or other suitable equipment.
c. Wherever a free edge will occur, including doorways, wall perimeters, expansion joints, columns, doorways, drains and equipment pads, a ¼ inch deep by 1/4 inch wide keyways shall be cut in.

d. Cracks and joints (non-moving) greater than 1/4 inch wide are to be chiseled or chipped-out and repaired per manufacturer's recommendations.

4. At spalled or worn areas, mechanically remove loose or delaminated concrete to a sound concrete and
patch per manufactures recommendations.

3.3 APPLICATION

A. General

1. The system shall be applied in three distinct steps as listed below:
   a. Substrate preparation
   b. Topping/overlay application with quartz aggregate broadcast.
   c. Topcoat application
2. Immediately prior to the application of any component of the system, the surface shall be dry and any remaining dust or loose particles shall be removed using a vacuum or clean, dry, oil-free compressed air.
3. The handling, mixing and addition of components shall be performed in a safe manner to achieve the desired results in accordance with the Manufacturer's recommendations.
4. The system shall follow the contour of the substrate unless pitching or other leveling work has been specified by the Architect.
5. A neat finish with well-defined boundaries and straight edges shall be provided by the Applicator.

B. Topping

1. The topping shall be applied as a self-leveling system as specified. The topping shall be applied in one lift with a nominal thickness of 3/16 inch.
2. The topping shall be comprised of three components, a resin, hardener and filler as supplied by the Manufacturer.
3. The hardener shall be added to the resin and thoroughly dispersed by suitably approved mechanical means. Aggregate shall then be added to the catalyzed mixture and mixed in a manner to achieve a homogenous blend.
4. The topping shall be applied over horizontal surfaces using a pin rake, trowels or other systems approved by the Manufacturer.
5. Immediately upon placing, the topping shall be degassed with a 15/16 inch spiked roller.
6. Flintshot aggregate shall be broadcast to excess into the wet material at the rate of 1 lbs/sf.
7. Allow material to fully cure. Vacuum, sweep and/or blow to remove all loose aggregate.

C. Topcoat

1. The topcoat shall be squeegee applied and back rolled with a coverage rate of 110 sf per kit.
2. The topcoat shall be comprised of a liquid resin and a liquid hardener that is mixed as a kit and installed per the manufacturer's recommendations.
3. The finish floor will have a nominal thickness of 1/4 inch.

3.4 FIELD QUALITY CONTROL

A. Tests, Inspection

1. The following tests shall be conducted by the Applicator:
   a. Temperature
      1. Air, substrate temperatures and, if applicable, dew point.

b. Coverage Rates
   1. Rates for all layers shall be monitored by checking quantity of material used against the area covered.

3.5 CLEANING AND PROTECTION

A. Cure flooring material in compliance with manufacturer's directions, taking care to prevent their contamination during stages of application and prior to completion of the curing process.
B. Remove masking. Perform detail cleaning at floor termination, to leave cleanable surface for subsequent work of other sections.

END OF SECTION 09 6516

SECTION 09 7700 – FIBERGLASS REINFORCED WALL PANELS

PART 1 - GENERAL

1.1 SUMMARY

A. Section Includes: Prefinished polyester glass reinforced plastic sheets.

1.2 RELATED SECTIONS

A. Section 06 1000 – Rough Carpentry

B. Section 09 2900 - Gypsum Board

C. Section 09 9123- Interior Painting

1.3 REFERENCES

A. American Society for Testing and Materials: Standard Specifications (ASTM)
   1. ASTM D 256 - Izod Impact Strengths (ft #/in)
   2. ASTM D 570 - Water Absorption (%)
   3. ASTM D 5319 - Standard Specification for Glass-Fiber Reinforced Polyester Wall and Ceiling Panels.
   4. ASTM E 84 - Standard Test Method for Surface Burning Characteristics of Building Materials.

1.4 SUBMITTALS

A. Product Data: Submit sufficient manufacturer's data to indicate compliance with these specifications, including:
   1. Preparation instructions and recommendations.
   2. Storage and handling requirements and recommendations.
   3. Installation methods.

B. Shop Drawings: Submit elevations of each wall showing location of paneling and trim members with respect to all discontinuities in the wall elevation.

C. Selection Samples: Submit manufacturer’s standard color pattern selection samples representing manufacturer's full range of available colors and patterns.

D. Samples for Verification: Submit appropriate section of panel for each finish selected indicating the color, texture, and pattern required.
   1. Submit complete with specified applied finish.
   2. Exposed Molding and Trim: Provide samples of each type, finish, and color.

E. Manufacturers Material Safety Data Sheets (MSDS) for adhesives, sealants and other pertinent materials prior to their delivery to the site.

1.5 QUALITY ASSURANCE

A. Conform to building code requirements for interior finish for smoke and flame spread requirements as tested in accordance with:
   1. ASTM E 84 (Method of test for surface burning characteristics of building Materials)

B. Sanitary Standards: System components and finishes to comply with:
   1. United States Department of Agriculture (USDA) / Food Safety & Inspection Services (FSIS) requirements for food preparation facilities, incidental contact.
   2. Food and Drug Administration (FDA) 2013 Food Code 6-101.11.

1.6 DELIVERY, STORAGE AND HANDLING

A. Deliver materials factory packaged on strong pallets.

B. Store panels and trim lying flat, under cover and protected from the elements. Allow panels to acclimate to room temperature (range of 60 to 75°F) for 48 hours prior to installation.

1.7 PROJECT CONDITIONS

A. Environmental Limitations: Building are to be fully enclosed prior to installation with sufficient heat (70°) and ventilation consistent with good working conditions for finish work

B. During installation and for not less than 48 hours before, maintain an ambient temperature and relative humidity within limits required by type of adhesive used and recommendation of adhesive manufacturer.
   1. Provide ventilation to disperse fumes during application of adhesive as recommended by the adhesive manufacturer.

1.8 WARRANTY

A. Furnish one-year guarantee against defects in material and workmanship.

PART 2 - PRODUCTS

2.1 ACCEPTABLE MANUFACTURER

A. Basis-of-Design: Subject to compliance with requirements, provide product listed in the Material Schedule on the Drawings by Marlite or equivalent.

B. Requests for substitutions will be considered in accordance with provisions of Section 01 60 00 – Product Requirements.

C. Product:
1. Standard FRP

2.2 PANELS

A. Fiberglass reinforced thermosetting polyester resin panel sheets complying with ASTM D 5319.
1. Dimensions:
   a. Thickness – 0.090 “ (2.29mm) nominal
   b. Width - 4'-0” (1.22m) nominal
   c. Length – indicated on the drawings nominal
2. Tolerance:
   a. Length and Width: +/-1/8 “ (3.175mm)
   b. Square - Not to exceed 1/8 “ for 8 foot (2.4m) panels or 5/32 “ (3.96mm) for 10 foot (2.4m) panels

B. Properties: Resistant to rot, corrosion, staining, denting, peeling, and splintering.

C. Back Surface: Smooth. Imperfections which do not affect functional properties are not cause for rejection.

D. Panel Finish:
1. Surface: As indicated on the Drawings.
2. Fire Rating: As indicated on the Drawings.

2.3 MOLDINGS

A. PVC Trim: Thin-wall semi-rigid extruded PVC.
1. M 350 Inside Corner, length as indicated on drawings.
2. M 360 Outside Corner, length as indicated on drawings.
3. M 370 Edge, length as indicated on drawings.
4. Color: As indicated on drawings.

2.4 ACCESSORIES

A. Fasteners: Non-staining nylon drive rivets.
1. Match panel colors.
2. Length to suit project conditions.

B. Adhesive: Either of the following construction adhesives complying with ASTM C 557.
1. Manufacturer’s Standard FRP Adhesive - Water- resistant, non-flammable adhesive.
2. Marlite C-915 Construction Adhesive - Flexible, water-resistant, solvent based adhesive, formulated for fast, easy application.

C. Sealant:
   1. Manufacturer's Standard MS-250 Clear Silicone Sealant.

PART 3 - EXECUTION

3.1 PREPARATION

A. Examine backup surfaces to determine that corners are plumb and straight, surfaces are smooth, uniform, clean and free from foreign matter, nails countersunk, joints and cracks filled flush and smooth with the adjoining surface.
   1. Verify that stud spacing does not exceed 24" (61cm) on-center.

B. Repair defects prior to installation.
   1. Level wall surfaces to panel manufacturer's requirements. Remove protrusions and fill indentations.

3.2 INSTALLATION

A. Comply with manufacturer's recommended procedures and installation sequence.

B. Cut sheets to meet supports allowing 1/8" (3 mm) clearance for every 8 foot (2.4m) of panel.
   1. Cut and drill with carbide tipped saw blades or drill bits, or cut with shears.
   2. Pre-drill fastener holes 1/8" (3mm) oversize with high speed drill bit.
      a. Space at 8" (200mm) maximum on center at perimeter, approximately 1" from panel edge.
      b. Space at in field in rows 16' (40.64cm) on center, with fasteners spaced at 12" (30.48 cm) maximum on center.

C. Apply panels to board substrate, above base, vertically oriented with seams plumb and pattern aligned with adjoining panels.
   1. Install panels with manufacturer's recommended gap for panel field and corner joints.
      a. Adhesive trowel and application method to conform to adhesive manufacturer's recommendations.
      b. Drive fasteners for snug fit. Do not over-tighten.

D. Apply panel moldings to all panel edges using silicone sealant providing for required clearances.
   1. All moldings must provide for a minimum 1/8 "(3mm) of panel expansion at joints and edges, to insure proper installation.
   2. Apply sealant to all moldings, channels and joints between the system and different materials to assure watertight installation.

3.3 CLEANING

A. Remove excess sealant from panels and moldings. Wipe panel down using a damp cloth and mild soap solution or cleaner.

B. Refer to manufacturer's specific cleaning recommendations Do not use abrasive cleaners.

END OF SECTION 09 7700

SECTION 09 9113 - EXTERIOR PAINTING

PART 1 - GENERAL

1.1 RELATED DOCUMENTS

A. Drawings and general provisions of the Contract, including General and Supplementary Conditions and Division 01 Specification Sections, apply to this Section.

1.2 SUMMARY

A. Section Includes:

1. Primers.
2. Finish coatings.

B. Related Requirements:

1. Section 05 5000 "Metal Fabrications" for shop priming metal fabrications.
2. Section 05 5213 "Pipe and Tube Railings" for shop priming pipe and tube railings.

1.3 ACTION SUBMITTALS

A. Product Data: For each type of product.

1. Include preparation requirements and application instructions.
2. Indicate VOC content.

B. Samples: For each type of topcoat product.

C. Samples for Initial Selection: For each type of topcoat product.

D. Product Schedule: Use same designations indicated on Drawings and in the Exterior Painting Schedule to cross-reference paint systems specified in this Section. Include color designations.

1.4 DELIVERY, STORAGE, AND HANDLING

A. Store materials not in use in tightly covered containers in well-ventilated areas with ambient temperatures continuously maintained at not less than 45 deg F.

1. Maintain containers in clean condition, free of foreign materials and residue.
2. Remove rags and waste from storage areas daily.

1.5 FIELD CONDITIONS

A. Apply paints only when temperature of surfaces to be painted and ambient air temperatures are between 50 and 95 deg F.

B. Do not apply paints in snow, rain, fog, or mist; when relative humidity exceeds 85 percent; at temperatures less than 5 deg F above the dew point; or to damp or wet surfaces.

PART 2 - PRODUCTS

2.1 MANUFACTURERS

A. Manufacturers: Subject to compliance with requirements, provide products by one of the following:

1. Basis of Design: The Sherwin Williams Company: Refer to drawings.
   a. Alternates:
      1) Benjamin Moore.
      2) PPG - Pittsburgh Paints and stains.

B. Source Limitations: Obtain each paint product from single source from single manufacturer.

2.2 PAINT PRODUCTS, GENERAL

A. Material Compatibility:

1. Provide materials for use within each paint system that are compatible with one another and substrates indicated, under conditions of service and application as demonstrated by manufacturer based on testing and field experience.
2. For each coat in a paint system, provide products recommended in writing by topcoat manufacturer for use in paint system and on substrate indicated.

B. Colors: As indicated on drawings .

C. Finish: As indicated on drawings.

2.3 PRIMERS

A. Exterior, Alkali-Resistant, Water-Based Primer: Pigmented, water-based primer formulated for use on alkaline surfaces, such as exterior plaster, vertical concrete, and masonry.

B. Exterior, Latex Wood Primer: White, waterborne-emulsion primer formulated for resistance to extractive bleeding, mold, and microbials; for hiding stains; and for use on exterior wood subject to extractive bleeding.

C. Exterior, Latex Block Filler: Water-based, pigmented, high-solids, emulsion coating formulated to bridge and fill porous surfaces of exterior concrete masonry units in preparation for specified subsequent coatings.

1. Minimum Solids Content: Manufacturer's standard percentage solids by volume.

D. Water-Based Bonding Primer: Pigmented, water-based-emulsion primer formulated for exterior use and to promote adhesion of subsequent specified coatings.

E. Water-Based, Rust-Inhibitive Primer: Corrosion-resistant, water-based-emulsion primer formulated for resistance to flash rusting when applied to cleaned, exterior ferrous metals subject to mildly corrosive environments.

F. Water-Based, Galvanized-Metal Primer: Corrosion-resistant, pigmented, acrylic primer; formulated for use on cleaned/etched, exterior, galvanized metal to prepare it for subsequent water-based coatings.

2.4 FINISH COATINGS

A. Exterior Latex Paint, Flat: Water-based, pigmented coating; formulated for alkali, mold, microbial, and water resistance and for use on exterior surfaces, such as portland cement plaster, concrete, and primed wood.

B. Exterior Latex Paint, Low Sheen: Water-based, pigmented coating; formulated for alkali, mold, microbial, and water resistance and for use on exterior surfaces, such as portland cement plaster, concrete, and primed wood.

C. Exterior Latex Paint, Semigloss: Water-based, pigmented emulsion coating formulated for alkali, mold, microbial, and water resistance and for use on exterior surfaces, such as masonry, portland cement plaster, and primed wood and metal.

D. Exterior Latex Paint, Gloss: Water-based, pigmented, acrylic-copolymer-emulsion coating formulated for alkali, mold, microbial, scrub, blocking (sticking of two painted surfaces), and water resistance and for use on exterior, primed, wood and metal trim, sashes, frames, and doors.

E. Exterior Alkyd Enamel, Flat: Solvent-based, pigmented, alkyd enamel formulated for mold, microbial, and water resistance and for use on exterior, primed, wood and metal surfaces.

F. Exterior Alkyd Enamel, Semigloss: Solvent-based, pigmented, alkyd enamel formulated for mold, microbial, and water resistance and for use on exterior, primed, wood and metal surfaces.

G. Exterior Alkyd Enamel, Gloss: Solvent-based, pigmented, alkyd enamel formulated for mold, microbial, and water resistance and for use on exterior, primed, wood and metal surfaces.

H. Quick-Drying Alkyd Enamel, Semigloss: Solvent-based, alkyd or modified-alkyd enamel formulated for quick-drying capabilities and for use on exterior, primed, metal and dimensionally stable wood surfaces.

I. Quick-Drying Alkyd Enamel, Gloss: Solvent-based, alkyd or modified-alkyd enamel formulated for quick-drying capabilities and for use on exterior, primed, metal and dimensionally stable wood surfaces.

PART 3 - EXECUTION

3.1 EXAMINATION

A. Examine substrates and conditions, with Applicator present, for compliance with requirements for maximum moisture content and other conditions affecting performance of the Work.

B. Maximum Moisture Content of Substrates: When measured with an electronic moisture meter as follows:

1. Concrete: 12 percent.
2. Fiber-Cement Board: 12 percent.
3. Wood: 15 percent.
4. Portland Cement Plaster: 12 percent.
5. Gypsum Board: 12 percent.

C. Portland Cement Plaster Substrates: Verify that plaster is fully cured.

D. Exterior Gypsum Board Substrates: Verify that finishing compound is dry and sanded smooth.

E. Verify suitability of substrates, including surface conditions and compatibility, with finishes and primers.

F. Proceed with coating application only after unsatisfactory conditions have been corrected.

1. Application of coating indicates acceptance of surfaces and conditions.

3.2 PREPARATION

A. Comply with manufacturer's written instructions applicable to substrates and paint systems indicated.

B. Remove hardware, covers, plates, and similar items already in place that are removable and are not to be painted. If removal is impractical or impossible because of size or weight of item, provide surface-applied protection before surface preparation and painting.

1. After completing painting operations, use workers skilled in the trades involved to reinstall items that were removed. Remove surface-applied protection.

C. Clean substrates of substances that could impair bond of paints, including dust, dirt, oil, grease, and incompatible paints and encapsulants.

1. Remove incompatible primers and reprime substrate with compatible primers or apply tie coat as required to produce paint systems specified in this Section.

D. Concrete Substrates: Remove release agents, curing compounds, efflorescence, and chalk. Do not paint surfaces if moisture content or alkalinity of surfaces to be painted exceeds that permitted in manufacturer's written instructions.

E. Steel Substrates: Remove rust, loose mill scale, and shop primer if any. Clean using methods recommended in writing by paint manufacturer .

F. Shop-Primed Steel Substrates: Clean field welds, bolted connections, and areas where shop paint is abraded. Paint exposed areas with the same material as used for shop priming to comply with SSPC-PA 1 for touching up shop-primed surfaces.

G. Galvanized-Metal Substrates: Remove grease and oil residue from galvanized sheet metal by mechanical methods to produce clean, lightly etched surfaces that promote adhesion of subsequently applied paints.

H. Wood Substrates:

1. Scrape and clean knots. Before applying primer, apply coat of knot sealer recommended in writing by topcoat manufacturer for exterior use in paint system indicated.
2. Sand surfaces that will be exposed to view, and remove sanding dust.
3. Prime edges, ends, faces, undersides, and backsides of wood.
4. After priming, fill holes and imperfections in the finish surfaces with putty or plastic wood filler. Sand smooth when dried.

I. Plastic Trim Fabrication Substrates: Remove dust, dirt, and other foreign material that might impair bond of paints to substrates.

3.3 INSTALLATION

A. Apply paints in accordance with manufacturer's written instructions.

1. Use applicators and techniques suited for paint and substrate indicated.
2. Paint surfaces behind movable items same as similar exposed surfaces. Before final installation, paint surfaces behind permanently fixed items with prime coat only.
3. Paint exterior side and edges of exterior doors and entire exposed surface of exterior door frames.
4. Paint entire exposed surface of window frames and sashes.
5. Do not paint over labels of independent testing agencies or equipment name, identification, performance rating, or nomenclature plates.
6. Primers specified in the Exterior Painting Schedule may be omitted on items that are factory primed or factory finished if compatible with intermediate and topcoat coatings and acceptable to intermediate and topcoat paint manufacturers.

B. Tint undercoats same color as topcoat, but tint each undercoat a lighter shade to facilitate identification of each coat if multiple coats of same material are to be applied. Provide sufficient difference in shade of undercoats to distinguish each separate coat.

C. If undercoats or other conditions show through topcoat, apply additional coats until cured film has a uniform paint finish, color, and appearance.

D. Apply paints to produce surface films without cloudiness, spotting, holidays, laps, brush marks, roller tracking, runs, sags, ropiness, or other surface imperfections. Cut in sharp lines and color breaks.

3.4 CLEANING AND PROTECTION

A. At end of each workday, remove rubbish, empty cans, rags, and other discarded materials from Project site.

1. Do not clean equipment with free-draining water and prevent solvents, thinners, cleaners, and other contaminants from entering into waterways, sanitary and storm drain systems, and ground.
2. Dispose of contaminants in accordance with requirements of authorities having jurisdiction.
3. Allow empty paint cans to dry before disposal.

B. After completing paint application, clean spattered surfaces. Remove spattered paints by washing, scraping, or other methods. Do not scratch or damage adjacent finished surfaces.

C. Protect work of other trades against damage from paint application. Correct damage to work of other trades by cleaning, repairing, replacing, and refinishing, as approved by Architect, and leave in an undamaged condition.

D. At completion of construction activities of other trades, touch up and restore damaged or defaced painted surfaces.

END OF SECTION 09 9113

SECTION 09 9123 - INTERIOR PAINTING

PART 1 - GENERAL

1.1 RELATED DOCUMENTS

A. Drawings and general provisions of the Contract, including General and Supplementary Conditions and Division 01 Specification Sections, apply to this Section.

1.2 SUMMARY

A. Section Includes:

1. Primers.
2. Water-based finish coatings.

B. Related Requirements:

1. Section 05 5000 "Metal Fabrications" for shop priming metal fabrications.
2. Section 05 5213 "Pipe and Tube Railings" for shop priming pipe and tube railings.

1.3 ACTION SUBMITTALS

A. Product Data: For each type of product. Include preparation requirements and application instructions.

1. Include preparation requirements and application instructions.
2. Indicate VOC content.

B. Samples: For each type of topcoat product.

C. Samples for Initial Selection: For each type of topcoat product.

D. Product Schedule: Use same designations indicated on Drawings and in the Interior Painting Schedule to cross-reference paint systems specified in this Section. Include color designations.

1.4 QUALITY ASSURANCE

1.5 DELIVERY, STORAGE, AND HANDLING

A. Store materials not in use in tightly covered containers in well-ventilated areas with ambient temperatures continuously maintained at not less than 45 deg F.

1. Maintain containers in clean condition, free of foreign materials and residue.

2. Remove rags and waste from storage areas daily.

1.6 FIELD CONDITIONS

A. Apply paints only when temperature of surfaces to be painted and ambient air temperatures are between 50 and 95 deg F.

B. Do not apply paints when relative humidity exceeds 85 percent; at temperatures of less than 5 deg F above the dew point; or to damp or wet surfaces.

PART 2 - PRODUCTS

2.1 MANUFACTURERS

A. Manufacturers: Subject to compliance with requirements, provide products by one of the following:

1. Basis of Design: The Sherwin Williams Company: Refer to drawings.
   a. Alternates:
      1) Benjamin Moore.
      2) PPG - Pittsburgh Paints and stains.

B. Source Limitations: Obtain each paint product from single source from single manufacturer.

2.2 PAINT PRODUCTS, GENERAL

A. Material Compatibility:

1. Materials for use within each paint system shall be compatible with one another and substrates indicated, under conditions of service and application as demonstrated by manufacturer, based on testing and field experience.
2. For each coat in a paint system, products shall be recommended in writing by topcoat manufacturers for use in paint system and on substrate indicated.

B. Colors: As indicated on drawings .

2.3 PRIMERS

A. Interior Latex Primer Sealer: Water-based latex sealer used on new interior plaster, concrete, and gypsum wallboard surfaces.

B. Interior Latex Primer for Wood: Waterborne-emulsion primer formulated for resistance to extractive bleeding, mold, and microbials; for hiding stains; and for use on interior wood subject to extractive bleeding.

C. Water-Based Rust-Inhibitive Primer: Corrosion-resistant, water-based-emulsion primer formulated for resistance to flash rusting when applied to cleaned, interior ferrous metals subject to mildly corrosive environments.

D. Water-Based Galvanized-Metal Primer: Corrosion-resistant, acrylic primer; formulated for use on cleaned/etched, exterior, galvanized metal to prepare it for subsequent water-based coatings.

2.4 WATER-BASED FINISH COATS

A. Interior, Latex, Flat: Pigmented, water-based paint for use on primed/sealed interior plaster and gypsum board, and on primed wood and metals.

B. Interior, Latex, Eggshell: Pigmented, water-based paint for use on primed/sealed interior plaster and gypsum board, and on primed wood and metals.

C. Interior, Latex, Satin: Pigmented, water-based paint for use on primed/sealed interior plaster and gypsum board, and on primed wood and metals.

D. Interior, Latex, Semigloss: Pigmented, water-based paint for use on primed/sealed interior plaster and gypsum board, and on primed wood and metals.

2.5 SOLVENT-BASED FINISH COATS

A. Interior, Alkyd, Eggshell: Pigmented, solvent-based alkyd paint for use on primed/sealed interior plaster, gypsum, wood, and metal walls primarily in residential and moderate traffic commercial environments.

1. Gloss and Sheen Level: Manufacturer's standard eggshell finish .

B. Interior, Alkyd, Semigloss: Pigmented, solvent-based alkyd paint for use on primed/sealed interior plaster, gypsum, wood, and metal walls primarily in residential and moderate traffic commercial environments.

1. Gloss Level: Manufacturer's standard semigloss finish .

2.6 FLOOR SEALERS AND PAINTS

A. Water-Based Concrete Floor Sealer: Clear, water-based, acrylic-copolymer-emulsion sealer formulated for oil, gasoline, alkali, and water resistance and for use on concrete traffic surfaces.

PART 3 - EXECUTION

3.1 EXAMINATION

A. Examine substrates and conditions, with Applicator present, for compliance with requirements for maximum moisture content and other conditions affecting performance of the Work.

B. Maximum Moisture Content of Substrates: When measured with an electronic moisture meter as follows:

1. Concrete: 12 percent.
2. Fiber-Cement Board: 12 percent.
3. Masonry (Clay and CMUs): 12 percent.
4. Wood: 15 percent.
5. Gypsum Board: 12 percent.
6. Plaster: 12 percent.

C. Gypsum Board Substrates: Verify that finishing compound is sanded smooth.

D. Plaster Substrates: Verify that plaster is fully cured.

E. Spray-Textured Ceiling Substrates: Verify that surfaces are dry.

F. Verify suitability of substrates, including surface conditions and compatibility, with existing finishes and primers.

G. Proceed with coating application only after unsatisfactory conditions have been corrected.

1. Application of coating indicates acceptance of surfaces and conditions.

3.2 PREPARATION

A. Comply with manufacturer's written instructions and recommendations applicable to substrates and paint systems indicated.

B. Remove hardware, covers, plates, and similar items already in place that are removable and are not to be painted. If removal is impractical or impossible because of size or weight of item, provide surface-applied protection before surface preparation and painting.

1. After completing painting operations, use workers skilled in the trades involved to reinstall items that were removed. Remove surface-applied protection if any.

C. Clean substrates of substances that could impair bond of paints, including dust, dirt, oil, grease, and incompatible paints and encapsulants.

1. Remove incompatible primers and reprime substrate with compatible primers or apply tie coat as required to produce paint systems indicated.

D. Concrete Substrates: Remove release agents, curing compounds, efflorescence, and chalk. Do not paint surfaces if moisture content or alkalinity of surfaces to be painted exceeds that permitted in manufacturer's written instructions.

E. Galvanized-Metal Substrates: Remove grease and oil residue from galvanized sheet metal by mechanical methods to produce clean, lightly etched surfaces that promote adhesion of subsequently applied paints.

F. Wood Substrates:

1. Scrape and clean knots, and apply coat of knot sealer before applying primer.
2. Sand surfaces that will be exposed to view, and dust off.
3. Prime edges, ends, faces, undersides, and backsides of wood.
4. After priming, fill holes and imperfections in the finish surfaces with putty or plastic wood filler. Sand smooth when dried.

3.3 INSTALLATION

A. Apply paints according to manufacturer's written instructions.

1. Use applicators and techniques suited for paint and substrate indicated.
2. Paint surfaces behind movable equipment and furniture same as similar exposed surfaces. Before final installation, paint surfaces behind permanently fixed equipment or furniture with prime coat only.
3. Paint front and backsides of access panels, removable or hinged covers, and similar hinged items to match exposed surfaces.
4. Do not paint over labels of independent testing agencies or equipment name, identification, performance rating, or nomenclature plates.
5. Primers specified in painting schedules may be omitted on items that are factory primed or factory finished if acceptable to topcoat manufacturers.

B. Tint each undercoat a lighter shade to facilitate identification of each coat if multiple coats of same material are to be applied. Tint undercoats to match color of topcoat, but provide sufficient difference in shade of undercoats to distinguish each separate coat.

C. If undercoats or other conditions show through topcoat, apply additional coats until cured film has a uniform paint finish, color, and appearance.

D. Apply paints to produce surface films without cloudiness, spotting, holidays, laps, brush marks, roller tracking, runs, sags, ropiness, or other surface imperfections. Cut in sharp lines and color breaks.

3.4 CLEANING AND PROTECTION

A. At end of each workday, remove rubbish, empty cans, rags, and other discarded materials from Project site.

1. Do not clean equipment with free-draining water and prevent solvents, thinners, cleaners, and other contaminants from entering into waterways, sanitary and storm drain systems, and ground.
2. Dispose of contaminants in accordance with requirements of authorities having jurisdiction.
3. Allow empty paint cans to dry before disposal.

B. After completing paint application, clean spattered surfaces. Remove spattered paints by washing, scraping, or other methods. Do not scratch or damage adjacent finished surfaces.

C. Protect work of other trades against damage from paint application. Correct damage to work of other trades by cleaning, repairing, replacing, and refinishing, as approved by Architect, and leave in an undamaged condition.

D. At completion of construction activities of other trades, touch up and restore damaged or defaced painted surfaces.

3.5 INTERIOR PAINTING SCHEDULE

A. Topcoat finish as indicated on drawings

B. Concrete Substrates, Traffic Surfaces:

1. Water-Based Concrete Floor Sealer System :
   a. First Coat: Matching topcoat.
   b. Topcoat: Water-based concrete floor sealer.

C. CMU Substrates:

1. Latex System :
   a. Block Filler: Interior/exterior latex block filler.
   b. Intermediate Coat: Matching topcoat.
   c. Topcoat: Interior, latex, flat eggshell satin semigloss .

D. Steel Substrates:

1. Latex System, Alkyd Primer :
   a. Prime Coat: Shop primer specified in Section where substrate is specified.
   b. Intermediate Coat: Matching topcoat.
   c. Topcoat: Interior, latex, flat eggshell satin semigloss .
2. Latex over Shop-Applied Quick-Drying Shop Primer System :
   a. Prime Coat: Quick-dry primer for shop application.
   b. Intermediate Coat: Matching topcoat.
   c. Topcoat: Interior, latex, flat eggshell satin semigloss .

E. Galvanized-Metal Substrates:

1. Latex System :
   a. Prime Coat: Water-based galvanized primer.

b. Intermediate Coat: Matching topcoat.
c. Topcoat: Interior, latex, flat eggshell satin semigloss .

F. Aluminum (Not Anodized or Otherwise Coated) Substrates:

1. Latex System :
   a. Prime Coat: Quick-dry primer for aluminum.
   b. Intermediate Coat: Matching topcoat.
   c. Topcoat: Interior, latex, flat eggshell satin semigloss .

G. Finish Carpentry: Wood trim Doors Windows .

1. Latex over Latex Primer System :
   a. Prime Coat: Interior latex primer for wood.
   b. Intermediate Coat: Matching topcoat.
   c. Topcoat: Interior, latex, flat eggshell satin semigloss .

H. Architectural Woodwork: casework.

1. Latex over Latex Primer System :
   a. Prime Coat: Interior latex primer for wood.
   b. Intermediate Coat: Matching topcoat.
   c. Topcoat: Interior, latex, flat eggshell satin semigloss .

I. Gypsum Board Substrates:

1. Latex over Latex Sealer System :
   a. Prime Coat: Interior latex primer sealer.
   b. Intermediate Coat: Matching topcoat.
   c. Topcoat: Interior, latex, flat eggshell satin semigloss .

END OF SECTION 09 9123

SECTION 10 1400 - SIGNAGE

PART 1 - GENERAL

1.1 SECTION INCLUDES

A. Room and door signs.

B. Interior directional and informational signs.

C. Building identification signs.

D. Exterior Signage

1.2 REFERENCE STANDARDS

A. 36 CFR 1191 - Americans with Disabilities Act (ADA) Accessibility Guidelines for Buildings and Facilities; Architectural Barriers Act (ABA) Accessibility Guidelines current edition.

B. ADA Standards - Americans with Disabilities Act (ADA) Standards for Accessible Design 2010.

C. ICC A117.1 - Accessible and Usable Buildings and Facilities 2017.

1.3 SUBMITTALS

A. See Section 01 3000 - Administrative Requirements, for submittal procedures.

B. Product Data: Manufacturer's printed product literature for each type of sign, indicating sign styles, font, foreground and background colors, locations, overall dimensions of each sign.

C. Signage Schedule: Provide information sufficient to completely define each sign for fabrication, including room number, room name, other text to be applied, sign and letter sizes, fonts, and colors.

1. When room numbers to appear on signs differ from those on drawings, include the drawing room number on schedule.
2. When content of signs is indicated to be determined later, request such information from Owner through Architect at least 2 months prior to start of fabrication; upon request, submit preliminary schedule.
3. Submit for approval by Owner through Architect prior to fabrication.

D. Samples: Submit two samples of each type of sign, of size similar to that required for project, illustrating sign style, font, and method of attachment.

E. Selection Samples: Where colors are not specified, submit two sets of color selection charts or chips.

F. Manufacturer's Qualification Statement.

1.4 QUALITY ASSURANCE

A. Manufacturer Qualifications: Company specializing in manufacturing the products specified in this section with minimum three years of documented experience.

1. All building mounted and free standing signage is to contain the official Hampton Inn & Suites logo and must be manufactured by one of the approved signage venders. The list of vendors can found on the Hilton architecture, design, and construction website.

1.5 DELIVERY, STORAGE, AND HANDLING

A. Package signs as required to prevent damage before installation.

B. Package room and door signs in sequential order of installation, labeled by floor or building.

C. Store tape adhesive at normal room temperature.

1.6 FIELD CONDITIONS

A. Do not install tape adhesive when ambient temperature is lower than recommended by manufacturer.

B. Maintain this minimum temperature during and after installation of signs.

PART 2 PRODUCTS

2.1 MANUFACTURERS

A. Flat Signs:
1. All Pro Signs; www.allprosignsinc.com
2. ASI Modulex; www.asisignage.com
3. Boyd Sign Systems; www.boydsignsystems.com
4. Cornelius Signage (Forms + Surfaces); www.corneliussignage.com/
5. Identity Group; www.identitygroup.com

B. Other Signs - Exterior Signage:

2.2 SIGNAGE APPLICATIONS

A. Accessibility Compliance: Signs are required to comply with ADA Standards and ICC A117.1, unless otherwise indicated; in the event of conflicting requirements, comply with the most comprehensive and specific requirements.

B. Refer to “Sign Manual” for sign types, designs, and graphic information.

C. Room and Door Signs: Provide a sign for every doorway, whether it has a door or not, not including corridors, lobbies, and similar open areas.
1. Provide "tactile" signage, with letters raised minimum 1/32 inch and Grade II braille.
2. Character Height: As indicated on drawings
3. Office Doors: Identify with room numbers to be determined later, not the numbers indicated on drawings.
4. Hospitality Suites: Identify with room numbers to be determined later, not the numbers indicated on drawings.
5. Service Rooms: Identify with room names and numbers to be determined later, not those indicated on drawings.
6. Rest Rooms: Identify with pictograms, the names "MEN" and "WOMEN", and braille.

7. Elevator lobby: Identify with pictograms, include text "IN FIRE EMERGENCY, DO NOT USE ELEVATORS. USE EXIT STAIRS", and braille.
8. Fitness Center: Identify with room name, and hours of operation provided by owner.

D. Interior Directional and Informational Signs:
1. Sign Type: Same as signage type B
2. Sizes: As indicated on drawings.
3. Wording of signs is scheduled on drawings.
4. Where suspended, ceiling mounted, or projecting from wall signs are indicated, provide two-sided signs with same information on both sides.

E. Building Identification Signs:
1. Use individual metal letters.
2. Mount on outside wall in location indicated on drawings.

F. Other Dimensional Letter Signs: Wall-mounted.
1. Exterior: Allow for total of 50 letters, height as indicated on drawings, 1/8 inch inch extruded PVC painted in a contrasting color.
a. Location: Building address at main entry, Clearance height into parking garage, or as indicated on drawings

2.3 SIGN TYPES

A. Type A - Permanent room and spaces Signage; include identification signs, exit passageways, exit discharge, and exit stairways. Refer to drawings for additional information.
1. Flat Signs: Signage media without frame.
2. Type: Permanent rooms and spaces and include identification signs, exit passageways, exit discharge, and exit stairways. Refer to drawings for additional information.
3. Edges: As indicated on drawings.
4. Corners: Square.
5. Graphics and Size: 8 inches (L) x 4 inches (H), digital graphics with laminated backs, mounted to a second surface of 1/8 inch Plexiglas with a 45-degree edge, U.N.O.
6. Backer material: One-quarter inch thick acrylic painted, finish as noted on drawings
7. Backer profile: Refer to drawings, A recessed area for the Plexiglas sign must be provided. The ogee edge shall have a 1/16 inch recess and the straight edge, a 1⁄8 inch recess..
8. Wall Mounting of One-Sided Signs: Tape adhesive.
9. Color and Font: Unless otherwise indicated:
a. Character Font: Sans serif, Characters shall not be italic, oblique, script, highly decorative, or of other unusual forms.
b. Character Case: Upper case only.
c. Background Color: As scheduled.
10. Character Color: Contrasting color.
11. Pictogram: When a pictogram is used to designate a permanent room or space, it must have a raised character text description, duplicated in Grade 2 Braille. The pictogram must be ocated in a 6 inch field, clear of any characters or Braille. Refer to drawings for additional information

B. Type B - Information or directional signage
   1. Flat Signs: Signage media without frame.
   2. Edges: Square.
   3. Corners: Square.
   4. Wall Mounting of One-Sided Signs: Tape adhesive.
   5. Color and Font: Unless otherwise indicated:
   6. Character Font: Sans serif, Characters shall not be italic, oblique, script, highly decorative, or of other unusual forms.
   7. Character Case: Upper and lower case (title case).
   8. Background Color: As scheduled.
   9. Character Color: Contrasting color.
   10. Symbols: When a sign includes symbols that provide information, such as the International Sign of Accessibility or a No Smoking symbol, no text descriptor is required; refer to drawing for additional information

C. Type C - Parking Signs
   1. Flat Signs: Signage media without frame and graphics as indicated on drawings
   2. Corners: Radiused.
   3. Material: Aluminum, 18 gauge steel
   4. Wall Mounting of One-Sided Signs: Exposed screws

2.4 EXTERIOR BUILDING SIGNAGE

A. Metal and finish: As indicated on drawings

B. Letter Height: As indicated on drawings.

C. Character Font: As indicated on drawings..

D. Character Case: Upper and lower case (title case).

E. Mounting: As indicated on drawings.

2.5 ACCESSORIES

A. Exposed Screws: Stainless steel.

B. Tape Adhesive: Double sided tape, permanent adhesive.

PART 3 EXECUTION

3.1 EXAMINATION

A. Verify that substrate surfaces are ready to receive work.

3.2 INSTALLATION

A. Install in accordance with manufacturer's instructions.

B. Install neatly, with horizontal edges level.

C. Protect from damage until Date of Substantial Completion; repair or replace damaged items.

A. END OF SECTION 10 1400

SECTION 10 2600 - WALL AND DOOR PROTECTION

PART 1 - GENERAL

1.1 RELATED DOCUMENTS

A. Drawings and general provisions of the Contract, including General and Supplementary Conditions and Division 01 Specification Sections, apply to this Section.

1.2 SUMMARY

A. Section Includes:

1. Corner guards.
2. Abuse resistant wall base.

B. Related Requirements:

1. Section 09 2900 “Gypsum board” for gypsum backer board coordination.

1.3 ACTION SUBMITTALS

A. Product Data: For each type of product.

1. Include construction details, material descriptions, impact strength, dimensions of individual components and profiles, and finishes.

B. Shop Drawings: For each type of wall and door protection showing locations and extent.

1. Include plans, elevations, sections, and attachment details.

C. Samples for Initial Selection: For each type of impact-resistant wall-protection unit indicated, in each color and texture specified.

1. Include Samples of accent strips and accessories to verify color and finish selection.

D. Samples for Verification: For each type of exposed finish on the following products, prepared on Samples of size indicated below:

1. Corner Guards: 12 inches long. Include example top caps.
2. Abuse-Resistant Wall Base: 12” inches long.

1.4 INFORMATIONAL SUBMITTALS

A. Sample Warranty: For special warranty.

1.5 CLOSEOUT SUBMITTALS

A. Maintenance Data: For each type of wall and door protection product to include in maintenance manuals.

1. Include recommended methods and frequency of maintenance for maintaining best condition of plastic covers under anticipated traffic and use conditions. Include precautions against using cleaning materials and methods that may be detrimental to finishes and performance.

1.6 DELIVERY, STORAGE, AND HANDLING

A. Store wall and door protection in original undamaged packages and containers inside well-ventilated area protected from weather, moisture, soiling, extreme temperatures, and humidity.

1.7 WARRANTY

A. Special Warranty: Manufacturer agrees to repair or replace components of wall- protection units that fail in materials or workmanship within specified warranty period.

1. Failures include, but are not limited to, the following:
   a. Structural failures including detachment of components from each other or from the substrates, delamination, and permanent deformation beyond normal use.
   b. Deterioration of metals, metal finishes, and other materials beyond normal use.
2. Warranty Period: Five years from date of Substantial Completion.

PART 2 - PRODUCTS

2.1 MANUFACTURERS

A. Source Limitations: Obtain wall-protection products of each type from single source from single manufacturer.

B. Basis-of-Design Product: Subject to compliance with requirements, provide product specified below shall by the listed manufacturer or approved equal.

C. Requests for substitutions will be considered in accordance with provisions 01 60 00 – Product Requirements.

2.2 CORNER GUARDS

A. Surface-Mounted, Stainless Steel Corner Guards: Fabricated as one piece,16 gauge, #4 stainless steel; with formed edges.

1. Manufacturers: Subject to compliance with requirements, provide products by Cap Industries or equivalent

B. Finish: Satin

C. Wing Size: As indicated on drawings

D. Corner Radius: As indicated on drawings

E. Mounting: Adhesive and stainless-steel flat anchor screws as indicated on drawings.

2.3 ABUSE RESISTANT WALL BASE

A. Surface-Mounted, Stainless Steel Wall Base: Fabricated as one piece, V2A brushed stainless steel; with formed edges.

1. Manufacturers: Subject to compliance with requirements, provide products by Schluter Systems or equivalent.

B. Finish: Brushed stainless steel.

C. Dimensions: As indicated on drawings

D. Size: As indicated on drawings.

E. Mounting: Manufacturer's standard as indicated on drawings.

2.4 FABRICATION

A. Fabricate wall and door protection according to requirements indicated for design, performance, dimensions, and member sizes, including thicknesses of components.

B. Factory Assembly: Assemble components in factory to greatest extent possible to minimize field assembly. Disassemble only as necessary for shipping and handling.

C. Quality: Fabricate components with uniformly tight seams and joints and with exposed edges rolled. Provide surfaces free of wrinkles, chips, dents, uneven coloration, and other imperfections. Fabricate members and fittings to produce flush, smooth, and rigid hairline joints.

2.5 FINISHES

A. Protect finishes on exposed surfaces from damage by applying a strippable, temporary protective covering before shipping.

B. Appearance of Finished Work: Noticeable variations in same piece are not acceptable. Variations in appearance of adjoining components are acceptable if they are within the range of approved Samples and are assembled or installed to minimize contrast.

PART 3 - EXECUTION

3.1 EXAMINATION

A. Examine substrates and wall areas, with Installer present, for compliance with requirements for installation tolerances, fire rating, and other conditions affecting performance of the Work.

B. Examine walls to which wall protection will be attached for blocking, grounds, and other solid backing that have been installed in the locations required for secure attachment of support fasteners.

1. For wall protection attached with adhesive, verify compatibility with and suitability of substrates, including compatibility with existing finishes or primers.

C. Proceed with installation only after unsatisfactory conditions have been corrected.

3.2 PREPARATION

A. Complete finishing operations, including painting, before installing wall protection.

B. Before installation, clean substrate to remove dust, debris, and loose particles.

3.3 INSTALLATION

A. Installation Quality: Install wall protection according to manufacturer's written instructions, level, plumb, and true to line without distortions. Do not use materials with chips, cracks, voids, stains, or other defects that might be visible in the finished Work.

B. Mounting Heights: Install wall protection in locations and at mounting heights indicated on Drawings.

C. Accessories: Provide splices, mounting hardware, anchors, trim, joint moldings, and other accessories required for a complete installation.

1. Provide anchoring devices and suitable locations to withstand imposed loads.
2. Where splices occur in horizontal runs of more than 20 feet, splice aluminum retainers and plastic covers at different locations along the run, but no closer than 12 inches apart.

3.4 CLEANING

A. Immediately after completion of installation, clean stainless steel corner guards and wall bases and accessories using a standard cleaning agent as recommended by manufacturer.

B. Remove excess adhesive using methods and materials recommended in writing by manufacturer.

END OF SECTION 10 2600

SECTION 10 4413 - FIRE PROTECTION CABINETS

PART 1 - GENERAL

1.1 SUMMARY

A. Section Includes:

1. Fire-protection cabinets for the following:
   a. Portable fire extinguisher.

B. Related Requirements:

1. Section 10 4416 "Fire Extinguishers" for portable, hand-carried fire extinguishers accommodated by fire-protection cabinets

1.2 PREINSTALLATION CONFERENCE

1.3 ACTION SUBMITTALS

A. Product Data: For each type of product.

1. Show door hardware, cabinet type, trim style, and panel style. Include roughing-in dimensions and details showing recessed-, semirecessed-, or surface-mounting method and relationships of box and trim to surrounding construction.

1.4 CLOSEOUT SUBMITTALS

A. Maintenance Data: For fire-protection cabinets to include in maintenance manuals.

1.5 COORDINATION

A. Coordinate size of fire-protection cabinets to ensure that type and capacity of fire extinguishers indicated are accommodated.

B. Coordinate sizes and locations of fire-protection cabinets with wall depths.

PART 2 - PRODUCTS

2.1 MANUFACTURERS

A. Source Limitations: Obtain fire-protection cabinets, accessories, and fire extinguishers from single source from single manufacturer.

2.2 FIRE-PROTECTION CABINET

A. Cabinet Type: Suitable for fire extinguisher .

1. Manufacturers: Subject to compliance with requirements, provide products by one of the following:
   a. Babcock-Davis.
   b. Guardian Fire Equipment, Inc.
   c. J. L. Industries, Inc.; Activar Construction Products Group, Inc.

B. Cabinet Construction: Nonrated .

1. Fire-Rated Cabinets: Construct fire-rated cabinets with double walls fabricated from 0.043-inch- thick cold-rolled steel sheet lined with minimum 5/8-inch- thick fire-barrier material. Provide factory-drilled mounting holes.

C. Cabinet Material: Aluminum sheet Stainless steel sheet.

1. Shelf: Same metal and finish as cabinet.

D. Recessed Cabinet:

1. Trimless with Hidden Flange: Flange of same metal and finish as box overlaps surrounding wall finish and is concealed from view by an overlapping door.

E. Cabinet Trim Material: Same material and finish as door.

F. Door Material: Aluminum sheet Extruded-aluminum shapes Stainless steel sheetas selected by architect .

G. Door Style: Center glass panel with frame .

H. Door Glazing: Tempered float glass (clear) .

1. Acrylic Bubble Color: Clear , transparent.

I. Door Hardware: Manufacturer's standard door-operating hardware of proper type for cabinet type, trim style, and door material and style indicated.

1. Provide recessed door pull and friction latch .
2. Provide manufacturer's standard hinge, permitting door to open 180 degrees.

J. Materials:

1. Aluminum: ASTM B221 for extruded shapes and aluminum sheet, with strength and durability characteristics of not less than Alloy 6063-T5 for aluminum sheet.
   a. Finish: Baked enamel or powder coat.
   b. Color: As selected by Architect from full range of industry colors and color densities .
2. Stainless Steel: ASTM A240/A240M or ASTM A666, Type 304.
3. Tempered Float Glass: ASTM C1048, Kind FT, Condition A, Type I, Quality q3, 3 mm thick, Class 1 (clear) .

2.3 FABRICATION

A. Fire-Protection Cabinets: Provide manufacturer's standard box (tub) with trim, frame, door, and hardware to suit cabinet type, trim style, and door style indicated.

1. Weld joints and grind smooth.
2. Miter corners and grind smooth.
3. Provide factory-drilled mounting holes.
4. Prepare doors and frames to receive locks.
5. Install door locks at factory.

B. Cabinet Doors: Fabricate doors according to manufacturer's standards, from materials indicated and coordinated with cabinet types and trim styles.

1. Fabricate door frames with tubular stiles and rails and hollow-metal design, minimum 1/2 inch thick.
2. Fabricate door frames of one-piece construction with edges flanged.
3. Miter and weld perimeter door frames and grind smooth.

C. Cabinet Trim: Fabricate cabinet trim in one piece with corners mitered, welded, and ground smooth.

2.4 GENERAL FINISH REQUIREMENTS

A. Comply with NAAMM's AMP 500, "Metal Finishes Manual for Architectural and Metal Products," for recommendations for applying and designating finishes.

B. Protect mechanical finishes on exposed surfaces of fire-protection cabinets from damage by applying a strippable, temporary protective covering before shipping.

C. Finish fire-protection cabinets after assembly.

D. Appearance of Finished Work: Noticeable variations in same piece are unacceptable. Variations in appearance of adjoining components are acceptable if they are within the range of approved Samples and are assembled or installed to minimize contrast.

PART 3 - EXECUTION

3.1 EXAMINATION

A. Examine walls and partitions for suitable framing depth and blocking where recessed semirecessed cabinets will be installed.

B. Proceed with installation only after unsatisfactory conditions have been corrected.

3.2 PREPARATION

A. Prepare recesses for recessed fire-protection cabinets as required by type and size of cabinet and trim style.

3.3 INSTALLATION

A. General: Install fire-protection cabinets in locations and at mounting heights indicated or, if not indicated, at height indicated below: or, if not indicated, at heights acceptable to authorities having jurisdiction.

1. Fire-Protection Cabinet Mounting Height: 42 inches above finished floor to top of fire extinguisher.

B. Fire-Protection Cabinets: Fasten cabinets to structure, square and plumb.

1. Unless otherwise indicated, provide recessed fire-protection cabinets. If wall thickness is inadequate for recessed cabinets, provide semirecessed fire-protection cabinets.
2. Provide inside latch and lock for break-glass panels.
3. Fasten mounting brackets to inside surface of fire-protection cabinets, square and plumb.

C. Identification:

1. Apply vinyl lettering at locations indicated.
2. Apply vinyl lettering on field-painted fire-protection cabinets after painting is complete.

3.4 ADJUSTING AND CLEANING

A. Remove temporary protective coverings and strippable films, if any, as fire-protection cabinets are installed unless otherwise indicated in manufacturer's written installation instructions.

B. Adjust fire-protection cabinet doors to operate easily without binding. Verify that integral locking devices operate properly.

C. On completion of fire-protection cabinet installation, clean interior and exterior surfaces as recommended by manufacturer.

D. Touch up marred finishes, or replace fire-protection cabinets that cannot be restored to factory-finished appearance. Use only materials and procedures recommended or furnished by fire-protection cabinet and mounting bracket manufacturers.

E. Replace fire-protection cabinets that have been damaged or have deteriorated beyond successful repair by finish touchup or similar minor repair procedures.

END OF SECTION 10 4413

SECTION 10 4416 - FIRE EXTINGUISHERS

PART 1 - GENERAL

1.1 SUMMARY

A. Section includes portable, hand-carried fire extinguishers.

1.2 ACTION SUBMITTALS

A. Product Data: For each type of product. Include rating and classification, material descriptions, dimensions of individual components and profiles, and finishes for fire extinguisher.

1.3 CLOSEOUT SUBMITTALS

A. Operation and Maintenance Data: For fire extinguishers to include in maintenance manuals.

1.4 COORDINATION

A. Coordinate type and capacity of fire extinguishers with fire-protection cabinets to ensure fit and function.

1.5 WARRANTY

A. Special Warranty: Manufacturer's standard form in which manufacturer agrees to repair or replace fire extinguishers that fail in materials or workmanship within specified warranty period.

1. Failures include, but are not limited to, the following:
    a. Failure of hydrostatic test according to NFPA 10 when testing interval required by NFPA 10 is within the warranty period.
    b. Faulty operation of valves or release levers.
2. Warranty Period: Six years from date of Substantial Completion.

PART 2 - PRODUCTS

2.1 PERFORMANCE REQUIREMENTS

A. NFPA Compliance: Fabricate and label fire extinguishers to comply with NFPA 10, "Portable Fire Extinguishers."

B. Fire Extinguishers: Listed and labeled for type, rating, and classification by an independent testing agency acceptable to authorities having jurisdiction.

1. Provide fire extinguishers approved, listed, and labeled by FM Global.

2.2 PORTABLE, HAND-CARRIED FIRE EXTINGUISHERS

A. Fire Extinguishers: Type, size, and capacity for each indicated.

1. Manufacturers: Subject to compliance with requirements, provide products by one of the following:
   a. Babcock-Davis.
   b. J. L. Industries, Inc.; Activar Construction Products Group, Inc.
   c. Kidde; Carrier Global Corporation.
   d. Larsen's Manufacturing Company.
2. Source Limitations: Obtain fire extinguishers, fire-protection cabinets, and accessories, from single source from single manufacturer.
3. Instruction Labels: Include pictorial marking system complying with NFPA 10, Appendix B.

B. Multipurpose Dry-Chemical Type : UL-rated nominal capacity, with monoammonium phosphate-based dry chemical in manufacturer's standard enameled container.

PART 3 - EXECUTION

3.1 EXAMINATION

A. Examine fire extinguishers for proper charging and tagging.

1. Remove and replace damaged, defective, or undercharged fire extinguishers.

B. Proceed with installation only after unsatisfactory conditions have been corrected.

3.2 INSTALLATION

A. General: Install fire extinguishers in locations indicated and in compliance with requirements of authorities having jurisdiction.

END OF SECTION 10 4416

SECTION 12 2413 - ROLLER WINDOW SHADES

PART 1 - GENERAL

1.1 RELATED DOCUMENTS

A. Drawings and general provisions of the Contract, including General and Supplementary Conditions and Division 01 Specification Sections, apply to this Section.

B. Section Includes:

1. Manually operated Light Blocking roller shades.

C. Related Requirements:

1. Section 06 1000 "Rough Carpentry" for wood blocking and grounds for mounting roller shades and accessories.
2. Section 09 2900 “Gypsum board" for blocking for mounting roller shades and accessories.

1.2 ACTION SUBMITTALS

A. Product Data: For each type of product.

1. Include styles, material descriptions, construction details, dimensions of individual components and profiles, features, finishes, and operating instructions for roller shades.

B. Shop Drawings: Show fabrication and installation details for roller shades, including shadeband materials, their orientation to rollers, and their seam and batten locations.

C. Samples for Verification: For each type of roller shade.

1. Shadeband Material: Not less than 3 inches square. Mark inside face of material if applicable.

D. Roller-Shade Schedule: Use same designations indicated on Drawings.

1.3 INFORMATIONAL SUBMITTALS

A. Qualification Data: For Installer.

B. Product Certificates: For each type of shadeband material, signed by product manufacturer.

C. Product Test Reports: For each type of shadeband material, for tests performed by manufacturer and witnessed by a qualified testing agency.

1.4 CLOSEOUT SUBMITTALS

A. Maintenance Data: For roller shades to include in maintenance manuals.

1.5 QUALITY ASSURANCE

A. Installer Qualifications: Fabricator of products.

B. Mockups: Build mockups to verify selections made under Sample submittals, to demonstrate aesthetic effects, and to set quality standards for materials and execution.

1. Approval of mockups does not constitute approval of deviations from the Contract Documents contained in mockups unless Architect specifically approves such deviations in writing.

1.6 DELIVERY, STORAGE, AND HANDLING

A. Deliver roller shades in factory packages, marked with manufacturer, product name, and location of installation using same designations indicated on Drawings.

1.7 FIELD CONDITIONS

A. Environmental Limitations: Do not install roller shades until construction and finish work in spaces, including painting, is complete and dry and ambient temperature and humidity conditions are maintained at the levels indicated for Project when occupied for its intended use.

B. Field Measurements: Where roller shades are indicated to fit to other construction, verify dimensions of other construction by field measurements before fabrication and indicate measurements on Shop Drawings. Allow clearances for operating hardware of operable glazed units through entire operating range. Notify Architect of installation conditions that vary from Drawings. Coordinate fabrication schedule with construction progress to avoid delaying the Work.

PART 2 - PRODUCTS

2.1 MANUFACTURERS

A. Basis-of-Design Product: Subject to compliance with requirements, provide product indicated on the Finish Legend in the Drawings or comparable product by one of the following:

1. BTX Window Automation, Inc.
2. DFB Sales.
3. Draper Inc.
4. Hunter Douglas Contract.
5. Lutek Shading Systems.

6. Lutron Electronics Co., Inc.
7. MechoShade Systems, Inc.
8. Nysan Solar Control Inc.; Hunter Douglas Company.
9. OEM Shades Inc.
10. Shade Techniques, LLC.
11. Silent Gliss USA, Inc.
12. SM Automatic, Inc.
13. Preapproved equal.

B. Source Limitations: Obtain roller shades from single source from single manufacturer.

2.2 MANUALLY OPERATED SHADES WITH SINGLE ROLLERS

A. Basis-of-Design product: Subject to compliance with requirements, provide products listed in the Material Schedule on the Drawings as manufactured by Blindsgalore or equal.

B. Requests for substitutions will be considered in accordance with provisions 01 60 00 – Product Requirements

C. Chain-and-Clutch Operating Mechanisms: With continuous-loop bead chain and clutch that stops shade movement when bead chain is released; permanently adjusted and lubricated.

1. Bead Chains: Manufacturer's standard Nickel-plated metal Stainless steel Plastic Insert description.

    a. Loop Length: Full length of roller shade.
    b. Limit Stops: Provide upper and lower ball stops.
    c. Chain-Retainer Type: Clip, jamb mount Chain tensioner.

D. Rollers: Corrosion-resistant steel or extruded-aluminum tubes of diameters and wall thicknesses required to accommodate operating mechanisms and weights and widths of shadebands indicated without deflection. Provide with permanently lubricated drive-end assemblies and idle-end assemblies designed to facilitate removal of shadebands for service.

1. Roller Drive-End Location: as indicated on drawings.
2. Direction of Shadeband Roll: as indicated on drawings
3. Shadeband-to-Roller Attachment: Manufacturer's standard method Adhesive strip Removable spline fitting into integral channel in tube Insert description.

E. Mounting Hardware: Brackets or endcaps, corrosion resistant and compatible with roller assembly, operating mechanism, installation accessories, and mounting location and conditions indicated.

F. Roller-Coupling Assemblies: Coordinated with operating mechanism and designed to join up to three inline rollers into a multiband shade that is operated by one roller drive-end assembly.

G. Shadebands:

1. Shadeband Material: Custom graphic color background exterior and blackout- white interior.

2. Shadeband Graphic: Custom color graphic logo to be coordinated with owner as indicated on drawings.
3. Shadeband Bottom (Hem) Bar: Manufacturer's standard.

    a. Color and Finish: As selected by Architect from manufacturer's full range Insert color and finish.

H. .

2.3 SHADEBAND MATERIALS

A. Shadeband Material Flame-Resistance Rating: Comply with NFPA 701. Testing by a qualified testing agency. Identify products with appropriate markings of applicable testing agency.

B. Light-Blocking Fabric: Woven fabric, stain and fade resistant.

1. Source: Roller-shade manufacturer.
2. Type: 100% polyester with EVA material backing.
3. Roll Width: Maximum available by manufacturer, but not less than 84 inches or width of opening.

4. Color: As indicated on drawings.

2.4 ROLLER-SHADE FABRICATION

A. Product Safety Standard: Fabricate roller shades to comply with WCMA A 100.1, including requirements for flexible, chain-loop devices; lead content of components; and warning labels.

B. Unit Sizes: Fabricate units in sizes to fill window and other openings as follows, measured at 74 deg F:

PART 3 - EXECUTION

3.1 EXAMINATION

A. Examine substrates, areas, and conditions, with Installer present, for compliance with requirements for installation tolerances, operational clearances, and other conditions affecting performance of the Work.

B. Proceed with installation only after unsatisfactory conditions have been corrected.

3.2 ROLLER-SHADE INSTALLATION

A. Install roller shades level, plumb, and aligned with adjacent units according to manufacturer's written instructions.

3.3 ADJUSTING

A. Adjust and balance roller shades to operate smoothly, easily, safely, and free from binding or malfunction throughout entire operational range.

3.4 CLEANING AND PROTECTION

A. Clean roller-shade surfaces after installation, according to manufacturer's written instructions.

B. Provide final protection and maintain conditions, in a manner acceptable to manufacturer and Installer, that ensure that roller shades are without damage or deterioration at time of Substantial Completion.

C. Replace damaged roller shades that cannot be repaired, in a manner approved by Architect, before time of Substantial Completion.

END OF SECTION 12 2413

LGCI
Lahlaf Geotechnical Consulting, Inc.

November 28, 2022

Ms. Michelle Clay
Project Specification Manager
Roger Williams Park Zoo
1000 Elmwood Avenue
Providence, RI 02907
Phone: (401) 785-3510 ext. 504
Mobile: (401) 473-4155
E-mail: mclay@rwpzoo.org

Re: **Geotechnical Report**
Proposed Red Panda Exhibit – Roger Williams Park Zoo
Providence, Rhode Island
LGCI Project No. 2251

Dear Ms. Clay:

Lahlaf Geotechnical Consulting, Inc. (LGCI) has completed a geotechnical study for the proposed Red Panda Exhibit at Roger Williams Park Zoo in Providence, Rhode Island. We are submitting our geotechnical report electronically. Please notify us if you need a hard copy.

The soil samples from our explorations are currently stored at LGCI for further analysis, if requested. Unless notified otherwise, we will dispose of the soil samples after three (3) months.

Thank you for choosing LGCI as your geotechnical engineer.

Very truly yours,

Lahlaf Geotechnical Consulting, Inc.



Abdelmadjid M. Lahlaf, Ph.D., P.E.
Principal Engineer

LGCI
Lahlaf Geotechnical Consulting, Inc.

GEOTECHNICAL REPORT
PROPOSED RED PANDA EXHIBIT – ROGER WILLIAMS PARK ZOO
PROVIDENCE, RHODE ISLAND

LGCI Project No. 2251
November 28, 2022

Prepared for:

Roger Williams Park Zoo
1000 Elmwood Avenue
Providence, RI 02907
Phone: (401) 785-3510 ext. 504
Mobile: (401) 473-4155

GEOTECHNICAL REPORT
PROPOSED RED PANDA EXHIBIT – ROGER WILLIAMS PARK ZOO
PROVIDENCE, RHODE ISLAND
LGCI Project No. 2251
November 22, 2022

Prepared for:

Roger Williams Park Zoo
1000 Elmwood Avenue
Providence, RI 02907
Phone: (401) 785-3510 ext. 504
Mobile: (401) 473-4155

Prepared by:

LAHLAF GEOTECHNICAL CONSULTING, INC.
100 Chelmsford Road, Suite 2
Billerica, Massachusetts 01862
Phone: (978) 330-5912
Fax: (978) 330-5056

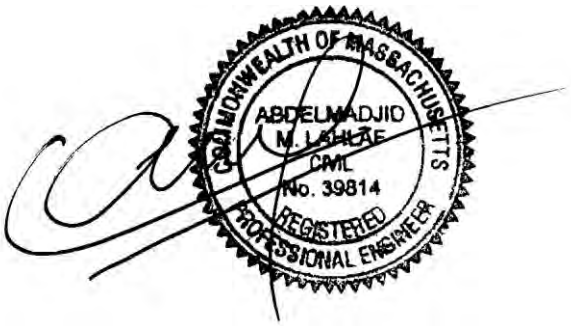

Abdelmadjid M. Lahlaf, Ph.D., P.E.
Principal Engineer

TABLE OF CONTENTS

1. PROJECT INFORMATION 2

1.1 PROJECT AUTHORIZATION 2
1.2 PURPOSE AND SCOPE OF SERVICES 2
1.3 SITE DESCRIPTION 2
1.4 PROJECT DESCRIPTION 2
1.5 ELEVATION DATUM 3

2. SITE AND SUBSURFACE CONDITIONS 4

2.1 SURFICIAL GEOLOGY 4
2.2 LGCI'S EXPLORATIONS 4
2.2.1 General 4
2.2.2 LGCI's Soil Borings 4
2.2.3 Exploration Logs and Locations 4
2.3 SUBSURFACE CONDITIONS 5
2.4 GROUNDWATER 6
2.5 LABORATORY TEST DATA 6

3. EVALUATION AND RECOMMENDATIONS 7

3.1 GENERAL 7
3.1.1 Surficial Topsoil, Existing Fill, and Buried Organic Soil 7
3.2 HELICAL PIERS 8
3.2.1 General 8
3.2.2 Helical Pier Design 8
3.2.3 Helical Pier Load Tests 9
3.2.4 Settlement Estimates 9
3.3 CONCRETE SLAB CONSIDERATIONS 9
3.3.1 Structural Slab 9
3.3.2 Under-slab Drains and Waterproofing 9
3.4 SEISMIC DESIGN 9
3.5 LATERAL PRESSURES FOR WALL DESIGN 10
3.6 PARKING LOTS, DRIVEWAYS, AND SIDEWALKS 10
3.6.1 General 10
3.6.2 Sidewalks 10
3.6.3 Pavement Sections 10
3.7 UNDERGROUND UTILITIES 11

4. CONSTRUCTION CONSIDERATIONS 12

4.1 SUBGRADE PREPARATION 12
4.2 SUBGRADE PROTECTION 13
4.3 FILL MATERIALS 13
4.3.1 Structural Fill 13
4.3.2 Ordinary Fill 14
4.4 REUSE OF ONSITE MATERIALS 14
4.5 GROUNDWATER CONTROL PROCEDURES 15
4.6 TEMPORARY EXCAVATIONS 15

5. RECOMMENDATIONS FOR FUTURE WORK 16

6. REPORT LIMITATIONS 17

7. REFERENCES 18

List of Tables and Figures

Table 1	Summary of LGCI's Borings
Figure 1	Site Location Map
Figure 2	Surficial Geologic Map
Figure 3	Boring Location Plan

List of Appendices

Appendix A	LGCI's Boring Logs
Appendix B	Laboratory Test Results

1. PROJECT INFORMATION

1.1 Project Authorization

This geotechnical report presents the results of the subsurface explorations and a geotechnical evaluation performed by Lahlaf Geotechnical Consulting, Inc. (LGCI) for the proposed Red Panda Exhibit at Roger Williams Park Zoo in Providence, Rhode Island. We performed our services in general accordance with our proposal No. 22116 dated September 19, 2022. Mr. Ron Patalano of Roger Williams Park Zoo authorized our services by signing our proposal on November 9, 2022.

1.2 Purpose and Scope of Services

The purpose of our geotechnical services was to perform subsurface explorations at the site for the proposed Red Panda Exhibit at Roger Williams Park Zoo, and to provide foundation design and construction recommendations. LGCI performed the following services:

- Coordinated our exploration locations with Roger Williams Park Zoo (RWPZ).
- Marked the exploration locations at the site and notified Dig Safe Systems Inc. (Dig Safe) and the City of Providence for utility clearance.
- Engaged a drilling subcontractor for one (1) day to advance three (3) soil borings at the site.
- Provided an LGCI geotechnical engineer at the site to coordinate and observe the borings, describe the soil samples, and prepare field logs.
- Submitted two (2) soil samples from the borings for grain-size analysis.
- Submitted two (2) soil samples from the buried organic soil for organic content testing.
- Prepared this geotechnical report containing the results of our subsurface explorations and our recommendations for foundation design and construction.

Our scope does not include preparing specifications, reviewing contract documents, attending meetings, or providing construction services. LGCI would be pleased to perform these services when needed. Recommendations for unsupported slopes, stormwater management, erosion control, pavement design, slope stability analyses, liquefaction and/or site-specific seismic analysis, pile analysis and design, and detailed cost or quantity estimates are not included in our scope of work.

LGCI's scope of services does not include an environmental assessment for the presence or absence of wetlands or analytical testing for hazardous or toxic materials in the soil, surface water, groundwater, or air, on or below or around this site, or mold in the soil or in any structure



at the site. Any statements regarding odors, colors, or unusual or suspicious items or conditions are strictly for the information of the client.

1.3 Site Description

Our understanding of the site is based on our field observations, our discussions with RWPZ, and on the following document:

- Drawing titled: "Existing Condition Site For The Red Panda Exhibit At Roger Williams Zoo Situated On 1000 Elmwood Avenue, Providence, Rhode Island," (Existing Conditions Plan) prepared by Garofalo & Associates, Inc., dated October 19, 2022, and provided to LGCI by RWPZ via email on October 19, 2022.

The site is located within the Roger Williams Park Zoo located at 1000 Elmwood Avenue in Providence, Rhode Island as shown in Figure 1. The site is located on the western side of Polo Lake near the existing red panda and red crowned crane exhibits. The site is bordered by Elmwood Avenue on the northern and western sides, by Polo Lake on the eastern side, and by Green Memorial Boulevard.

Based on the Existing Conditions Plan, the grades at the site generally range from El. 31 feet near the eastern edge of the site and El. 49 feet near the western edge of the site. The existing grades within the general area of the proposed red panda exhibit range between El. 32 feet and El. 34 feet.

1.4 Project Description

Our understanding of the proposed construction is based on our discussions with RWPZ, the document listed in Section 1.3, and the following documents:

- Drawing A1.00 titled: "Proposed Foundation / Grade Framing Plan, Red Panda Exhibit, Roger Williams Park Zoo," (Foundation Plan) prepared by LDL Studio, Inc. (LDL), undated, and provided to LGCI by LDL via e-mail on August 31, 2022.

- Drawing A1.01 titled: "Proposed Ground Floor, Red Panda Exhibit, Roger Williams Park Zoo," (Ground Floor Plan) prepared by LDL, undated, and provided to LGCI by LDL via e-mail on August 31, 2022.

- PowerPoint presentation titled: "Red Panda Final Concept Presentation," (Concept Presentation) prepared by LDL, dated May 20, 2022, and provided to LGCI by LDL via e-mail on August 31, 2022.

Based on the Foundation Plan, the Ground Floor Plan, and the Concept Presentation, we understand that RWPZ plans to construct improvements on the western side of Polo Lake. We understand that the proposed improvements will include an exhibit for the red panda west of the southern launch point of the existing zip line. We understand that the proposed exhibit will be two stories high and will have a gross area of about 1,000 square feet. We understand that the



proposed exhibit will have a first finished floor elevation (FFE) similar to the existing grades at the site, requiring minor cuts and fills to achieve the proposed grade.

We understand that the proposed building will be located near an existing retaining wall.

1.5 Elevation Datum

We understand that the elevations provided in the Existing Conditions Plan are referenced with respect to the North American Vertical Datum of 1988 (NAVD 1988).

2. SITE AND SUBSURFACE CONDITIONS

2.1 Surficial Geology

LGCI reviewed the surficial geological map titled "Surficial Geology of the Providence Quadrangle, Rhode Island" prepared by J. Hiram Smith and published by the USGS in 1956.

The surficial geological map of the site indicates that the natural soils in the general vicinity of the site consist of outwash plain deposits which are comprised of broad, flat deposits of sand and gravel.

The Surficial Geologic Map is shown in Figure 2.

2.2 LGCI's Explorations

2.2.1 General

LGCI coordinated our exploration locations with RWPZ and marked the exploration locations in the field. LGCI notified Dig Safe and the City of Providence for utility clearance prior to starting our explorations at the site.

Unless notified otherwise, we will dispose of the soil samples obtained during our explorations after three (3) months.

2.2.2 LGCI's Soil Borings

LGCI engaged Northern Drilling Services, Inc. (NDS) of Northborough, Massachusetts to advance three (3) soil borings (B-1 to B-3) at the site on November 4, 2022. The borings were advanced with a Diedrich D-25 ATV Drill Rig using drive and wash boring techniques with 4-inch casings. The borings extended to depths ranging between 8 and 41 feet beneath the ground surface. Upon completion, the boreholes were backfilled with soil cuttings and gravel.

NDS performed Standard Penetration Tests (SPT) and obtained split spoon samples with an automatic hammer at typical depth intervals of 2 feet or 5 feet as noted on the boring logs in general accordance with ASTM D-1586.

An LGCI geotechnical engineer observed and logged the borings in the field.

2.2.3 Exploration Logs and Locations

The boring locations are shown in Figure 3. Appendix A contains LGCI's boring logs and Table 1 includes a summary of LGCI's borings.



2.3 Subsurface Conditions

The subsurface description in this report is based on a limited number of explorations and is intended to highlight the major soil strata encountered during our explorations. The subsurface conditions are known only at the actual exploration locations. Variations may occur and should be expected between exploration locations. The boring logs represent conditions that we observed at the time of our explorations and were edited, as appropriate, based on the results of the laboratory test data and inspection of the soil samples in the laboratory. The strata boundaries shown in our boring logs are based on our interpretations and the actual transitions may be gradual. Graphic soil symbols are for illustration only.

The soil strata encountered in LGCI's borings were as follows, starting at the ground surface.

Topsoil – A layer of surficial organic topsoil was encountered at the ground surface in all borings. The thickness of the topsoil ranged between 0.9 feet and 2 feet beneath the ground surface.

Fill – A layer of fill was encountered beneath the topsoil or buried organic soil (described below) in borings B-1 and B-3. The fill extended to a depth of 8 feet beneath the ground surface in boring B-1, and to the termination depth of boring B-3 at a depth of 8 feet beneath the ground surface. Boring B-3 was terminated due to time constraints. It is not known how deep the fill is at boring B-3. The samples within this layer were described as silty sand and poorly graded sand. The fines content in the fill ranged between 10 and 20 percent, and the gravel content ranged between 5 and 15 percent. The fill contained traces of organic soil.

The SPT N-values in this layer ranged between 6 blows per foot (bpf) and 16 bpf, indicating loose to medium dense material.

Buried Organic Soil – A layer of buried organic soil was encountered beneath the topsoil in boring B-2 and extended to a depth of 7.2 feet beneath the ground surface. Buried organic soil was also encountered within or at the bottom of the fill layer. The samples in this layer were mostly described as silty sand. One (1) sample was described as poorly graded sand. The fines content in the buried organic soil ranged between 10 and 30 percent, and the gravel content ranged between 5 and 10 percent. The buried organic soil contained traces of organic soil, roots, and peat fibers.

The SPT N-values in this layer ranged between 2 bpf and 9 bpf, indicating very loose to loose material.

Sand – A layer of sand was encountered beneath the layer of fill or buried organic soil in borings B-1 and B-2 and extended to the termination depths of borings B-1 and B-2 at depths of 41 and 31 feet beneath the ground surface, respectively. The samples in this layer were mostly described as silty sand, well graded sand, and silt. One (1) sample was described as poorly graded sand. The fines content in this layer ranged between 10 and 30 percent, and the gravel content ranged



between 0 and 25 percent. When described as silt, the sand content in this layer ranged between 10 and 35 percent. The silt was described as non-plastic to slightly plastic.

The SPT N-values in this layer ranged between 10 bpf and 36 bpf, with most values ranging between 11 bpf and 17 bpf, indicating medium dense material.

2.4 Groundwater

Groundwater was encountered in all borings at depths ranging between 4.0 and 6.2 feet beneath the ground surface, as shown in Table 1 and in the boring logs.

The groundwater information reported herein is based on observations made during or shortly after the completion of drilling. In addition, the drilling procedure introduced water into the boreholes during drilling. Therefore, the reported groundwater levels may not represent the actual groundwater conditions, as additional time may be required for the groundwater levels to stabilize. The groundwater information presented in this report only represents the conditions encountered at the time and location of the explorations. Seasonal fluctuation should be anticipated.

2.5 Laboratory Test Data

LGCI submitted two (2) soil samples collected from the borings for grain-size analysis. The results of the grain-size analyses are provided in the test data sheets included in Appendix B and are summarized in the table below.

Grain-Size Analysis Test Results

Boring No.	Sample No.	Stratum	Sample Depth (ft.)	Percent Gravel	Percent Sand	Percent Fines
B-2	S3 Top 6”	Buried Organics	4.0 – 6.0	5.4	82.9	11.7
B-3	S1 Bot. 7”	Fill	0.0 – 2.0	14.3	68.0	17.7

The results of organic content tests will be submitted separately.



3. EVALUATION AND RECOMMENDATIONS

3.1 General

Based on our understanding of the proposed construction, our observation of our borings, and the results of our laboratory testing, there are a few issues that we would like to highlight for consideration and discussion.

3.1.1 Surficial Topsoil, Existing Fill, and Buried Organic Soil

- Surficial topsoil, existing fill, and buried organic soil were encountered in the borings. These materials are not suitable to support foundations.

- The topsoil should be entirely removed from within the entire construction area, including the proposed building footprint and proposed driveways and parking lots.

- The existing fill was observed to be variable in composition and density. In addition, variable amounts of organic matter and layers of buried organic soil were observed in the fill layer. Existing fill that was not placed with strict moisture, density, and gradation control presents risk of unpredictable settlement that may result in poor performance of floor slabs and foundations. Due to these risks, we considered the option of removing the existing fill and the buried organic soil from within the proposed building footprint and replacing it with Structural Fill ("remove and replace" option). However, due to the proximity of the existing retaining wall and the presence of relatively shallow groundwater, we believe that the "remove and replace" option is not feasible as it will require a support of excavation system to support the existing retaining wall and will require significant groundwater control. Accordingly, we recommend supporting the proposed building on helical piers deriving their capacity in the sand layer.

- Within paved areas, the existing fill and the buried organic soil should be removed to the top of the natural sand or to a depth of 24 inches beneath the bottom of the proposed pavement. Where existing fill or buried organic soil are exposed, the existing fill or buried organic soil deeper than 24 inches beneath the bottom of the proposed pavement can remain in place provided these materials are firm and unyielding following proofrolling as described in Section 4.1.

- Our recommendations for helical piers are presented in Sections 3.2.1 and 3.2.2. Our estimates for settlement are presented in Section 3.2.4. Our concrete slab considerations are presented in Section 3.3. Section 4.1 provides recommendations for preparation of subgrades.



3.2 Helical Piers

3.2.1 General

Helical piers are proprietary and are designed by the manufacturer/installer. The helical pier designer should estimate the helical pier resistance that could be achieved based on the available subsurface data. The helical piers should be designed by a professional engineer registered in the Commonwealth of Massachusetts and engaged by the contractor. The design should include the size and depth of the helical piers, and the configuration of the helical piers beneath the pile caps based on structural loads provided by the project structural engineer.

3.2.2 Helical Pier Design

Below are general recommendations for helical piers.

- Helical piers are susceptible to corrosion. The designer may consider using a pierwith an increased wall thickness to allow for loss of material due to corrosion or designing a corrosion protection system.

- Helical piers are susceptible to obstructions. If helical piers are used, the existing fill will need to be, to the extent possible, pre-trenched for obstructions; and provisions should be made in the design to allow for field changes to the pier locations in the event of obstructions in the natural sand ayer.

- The helical piers should be designed to have their helices embedded in the natural sand layer.

- The designer is cautioned that the natural sand ayer contains coarse gravel. When coarse gravel particles become lodged between the helices, they smear the soil as the helical piers are spun into the ground and lower the soil resistance. Therefore, as the helical piers are spun, the torque should be monitored to stop advancing the helical piers as soon as the required torque is reached.

- The designer should check for buckling in the existing fill and buried organic soil of the helical piers under the axial loads.

- The helical piers should be installed at a spacing larger than 3 pierdiameters on center.

- Helical pier pier caps should be placed at a minimum depth of 3 feet 4 inches beneath the ground surface to provide adequate frost protection.



3.2.3 Helical Pier Load Tests

We recommend performing at least one (1) load test on a helical pier. The location of the test pier should be coordinated with LGCI.

3.2.4 Settlement Estimates

The helical piles should be designed to reduce the total settlement to less than 1 inch and the differential settlement to less than 3.4-inch over a distance of 25 feet. We believe that total and differential settlements of this magnitude are tolerable for a similar structure. However, the tolerance of the proposed structure to the predicted total and differential settlements should be assessed by the structural engineer. Tighter settlement limits should be considered based on the tolerance of the proposed building to settlement recommended by the project structural engineer.

3.3 Concrete Slab Considerations

3.3.1 Structural Slab

- The proposed slab should be supported on helical piers.

- The design of the proposed slab should be coordinated with the designer of the helical piers to make sure that the proposed slab thickness and reinforcing are designed to span between helical piers.

3.3.2 Under-slab Drains and Waterproofing

Based on the groundwater level observed in the borings, we believe that an under-slab drainage system is not required.

3.4 Seismic Design

Based on the SPT N-values from the borings, we estimate that the seismic criteria for the site are as follows:

- Site Class: D
- Spectral Response Acceleration at short period (Ss): 0.176g
- Spectral Response Acceleration at 1 sec. (S_1): 0.062g
- Site Coefficient Fa (Table 1613.5.3(1)): 1.6
- Site Coefficient Fv (Table 1613.5.3(2): 2.4
- Adjusted spectral response S_{MS}: 0.282g
- Adjusted spectral response S_{M1}: 0.149g

Based on the SPT data from the borings, the site soils are not susceptible to liquefaction.



3.5 Lateral Pressures for Wall Design

We understand that the proposed building will not have below-ground spaces and will not have perimeter walls retaining soil. Accordingly, we have not provided recommendation for lateral earth pressures.

3.6 Parking Lots, Driveways, and Sidewalks

3.6.1 General

The subsurface conditions encountered at the site are generally suitable to support the proposed driveways, parking lots, and sidewalks after preparation of the subgrade as described in Section 4.1.

- We recommend entirely removing the topsoil from within the footprint of the proposed driveways and parking lots.

- The existing fill and buried organic soil should be improved in accordance with the recommendations in Section 4.1.

- Cobbles and boulders should be removed to at least 18 inches below the bottom of the pavement.

3.6.2 Sidewalks

- Sidewalks should be placed on a minimum of 12 inches of Structural Fill with less than 5 percent fines.

- To reduce the potential for heave caused by surface water penetrating under the sidewalk, the joints between sidewalk concrete sections should be sealed with a waterproof compound. The sidewalks should be sloped away from the building or other vertical surfaces to promote flow of water. To the extent possible, roof leaders should not discharge onto sidewalk surfaces.

3.6.3 Pavement Sections

A typical, minimum, standard-duty pavement section that could be used for parking areas is as follows:

1.5" Asphalt "Top Course"
2.0" Asphalt "Base Course"
8" Aggregate Base (Gravel Borrow, RIDOT M.01.09; Table 1, Column 1)



A typical, minimum, heavy-duty pavement section that could be used for areas of heavy truck traffic is as follows:

2.0" Asphalt "Top Course"
2.5" Asphalt "Base Course"
12" Aggregate Base (Gravel Borrow, RIDOT M.01.09; Table 1, Column 1)

The pavement sections shown above represent minimum thicknesses representative of typical local construction practices for similar use. Periodic maintenance should be anticipated.

Pavement material types and construction procedures should conform to specifications of the Rhode Island Department of Transportation, Standard Specifications for Road and Bridge Construction, 2004 Edition.

Areas to receive relatively highly concentrated, sustained loads such as dumpsters, loading areas, and storage bins are typically installed over a rigid pavement section to distribute concentrated loads and reduce the possibility of high stress concentrations on the subgrade. Typical rigid pavement sections consist of 6 inches of concrete placed over a minimum of 12 inches of subbase material.

3.7 Underground Utilities

Boulders at the bottom of utility trenches should be removed to at least 12 inches below the pipe invert and the resulting excavation should be backfilled with suitable backfill. Utilities should be placed on suitable bedding material in accordance with the manufacturer's recommendations. "Cushion" material should be placed, by hand, above the utility pipe in maximum 6-inch lifts. The lift should be compacted by hand to avoid damage to the utility. Where the bedding/cushion material consists of crushed stone, it should be wrapped in a geotextile fabric.

Compaction of fill in utility trenches should be in accordance with our recommendations in Section 4.3. To reduce the potential for damage to utilities, placement and compaction of fill immediately above the utilities should be performed in accordance with the manufacturer's recommendations.



4. CONSTRUCTION CONSIDERATIONS

4.1 Subgrade Preparation

- Tree stumps, root balls, and roots larger than ½ inch in diameter should be removed and the cavities filled with suitable material and compacted per Section 4.3 of this report.

- Topsoil, root balls, and other deleterious material should be entirely removed from within the paved areas.

- Cobbles and boulders should be removed from the existing fill using pre-trenching before the start of helical pier installation.

- Should cobbles and boulders be encountered at or near the ground surface, the cobbles and boulders should be removed, and the resulting excavation should be backfilled with compacted Structural Fill under the proposed building and with Ordinary Fill in paved areas. The design of the footings/pile caps and slab should be able to accommodate slight relocation of the helical piers due to obstructions. Where relocation is not possible, the site contractor should be prepared to remove the obstruction.

- Due to the high susceptibility of the natural soil for disturbance under foot and vehicular traffic, we recommend placing a minimum of 6 inches of Structural Fill at the bottom of the pile cap excavations or 4 inches of lean concrete to serve as a working mat.

- Fill placed within the footprint of the proposed building should meet the gradation and compaction requirements of Structural Fill shown in Section 4.3.1.

- Fill placed under the subbase of paved areas should meet the gradation and compaction requirements of Ordinary Fill shown in Section 4.3.2.

- Fill placed in the top 12 inches beneath sidewalks and exterior slabs should consist of Structural Fill with less than 5 percent fines.

- When crushed stone is required in the drawings or it is used for the convenience of the contractor, it should be wrapped in a geotextile fabric for separation. The geotextile fabric should not be used under retaining walls as it promotes a plane of sliding.

- After the surficial materials are removed to a depth of 24 inches within the proposed paved areas in accordance with the recommendations in Section 3.1, the exposed existing fill and buried organic soil deeper than 24 inches beneath the bottom of the proposed pavement should be improved by compacting the exposed surface with at least six (6) passes of a vibratory roller compactor imparting a dynamic effort of at least 40 kips. Where soft zones of soil are observed, the soft soil should be removed, and the grade should be restored using Ordinary Fill to the bottom of the proposed subbase layer. If pumping of the existing fill or



buried organic soil deeper than 18 inches beneath the bottom of the proposed pavement is observed, the soft and/or pumping material should be removed and replaced.

- When crushed stone is required in the drawings or is used for the convenience of the contractor, it should be wrapped in a geotextile fabric for separation except where introduction of the geotextile fabric promotes sliding. A geotextile fabric should not be placed between the bottoms of the footings/pile caps and the crushed stone.

- An LGCI representative should observe the exposed subgrades prior to fill and concrete placement to verify that the exposed bearing materials are suitable for the design soil bearing pressure. If soft or loose pockets are encountered in the footing excavations, the soft or loose materials should be removed and the bottom of the footing should be placed at a lower elevation on firm soil, or the resulting excavation should be backfilled with Structural Fill, or crushed stone wrapped in a filter fabric.

4.2 Subgrade Protection

The onsite fill and natural soils are frost susceptible. If construction takes place during freezing weather, special measures should be taken to prevent the subgrade from freezing. Such measures should include the use of heat blankets or excavating the final six inches of soil just before pouring the concrete. Footings and pile caps should be backfilled as soon as possible after footing construction. Soil used as backfill should be free of frozen material, as should the ground on which it is placed. Filling operations should be halted during freezing weather.

Materials with high fines contents are typically difficult to handle when wet, as they are sensitive to moisture content variations. Subgrade support capacities may deteriorate when such soils become wet and/or disturbed. The contractor should keep exposed subgrades properly drained and free of ponded water. Subgrades should be protected from machine and foot traffic to reduce disturbance.

4.3 Fill Materials

Structural Fill and Ordinary Fill should consist of inert, hard, durable sand and gravel free from organic matter, clay, surface coatings, and deleterious materials, and should conform to the gradation requirements shown below.

4.3.1 Structural Fill

The Structural Fill should have a plasticity index of less than 6 and should meet the gradation requirements shown below. Structural Fill should be compacted in maximum 9-inch loose lifts to at least 95 percent of the Modified Proctor maximum dry density (ASTM D1557), with moisture contents within ±2 percentage points of the optimum moisture content.



Sieve Size Percent	Passing by Weight
3 inches	100
1 ½ inch	80-100
½ inch	50-100
No. 4	30-85
No. 20	15-60
No. 60	5-35
No. 200*	0-10

* 0 – 5 for the top 12 inches under sidewalks, exterior slabs, pads, and walkways

4.3.2 Ordinary Fill

Ordinary Fill should have a plasticity index of less than 6 and should meet the gradation requirements shown below. Ordinary Fill should be compacted in maximum 9-inch loose lifts to at least 95 percent of the Modified Proctor maximum dry density (ASTM D1557), with moisture contents within ±2 percentage points of the optimum moisture content.

Sieve Size Percent	Passing by Weight
6 inches	100
1 inch	50-100
No. 4	20-100
No. 20	10-70
No. 60	5-45
No. 200	0-20

4.4 Reuse of Onsite Materials

Based on our field observations and the results of the grain-size analyses, the onsite fill free of organic matter may be used as Ordinary Fill.

The contractor should avoid mixing the reusable soils with fine-grained and/or organic soils. The soils to be reused should be excavated and stockpiled separately for compliance testing. Soils with 20 percent or greater fines contents are generally very sensitive to moisture content variations and are susceptible to frost. Such soils are very difficult to compact at moisture contents that are much higher or much lower than the optimum moisture content determined from the laboratory compaction test. Therefore, strict moisture control should be implemented during the compaction of onsite soils with fines contents of 20 percent or greater. The contractor should be prepared to remove and replace such soils if pumping occurs.

If needed, the onsite material could be blended with imported rock and processed in a crusher to produce fill meeting the gradation requirements of the materials in Section 4.3. Suitable imported material and amended/improved materials should be stockpiled separately from unimproved onsite soils.



Materials to be used as fill should first be tested for compliance with the applicable gradation specifications.

4.5 Groundwater Control Procedures

Based on the groundwater levels measured in our borings, we do not anticipate that major groundwater control procedures will be needed during construction. We anticipate that filtered sump pumps installed in a series of sump pump pits located at least 3 feet below the bottom of planned excavations may be sufficient to handle groundwater and surface runoff that may enter the excavation during wet weather.

The contractor should be permitted to employ whatever commonly accepted means and practices are necessary to maintain the groundwater level below the bottom of the excavation and to maintain a dry excavation during wet weather. Groundwater levels should be maintained at a minimum of 1 foot below the bottom of the excavations during construction. The placement of reinforcing steel or concrete in standing water should not be permitted.

To reduce the potential for sinkholes developing over sump pump pits after the sump pumps are removed, the crushed stone placed in the sump pump pits should be wrapped in a geotextile fabric. Alternatively, the crushed stone should be entirely removed after the sump pump is no longer in use, and the sump pump pit should be restored with suitable backfill.

4.6 Temporary Excavations

All excavations to receive human traffic should be constructed in accordance with OSHA guidelines.

The site soils should generally be considered Type “C” and should have a maximum allowable slope of 1.5 Horizontal to 1 Vertical (1.5H:1V) for excavations less than 20 feet deep. Deeper excavations, if needed, should have shoring designed by a professional engineer.

The contractor is solely responsible for designing and constructing stable, temporary excavations and should shore, slope, or bench the sides of the excavations as required to maintain the stability of the excavation sides and bottom.



5. RECOMMENDATIONS FOR FUTURE WORK

We recommend engaging LGCI to perform the following services:

- Prepare Earth Moving Specifications and review the geotechnical aspect of contract drawings.
- Review contractor submittals and Request for Information (RFIs);
- Provide a field engineer during construction to observe the pier load test and the installation of the helical piers.



6. REPORT LIMITATIONS

Our analyses and recommendations are based on project information provided to us at the time of this report. If changes to the type, size, and location of the proposed structures or to the site grading are made, the recommendations contained in this report shall not be considered valid unless the changes are reviewed, and the conclusions and recommendations modified in writing by LGCI. LGCI cannot accept responsibility for designs based on our recommendations unless we are engaged to review the final plans and specifications to determine whether any changes in the project affect the validity of our recommendations, and whether our recommendations have been properly implemented in the design.

It is not part of our scope to perform a more detailed site history; therefore, we have not explored for or researched the locations of buried utilities or other structures in the area of the proposed construction. Our scope did not include environmental services or services related to moisture, mold, or other biological contaminants in or around the site.

The recommendations in this report are based in part on the data obtained from the subsurface explorations. The nature and extent of variations between explorations may not become evident until construction. If variations from anticipated conditions are encountered, it may be necessary to revise the recommendations in this report. We cannot accept responsibility for designs based on recommendations in this report unless we are engaged to 1) make site visits during construction to check that the subsurface conditions exposed during construction are in general conformance with our design assumptions and 2) ascertain that, in general, the work is being performed in compliance with the contract documents.

Our report has been prepared in accordance with generally accepted engineering practices and in accordance with the terms and conditions set forth in our agreement. No other warranty, expressed or implied, is made. This report has been prepared for the exclusive use of Roger Williams Park Zoo for the Proposed Red Panda Exhibit at the Roger Williams Park Zoo in Providence, Rhode Island as conceived at this time.



7. REFERENCES

In addition to the references included in the text of the report, we used the following references:

American Society of Civil Engineers, "Minimum Design Loads and Associated Criteria for Buildings and Other Structures," ASCE/SEI 7-16, 2017.

Rhode Island State Building Code (Feb. 2022), comprised of the International Building Code of 2018 (IBC-2018) and RI amendments.

The Department of Labor, Occupational Safety and Health Administration (1989), "Occupational Safety and Health Standards - Excavations; Final Rule," 20 CFR Part 1926, Subpart P.

USGS Providence, RI topographic map from http://mapserver.mytopo.com.



Table 1 - Summary of LGCI's Borings
Proposed Red Panda Exhibit - RWPZ
Providence, RI
LGCI Project No. 2251

Boring No.	Ground Surface Elevation (ft.)[1]	Groundwater[2] Depth / El. (ft.)	Bottom of Topsoil Depth / El. (ft.)	Bottom of Fill Depth / El. (ft.)	Bottom of Buried Organic Soil Depth / El. (ft.)	Bottom of Sand Depth / El. (ft.)	Bottom of Boring Depth / El. (ft.)
B-1	32.0	4.0 / **28.0**	2.0 / **30.0**	8.0 / **24.0**	-[4] / **36.0**	41.0 [5]/ **-9.0**	41.0 / **-9.0**
B-2	33.0	4.0 / **29.0**	2.0 / **31.0**	- / **-**	7.2 / **25.8**	31.0 [5]/ **2.0**	31.0 / **2.0**
B-3	34.0	6.0 / **28.0**	0.9 / **33.1**	8.0 [3]/ **26.0**	-[4] / **38.0**	- / **-**	8.0 / **26.0**

1. The ground surface elevation was interpolated to the nearest foot from drawing titled: "Existing Condition Site For The Red Panda Exhibit at Roger Williams Zoo Situated On 1000 Elmwood Avenue, Providence, Rhode Island," prepared by Garofalo & Associates, Inc., dated October 19, 2022, and provided to LGCI by Roger Williams Park Zoo via e-mail on October 19, 2022.
2. Groundwater was measured during drilling, at the end of drilling, after drilling, or based on sample moisture whichever is shallower.
3. Boring terminated in fill layer due to time constraints and drillers running out of water.
4. A layer of organic soil was encountered within the fill layer
5. Boring terminated in sand layer.
6. "**-**" means groundwater or layer was not encountered.



Contour Intervals: 3 meters

Figure based on USGS topographic map of Providence, RI obtained from www.mytopo.com/maps

Client:	Project:	Figure 1 – Site Location Map	
Roger Williams Park Zoo (RWPZ)	Proposed Red Panda Exhibit - RWPZ		
LGCI Lahlaf Geotechnical Consulting, Inc.	Project Location: Providence, RI	LGCI Project No.: 2251	Date: Nov. 2022

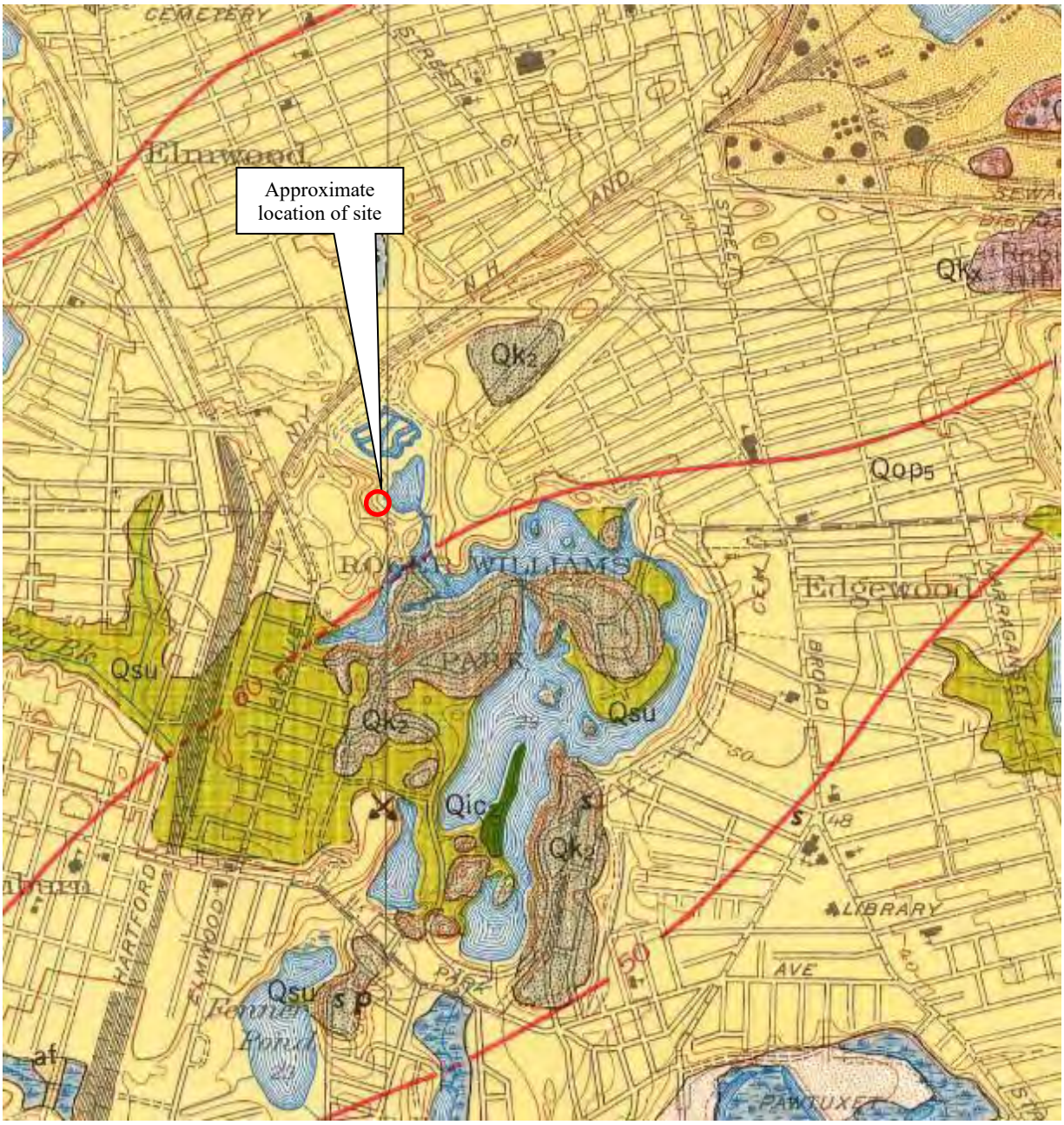

Qop5

Outwash plains
Sorted sand and local deposits of coarse gravel.

Figure based on map titled: "Geologic Map of the Providence Quadrangle, Rhode Island, Surficial Geology," prepared by j. Hiram Smith in 1956, Geological Survey, Map GQ-84.

Client:	Project:	
Roger Williams Park Zoo (RWPZ)	Proposed Red Panda Exhibit - RWPZ	Figure 2 – Surficial Geologic Map

	Project Location:	LGCI Project No.:	Date:
LGCI Lahlaf Geotechnical Consulting, Inc.	Providence, RI	2251	Nov. 2022

Legend

⊕ Approximate location of borings advanced by Northern Drill Services, Inc. (NDS) of Northborough, MA on November 4, 2022, and observed by Lahlaf Geotechnical Consulting, Inc. (LGCI).

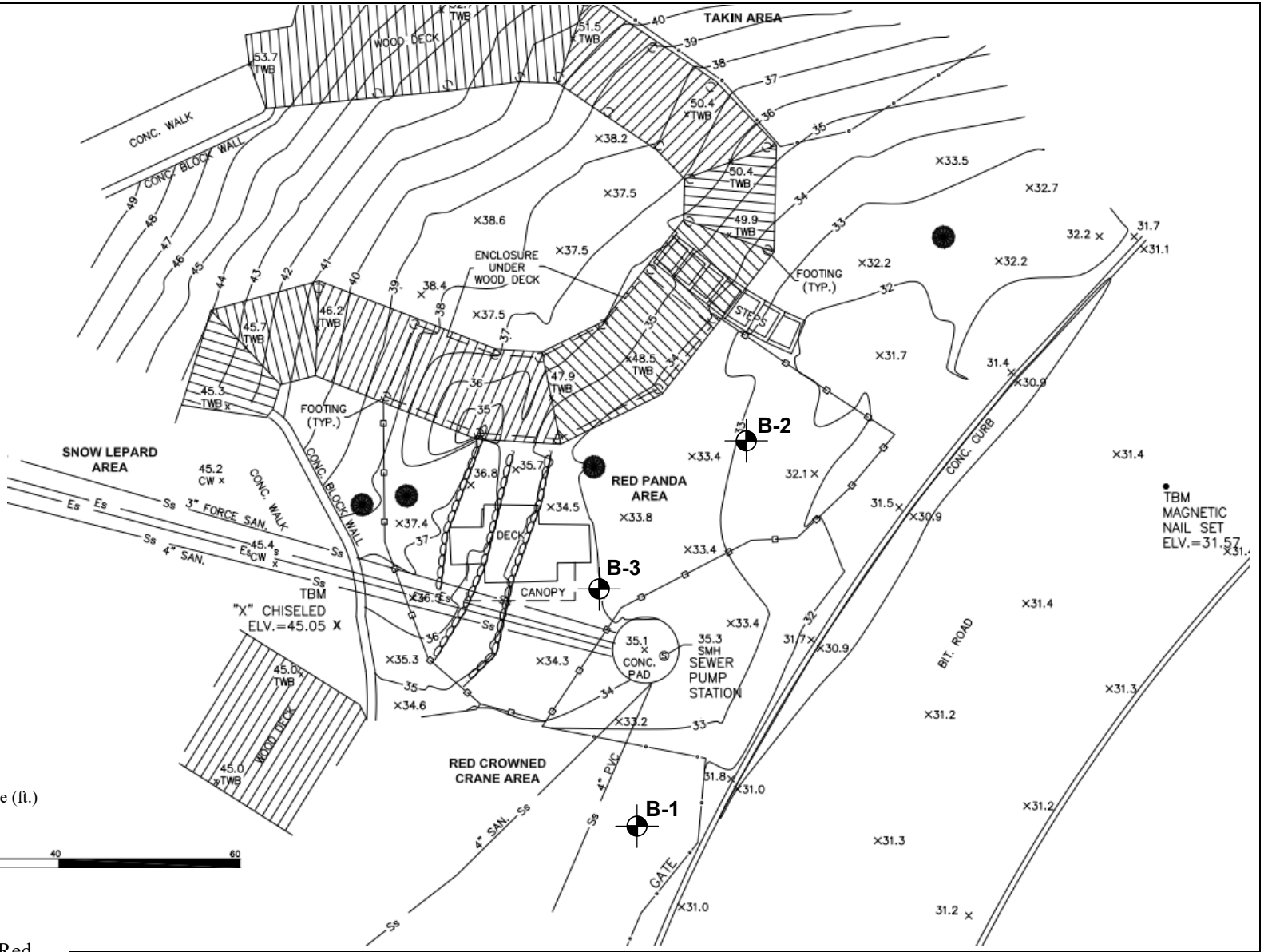

RI STATE PLANE – NAD 83

Approximate Scale (ft.)

0 5 10 20 40 60

Note

Figure based on drawing titled: "Existing Condition Site For The Red Panda Exhibit At Roger Williams Park Zoo Situated On 1000 Elmwood Avenue, Providence, Rhode Island," prepared by Garofalo & Associates, Inc., dated October 19, 2022, and provided to LGCI by RWPZ via e-mail on October 19, 2022.

Client: Roger Williams Park Zoo (RWPZ)	Project: Proposed Red Panda Exhibit (RWPZ)	Figure 3 – Boring Location Plan	
LGCI Lahlaf Geotechnical Consulting, Inc.	Project Location: Providence, RI	LGCI Project No.: 2251	Date: Nov. 2022

Appendix A – LGCI's Boring Logs

LGCI Lahlaf Geotechnical Consulting, Inc.
100 Chelmsford Road, Suite 2
Billerica, MA 01862
Telephone: (978) 330-5912
Fax: (978) 330-5056

BORING LOG

CLIENT: Roger William Park Zoo (RWPZ)
PROJECT NAME: Proposed Red Panda Exhibit - RWPZ
LGCI PROJECT NUMBER: 2251
PROJECT LOCATION: Providence, RI

DATE STARTED: 11/4/22 **DATE COMPLETED:** 11/4/22
BORING LOCATION: Within existing crane exhibit
COORDINATES: NA
SURFACE El.: 32 ft. (see note 1) **TOTAL DEPTH:** 41 ft.
WEATHER: 60's / Sunny
GROUNDWATER LEVELS:
DURING DRILLING: 4.0 ft. / El. 28.0 ft. Based on sample moisture
AT END OF DRILLING: 6.2 ft. / El. 25.8 ft.
OTHER: -

DRILLING SUBCONTRACTOR: Northern Drill Service, Inc.
DRILLING FOREMAN: Jon Beirholm
DRILLING METHOD: Drive and wash with 4-inch casing
DRILL RIG TYPE/MODEL: Diedrich D-25
HAMMER TYPE: Automatic
HAMMER WEIGHT: 140 lb. **HAMMER DROP:** 30 in.
SPLIT SPOON DIA.: 1.375 in. I.D., 2 in. O.D.
CORE BARREL SIZE: NA
LOGGED BY: TG **CHECKED BY:** NP

Depth (ft.)	El. (ft.)	Sample Interval (ft.)	Sample Number	Blow Counts (N Value)	Pen./Rec. (in.)	Remark	Strata	Depth El.(ft.)	Material Description
		0							
	30.0	2	S1	2-2-1-2 (3)	24/5		Topsoil	2.0	S1 - Topsoil
			S2	3-4-5-2 (9)	24/3			30.0	S2 - Silty SAND (SM), fine, ~25% fines, trace of organic soil, trace of roots, black, moist
		4	S3	1-1-1-2 (2)	24/8	1	Buried Organic Soil	6.0	REMARK 1: Casing dropped about 8 inches in height when sampling S3. Removed casing and sampled S3. S3 - Silty SAND (SM), fine to medium, 25-30% fines, trace of organic soil, trace of peat fibers, black to gray, moist
5		6	S4	3-3-3-8 (6)	24/24		Fill	26.0 8.0	S4 - Poorly Graded SAND with Silt (SP-SM), fine to medium, trace coarse, 10-15% fines, trace of organic soil, gray, moist
	25.0	8	S5	9-14-17-14 (31)	24/0		Sand	24.0	S5 - No recovery, drove 3-inch spoon and obtained sample: Silty SAND (SM), fine to coarse, 20-25% fines, 5-10% fine to coarse subrounded gravel, gray, wet
10		10	S6	9-13-13-12 (26)	24/16				S6 - Similar to S5, ~25% fines, 0-5% fine subrounded gravel, orange-brown
	20.0	12							
		14	S7	8-7-8-6 (15)	24/15				S7 - SILT with Sand (ML), slightly plastic, 15-20% fine sand, gray, wet
15		16							
	15.0	19	S8	6-5-6-6 (11)	24/14				S8 - Poorly Graded SAND with Silt (SP-SM), fine to medium, 10-15% fines, gray, wet
20		21							
	10.0	24							
25				13-12-15-14					S9 - No recovery, drove 3-inch spoon and obtained sample: Well Graded SAND with Silt and Gravel (SW-SM), fine to coarse, 10-15% fines,

GENERAL NOTES:

1. The ground surface elevation was interpolated to the nearest foot from drawing titled: "Existing Condition SIte For The Red Panda Exhibit At Roger Williams Zoo Situated On 1000 Elmwood Avenue, Providence, Rhode Island," prepared by Garofalo & Associates, Inc., dated October 19, 2022, and provided to LGCI by Roger Williams Park Zoo (RWPZ) via e-mail on October 19, 2022.

LGCI
Lahlaf Geotechnical Consulting, Inc.
100 Chelmsford Road, Suite 2
Billerica, MA 01862
Telephone: (978) 330-5912
Fax: (978) 330-5056

BORING LOG

CLIENT: Roger William Park Zoo (RWPZ)
PROJECT NAME: Proposed Red Panda Exhibit - RWPZ
LGCI PROJECT NUMBER: 2251
PROJECT LOCATION: Providence, RI

Depth (ft.)	El. (ft.)	Sample Interval (ft.)	Sample Number	Blow Counts (N Value)	Pen./Rec. (in.)	Remark	Strata	Depth El.(ft.)	Material Description
		24	S9	(27)	24/0		Sand	24.0	~15% fine to coarse subrounded gravel, gray, wet
		26							
	5.0								
		29	S10	9-6-8-9 (14)	24/0				S10 - No recovery, drove 3-inch spoon and obtained sample: Similar to S9, 20-25% fine to coarse subrounded gravel
30		31							
	0.0								
		34	S11	8-6-9-12 (15)	24/0				S11 - No recovery, drove 3-inch spoon and obtained sample: Similar to S9, ~20% fine to coarse subrounded gravel, gray to brown
35		36							
	-5.0								
		39	S12	24-11-6-5 (17)	24/12				S12 - Well Graded SAND with Silt (SW-SM), fine to coarse, ~10% fines, 5-10% fine subrounded gravel, gray, wet
40		41						41.0	
	-10.0								Bottom of borehole at 41.0 feet. Borehole backfilled with drill cuttings and 0.5 bags of gravel.
45									
	-15.0								
50									
	-20.0								
55									
	-25.0								
60									

LGCI Lahlaf Geotechnical Consulting, Inc.
100 Chelmsford Road, Suite 2
Billerica, MA 01862
Telephone: (978) 330-5912
Fax: (978) 330-5056

BORING LOG

B-2

CLIENT: Roger William Park Zoo (RWPZ)
PROJECT NAME: Proposed Red Panda Exhibit - RWPZ
LGCI PROJECT NUMBER: 2251
PROJECT LOCATION: Providence, RI

DATE STARTED: 11/4/22 **DATE COMPLETED:** 11/4/22
BORING LOCATION: Within existing red panda exhibit
COORDINATES: NA
SURFACE El.: 33 ft. (see note 1) **TOTAL DEPTH:** 31 ft.
WEATHER: 60's / Sunny
GROUNDWATER LEVELS:
DURING DRILLING: 4.0 ft. / El. 29.0 ft. Based on sample moisture
AT END OF DRILLING: 6.2 ft. / El. 26.8 ft.
OTHER: -

DRILLING SUBCONTRACTOR: Northern Drill Service, Inc.
DRILLING FOREMAN: Jon Beirholm
DRILLING METHOD: Drive and wash with 4-inch casing
DRILL RIG TYPE/MODEL: Diedrich D-25
HAMMER TYPE: Automatic
HAMMER WEIGHT: 140 lb. **HAMMER DROP:** 30 in.
SPLIT SPOON DIA.: 1.375 in. I.D., 2 in. O.D.
CORE BARREL SIZE: NA
LOGGED BY: TG **CHECKED BY:** NP

Depth (ft.)	El. (ft.)	Sample Interval (ft.)	Sample Number	Blow Counts (N Value)	Pen./Rec. (in.)	Remark	Strata	Depth El.(ft.)	Material Description
		0	S1	2-2-2-1 (4)	24/8		Topsoil	2.0	S1 - Topsoil
	30.0	2	S2	4-6-3-3 (9)	24/9				S2 - Silty SAND (SM), fine, ~20% fines, trace of organic soil, trace of peat fibers, black, moist
5		4	S3	2-1-1-1 (2)	24/15	1	Buried Organic Soil		REMARK 1: Drove casing to depth of 4 feet then removed casing to sample S3. S3 - Top 6": Poorly Graded SAND with Silt (SP-SM), mostly fine to medium, 10-15% fines, 5-10% fine subrounded gravel, trace of organic soil, brown, wet Bot. 9": Silty SAND (SM), fine to medium, 25-30% fines, trace of organic soil, trace of peat fibers, black, wet
		6	S4	5-5-8-8 (13)	24/24			7.2	S4 - Top 14": Similar to S3 Bot. 9"
	25.0	8					Sand		Bot. 10": SILT with Sand (ML), non-plastic, 20-25% fine sand, gray, wet
10		9	S5	15-18-18-17 (36)	24/12				S5 - Silty SAND (SM), fine to coarse, ~20% fines, 5-10% fine to coarse subrounded gravel, gray, wet
		11							
	20.0								
15		14	S6	7-7-9-7 (16)	24/15				S6 - Silty SAND (SM), fine, 25-30% fines, gray, wet
		16							
	15.0								
20		19	S7	4-5-8-10 (13)	24/16				S7 - Similar to S6, 20-25% fines, orange-brown
		21							
	10.0								
25		24		5-4-6-6					S8 - SILT (ML), slightly plastic, ~10% fine sand, gray, wet

GENERAL NOTES:

1. The ground surface elevation was interpolated to the nearest foot from drawing titled: "Existing Condition SIte For The Red Panda Exhibit At Roger Williams Zoo Situated On 1000 Elmwood Avenue, Providence, Rhode Island," prepared by Garofalo & Associates, Inc., dated October 19, 2022, and provided to LGCI by Roger Williams Park Zoo (RWPZ) via e-mail on October 19, 2022.

LGCI
Lahlaf Geotechnical Consulting, Inc.
100 Chelmsford Road, Suite 2
Billerica, MA 01862
Telephone: (978) 330-5912
Fax: (978) 330-5056

BORING LOG

B-2

CLIENT: Roger William Park Zoo (RWPZ)
PROJECT NAME: Proposed Red Panda Exhibit - RWPZ
LGCI PROJECT NUMBER: 2251
PROJECT LOCATION: Providence, RI

Depth (ft.)	El. (ft.)	Sample Interval (ft.)	Sample Number	Blow Counts (N Value)	Pen./Rec. (in.)	Remark	Strata	Depth El.(ft.)	Material Description
		24	S8	(10)	24/15				
		26							
	5.0						Sand		
		29							S9 - Sandy SILT (ML), non-plastic, 30-35% fine sand, gray, wet
30			S9	5-5-5-5 (10)	24/14				
		31						31.0	
	0.0								Bottom of borehole at 31.0 feet. Borehole backfilled with drill cuttings and 1 bag of gravel.
35									
	-5.0								
40									
	-10.0								
45									
	-15.0								
50									
	-20.0								
55									
	-25.0								
60									

LGCI
Lahlaf Geotechnical Consulting, Inc.
100 Chelmsford Road, Suite 2
Billerica, MA 01862
Telephone: (978) 330-5912
Fax: (978) 330-5056

BORING LOG

B-3
PAGE 1 OF 1

CLIENT: Roger William Park Zoo (RWPZ)
PROJECT NAME: Proposed Red Panda Exhibit - RWPZ
LGCI PROJECT NUMBER: 2251
PROJECT LOCATION: Providence, RI

DATE STARTED: 11/4/22 **DATE COMPLETED:** 11/4/22
BORING LOCATION: Within existing red panda exhibit near canopy
COORDINATES: NA
SURFACE El.: 34 ft. (see note 1) **TOTAL DEPTH:** 8 ft.
WEATHER: 60's / Sunny
GROUNDWATER LEVELS:
DURING DRILLING: 6.0 ft. / El. 28.0 ft. Based on sample moisture
AT END OF DRILLING: Dry at the end of drilling
OTHER: -

DRILLING SUBCONTRACTOR: Northern Drill Service, Inc.
DRILLING FOREMAN: Jon Beirholm
DRILLING METHOD: Drive and wash with 4-inch casing
DRILL RIG TYPE/MODEL: Diedrich D-25
HAMMER TYPE: Automatic
HAMMER WEIGHT: 140 lb. **HAMMER DROP:** 30 in.
SPLIT SPOON DIA.: 1.375 in. I.D., 2 in. O.D.
CORE BARREL SIZE: NA
LOGGED BY: TG **CHECKED BY:** NP

Depth (ft.)	El. (ft.)	Sample Interval (ft.)	Sample Number	Blow Counts (N Value)	Pen./Rec. (in.)	Remark	Strata	Depth El.(ft.)	Material Description
		0					Topsoil	0.9	S1 - Top 10": Topsoil
		2	S1	3-3-4-3 (7)	24/17		Fill	2.0	Bot. 7": Silty SAND (SM), fine to medium, trace coarse, 15-20% fines, 10-15% fine to coarse subrounded gravel, gray, moist
	30.0	4	S2	2-2-3-5 (5)	24/5		Buried Organic Soil		S2 - Silty SAND (SM), fine to medium, 25-30% fines, trace of organic soil, trace of roots, black, moist
5		6	S3	4-3-2-1 (5)	24/10				S3 - Silty SAND (SM), fine to medium, 15-20% fines, 5-10% fine subrounded gravel, trace of organic soil, gray, moist
		8	S4	4-5-11-3 (16)	24/24			7.2	S4 - Top 14": Silty SAND (SM), fine to medium, 25-30% fines, trace of organic soil, trace of peat fibers, black, wet
	25.0					1	Fill	8.0	Bot. 10": Poorly Graded SAND with Silt (SP-SM), fine to medium, 10-15% fines, 5-10% fine to coarse subrounded gravel, trace of organic soil, brown, moist
10									REMARK 1: Borehole terminated at depth of 8 feet due to time constraints and drillers running out of water.
	20.0								Bottom of borehole at 8.0 feet. Borehole backfilled with drill cuttings and 0.5 bags of gravel.
15									
	15.0								
20									
	10.0								
25									

GENERAL NOTES:

1. The ground surface elevation was interpolated to the nearest foot from drawing titled: "Existing Condition SIte For The Red Panda Exhibit At Roger Williams Zoo Situated On 1000 Elmwood Avenue, Providence, Rhode Island," prepared by Garofalo & Associates, Inc., dated October 19, 2022, and provided to LGCI by Roger Williams Park Zoo (RWPZ) via e-mail on October 19, 2022.

Appendix B – Laboratory Test Results

Particle Size Distribution Report

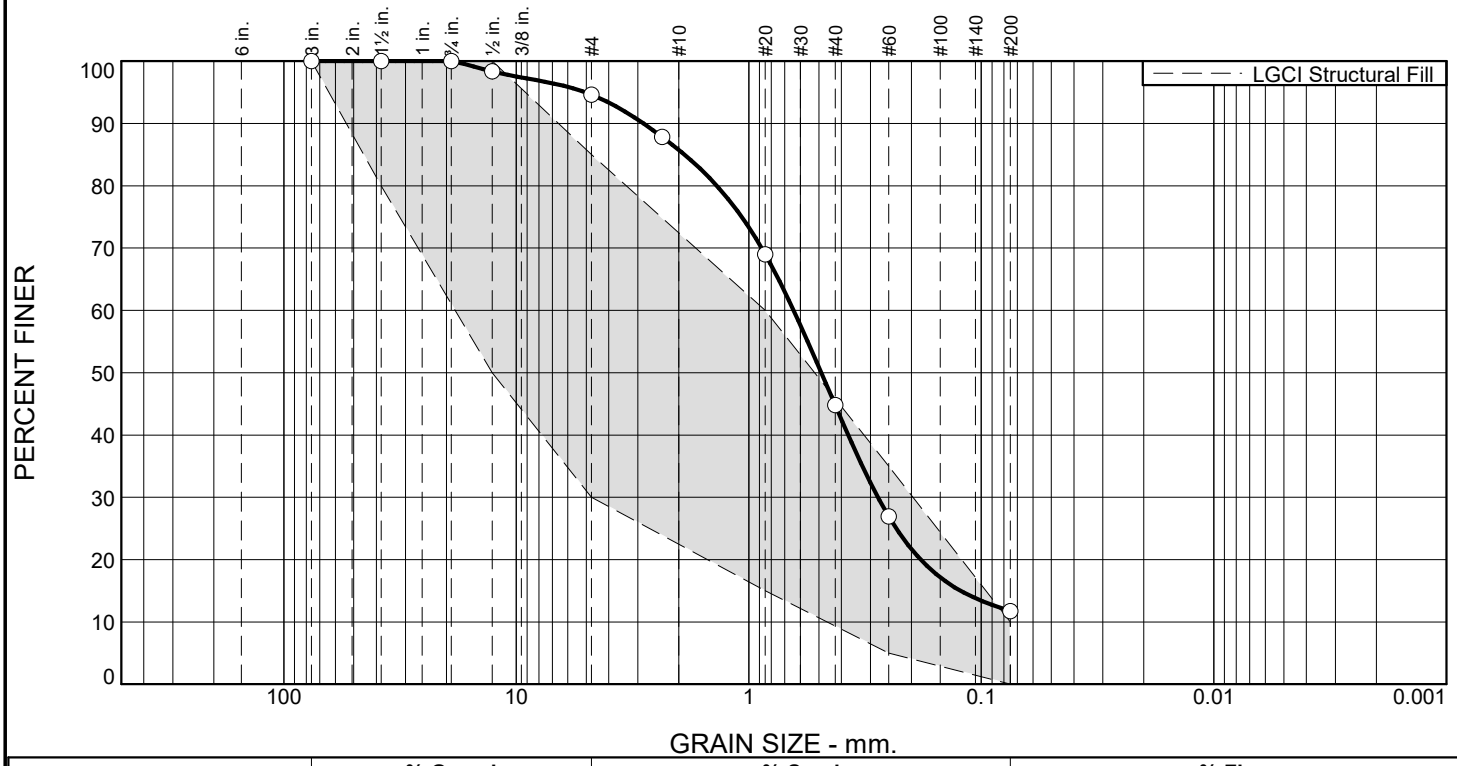

% +3"	% Gravel		% Sand			% Fines	
	Coarse	Fine	Coarse	Medium	Fine	Silt	Clay
0.0	0.0	5.4	8.8	41.0	33.1	11.7	

TEST RESULTS

Opening Size	Percent Finer	Spec.* (Percent)	Pass? (X=Fail)
3"	100.0	100.0	
1.5"	100.0	80.0 - 100.0	
0.75"	100.0		
0.5"	98.4	50.0 - 100.0	
#4	94.6	30.0 - 85.0	X
#8	87.9		
#20	69.0	15.0 - 60.0	X
#40	44.8		
#60	26.9	5.0 - 35.0	
#200	11.7	0.0 - 10.0	X

* LGCI Structural Fill

Material Description

ASTM (D 2488) Classification: Poorly Graded SAND with Silt (SP-SM), mostly fine to medium, 10-15% fines, 5-10% fine subrounded gravel, trace of organic soil, brown

Atterberg Limits (ASTM D 4318)

PL= **LL=** **PI=**

Classification

USCS (D 2487)= **AASHTO (M 145)=**

Coefficients

D_{90}= 2.8396 D_{85}= 1.8882 D_{60}= 0.6422
D_{50}= 0.4881 D_{30}= 0.2781 D_{15}= 0.1228
D_{10}= C_u= C_c=

Remarks

Buried organic soil sample.

Date Received: 11/4/22 **Date Tested:** 11/7/22

Tested By: NP

Checked By: MBH

Location: Boring B-2
Sample Number: S3 Top 6" **Depth:** 4.0'-6.0'

Date Sampled: 11/4/22

LGCI
Lahlaf Geotechnical Consulting, Inc.

Client: Roger Williams Park Zoo

Project: Proposed Red Panda Exhibit - Roger Williams Park Zoo, Providence, RI

Project No: 2251 **Figure**

Particle Size Distribution Report

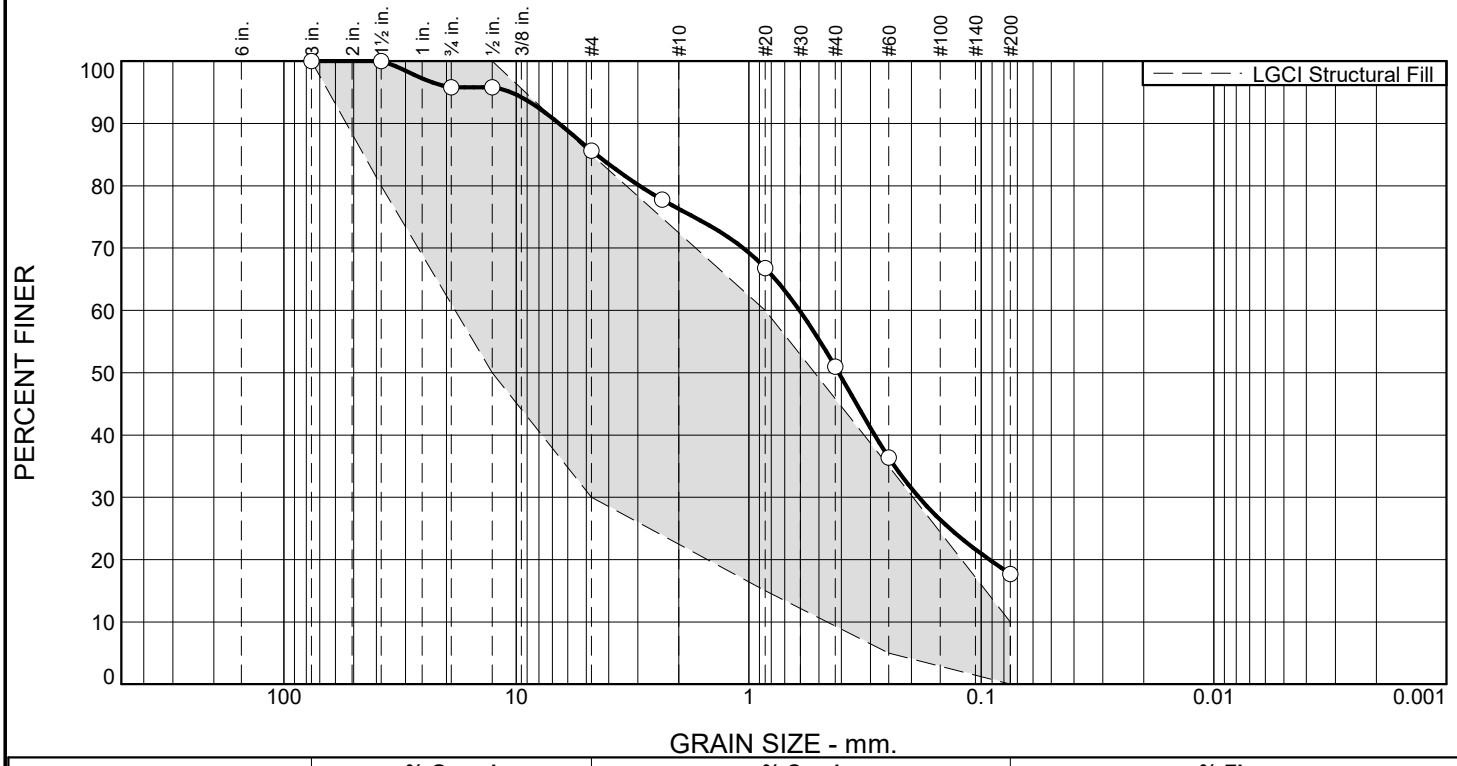

% +3"	% Gravel		% Sand			% Fines	
	Coarse	Fine	Coarse	Medium	Fine	Silt	Clay
0.0	4.2	10.1	9.4	25.3	33.3	17.7	

TEST RESULTS

Opening Size	Percent Finer	Spec.* (Percent)	Pass? (X=Fail)
3"	100.0	100.0	
1.5"	100.0	80.0 - 100.0	
0.75"	95.8		
0.5"	95.8	50.0 - 100.0	
#4	85.7	30.0 - 85.0	X
#8	77.8		
#20	66.8	15.0 - 60.0	X
#40	51.0		
#60	36.4	5.0 - 35.0	X
#200	17.7	0.0 - 10.0	X

* LGCI Structural Fill

Material Description

ASTM (D 2488) Classification: Silty SAND (SM), fine to medium, trace coarse, 15-20% fines, 10-15% fine to coarse subrounded gravel, gray

Atterberg Limits (ASTM D 4318)

PL= **LL=** **PI=**

Classification

USCS (D 2487)= **AASHTO (M 145)=**

Coefficients

D_{90}= 6.5520 D_{85}= 4.5167 D_{60}= 0.6056
D_{50}= 0.4102 D_{30}= 0.1855 D_{15}=
D_{10}= C_u= C_c=

Remarks

Fill sample.

Date Received: 11/4/22 **Date Tested:** 11/7/22

Tested By: NP

Checked By: MBH

Location: Boring B-3
Sample Number: S1 Bot. 7" **Depth:** 0.0'-2.0'

Date Sampled: 11/4/22

LGCI
Lahlaf Geotechnical Consulting, Inc.

Client: Roger Williams Park Zoo

Project: Proposed Red Panda Exhibit - Roger Williams Park Zoo, Providence, RI

Project No: 2251 **Figure**

LDL STUDIO INC. ADOPTS THE AIA FRAMEWORK FOR DESIGN EXCELLENCE 2021 - 2030

ENERGY
INTERGRATION
EQUALITY
WELL-BEING
DISCOVERY
RESILIENCE
ADAPTABILITY
CONSERVATION
SUSTAINABILITY
INTEGRITY
ECOSYSTEMS
ECONOMY

RED PANDA EXHIBIT
ROGER WILLIAMS PARK ZOO

1000 ELMWOOD AVENUE
PROVIDENCE / RI, 02907

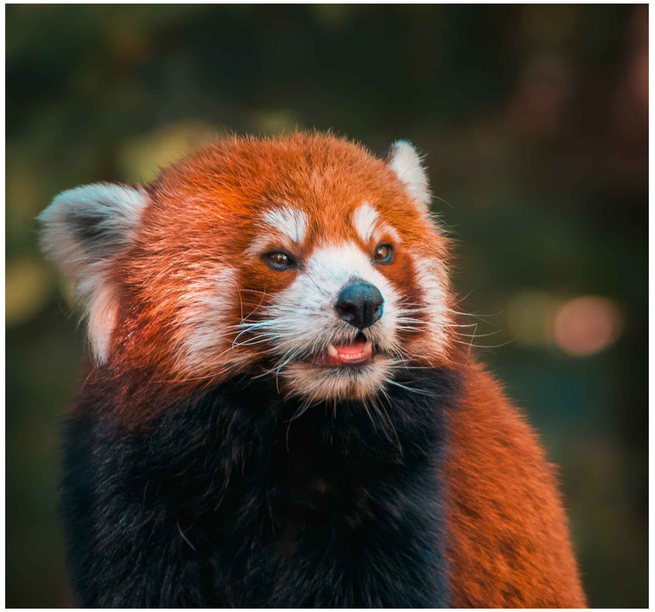

PERMIT SET - ISSUED 11/14/2022
NEW BUILDING CONSTRUCTION

INDEX OF DRAWINGS

		ISSUE DATE: PRICING SET DRAWINGS JUN. 30, 2022	BID SET SEPT. 06, 2022	PERMIT / BID SET NOVEMBER 14, 2022
ARCHITECTURAL				
G0.0	COVER SHEET	●	●	●
G1.1	GENERAL NOTES, SYMBOLS AND ABBREVIATIONS		●	●
G1.2	GENERAL NOTES, SYMBOLS AND ABBREVIATIONS		●	●
G1.3	GENERAL NOTES, SYMBOLS AND ABBREVIATIONS		●	●
G1.4	GENERAL NOTES, SYMBOLS AND ABBREVIATIONS		●	●
G1.5	GENERAL NOTES, SYMBOLS AND ABBREVIATIONS		●	●
C1.00	SITE DEMOLITION PLAN AND DEMOLITION NOTES	●	●	●
C1.01	PROPOSED SITE LAYOUT AND WORKING NOTES	●	●	●
A1.00	PROPOSED SLAB PLAN	●	●	●
A1.01	PROPOSED GROUND FLOOR PLAN	●	●	●
A1.02	PROPOSED FIRST LEVEL FLOOR PLAN	●	●	●
A1.03	PROPOSED LOWER ROOF PLAN	●	●	●
A1.04	PROPOSED UPPER ROOF PLAN	●	●	●
A1.05	PROPOSED GROUND FLOOR FINISH & EQUIPMENT LEGEND PLAN		●	●
A2.00	PROPOSED EXTERIOR ELEVATIONS	●	●	●
A2.01	PROPOSED EXTERIOR ELEVATIONS		●	●
A2.02	PROPOSED EXTERIOR ELEVATIONS		●	●
A2.03	BUILDING SECTIONS		●	●
A2.04	BUILDING SECTIONS		●	●
A2.05	BUILDING SECTIONS		●	●
A2.06	BUILDING SECTIONS		●	●
A3.00	INTERIOR ELEVATIONS		●	●
A4.00	PROPOSED REFLECTED CEILING PLAN		●	●
A5.00	ANIMAL TRANSFER TUBE DETAILS		●	●
A5.01	EXTERIOR ENCLOSURE EXHIBIT			●
A8.00	DOOR /HARDWARE & DOOR FRAME DETAILS		●	●
A8.01	WINDOWS TYPES AND GLAZING		●	●
A8.02	PARTITION SCHEDULE		●	●
A9.00	MATERIAL SCHEDULE		●	●
STRUCTURAL				
S1	FOUNDATION PLAN	●	●	●
S2	FOUNDATION PLAN	●	●	●
S3	FOUNDATION PLAN	●	●	●
S4	FOUNDATION PLAN		●	●
S5	FOUNDATION PLAN			●
MECHANICAL				
M1	RED PANDA ENCLOSURE PLUMBING PLAN	●	●	●
M2	RED PANDA ENCLOSURE HVAC PLAN	●	●	●
M3	RED PANDA ENCLOSURE MECHANICAL SPECIFICATIONS		●	●
ELECTRICAL				
E1	RED PANDA ENCLOSURE ELECTRICAL PLAN	●	●	●
E2	RED PANDA ENCLOSURE LIGHTING PLAN		●	●
E3	ELECTRICAL RISER DIAGRAMS & SCHEDULES	●	●	●
E4	ELECTRICAL SPECIFICATIONS & LEGENDS	●	●	●

PROJECT DIRECTORY

Client

RHODE ISLAND ZOOLOGICAL ASSOC.
FOR THE ROGER WILLIAMS PARK ZOO

1000 ELMWOOD AVENUE
PROVIDENCE
RHODE ISLAND 02907

ROGER WILLIAMS PARK ZOO

NEW CONSTRUCTION OF INDOOR EXHIBIT
AND 3 HOLDING ROOMS FOR RED PANDA

GREEN LDL STUDIO GOALS

ROGER WILLIAMS PARK ZOO
PRIMARY ZOO CONTACT WILL BE
MICHELLE CLAY, PROJECT SPECIFICATION MANAGER
E:MAIL - Mclay@rwpzoo.org

PROJECT LOCATION:

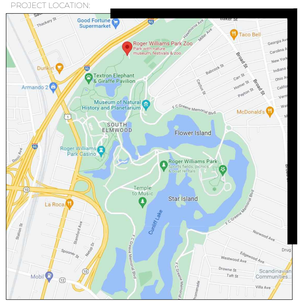

CLIENT PROJECT NUMBER:
RWPZ 2022_01

LDL STUDIO INC.
ARCHITECT / HOSPITALITY DESIGNER
106 Putnam Street
Providence, Rhode
Island USA 02909
Tel: 401.274.4516
Fax : 401.421.2631
www.ldlstudio.com

ARCHITECTS AIA 2030 CHALLENGE ADOPTER

WWW.LDLSTUDIO.COM LDL STUDIO INC. - CELEBRATING 27 YEARS OF AWARD WINNING SERVICE 1995 - 2022

IF THIS SHEET IS NOT 24 X 36 IT IS A REDUCED SCALE PRINT - SCALE ACCORDINGLY

SCALE 3"=1' · SCALE 1-1/2"=1' · SCALE 1"=1' · SCALE 3/4"=1' · SCALE 1/2"=1' · SCALE 1/4"=1' · SCALE 1/8"=1' · SCALE 1/16"=1'

STANDARD ABBREVIATIONS

ABBREVIATION	DESCRIPTION
&	AND
<	ANGLE
@	AT SPACING OF
®	CENTER LINE
#	NUMBER
x	WIDTH x HEIGHT
W/	WITH
AB	ANCHOR BOLT
ACT	ACOUSTICAL TILE
ACTC	ACOUSTICAL TILE CERAMIC
ACTFR	ACOUSTICAL TILE FIRE RATED
AD	AREA DRAIN
ADH	ADHESIVE
ADJ	ADJUSTABLE
A/C	AIR CONDITIONER
A.F.F.	ABOVE FINISH FLOOR
A.F.S.	ABOVE FINISH SLAB
ALUM	ALUMINUM
ARC	ARCHITECT, ARCHITECTURAL
AWN	AWNING
B.B.	BULLETIN BOARD
BEY	BEYOND
BIT	BITUMINOUS
BL	BASE LINE
BLDG.	BUILDING
BLK	BLOCK
BLKG	BLOCKING
BM	BEAM
BO	BY OTHERS
BOT	BOTTOM
BRD	BOARD
BRK	BRICK
BS	BOTH SIDES
BSMT	BASEMENT
BVL	BEVELED
CAB	CABINET
CAN	CANVAS
CRPT	CARPET
CSMT	CASEMENT
CSWK	CASEWORK
CI	CAST IRON
CB	CATCH BASIN
CLG	CEILING
CHAM	CHAMFER
CHIM	CHIMNEY
CIR	CIRCLE
CLR	CLEAR, CLEARANCE
C.O.	CASED OPENING
CLS	CLOSER
CLO	CLOSET
COL	COLUMN
COMB	COMBINATION
COM	COMMON
CONC.	CONCRETE
C.M.U.	CONCRETE MASONRY OPENING
CONST	CONSTRUCTION
CONT	CONTINUOUS
CONTR	CONTRACT, CONTRACTOR
CJ	CONTROL JOINT
CPR	COPPER
COORD	COORDINATE
CG	CORNER GUARD
CORR	CORRUGATED
CNTR	COUNTER
CS	COUNTERSINK
CRS	COURSE
C.R.	CURTAIN ROD
C.TR.	CURTAIN TRACK
DRP	DAMPER
DP	DAMP PROOFING
DE	DEAD LOAD
DEM	DEMOLISH, DEMOLITION
DTL	DETAIL
DIAG	DIAGONAL
DIA	DIAMETER
DIM	DIMENSION
DW	DISHWASHER
DSP	DISPENSER
DR	DOOR
DN	DOWN
DS	DOWNSPOUT
D.TR.	DRAPERY TRACK
DWR	DRAWER
DWG.	DRAWING
D.F.	DRINKING FOUNDATION
DRL	DRINK RAIL

ABBREVIATION	DESCRIPTION
EA	EACH
E	EAST
ELEC	ELECTRICAL
EP	ELECTRICAL PANEL
EWC	ELECTRIC WATER COOLER
ELEV/EL	ELEVATION
EQ	EQUAL
EQUIP	EQUIPMENT
EXIST	EXISTING
EXP. JT.	EXPANSION JOINT
EXT	EXTERIOR
FBO	FURNISHED BY OWNER
FOB	FACE OF BLOCK
FOC	FACE OF CONCRETE
FOF	FACE OF FINISH
FOM	FACE OF MASONRY
FOS	FACE OF STUDS
FAS	FASTEN, FASTENER
FBD	FIBERBOARD
FGL	FIBERGLASS
FIN	FINISH
FE	FIRE EXTINGUISHER
FEC	FIRE EXTINGUISHER CABINET
FFE	FIXTURE, FINISH & EQUIPMENT SCHEDULE
FIXT	FIXTURE
FLG	FLASHING
FLR	FLOOR(ING)
FD	FLOOR DRAIN
FLUR	FLUORESCENT
FLJ	FLUSH JOINT
FTG	FOOTING
FDN	FOUNDATION
FR	FRAME (D) (ING)
FS	FULL SIZE
FUR	FURRED (ING)
GA	GAGE, GAUGE
GV	GALVANIZED
GC	GENERAL CONTRACTOR
GL	GLASS, GLAZING
GLB	GLASS BLOCK
GLAM	GLUED LAMINATE
GB	GRAB BAR
GD	GRADE, GRADING
GRN	GRANITE
GVL	GRAVEL
GRT	GROUT
GRD	GUARD
GUT	GUTTER
GYP	GYPSUM
GWB	GYPSUM WALL BOARD
HC	HANDICAP
HRL	HANDRAIL
HDW	HARDWARE
HWD	HARDWOOD
HRD	HEADER
HTG	HEATING
HVAC	HEATING/VENTILATING/AIR CONDITIONING
HD	HEAVY DUTY
HT	HEIGHT
HP	HIGH POINT
HCR	HOLLOW CORE
HORIZ	HORIZONTAL
HB	HOSE BIB
HR	HOUR
INCAN	INCANDESCENT
ID	INSIDE DIAMETER
INS	INSULATE (ED) (ING)
IGL	INSULATING GLASS
INSUL	INSULATION
INT	INTERIOR
INTM	INTERMEDIATE
INV	INVERT
JC	JANITOR'S CLOSET
JT	JOINT
JF	JOINT FILLER
JST	JOIST
KPL	KICKPLATE
KIT	KITCHEN
KD	KNOCKDOWN
LBL	LABEL
LAB	LABORATORY
LB	LAG BOLT
LAM	LAMINATE (ED)
LAV	LAVATORY
LEN	LENGTH
LT	LIGHT
LTL	LINTEL
LL	LIVE LOAD
LOC	LOCATE
LPT	LOW POINT

ABBREVIATION	DESCRIPTION
MFG	MANUFACTURE (ER)
MRB	MARBLE
MAS	MASONRY
M.O.	MASONRY OPEN
MTL	MATERIAL
MAX	MAXIMUM
MECH	MECHANIC (AL)
MBR	MEMBRANE
MTL	METAL
MT	METAL THRESHOLD
MIN	MINIMUM
MIR	MIRROR
MISC	MISCELLANEOUS
MLD	MOLDING
MTD	MOUNTED
MTG	MOUNTING
MULL	MULLION
NR	NOISE REDUCTION
NOM	NOMINAL
N	NORTH
NIC	NOT IN CONTRACT
NTS	NOT TO SCALE
NO	NUMBER
OC	ON CENTER
OP	OPAQUE
OPG	OPENING
OPH	OPPOSITE HAND
OD	OUTSIDE DIAMETER
OA	OVERALL
PNT	PAINT (ED)
PNL	PANEL (ING)
PB	PANIC BAR
PAR	PARALLEL
PRPT	PARAPET
PBD	PARTICLE BOARD
PART	PARTITION
PERF	PERFORATE (ED)
PLAS	PLASTER
PLA	PLASTIC
PLAM	PLASTIC LAMINATE
PL	PLATE
PG	PLATE GLASS
PLMG	PLUMBING
PLYW'D	PLYWOOD
PPL	PROPERTY LINE
PT	POINT
PVC	POLYVINYL CHLORIDE
PCF	POUNDS PER CUBIC FOOT
PLF	POUNDS PER LINEAR FOOT
PSF	POUNDS PER SQUARE FOOT
PSI	POUNDS PER SQUARE INCH
PCC	PRECAST CONCRETE
PREFAB	PREFABRICATE (ED)
PRF	PREFINISHED
PREM	PREMOULDING
PM	PRESS METAL
RBT	RABBET
RAD	RADIUS
RFT	RAFTER
RL	RAIL (ING)
RECP	RECEPTOR (ICAL)
REC	RECESS (ED)
REF	REFER (ENCE)
RFL	REFLECT (ED) (IVE)
REFRIG	REFRIGERATOR
REG	REGISTER
REIN	REINFORCE (ED) (ING)
RECP	REINFORCED CONCRETE PIPE
REM	REMOVE
REQ'D	REQUIRED
RES	RESILIENT
RET	RETURN
RETA	RETURN AIR
RVS	REVERSE (SIDE)
REV	REVISE (S) (ED)
RH	RIGHT HAND
R	RISER
RVT	RIVET
R&S	ROD & SHELF
RD	ROOF DRAIN
RFH	ROOF HATCH
RFG	ROOFING
RM	ROOM
R.O.	ROUGH OPENING
ROK	ROWLOCK
RB	RUBBER BASE
RT	RUBBER TILE
RS	RUBBER STONE

ABBREVIATION	DESCRIPTION
SFGL	SAFETY GLASS
SCH	SCHEDULE
SCRN	SCREEN
SCUP	SCUPPER
SLNT	SEALANT
STG	SEATING
SEC	SECTION
SS	SERVICE SINK
SHTH	SHEATHING
SHT	SHEET
SH	SHELF, SHELVING
SHNG	SHINGLE
SHU	SHUTTER
SIDG	SIDING
SIM	SIMILAR
SK	SINK
SKL	SKYLIGHT
SLV	SLEEVE
SLP	SLOPE
SOL	SOLDIER
SC	SOLID CORE
SP	SOUNDPROOF
S	SOUTH
SPEC	SPECIFICATION
SPH	SPLASH
SQ	SQUARE
S/S	STAINLESS STEEL
STD	STANDARD
STA	STATION
ST	STEEL
STOR	STORAGE
SF	STOREFRONT
STRUCT	STRUCTURAL
SUBFLR	SUBFLOOR
SUSP	SUSPEND
SYS	SYSTEM
TKBD	TACK BOARD
TEL	TELEPHONE
TV	TELEVISION
TG	TEMPERED GLASS
TIG	TEMPERED , INSULATED GLASS
TZ	TERRAZZO
THK	THICK (NESS)
THRES	THRESHOLD
TBRL	TO BE RELOCATED
TOBR	TO BE REMOVED
TPTN	TOILET PARTITION
TOL	TOLERANCE
T&G	TONGUE AND GROOVE
T.O.SL	TOP OF CONCRETE SLAB
T.O.J.	TOP OF JOIST
T.O.P	TOP OF PLATE
T.O.S.	TOP OF STEEL
T.O.SFRL	TOP OF SUBFLOOR
T.O.W.	TOP OF WALL
TOR	TO REMAIN
TB	TOWEL BAR
TR	TREAD
TYP.	TYPICAL
UC	UNDERCUT
UL	UNDERWRITERS LABORATORIES INC.
UNO	UNLESS NOTED OTHERWISE
UR	URINAL
UTL	UTILITY
VP	V-POINT
VB	VAPOR BARRIER
VNR	VENEER
V.I.F.	VERIFY IN FIELD
VERT	VERTICAL
VG	VERTICAL GRAIN
VIN	VINYL
VB	VINYL BASE
WSCT	WAINSCOT (TING)
WHTR	WATER HEATER
WP	WATERPROOFING
WR	WATER RESISTANT
WS	WATER STOP
WST	WEATHERSTRIP (ING)
W	WEST
WID	WIDTH, WIDE
WIN	WINDOW
W/	WITH
W/O	WITHOUT

INTERIOR ABBREVIATIONS

1. INTERIOR ABBREVIATIONS ARE USED IN FINISH SYMBOLS AND SCHEDULES.
2. " # " INDICATES THAT A NUMBER WILL FOLLOW FOR SCHEDULING.

ACT-#	ACOUSTICAL CEILING TILE
AWF-#	AWNING FABRIC
C-#	CARPET
EM-#	ENTRY MAT
EP-#	EXTERIOR PAINT
ES-#	EXTERIOR STAIN
F-#	FABRIC
FRP	FIBERGLASS REINFORCED PANEL
GL-#	GLASS
L-#	LAMINATE
MIR-#	MIRROR
P-#	PAINT
RF-#	RESILIENT FLOORING
RA-#	RESILIENT ACCESSORY
S-#	STAIN
SM-#	SLAB MATERIAL
SP-#	SPECIAL PAINT
T-#	TILE
T-#A	TILE BASE WHICH REFERS BACK TO THE TILE NUMBER
TH-#	THRESHOLD
TP-#	TILE PATTERN
VG-#	VINYL GRAPHIC
WC-#	WALL COVERING
WD-#	WOOD FLOORING
WP-#	WALL PANELING (OTHER THAN FRP)

DOOR GRAPHIC SYMBOLS

DOOR DESCRIPTION	SYMBOL
NEW DOOR IN EXISTING CONSTRUCTION (REFER TO DOOR DETAIL SHEET FOR SYMBOL DESCRIPTION)	
NEW DOOR IN NEW CONSTRUCTION (REFER TO DOOR SYMBOL FOR DESCRIPTION)	
EXISTING DOOR TO REMAIN	

WINDOW GRAPHIC SYMBOLS

WINDOW DESCRIPTION	SYMBOL
NEW WINDOW IN EXISTING CONSTRUCTION (REFER TO WINDOW DETAIL SHEET FOR SYMBOL DESCRIPTION)	
NEW WINDOW IN NEW CONSTRUCTION (REFER TO WINDOW SYMBOL FOR DESCRIPTION)	
EXISTING WINDOW TO REMAIN	
EXISTING WINDOW AND FRAME TO BE REMOVED (UNLESS NOTED OTHERWISE)	

GRAPHIC SYMBOLS

SYMBOL NAME	SYMBOL
STRUCTURAL COLUMN LINE / BUBBLE	A — COLUMN LINE LETTER; COLUMN LINE; 1 — COLUMN LINE NUMBER
ELEVATION SYMBOL	A, B, C, D — ELEVATION IDENTIFICATION; 1 — ELEVATION No. (UNFOLD ELEVATION CLOCKWISE, NO LETTER MEANS NO ELEVATIONS SHOWN); A2.1 — SHEET No. WHERE ELEVATION SHOWN
DOOR SYMBOL	D — DOOR SYMBOL; 1 — DOOR No. HINGE SIDE OF DOOR
CASEWORK SYMBOL	C-1 — CASEWORK TAG #; INDICATES ELEV / SCHED.
FINISH SYMBOL	S-1 ES-1 — FINISH MARK; FINISH MARK
FURNISHING SYMBOL	FFE # — F.F. & E. No.
MOLDING SYMBOL	M-1 M-5 — MOLDING NO.; MOLDING NO.
ARROW HEAD	ARROW HEAD
DETAIL SYMBOL	12 — DETAIL No.; A5.1 — SHEET No. WHERE DETAIL IS SHOWN
REVISION SYMBOLS	12 — REVISION No.
TOILET ACCESSORY SYMBOL	RA# — RA FOLLOWED BY NUMBER (SEE SCHEDULE)
ROOM NAME & NUMBER	DINING — ROOM NAME; 105 — ROOM No.
ROOM SYMBOL	192 — ROOM No. (WHEN USING LEGEND)
WALL TYPE SYMBOL	C — WALL TYPE No.
WINDOW SYMBOL	W — WINDOW SYMBOL; 1 — WINDOW No.
INTERIOR WINDOW / GLAZING SYMBOL	A — WINDOW TYPE LETTER(INTERIOR)
GLAZING TYPE	GL-# — GLAZING TYPE LETTER
ELEVATION HEIGHT SYMBOL	10'-6" — ENTER HEIGHT; A.F.F. — HEIGHT TAKEN FROM WHAT
NORTH ARROW SYMBOL	TRUE NORTH — PER SITE PLAN; CALLED NORTH — PLAN NORTH ARROW
SECTION TYPE SYMBOL	4 — SECTION IDENTIFICATION; A1.1 — SHEET No. WHERE SECTION IS SHOWN
WORKING NOTES SYMBOLS	# — WORKING NOTE No.
EQUIPMENT SYMBOLS	E-# — EQUIPMENT # (SEE SCHEDULE)
FOOD SERVICE EQUIPMENT SYMBOLS	001 — EQUIPMENT # (SEE FOOD SERVICE EQPM SCHEDULE)
STRUCTURAL NOTE SYMBOLS	L-3 — HEADER / LINTEL # (IF REQUIRED)
TITLE SYMBOL	1 / A5.1 MAIN FLOOR LEVEL SCALE: 1/4"=1'-0"

MATERIAL LEGEND

SYMBOL NAME	SYMBOL	SYMBOL NAME	SYMBOL
EARTH		WOOD ROUGHING (BLOCKING)	
CONCRETE		INSULATION (BLANKET)	
POROUS FILL		RIGID INSULATION	
BRICK (ELEVATION)		STRUCTURAL METAL	
CONCRETE MASONRY UNITS		EXISTING TO REMAIN	
PLYWOOD		WOOD ROUGH (CONTINUOUS)	
WOOD FINISH			

GENERAL NOTES

1. THE GENERAL CONTRACTOR AND ALL SUBCONTRACTORS SHALL FIELD VERIFY ALL DIMENSIONS WHICH WILL AFFECT ALL OR ANY PORTIONS OF THEIR WORK UNDER THE CONTRACT. WHERE SUCH FIELD MEASUREMENTS MAKE IT IMPOSSIBLE TO CONFORM TO THE DIMENSIONS GIVEN ON THESE DRAWINGS, THE CONTRACTOR SHALL BRING SUCH CONDITIONS TO THE ATTENTION OF THE ARCHITECT / ENGINEER IN ORDER THAT THE NECESSARY REVISIONS CAN BE MADE, PRIOR TO PROCEEDING WITH THE RELATED WORK OR THE PURCHASING OF THE AFFECTED MATERIALS AND EQUIPMENT.

2. THE GENERAL CONTRACTOR SHALL BE RESPONSIBLE FOR COORDINATING ALL SUBCONTRACTORS. THIS RESPONSIBILITY SHALL INCLUDE THE TIMELY ADVANCE NOTIFICATION OF ALL OTHER CONTRACTORS AND SUBCONTRACTORS IN ORDER THAT THEIR WORK MAY BE EXECUTED IN PROPER SEQUENCE WITH ALL OTHER RELATED WORK.

3. ALL DETAILS ARE TYPICAL AND COMPLY WITH ASTM / UL / CODE REQUIREMENTS UNO (UNLESS OTHERWISE NOTED) AND ARE NOT NECESSARILY CALLED OUT ON THE DRAWINGS AT ALL LOCATIONS WHERE THEY OCCUR.

4. THE ARCHITECTURAL DRAWINGS SUGGEST THE LOCATION FOR ALL MECHANICAL, ELECTRICAL AND PLUMBING ITEMS INSTALLED UNDER THIS CONTRACT. REFER TO MECHANICAL, ELECTRICAL AND / OR PLUMBING DRAWINGS FOR ALL EQUIPMENT REQUIREMENTS.

5. THE ABBREVIATION "EXIST" SHALL MEAN EXISTING MATERIALS. WHERE "EXIST" IS OMITTED IN FRONT OF MATERIALS, IT SHALL BE UNDERSTOOD TO MEAN NEW MATERIALS TO BE FURNISHED AND INSTALLED UNDER THIS CONTRACT OR AS OTHERWISE NOTED IN THE SPECIFICATIONS OR ON THE DRAWINGS.

6. ANY EXISTING EXPOSED PLUMBING AND HEATING RISERS NOT INDICATED FOR REMOVAL SHALL BE ENCLOSED AND / OR RE-COVERED. REFER TO THE MECHANICAL AND PLUMBING DRAWINGS FOR ADDITIONAL INFORMATION.

7. WHERE EXISTING FINISH FLOORING, EQUIPMENT OR WALLS HAVE BEEN REMOVED, PREPARE AND PATCH WALLS OR FLOOR SMOOTH AND / OR LEVEL WITH REMAINING EXISTING WALLS AND FLOORS FOR APPLICATION OF NEW FINISH MATERIAL PER THE INTERIOR FINISH SCHEDULE.

8. THE GENERAL CONTRACTOR SHALL COORDINATE THE LOCATION OF ALL CHASES & TRENCHES WITH THE SUBCONTRACTORS AND SHALL CONSTRUCT THOSE CHASES / TRENCHES AND / OR CORES TO THE MINIMUM DIMENSIONS POSSIBLE SO AS TO ALLOW THE MAXIMUM AMOUNT OF USEABLE SPACE.

9. ALL MATERIALS AND FINISHES USED FOR CONSTRUCTION OF THE INTERIOR PARTITIONS CEILINGS AND FLOOR COVERINGS SHALL BE IN ACCORDANCE WITH THE REQUIREMENTS OF THE RHODE ISLAND STATE BUILDING CODE ADOPTED AND AMENDED BY THE CITY OF PROVIDENCE

10. ALL CONSTRUCTION SHALL CONFORM TO THE LEGAL REQUIREMENTS OF THE RHODE ISLAND STATE BUILDING CODE AS ADOPTED AND AMENDED BY THE CITY OF PROVIDENCE AS WELL AS ALL OTHER APPLICABLE CODE(S) AND CITY OF PROVIDENCE, STATE AND COUNTY ORDINANCES AND REGULATIONS, INCLUDING ZONING REQUIREMENTS.

11. CONTRACTOR TO VERIFY AND COORDINATE ALL HIS/HER RESPONSIBILITIES FOR INSTALLING EQUIPMENT AND CASEWORK PRIOR TO COMMENCING WORK.

12. ALL WORK SHOWN ON DRAWINGS SHALL BE BY GENERAL CONTRACTOR UNLESS NOTED OTHERWISE BY ABBREVIATION "NIC" (NOT IN CONTRACT) OR "BO" (BY OTHERS).

13. WRITTEN DIMENSIONS SUPERCEDE SCALED DRAWINGS, DO NOT SCALE.

14. ALL WORK SHALL BE PERFORMED WITHOUT DISTURBANCE TO THE SURROUNDING OCCUPANTS, IF ANY, WITH SUITABLE ADVANCE NOTIFICATION. THE GENERAL CONTRACTOR SHALL BE RESPONSIBLE FOR SCHEDULING ALL UTILITY SHUTDOWNS WITH THE BUILDING MANAGEMENT AND REMOVAL OF ALL DEBRIS FROM THE CONSTRUCTION SITE.

15. ALL SUBCONTRACTORS SHALL BE RESPONSIBLE FOR INFORMATION PERTAINING TO THEIR TRADE ON ALL DOCUMENTS. ALL BIDS SHALL BE FOR A FULL AND COMPLETE JOB.

16. ALL GYPSUM WALLBOARD SURFACES AND CONCRETE MASONRY UNIT WALLS SHALL BE PROPERLY FABRICATED AT ALL INTERSECTIONS WITH EXPANSION JOINTS SPACED AND INSTALLED IN ACCORDANCE WITH BEST PRACTICES, ASTM AND MANUFACTURER'S RECOMMENDATIONS AND SHALL BE PREPARED TO THE SATISFACTION OF THE PAINTING SUBCONTRACTOR.

17. CONTRACTOR TO PROVIDE BLOCKING AS REQUIRED BY CODE FOR LIGHT FIXTURES, SHELVING, CABINETS, SIGNS, ADA COMPLIANT FEATURES, ETC. (WHICH MAY OR MAY NOT BE INDICATED ON DRAWINGS) INCLUDING ITEMS NIC (NOT IN CONTRACT) AND FBO (FURNISHED BY OWNER).

18. CONTRACTOR TO PREPARE ALL EXISTING FLOORS TO ACCEPT ALL FLOOR COVERINGS AS SCHEDULED IN ACCORDANCE WITH THE MANUFACTURER'S REQUIREMENTS.

19. CONTRACTOR TO MAINTAIN ALL CONSTRUCTION RELATED AND PUBLIC AREAS IN A NEAT, ORDERLY AND WORKMANLIKE MANNER. ALL DEMOLITION AND CONSTRUCTION DEBRIS TO BE REMOVED BY CONTRACTOR IN HIS OWN RECEPTACLE. CONTRACTOR TO LEAVE SPACE IN "BROOM-CLEANED" CONDITION AT ALL TIMES.

20. THE GENERAL CONTRACTOR SHALL BEGIN WORK ON THE DATE OF COMMENCEMENT AND CARRY THE WORK FORWARD EXPEDITIOUSLY TO ACHIEVE SUBSTANTIAL COMPLETION ON / OR BEFORE THE DATE, AND / OR TIME STIPULATED IN THE BID FORM (IF APPLICABLE).

21. THE BIDDER'S ATTENTION IS DIRECTED TO THE FACT THAT ALL APPLICABLE FEDERAL LAWS, STATE LAWS MUNICIPAL ORDINANCES, CODES AND THE RULES AND REGULATIONS OF ALL AUTHORITIES HAVING JURISDICTION OVER THE CONSTRUCTION OF THE PROJECT SHALL APPLY TO THE CONTRACT THE SAME AS THOUGH HEREIN WRITTEN IN FULL.

22. ALL WORK, CODE COMPLIANCE, CONSTRUCTION AND LIABILITY OF EXHIBIT WILL BE THE SOLE RESPONSIBILITY OF THE OWNER. THE ARCHITECT / ENGINEER SHALL BEAR NO RESPONSIBILITY AND THE OWNER SHALL HOLD THE ARCHITECT / ENGINEER HARMLESS FOR ALL WORK CREATED OR FABRICATED BY THE OWNER OR CONTRACTOR.

23. THE GENERAL CONTRACTOR WILL BE FULLY RESPONSIBLE FOR INSPECTION OF ALL BUILDING MATERIALS ARRIVING TO THE SITE, INCLUDING THOSE BROUGHT BY SUB-CONTRACTORS, TO REJECT AND REMOVE ANY AND ALL MATERIALS WITH INDICATION OF MOLD OR FUNGI PRESENT. THE GENERAL CONTRACTOR WILL BE FULLY RESPONSIBLE FOR THE CLIMATE CONTROL OF THE INTERIOR ATMOSPHERIC CONDITIONS TO PREVENT UNWANTED MOLD AND FUNGAL GROWTH.

24. WHEN THE PROJECT REQUIRES THAT INSTALLATION OF THE WORK COMPLY WITH THE MANUFACTURER'S INSTRUCTIONS, THE INSTALLER SHALL PERFORM THE WORK IN STRICT ACCORDANCE WITH THE MOST CURRENT WRITTEN MANUFACTURER'S INSTRUCTIONS.

25. THE CONTRACTOR SHALL IDENTIFY A SINGLE EMPLOYEE TO RECEIVE ALL PRODUCTS, MATERIALS AND EQUIPMENT. THIS INDIVIDUAL WILL SIGN FOR ALL RECEIPTS. THE GENERAL CONTRACTOR SHALL PROTECT THE WORK, STORED PRODUCTS, CONSTRUCTION EQUIPMENT AND OWNER'S PROPERTY FROM THEFT AND VANDALISM AND THE PREMISES FROM ENTRY BY UNAUTHORIZED PERSONNEL UP TO THE POINT WHERE THE OWNER ACCEPTS AND TAKES POSSESSION OF THE WORK.

26. THE GENERAL CONTRACTOR WILL REPAIR ALL PROPERTY DAMAGED BY THE INSTALLERS, SUB-CONTRACTORS AND / OR LABORERS TO A LIKE NEW CONDITION OR SHALL REPLACE DAMAGED SURFACES AND MATERIALS OF PREVIOUSLY INSTALLED WORK BY ALL TRADES AT NO ADDITIONAL COST TO OWNER.

27. THE GENERAL CONTRACTOR AND ALL SUB-CONTRACTORS SHALL MAINTAIN INSURANCE COVERAGE IN ACCORDANCE WITH THE REQUIREMENTS OF AIA DOCUMENT B-201 "GENERAL CONDITIONS OF CONTRACT". THE GENERAL CONTRACTOR WILL MAINTAIN AS MANY ACTIVE FIRE EXTINGUISHERS AS NECESSARY TO INSURE THE GENERAL SAFETY OF THE PROJECT, BUT NO LESS THAN ONE (1), STRATEGICALLY LOCATED AT THE PROJECT SITE THROUGHOUT ALL PHASES OF THE CONSTRUCTION.

FEDERAL OCCUPATIONAL SAFETY AND HEALTH ACT OF 1970 UPDATED 1990 & 2020, (O.S.H.A.)
THE CONTRACTOR IS REQUIRED TO PROMPTLY PERFORM ALL REPORTING AND RECORDING AS REQUIRED BY SAID ACT.

SEE CURRENT REGULATIONS / STANDARDS FOR CONSTRUCTION (29 CFR / PART 1926) WWW.OSHA.GOV

© 2022 LDL STUDIO INC.

GREEN GOALS LDL STUDIO

ARCHITECT OF RECORD:
LDL STUDIO
ARCHITECT / HOSPITALITY DESIGNER
LDL STUDIO, INC.
106 Putnam Street
Providence, RI 02909
P: 401.274.4516
F. 401.421.2631
www.ldlstudio.com
Architect of Record: Gary M. Lepore, AIA

CERTIFICATION:
GARY M. LEPORE No. 2750 REGISTERED ARCHITECT

CONSULTANTS:
M/E/P & FP ENGINEER:
HP ENGINEERING CONSULTING ENGINEERS, P.C.
15 MAIDEN LANE
NORTH HAVEN, CT
P: 203-239-9425
JOHN PHILLIPS, P.E.

STRUCTURAL ENGINEER:
AMR ENGINEERING INC.
82 SCENIC DRIVE
WEST WARWICK , RI 02893
P: 401.559.3659
ANTHONY ROTONDO, P.E.

OWNER:
ROGER WILLIAMS PARK ZOO
RHODE ISLAND ZOOLOGICAL ASSOC. FOR THE ROGER WILLIAMS PARK ZOO
1000 ELMWOOD AVENUE
PROVIDENCE
RHODE ISLAND 02907

NUMBER	DATE	DESCRIPTION

REVISIONS:

PROJECT NAME:
RED PANDA EXHIBIT
RWPZ
1000 ELMWOOD AVENUE
PROVIDENCE
RHODE ISLAND 02907

SUBMISSION TYPE: PERMIT SET

PROJECT TYPE: NEW CONSTRUCTION

CLIENT NUMBER: RWPZ 2022_01

ISSUE DATE: NOVEMBER 14, 2022

SHEET NAME: GENERAL NOTES, SYMBOLS AND ABBREVIATIONS

DRAWING SCALE: NO SCALE

PROJECT NUMBER: 2022-03

DATE ISSUED: 11/14/2022

G1.1

SPECIFICATIONS AND GENERAL CONDITIONS

SECTION 01100 - SUMMARY
PART 1 - GENERAL CONDITIONS

A. RELATED DOCUMENTS

1. Drawings and general provisions of the Contract, including General and Supplementary Conditions and other Division 1 Specification Sections, apply to this Section.

2. AIA Document A201-2017, "General conditions of the contract for construction" shall apply to these contract documents and/or instruments of service unless revised or altered in authorized contract conditions between owner and contractor.

B. WORK COVERED BY CONTRACT DOCUMENTS

1. RED PANDA EXHIBIT
   a. Project Location: 1000 Elmwood Avenue, Providence, RI 02907
   b. Owner: RHODE ISLAND ZOO LOGICAL ASSOC.
      FOR THE ROGER WILLIAMS PARK ZOO
   c. Architect Identification: Permit set, dated 11/14/2022
   d. Architect: LDL Studio Inc.,
      106 Putnam Street, Providence, Rhode Island, 02909
      Telephone: 401.274.4516
      www.ldlstudio.com
2. THE WORK INCLUDES: Project is a new construction of an indoor exhibit and 3 holding rooms for red panda.

3. The Project : is the total construction of which the work performed under the Contract Documents may be the whole or a part of which may include construction by the Owner and by Separate Contractors.
4. Instruments of Service : are the representations, in any medium of the expression now known or later developed, of the tangible and intangible creative work performed by the Architect and the Architect's Consultants under their respective professional service agreements. Instruments of Service may include, without limitations, studies, surveys, models, renderings, sketches, drawings, permit drawings, construction documents, specifications, schedules and any other similar materials. Some Instruments of Service, once sealed/stamped by Architect as official documents become part of the Contract Documents and maybe protected by Federal copyright laws and/or applicable State Laws or Regulations.

C. CONTRACT METHOD

1. The Project will be constructed under a general construction contract between owner and contractor. The Contractor shall sign a contract with the owner; either the Standard AIA form, A104 (2017) or another mutually agreed upon form. No Bid amounts will be divulged after the bidding process is complete. The Architect/Designer and owner will make a careful selection and be considerate of the lowest bidder. However, the owner will not be limited to the low bidder as the selected contractor or subcontractors.

D. WORK SEQUENCE

1. The Work shall be conducted in continuous phases.

E. USE OF PREMISES

1. General: The Contractor shall daily coordinate the work schedules to complete THE WORK as called for by the Owner and Instruments of service. The Contractor shall have limited use of premises for construction operations, including use of Project site, during the construction period only. Only the Owner's right to self-perform work or to retain other contractors on portions of Project limits contractor's use of premises. The Contractor shall confine operations at the site to areas permitted by applicable laws, statues, ordinances, codes and regulations and the Contractor documents. and shall not unreasonably encumber the site with materials and equipment
2. GC will receive regulations for use of premises during bid/negotiation phase. GC will identify cost implication to limited use of premises, if applicable on bid form.
3. The Contractor shall keep the premises and surrounding area free from accumulation of waster material and rubbish caused by operations under the contract. At the completion of THE WORK Contractor shall remove waste and rubbish, contractor's tools, construction equipment, machinery, and surplus material from and about the project.
4. The Contractor shall purchase and maintain insurance of the types and limits of liability, containing endorsements, and subject to the terms and conditions, as described in the Agreement or elsewhere in the Contract signed by Owner and Contractor. The Contractor shall purchase and maintain the required insurance from an insurance company or companies lawfully authorized to issue insurance in the jurisdiction where THE WORK is located. The Owner, Architect and Architect's consultants shall be named as additional insured under the Contractor's commercial general liability policy or otherwise described in the Contact. Contractors insurance policy (in good standing) will cover all work associated to project and provide coverage to protect all Owner's property and assets associated to location of project and use of premises.

F. COORDINATION OF EXISTING CONDITIONS

1. The Contractor is to furnish all required permits related to the construction of the above project not obtained by the Owner. Design and construction is in accordance with and shall conform to all governing applicable / current Building Codes, ANSI 117.1 (applicable edition) Accessible and Usable Buildings and Facilities, 2010 ADA Standards for Accessible Design, applicable / current Fire and Life Saftey (NFPA 101) Codes and any ALL applicable local codes and/or ordinances required by Local Authorites having Jurisdicaiton. The Contractor is to familiarize him/herself with the existing conditions on site prior to submission of his/her bid for the work shown. Instruments of Service indicate the intended result. Miscellaneous blocking, cutting, patching or other work not indicated but required to complete all the work as shown in the responsibility of the Contractor.

G. PROJECT PREVIEW MEETING

1. Review of the plans and the Owner/Architect's intentions will be made will be made with the Owner, Contractor and Architect prior to contract signing to insure that the contract documents are understood by all parties. The Contractor shall submit the following items for review at the Project Preview Meeting:

   a. A list of the major trades involved in the project and the dollar value of each. This list shall be compiled using the "continuation sheet", AIA #G703 and will accompany each Application for Payment.
   b. A list of any material which the Contractor proposes as a substitute for those specified in the Contract Documents. The Contractor shall send a letter to the Owner indicating that the review of the Contract Documents has not changed the Contractor's bid quotation, that the bid is completely representative of all aspects of the contract documents and that the Contractor's questions concerning the Contract Documents have been answered by the Owner, Architect and/or Engineers involved in the work.

H. NOTIFICATION OF DANGEROUS CONDITIONS

1. The Contractor shall verify all the dimensions and the conditions on the job and shall bring any and all discrepancies to the attention of the Owner and/or Architect prior to the start of the work. The Contractor shall notify the Owner and Architect of all discrepancies when unanticipated or apparently dangerous conditions are uncovered during the course of work. The Contractor shall clean-up and leave the project site in a clean workmanlike condition prior to leaving the site each day. Final cleaning to be performed prior to inspection for final completion of the work. The Contractor shall maintain a complete set of these drawings and specifications (Project Record Documents) on-site for the duration of the project. All changes made, for any reason communicated by any means shall be recorded with copies made available to the Owner and/or Architect upon request.

I. CONTRACT CLOSEOUT PROCEDURES

1. Submit written certification that Contract Documents have been reviewed, the work has been inspected and that the work is complete in accordance with the Contract Documents and is ready for the Architects review and punchlist inspection. It is the General Contractors responsibility to complete the work prior to this review.
2. Though the Architect may review certain portions of the work prior to completion as a courtesy to the General Contractor, the Architect is not bound by items discussed prior to completion and the Architect reserves the right to wait for completion as described in item 1.1 above before conducting any review.
3. Submit final application for payment identifying total adjusted Contract Sum, previous payments and sum remaining due.

J. FINAL CLEANING

1. Execute final cleaning prior to final inspection.
2. Clean interior and exterior glass and surfaces exposed to view; remove temporary labels, stains and foreign substances, polish transparent and glossy surfaces, vacuum carpeted and soft surfaces. Clean debris from roofs, drainage systems, window sills, projections, etc. Clean project site; sweep paved areas, rake clean landscaped surfaces as applicable. Remove waste and surplus materials, rubbish and construction facilities from site, as applicable. Recycle all materials to a certified recycling program that is permitted in project location.

K. WARRANTIES

1. Provide duplicate notarized copies to owner upon completion of the work.
2. Execute and assemble documents from Subcontractors, suppliers and manufacturers.
3. Submit prior to final Application for Payment.
4. For items of work delayed beyond date of Substantial Completion, provide updated submittal within ten (10) days after acceptance, listing date of acceptance as start of Warranty period.

L. PROJECT RECORD DOCUMENTS

1. Maintain on-site, and/or on an Internet based file share platform one set of the following "conformed" record documents ("conformed" documents include actual revisions to the Work):

   a. Contract Drawings / Instruments of service
   b. Specifications (if applicable)
   c. Addenda
   d. Change Orders and other Modifications to the Contract.
   e. Reviewed Shop Drawings, product data and samples.

M. OWNER-FURNISHED PRODUCTS

1. Owner will furnish products identified in all instruments of service and / or schedules under drawing documents indicated as FURNISHED BY OWNER. The Work under this contract will include (when identified) equipment and all support systems to receive Owner's equipment and plumbing, mechanical, and electrical connections. GC to coordinate installation.

   a. Owner will arrange for and deliver Shop Drawings, Product Data, and Samples to Contractor if required.
   b. Owner will arrange and pay for delivery of Owner-furnished items according to Contractor's Construction Schedule.
   c. After delivery, Owner will inspect delivered items for damage. Contractor shall be present for and assist in Owner's inspection.
   d. If Owner-furnished items are damaged, defective, or missing, Owner will arrange for replacement.
   e. Owner will arrange for manufacturer's field services and for delivery of manufacturer's warranties to Contractor.
   f. Owner will provide "Owner-furnished products" to the Contractor at the Project Site at the earliest possible delivery date. Using earliest possible delivery dates, Contractor shall designate delivery dates of Owner-furnished items in Contractor's Construction Schedule.
   g. Contractor shall review Shop Drawings, Product Data, and Samples and return them to Architect noting discrepancies or anticipated problems in use of product.
   h. Contractor is responsible for receiving, unloading, and handling Owner-furnished items at Project site.
   i. Contractor is responsible for protecting Owner-furnished items from damage during storage and handling, including damage from exposure to the elements.
   j. If Owner-furnished items are damaged as a result of Contractor's operations, Contractor shall repair or replace them at no cost to the Owner and/or Architect.

N. SPECIFICATION / DRAWING FORMATS AND CONVENTIONS

1. Specification / Drawing Content: The Specifications / Drawings use certain conventions for the style of language and the intended meaning of certain terms, words, and phrases when used in particular situations. These conventions are as follows:

   a. Abbreviated Language: Language used in the Specifications and other Contract Documents may be abbreviated. Words and meanings shall be interpreted as appropriate. and as noted in the abbreviations on sheet A0.0. Words implied, but not stated, shall be inferred as the sense requires. Singular words shall be interpreted as plural, and plural words shall be interpreted as singular where applicable as the context of the Contract Documents indicates.
   b. Imperative and streamlined language are generally used throughout the Architectural portion of the Construction Documents. Requirements expressed in the imperative are to be performed by Contractor. Occasionally, the indicative or subjunctive mood may be used for clarity to describe responsibilities that must be fulfilled by the Contractor, or others when so designated.

O. FIELD SUPERVISION

1. The General Contractor shall provide field engineering services; establish grades, lines, and levels, by use of recognized engineering survey practices where necessary. The General Contractor shall have a skilled superintendent on the project at all times throughout the term of the contract. The superintendent shall keep all drawings, shop drawings and manufacturer's literature pertaining to the project on file at the job site for reference at all times.

P. BONDING AND INSURANCE

1. During the term of the contract, the General Contractor and all Sub-Contractors shall, at their own expense, purchase and maintain the proper insurance , as stated below, in companies properly licensed and acceptable to the owner. The General Contractor shall provide a Certificate of Insurance for the amount(s) as stated below.
2. The Contractor agrees that all certificates of insurance will be filed with the Owner, Landlord and Architect prior to the commencement of any work. All certificates must be on an occurrence form with insurance carrier rating of no less than A- VIII from A.M. Best. The Contractor agrees to fully indemnify the landlord, Owner, Architect and Engineer for any and all costs which may be incurred as it relates to any claim occurrence that may arise from the work. ALL certificates must list Rhode Island Zoo Logical Assoc. for the Roger Williams Park Zoo. as additional insured's on the General Liability, Automobile Liability and Umbrella/Excess Liability policies.
3. Insurance Required: (below is minimum required, see contract for actual insured amount agreed to by all parties)

   a. Self Performing Work by TENANT (NOT OWNER) IF APPLICABLE:
      1) General Liability: $2,000,000 Per occurrence / $3,000,000 General Aggregate / $2,000,000 Personal Advertising Injury / $ 2,000,000 Products Completed Operations.
      2) Automobile Liability: $1,000,000 CLS for all owned, hired and scheduled vehicles.
      3) Umbrella Excess Liability: $ 3,000,000 per occurrence and in the aggregate.
      4) Workers Compensation: Statutory / Employers Liability:$2 ,000,000 Each Accident / $1,000,000 Disease Each Employee / $1,000,000 Disease Policy Limit.
      5) Builders Risk : Total Insurance Value of the Work in place which includes Hard and Soft Costs and 6 months of Business Interruption.

   b. General Contractor/Construction Manager shall carry the following coverage's / limits:
      1) General Liability: $2,000,000 Per occurrence / $3,000,000 General Aggregate / $2,000,000 Personal Advertising Injury / $1,000,000 Products Completed Operations.
      2) Automobile Liability: $1,000,000 CLS for all owned, hired and scheduled vehicles.
      3) Umbrella Excess Liability: $5,000,000 per occurrence and in the aggregate.
      4) Workers Compensation: Statutory / Employers Liability: $2,000,000 Each Accident / $1,000,000 Disease Each Employee / $1,000,000 Disease Policy Limit.
      5) Equipment Floater : Value for any all tools and equipment owned.

   c. Trade Subcontractors:
      1) General Liability: $2,000,000 Per occurrence / $2,000,000 General Aggregate / $2,000,000 Personal Advertising Injury / $2,000,000 Products Completed Operations.
      2) Automobile Liability: $1,000,000 CLS for all owned, hired and scheduled vehicles.
      3) Umbrella Excess Liability: $3,000,000 per occurrence and in the aggregate.
      4) Workers Compensation: Statutory / Employers Liability: $1,000,000 Each Accident / $1,000,000 Disease Each Employee / $1,000,000 Disease Policy Limit
      5) Equipment Floater : Value for any all tools and equipment owned.

PART 2 PRODUCTS

A. GENERAL

1. "Products" means new material, machinery, components, equipment, fixtures and systems forming the work. This does NOT include machinery and equipment used for preparation, fabrication, conveying and erection of the work. Products may also include existing materials or components required for reuse.
2. Do not use materials and equipment removed from the existing premises, except as specifically permitted by the Contract Documents.
3. Provide interchangeable components of the same manufacturer, for similar components.

B. PRODUCT DATA

1. The General Contractor shall submit data for all products specified. Submit electronic readable files (PDF Format) to be retained by the Architect, Engineer and Owner.
2. Mark each electronic file to identify applicable products, models, options and other such data. Supplement manufacturer's standard data to provide information unique to this project.
3. After review, distribute in accordance to Section 01330 Submittal/Review Procedures and provide electronic copies for Record Documents described in Contract Closeout.

PART 3 - EXECUTION (Not Used)

END OF SECTION

SECTION 01250 - CONTRACT MODIFICATION PROCEDURES

PART 1 - GENERAL

A. SUMMARY

1. This Section specifies administrative and procedural requirements for handling and processing Contract modifications.

B. MINOR CHANGES IN THE WORK

1. Architect will issue Bulletin and/or supplemental instructions authorizing Minor Changes in the Work, not involving adjustment to the Contract Sum or the Contract Time, on LDL Studio's standard Bulletin Form.

C. PROPOSAL REQUESTS

1. Owner-Initiated Proposal Requests: Architect will issue a detailed description of proposed changes in the Work that may require adjustment to the Contract Sum or the Contract Time. If necessary, the description will include supplemental or revised Drawings and Specifications.
   a. Proposal Requests issued by Architect are for information only. Do not consider them instructions either to stop work in progress or to execute the proposed change.
   b. Within 10 DAYS after receipt of Proposal Request, submit a quotation estimating cost adjustments to the Contract Sum and the Contract Time necessary to execute the change.
      i. Include a list of quantities of products required or eliminated and unit costs, with total amount of purchases and credits to be made. If requested, furnish survey data to substantiate quantities.
      ii. Indicate applicable taxes, delivery charges, equipment rental, and amounts of trade discounts.
      iii. Include an updated Contractor's Construction Schedule that indicates the effect of the change, including, but not limited to, changes in activity duration, start and finish times, and activity relationship. Use available total float before requesting an extension of the Contract Time.
2. Contractor-Initiated Proposals: If latent or unforeseen conditions require modifications to the Contract, Contractor may propose changes by submitting a request for a change

   a. Include a statement outlining reasons for the change and the effect of the change on the Work. Provide a complete description of the proposed change. Indicate the effect of the proposed change on the Contract Sum and the Contract Time.
   b. Include a list of quantities of products required or eliminated and unit costs, with total amount of purchases and credits to be made. If requested, furnish survey data to substantiate quantities.
   c. Indicate applicable taxes, delivery charges, equipment rental, and amounts of trade discounts.
   d. Furnish an updated Contractor's Construction Schedule that indicates the effect of the change, including, but not limited to, changes in activity duration, start and finish times, and activity relationship. Use available total float before requesting an extension of the Contract Time.
   e. Comply with requirements in Division 1 Section "Product Requirements" if the proposed change requires substitution of one product or system for product or system specified.
3. Proposal Request Form: Use AIA Document G709 for Proposal Requests or Similar Format

D. ALLOWANCES

1. Allowance Adjustment: To adjust allowance amounts, base each Change Order proposal on the difference between purchase amount and the allowance, multiplied by final measurement of work-in-place. If applicable, include reasonable allowances for cutting losses, tolerances, mixing wastes, normal product imperfections, and similar margins.

   a. Include installation costs in purchase amount only where indicated as part of the allowance.
   b. If requested, prepare explanation and documentation to substantiate distribution of overhead costs and other margins claimed.
   c. Submit substantiation of a change in scope of work, if any, claimed in Change Orders related to unit-cost allowances.
   d. Owner reserves the right to establish the quantity of work-in-place by independent quantity survey, measure, or count.

E. Contractor may submit claims for increased costs because of a change in scope or nature of the allowance described in the Contract Documents, whether for the Purchase Order amount or Contractor's handling, labor, installation, overhead, and profit, within 15 days of receipt of the Change Order or Construction Change Directive authorizing work to proceed. Owner will reject claims submitted later than 21 days after such authorization.

1. Do not include Contractor's or subcontractor's indirect expense in the Change Order cost amount unless it is clearly shown that the nature or extent of work has changed from what could have been foreseen from information in the Contract Documents.
2. No change to Contractor's indirect expense is permitted for selection of higher- or lower-priced materials or systems of the same scope and nature as originally indicated.

1.5 CHANGE ORDER PROCEDURES

A. On Owner's approval of a Proposal Request, Architect will issue a Change Order for signatures of Owner and Contractor on AIA Document G701-2017 or Project approved format

1.6 CONSTRUCTION CHANGE DIRECTIVE

A. Construction Change Directive: Architect may issue a Construction Change Directive on AIA Document G714. or Project approved format / LDL Studio standard Bulletin indicating Construction Change Directive instructs Contractor to proceed with a change in the Work, for subsequent inclusion in a Change Order.

1. Construction Change Directive contains a complete description of change in the Work. It also designates method to be followed to determine change in the Contract Sum or the Contract Time.

B. Documentation: Maintain detailed records on a time and material basis of work required by the Construction Change Directive.

1. After completion of change, submit an itemized account and supporting data necessary to substantiate cost and time adjustments to the Contract.

PART 2 - PRODUCTS (Not Used)
PART 3 - EXECUTION (Not Used)

END OF SECTION 01250

SECTION 01230 - ALTERNATES / SUBSTITUTIONS

PART 1 - GENERAL

1.1 RELATED DOCUMENTS

A. Drawings, Instruments of Service and general provisions of the Contract, including General and Supplementary Conditions and other Division 1 Specification Sections, as provided on sheets A0.1 through 0.3, apply to this Section.

1.2 SUMMARY

A. This Section includes administrative and procedural requirements for alternates and PART 2 - procedural requirements for substitutions to specified fixtures, finishes and items identified in all drawings and schedules.

1.3 DEFINITIONS

A. Alternate: A option and or amount proposed by Contract Documents and stated on the Bid Form for certain work defined as and Add and/or Deduct Alternate or in the Bidding Requirements that may be added to or deducted from the Base Bid amount if Owner decides to accept a corresponding change either in the amount of construction to be completed or in the products, materials, equipment, systems, or installation methods described in the Contract Documents.

1. The cost or credit for each alternate is the net addition to or deduction from the Contract Sum to incorporate alternate into the Work. No other adjustments are made to the Contract Sum.

1.4 PROCEDURES

A. Coordination: Modify or adjust affected adjacent work as necessary to completely integrate work of the alternate into Project.

1. Include as part of each alternate, miscellaneous devices, accessory objects, and similar items incidental to or required for a complete installation whether or not indicated as part of alternate.

B. Notification: Immediately following award of the Contract, notify each party involved, in writing, of the status of each alternate. Indicate if alternates have been accepted, rejected, or deferred for later consideration. Include a complete description of negotiated modifications to alternates.

C. Execute accepted alternates under the same conditions as other work of the Contract.

D. Schedule: A Schedule of Alternates is included at the end of this Section. Specification Sections referenced in schedule contain requirements for materials necessary to achieve the work described under each alternate.

PART 2 - SUBSTITUTIONS

2.1 CONSIDERATION OF SUBSTITUTIONS

A. The Architect will consider requests for substitutions prior to the submission of bid.

B. Substitution Submittal Procedure:
   1) Submit digital / electronic readable formatted request for Substitution for consideration. Limit each request to one proposed substitution.
   2) Submit shop drawings, product data and certified test results attesting to the proposed products' equivalence.
   3) The request for substitution must include reason for substitution, or it will not be accepted.
   4) The Architect/Engineer will notify the Contractor, in writing of their decision to accept or reject the substitution request within two business weeks.
   5) If a Substitution is approved during Bidding, All Bidding Contractors will be notified of the approved Substitution as part of the overall bid process

C. Substitutions will be considered during construction when a Product and/or Fabrication becomes unavailable through no fault of the Contractor. The Contractor will notify Architect and Owner in writing if he/she has been directed to or wishes to make a substitution to any material or item identified in drawings, instruments of service or in specification and/or schedules.

D. The Contractor will not substitute a material or item identified on Instruments of Service for another material under any circumstances without first notifying Architect in writing. Notification will include a description of new material including manufacturers information, reason for substitution, impact on construction cost and construction schedule. The Architect will review requested substitution and notify Contractor within 3 business days of receipt of written request if substitution is accepted. this requirement of notification includes substitutions directed by owner to contractor.

E. Substitutions will not be considered when the are indicated or implied on shop drawings or product data submittals without a separate written request or when acceptance will require revision to the Contract Documents.

F. Failure to notify Architect with Substitution request and/ or Substitution without Architects knowledge or approval will result in the following action:

   1) Contractor will pay a sum of $ 1,500.00 dollars to a non-profit/ and or charity chosen by ARCHITECT for each infraction or substitution not submitted to Architect for review / approval and/or a substitution not known by Architect but discovered during project progress or after project close-out for a period of 1 year after substantial completion.
   2) Architect will direct owner in writing of infraction and request deduction of said amount from contract sum and or require independent payment from Contractor to Owner. Owner will issue payment to non-profit and/or charity on behalf of project.
   3) Owner and Contractor will be identified as Donor/ Contributor to the non-profit / Charity
   4) Contractor is permitted to remove, replace or substitute infraction with Approved substitution at no addition cost to project and or change in approved project schedule in lieu of payment
   5) Contractor is prohibited from submitting a Change Order to project to recover partial or full monies back to Contractor to cover cost of the infraction.
   6) Contractor accepts these terms as part of these contract documents and agrees to terms.

G. Contractor shall document each substitution request with complete data substantiating compliance of proposed substitution with design intent as indicated by the Contract Documents.

H. A substitution request constitutes a representation that the Contractor:

   1) Will provide the same warranty for the substitution as for the specified product.
   2) Will coordinate installation and make changes to other work which may be required for the work to be complete with no additional cost to the Owner, Architect or Engineers.
   3) Waives claims for additional costs or time extension which may subsequently become apparent with a proposed substitution.

PART 3 - EXECUTION (Not Used)

END OF SECTION 01230

SECTION 1290 - PAYMENT PROCEDURES

PART 1 - GENERAL

1.1 SUMMARY

A. This Section specifies administrative and procedural requirements necessary to prepare and process Applications for Payment and /or Contractor's Invoicing.

B. The Owner shall make payments in the manner and within the time provided in the Contract Documents

1. Section 01250 "Contract Modification Procedures" for procedural requirements governing handling and processing of allowances and changes to the Contract Documents.

1.2 DEFINITIONS

A. Schedule of Values: A statement furnished by Contractor allocating portions of the Contract Sum to various portions of the Work and used as the basis for reviewing Contractor's Applications for Payment.

B. Contractor is required to provide Owner and Architect at Kick off meeting an example of Contractors Application and Certification for Payment / Invoice Structure to identify Contractors means to determine his/her percentage of completion of THE WORK and Schedule of Values

1.3 SCHEDULE OF VALUES

A. Coordination: Coordinate preparation of the Schedule of Values with preparation of Contractor's Construction Schedule.

1. Correlate line items in the Schedule of Values with other required administrative forms and schedules, including the following:
   a. Application for Payment forms with Continuation Sheets.
   b. Submittals Schedule.
2. Submit the Schedule of Values to Architect at earliest possible date but no later than seven days before the date scheduled for submittal of initial Applications for Payment.
3. Sub-Schedules: Where the Work is separated into phases requiring separately phased payments, provide sub-schedules showing values correlated with each phase of payment.

© 2022 LDL STUDIO INC.

IF THIS SHEET IS NOT 24 X 36 IT IS A REDUCED SCALE PRINT - SCALE ACCORDINGLY
WWW.LDLSTUDIO.COM LDL STUDIO INC. - CELEBRATING 27 YEARS OF AWARD WINNING SERVICE 1995 - 2022 ARCHITECTS AIA 2030 CHALLENGE ADOPTER

ARCHITECT OF RECORD:
LDL STUDIO
ARCHITECT / HOSPITALITY DESIGNER
LDL STUDIO, INC.
106 Putnam Street
Providence, RI 02909
P: 401.274.4516
F. 401.421.2631
www.ldlstudio.com
Architect of Record: Gary M. Lepore, AIA

CERTIFICATION:
GARY M. LEPORE
REGISTERED ARCHITECT

CONSULTANTS:
M/E/P & FP ENGINEER:
HP ENGINEERING CONSULTING ENGINEERS, P.C.
15 MAIDEN LANE
NORTH HAVEN, CT
P: 203-239-9425
JOHN PHILLIPS, P.E.

STRUCTURAL ENGINEER:
AMP ENGINEERING INC.
82 SCENIC DRIVE
WEST WARWICK , RI 02893
P: 401.559.3659
ANTHONY ROTONDO, P.E.

OWNER:
ROGER WILLIAMS PARK ZOO
RHODE ISLAND ZOOLOGICAL ASSOC.
FOR THE ROGER WILLIAMS PARK ZOO
1000 ELMWOOD AVENUE
PROVIDENCE
RHODE ISLAND 02907

NUMBER	DATE	DESCRIPTION

REVISIONS:

PROJECT NAME:
RED PANDA EXHIBIT
RWPZ
1000 ELMWOOD AVENUE
PROVIDENCE
RHODE ISLAND 02907

SUBMISSION TYPE:
PERMIT SET

PROJECT TYPE:
NEW CONSTRUCTION

CLIENT NUMBER:
RWPZ 2022_01

ISSUE DATE: NOVEMBER 14, 2022

SHEET NAME:
SPECIFICATIONS AND GENERAL NOTES

DRAWING SCALE:

PROJECT NUMBER
2022-03

DATE ISSUED
11/14/2022

G1.2

SPECIFICATIONS AND GENERAL CONDITIONS (CONTINUED)

B. Format and Content: Establish line items for the Schedule of Values. Provide at least one line item for each Specification Section accounted for in the Contract Documents.

1. Identification: Include the following Project identification information on the Schedule of Values:
   a. Project name and location.
   b. Name of Architect.
   c. Architect's project number.
   d. Contractor's name and address.
   e. Date of submittal.
2. Arrange the Schedule of Values in tabular form with separate columns to indicate the following for each item listed:
   a. Related Specification Section or Division.
   b. Description of the Work.
   c. Name of subcontractor.
   d. Name of manufacturer or fabricator.
   e. Name of supplier.
   f. Change Orders (numbers) that affect value.
   g. Dollar value.
      i) Percentage of the Contract Sum to nearest one-hundredth percent, adjusted to total 100 percent.
3. Provide a breakdown of the Contract Sum in enough detail to facilitate continued evaluation of Applications for Payment and progress. reports. Coordinate with the Project Manual table of contents. Provide several line items for principal subcontract amounts, where appropriate.
4. Round amounts to nearest whole dollar; total shall equal the Contract Sum.
5. Provide a separate line item in the Schedule of Values for each part of the Work where Applications for Payment may include materials or equipment purchased or fabricated and stored, but not yet installed.
   a. Differentiate between items stored on-site and items stored off-site. Include evidence of insurance or bonded warehousing if required
6. Provide separate line items in the Schedule of Values for initial cost of materials, for each subsequent stage of completion, and for total installed value of that part of the Work.
7. Allowances: Provide a separate line item in the Schedule of Values for each allowance. Show line-item value of unit-cost allowances, as a product of the unit cost, multiplied by measured quantity. Use information indicated in the Contract Documents to determine quantities.
8. Each item in the Schedule of Values and Applications for Payment shall be complete. Include total cost and proportionate share of general overhead and profit for each item.
   a. Temporary facilities and other major cost items that are not direct cost of actual work-in-place may be shown either as separate line items in the Schedule of Values or distributed as general overhead expense, at Contractor's option.
9. Schedule Updating: Update and resubmit the Schedule of Values before the next Applications for Payment when Change Orders or Construction Change Directives result in a change in the Contract Sum.

1.4 APPLICATIONS FOR PAYMENT

A. Each Application for Payment shall be consistent with previous applications and payments as certified by Architect and paid for by Owner.

1. Initial Application for Payment, Application for Payment at time of Substantial Completion, and final Application for Payment involve additional requirements.

B. Payment Application Times: The date for each progress payment is indicated in the Agreement between Owner and Contractor. The period of construction Work covered by each Application for Payment is the period indicated in the Agreement.

C. Payment Application Forms: Use AIA Document G702 and AIA Document G703 Continuation Sheets or Project approved Format.

D. Application Preparation: Complete every entry on form. Notarize and execute by a person authorized to sign legal documents on behalf of Contractor. The Architect will return incomplete applications without action.

1. Entries shall match data on the Schedule of Values and Contractor's Construction Schedule. Use updated schedules if revisions were made.
2. Include amounts of Change Orders and Construction Change Directives issued before last day of construction period covered by application.

E. Transmittal: Submit digital / electronic readable format of Application for Payment to Architect by a method ensuring receipt. Contractor to include waivers of Mechanics Lien and similar attachments if required by Contract Documents.

1. Contractor to provide digital / electronic readable transmittal form listing attachments and recording appropriate information about application. Each Applications for Payment shall be sequentially numbered so Architect and Owner may reference previous application by Identifications Number

F. Waivers of Mechanic's Lien: With each Application for Payment, submit waivers of mechanic's lien from the subcontractors, sub-subcontractors, suppliers and every other entity who is lawfully entitled to file a mechanic's lien arising out of the Contract and related to the Work covered by the previous application for payment.

1. Submit partial waivers on each item for amount requested, before deduction for retaking, on each item.
2. When an application shows completion of an item, submit final or full waivers.
3. Owner reserves the right to designate which entities involved in the Work must submit waivers.
4. Submit final Application for Payment with or preceded by final waivers from every entity involved with performance of the Work covered by the application who is lawfully entitled to a lien.
5. Waiver Forms: Submit waivers of lien on forms, executed in a manner acceptable to Owner.

G. Initial Application for Payment: Administrative actions and submittals that must precede or coincide with submittal of first Application for Payment include the following:

1. List of subcontractors.
2. Schedule of Values.
3. Contractor's Construction Schedule (preliminary if not final).
4. Products list.
5. Schedule of unit prices.
6. Submittals Schedule (preliminary if not final).
7. List of Contractor's staff assignments.
8. List of Contractor's principal consultants.
9. Copies of building permits.
10. Copies of authorizations and licenses from authorities having jurisdiction for performance of the Work.
11. Initial progress report.
12. Report of pre-construction conference.
13. Certificates of insurance and insurance policies.
14. Performance and payment bonds.
15. Data needed to acquire Owner's insurance.
16. Initial settlement survey and damage report if required.

H. Application for Payment at Substantial Completion: After issuing the Certificate of Substantial Completion, submit an Application for Payment showing 100 percent completion for portion of the Work claimed as substantially complete.

1. include documentation supporting claim that the Work is substantially complete and a statement showing an accounting of changes to the Contract Sum.
2. This application shall reflect Certificates of Partial Substantial Completion issued previously for Owner occupancy of designated portions of the Work.

I. Final Payment Application: Submit final Application for Payment with releases and supporting documentation not previously submitted and accepted, including, but not limited, to the following:

1. Evidence of completion of Project closeout requirements.
2. Insurance certificates for products and completed operations where required and proof that taxes, fees, and similar obligations were paid.
3. Updated final statement, accounting for final changes to the Contract Sum.
4. AIA Document G706, "Contractor's Affidavit of Payment of Debts and Claims."
5. AIA Document G706A, "Contractor's Affidavit of Release of Liens."
6. AIA Document G707, "Consent of Surety to Final Payment."
7. Evidence that claims have been settled.

8. Final meter readings for utilities, a measured record of stored fuel, and similar data as of date of Substantial Completion or when Owner took possession of and assumed responsibility for corresponding elements of the work.
9. Final, liquidated damages settlement statement.

PART 2 - PRODUCTS (Not Used)
PART 3 - EXECUTION (Not Used)

END OF SECTION 01290

SECTION 01310 - PROJECT MANAGEMENT AND COORDINATION

PART 1 - GENERAL

1.1 RELATED DOCUMENTS

A. Drawings , Instruments of service. AIA A201-2017 "General Conditions of the Contract for Constriction" and general provisions of the Contract, including General and Supplementary Conditions and other Division 1 Specification Sections as stated, apply to this section.

1.2 SUMMARY

A. This Section includes administrative provisions for coordinating construction operations on project including, but not limited to, the following:

B. The General Contractor and each Sub-Contractor shall participate in coordination requirements. Certain areas of responsibility will be assigned to a specific contracting entities.

C. Related Sections: The following Sections of AIA 201 - 2017 contain requirements that relate to this section and should be incorporated into terms of this scope of work

1. Division 1, Section "Summary of Multiple Contracts" for a description of the division of Work among separate contracts and responsibility for coordination activities not in this Section.
2. Division 1, Section "Construction Progress Documentation" for preparing and submitting the Contractor's construction schedule.
3. Division 1,Section "Execution Requirements" for procedures for coordinating general installation and field-engineering services, including establishment of benchmarks and control points.
4. Division 1 ,Section "Closeout Procedures" for coordinating Contract closeout.

1.3 COORDINATION

A. Coordination: Coordinate construction operations included in various Sections of the Specifications to ensure efficient and orderly installation of each part of the Work. Coordinate construction operations, included in different Sections, that depend on each other for proper installation, connection, and operation.

B. Coordination: The Contractor and Sub-Contractors shall coordinate their construction operations with those of other contractors and entities to ensure efficient and orderly installation of each part of the Work. Each shall coordinate its operations, included in different sections, that depend on each other for proper installation, connection, and operation.

1. Where conflicts occur with placement of materials of various trades, the Contractor and Sub-Contractors shall be responsible to coordinate the available space to accommodate all trades. Items of impossibility or requests for variances shall be called to the Architect's attention by the General Contractor for resolution.
2. Schedule construction operations in sequence required to obtain the best results where installation of one part of the work depends on installation of other components, before or after its own installation.
3. Coordinate installation of different components with other contractors to ensure maximum accessibility for required maintenance, service, and repair.
4. Make adequate provisions to accommodate items scheduled for later installation.

C. If necessary, prepare memoranda for distribution to each party involved, outlining special procedures required for coordination. Include such items as required notices, reports, and list of attendees at meetings.

1. Prepare similar memoranda for Owner and separate contractors if coordination of their work is required.

D. Administrative Procedures: Coordinate scheduling and timing of required administrative procedures with other construction activities and activities of other Sub-Contractors to avoid conflicts and to ensure orderly progress of the work. Such administrative activities include, but are not limited to, the following:

1. Preparation of Contractor's Construction Schedule.
2. Preparation of the Schedule of Values.
3. Installation and removal of temporary facilities and controls.
4. Delivery and processing of submittals.
5. Progress meetings. Contractor will submit a schedule of meetings both with Owner and Architect and separate meetings with all trades, sub-contractors, sub-sub contractors fabricators and suppliers during construction schedule to Owner & Architect to review progress of project and construction scope. these meetings will included agenda to review Safety procedure for project site and work. In addition, progress meetings will include review of projects action/ task to be environmentally sensitive , recycle, reduce carbon-footprint, reduce waste and provide means and methods to complete THE WORK with minimal environmental impact.
6. pre-installation conferences.
7. Project closeout activities.

E. Conservation: Coordinate construction activities to ensure that operations are carried out with consideration given to conservation of energy, water, and materials. Contractor , Sub-Contractors, Fabricators and Suppliers should consider Environmental sensitivity and reducing impact on environment, reducing carbon footprint, recycling, reducing waste and provide means and methods to complete THE WORK with minimal environmental impact.
1. Salvage materials and equipment involved in performance of, but not actually incorporated into, the Work.

F. After the work of all trades has been recorded, a meeting will be held to insure that no conflicts exist between the trades.

G. All Contractors, Sub-Contractor, Sub-sub contractors, fabricators, suppliers shall be required to provide Project / Owner with memoranda outlining their firms approach to complete THE WORK with methods and means that reduce environmental impact, reduce carbon foot-print, recycle, provide materials and methods of fabrication that reduce waste, are environmentally sensitive and provide a strategy and method that meets project / Owners goal to be responsible and sensitive to surrounding environment.

1.4 CONSTRUCTION FACILITIES, TEMPORARY CONTROLS AND BARRIERS

1. Provide barriers to prevent unauthorized entry to construction area to allow Owners access and to protect existing facilities and adjacent spaces from damage due to construction related operations.
2. Furnish, install, maintain aids and equipment required by personnel to facilitate execution of the work. These may include, but are not limited to scaffolds, staging, ladders, stairs, ramps, railings, aerial lifts, hoists and other such facilities and equipment deemed necessary to the completion of the work.
   a. If scaffolding is provided, provide construction pipe staging following Scaffolding Safety Rules as recommended by the Scaffolding Shoring and Forming Institute, Inc. and OSHA rules and regulations.
   b. The scaffolding shall have internal stair for access to all levels of the work.
   c. The Contractor is responsible for repair of any surfaces damaged by the scaffolding tie backs, repointing all holes in masonry due to tie backs and any other damages to the existing building.
   d. The scaffolding shall be protected from unauthorized access as applicable. This protection shall consist of an eight (8) foot high commercial grade chain link fence secured to the scaffolding. Provide access to the scaffolding as required to perform the work in the form of locked gates properly sized for required materials, equipment, workers etc.
3. Protect non-owned vehicular traffic, stored materials, site and structure from damage.
4. Coordinate with officials to insure the general safety of individuals from falling debris, restoration chemicals and other construction related hazards.
5. Provide barricades and covered walkways as required by governing authorities for public right-of-way and for public access to existing building if needed.

1.5 PROTECTION OF EXISTING AND INSTALLED WORK

A. Protect installed work. Provide temporary and removable protection for installed products. Control activity in immediate work area to minimize potential damage to these areas.

B. Provide protective coverings at walls, projections, jambs, sills and soffits of openings as applicable.

C. Temporarily install durable sheet material as protect ion for finished floors, stairs and other surfaces from traffic, dirt, wear, damage or movement of heavy objects.

1.6 TEMPORARY SANITARY FACILITIES

A. To be provided by the General Contractor

1.7 PROGRESS CLEANING

A. Maintain areas free of waste materials, debris and rubbish. maintain site in a clean, orderly, workmanlike condition.

B. Remove and dispose of waste materials, debris and rubbish from the project site weekly.

1.8 ADMINISTRATIVE AND SUPERVISORY PERSONNEL

A. Staff Names: Within 5 days of starting construction operations, submit a list of principal staff assignments, including superintendent and other personnel in attendance at Project site. Identify individuals and their duties and responsibilities; list addresses and telephone numbers, including e-mail, mobile phone and office telephone numbers. Provide names, addresses, e-mail and telephone numbers of individuals assigned as standbys in the absence of individuals assigned to Project.

1. Post copies of staff list in temporary field office, and by each temporary telephone on project site

B. General: In addition to Project superintendent, provide other administrative and supervisory personnel as required for proper performance of the Work.

1. Include special personnel required for coordination of operations with other contractors.

C. If Required by Owner / Project Contractor may be require to provide proof of Vaccination of all staff and that of Sub-Contractors, Sub-subcontractors, fabricators, and suppliers to enter site / project area. Contractor is required to review all Owners protocols for working on project and working at site of THE WORK prior to commencement of project.

1.9 PROJECT MEETINGS

A. General: Schedule and conduct meetings and conferences at Project site, unless otherwise indicated.

1. Attendees: Inform participants and others involved, and individuals whose presence is required, of date and time of each meeting. Notify Owner and Architect of scheduled meeting dates and times.
2. Agenda: Prepare the meeting agenda. Distribute the agenda to all invited attendees. see
3. Minutes: The Contractor shall record significant discussions, disagreements, decisions and agreements achieved. Distribute the meeting minutes to everyone concerned, including Owner and Architect, within 3 days of the meeting.
4. Contractor to review Section 1.3 / # D / .5 and Section 1.3 # G for additional scope / agenda for Meetings

B. Pre-construction Conference: The Contractor shall schedule a pre-construction conference before starting construction, at a time convenient to the Owner and Architect, but no later than 5 days after execution of the Agreement. Hold the conference at Project site. Conduct the meeting to document the existing conditions and to review responsibilities and personnel assignments.

1. The Contractor is responsible to for returning the site and surrounding structure elements outside of the project limit line to their condition prior to the start of work.
2. Attendees: Authorized representatives of Owner, Architect, and their consultants; Contractor and its superintendent; major subcontractors; manufacturers; suppliers; and other concerned parties shall attend the conference. All participants at the conference shall be familiar with Project and authorized to conclude matters relating to the Work.
3. Agenda: Discuss items of significance that could affect progress, including the following:
   a. Tentative construction schedule.
   b. Phasing.
   c. Critical work sequencing.
   d. Designation of responsible personnel.
   e. Procedures for processing field decisions and Change Orders.
   f. Procedures for processing Applications for Payment.
   g. Distribution of the Contract Documents.
   h. Submittal procedures.
   i. Preparation of Record Documents.
   j. Use of the premises.
   k. Responsibility for temporary facilities and controls.
   l. Parking availability.
   m. Office, work, and storage areas.
   n. Equipment deliveries and priorities.
   o. First aid / Safety
   p. Security
   q. Environmental Sensitivity , means and methods to reduce environment impact
   r. Progress cleaning.
   s. Working hours.
4. Do not proceed with construction if the conference cannot be successfully concluded. The Contractor shall Initiate whatever actions are necessary to resolve impediments to performance of the work and reconvene the conference at earliest feasible date.

C. Progress Meetings: The Contractor shall schedule and conduct progress meetings at regular intervals as determined by the needs of the project and by the project team. The Contractor shall coordinate the dates of meetings with preparation of payment requests.

1. Attendees: In addition to representatives of Owner and Architect, each contractor, subcontractor, supplier, and other entity concerned with current progress or involved in planning, coordination, or performance of future activities shall be represented at these meetings. All participants at the conference shall be familiar with Project and authorized to conclude matters relating to the work.
2. Agenda: Review and correct or approve minutes of previous progress meeting. Review other items of significance that could affect progress. Include topics for discussion as appropriate to status of Project.
   a. Contractor's Construction Schedule: Review progress since the last meeting. Determine whether each activity is on time, ahead of schedule, or behind schedule, in relation to Contractor's Construction Schedule. Determine how construction behind schedule will be expedited; secure commitments from parties involved to do so. Discuss whether schedule revisions are required to ensure that current and subsequent activities will be completed within the Contract Time.
   b. Revise Contractor's Construction Schedule after each progress meeting where revisions to the schedule have been made or recognized. Issue revised schedule concurrently with the report of each meeting.
   c. Review present and future needs of each entity present, including the following:
      1) Interface requirements.
      2) Sequence of operations.
      3) Status of submittals.
      4) Deliveries.
      5) Off-site fabrication.
      6) Access.
      7) Site utilization.
      8) Temporary facilities and controls.
      9) Environmental Sensitivity , means and methods to reduce environment impact
      10) Work hours.
      11) Hazards and risks.
      12) Progress cleaning.
      13) Quality and work standards.
      14) Change Orders.
      15) Documentation of information for payment requests.
   d. Reporting: The Contractor shall distribute minutes of the meeting to each party present and to parties who should have been present. Include a brief summary, in narrative form, of progress since the previous meeting and report.

PART 2 - PRODUCTS - (Not Used)
PART 3 - EXECUTION - (Not Used)

END OF SECTION 01310

SECTION 01330 - SUBMITTAL / REVIEW PROCEDURES

PART 1 - GENERAL

1.1 RELATED DOCUMENTS

A. Drawings, Instruments of Service and general provisions of the Contract, including AIA A201 - 2017, General and Supplementary Conditions and other Division Specification Sections, apply to this Section.

1.2 SUMMARY

A. This Section includes administrative and procedural requirements for submitting Shop Drawings, Product Data, Samples and other miscellaneous submittals and Architects procedural requirements for reviewing submission.

B. Related Sections: The following Sections of Contract Documents contain requirements that relate to this section and should be incorporated into terms of this scope of work

1. Division 1 Section 01290 "Payment Procedures" for submitting Applications for Payment.
2. Division 1 Section 01250 "Contract Modification Procedures" for crediting the Owner by Change Order for electronic copies of the Architect's drawings.
3. Division 1 Section 01310 "Project Management and Coordination" for submitting Coordination Drawings.
4. Division 1 Section 01230 "Alternates and Substitutions"

1.3 DEFINITIONS

A. Action Submittals: Written and graphic information that requires Architect's responsive action. Submittals may be rejected for not complying with requirements.

B. Informational Submittals: Written information that does not require Architect's approval.

1.4 SUBMITTAL PROCEDURES

A. General: Subject to the approval of the Owner, and Contractor's signature / approval of LDL Studio CAD Transfer Form the Architect will provide electronic copies of CAD drawings of the Contract Drawings for Contractor's use in preparing submittals. The CAD drawings will be transferred via e-mail and or an Internet file transfer website / platform. CAD drawings will be sent in LDL Studio current edition of CAD and or REVIT depending on the format LDL Studio is currently using for software for this project.

B. Coordination: The contractor shall coordinate preparation and processing of submittals with performance of construction activities.

1. The Contractor shall submit electronic / digital copies of each submittal within an e-mail or file transfer Internet or website platform. The electronic submittal will be furnished as a readable PDF format. Date of e-mail / file transfer will be used as date submittal was received by Architect.
2. Coordinate each submittal with fabrication, purchasing, testing, delivery, other submittals, and related activities that require sequential activity.
3. Coordinate transmittal of different types of submittals for related parts of the work so processing will not be delayed because of the need to review submittals concurrently for coordination.
   a. The Architect reserves the right to withhold action on a submittal requiring coordination with other submittals until related submittals are received.

C. Submittals / Shop drawings to be received in a readable format including but not limited to language : English and all dimensions to be in Imperial measurement system

D. Samples of all products are to be submitted for approval. Each sample will be identified as follows: Identify project Contractor, Subcontractor or supplier, pertinent drawing sheet and detail number(s) as appropriate.

E. Apply the Contractor's stamp, signed or initialed certifying that required review, verification of products, field dimensions, adjacent construction work and coordination of information is in accordance with the requirements of the work and Contract Documents.

F. Identify variations from the Contract Documents and product or system limitations which may be detrimental to the successful performance of the completed work.

G. Processing Time: Allow enough time for submittal review, including time for re-submittals as follows/ Time for review shall commence on Architect's receipt of submittal.

1. Initial Review: Allow seven (7) days for initial review of each submittal. Additional time will be required if processing must be delayed to permit coordination with subsequent submittals. The Architect will advise the Contractor when a submittal being processed must be delayed for coordination.
   a. Revise and resubmit submittals as required. Identify all changes made since previous submission.
2 . Concurrent Review: Where concurrent review of submittals by the Architect, the Architect's consultants, Owner or other parties is required, 15 business days for the initial review of each submittal.
3. Direct Transmittal to Consultant: Where the Contract Documents indicate that submittals may be transmitted directly to the Architect's consultants, the Contractor shall provide a duplicate copy of the transmittal to the Architect. The submittal will be returned to the Contractor through the Architect.
4. If an intermediate submittal is necessary, it shall be processed in the same manner as the initial submittal.
5. Allow five (5) business days for processing each resubmittal.
6. No extension of the contract time will be authorized because of failure to transmit submittals enough in advance of the work to permit processing.

H. Identification: Place a permanent label or title block on each submittal for identification.

1. Indicate name of firm or entity that prepared each submittal on label or title block.
2. Provide a space approximately 4 by 5 inches(100 by 125 mm)on label or beside title block to record Contractor's review and approval markings and action taken by Contractor.
3. Include the following information on label for processing and recording action taken:
   a. Project name.
   b. Date.
   c. Name and address of Architects,
   d. Name and address of Contractor.
   e. Name and address of subcontractor.
   f. Name and address of supplier.
   g. Name of manufacturer.
   h. Sub Unique identifier, including revision number.
   i. Number and title of appropriate Specification Section.
   j. Drawing number and detail references, as appropriate.
   k. Other necessary identification.

I. Deviations: Highlight, encircle or otherwise identify deviations from the Contract Documents on submittals.

J. Additional Copies: Unless additional copies are required for final submittal, and unless Architect observes noncompliance with provisions of the Contract Documents, initial submittal may serve as final submittal.

K. Transmittal: Package each submittal individually and appropriately for transmittal and handling. Transmit each submittal using a transmittal form. Architect will return submittals, without review, received from sources other than Contractor.

1. On an attached separate sheet, prepared on Contractor's letterhead, record relevant information, requests for data revisions other than those requested by Architect on previous submittals and deviations from requirements of the Contract Documents, including minor variations and limitations. Include the same label information as the related submittal.
2. Include Contractor's certification stating that the information submitted complies with the requirements of the Contract Documents.

L.. Distribute copies of reviewed submittals to concerned parties. Instruct parties to promptly report any inability to comply with provisions.

M. Transmittal Form: Use AIA Document G810. (Provide the following information):
   a. Project name.
   b. Date.
   c. Destination (To:).
   d. Source (From:).
   e. Names of subcontractor, manufacturer, and supplier.
   f. Category and type of submittal.
   g. Submittal purpose and description.
   h. Submittal and transmittal distribution record.
   i. Remarks.
   j. Signature of transmitter.

N. Distribution: Furnish copies of final submittals to manufacturers, subcontractors, suppliers, fabricators, installers, authorities having jurisdiction, and others as necessary for performance of construction activities. Show distributio on transmittal forms.

0. Use for Construction: Use only final submittals with mark indicating action taken by Architect in connection with construction.

© 2022 LDL STUDIO INC.

IF THIS SHEET IS NOT 24 X 36 IT IS A REDUCED SCALE PRINT - SCALE ACCORDINGLY

ARCHITECTS AIA 2030 CHALLENGE ADOPTER
LDL STUDIO INC. - CELEBRATING 27 YEARS OF AWARD WINNING SERVICE 1995 - 2022
WWW.LDLSTUDIO.COM

ARCHITECT OF RECORD:
LDL STUDIO
ARCHITECT / HOSPITALITY DESIGNER
LDL STUDIO, INC.
106 Putnam Street
Providence, RI 02909
P: 401.274.4516
F. 401.421.2631
www.ldlstudio.com
Architect of Record: Gary M. Lepore, AIA

CERTIFICATION:



CONSULTANTS:

M/E/P & FP ENGINEER:
HP ENGINEERING CONSULTING ENGINEERS, P.C.
15 MAIDEN LANE
NORTH HAVEN, CT
P: 203-239-9425
JOHN PHILLIPS, P.E.

STRUCTURAL ENGINEER:
AMR ENGINEERING INC.
82 SCENIC DRIVE
WEST WARWICK , RI 02893
P: 401.559.3659
ANTHONY ROTONDO, P.E.

OWNER:

RHODE ISLAND ZOOLOGICAL ASSOC.
FOR THE ROGER WILLIAMS PARK ZOO

1000 ELMWOOD AVENUE
PROVIDENCE
RHODE ISLAND 02907

NUMBER	DATE	DESCRIPTION

REVISIONS:

PROJECT NAME:

RED PANDA EXHIBIT

RWPZ
1000 ELMWOOD AVENUE
PROVIDENCE
RHODE ISLAND 02907

SUBMISSION TYPE: PERMIT SET

PROJECT TYPE: NEW CONSTRUCTION

CLIENT NUMBER: RWPZ 2022_01

ISSUE DATE: NOVEMBER 14, 2022

SHEET NAME: SPECIFICATIONS AND GENERAL CONDITION NOTES (CONTINUED)

DRAWING SCALE:

PROJECT NUMBER: 2022-03

DATE ISSUED: 11/14/2022

G1.3

SPECIFICATIONS AND GENERAL CONDITIONS (CONTINUED)

1.2 SUMMARY

A. This Section includes administrative and procedural requirements for submitting Shop Drawings, Product Data, Samples and other miscellaneous submittals and Architects procedural requirements for reviewing submission.

B. Related Sections: The following Sections of Contract Documents contain requirements that relate to this section and should be incorporated into terms of this scope of work

1. Division 1 Section 01290 "Payment Procedures" for submitting Applications for Payment.
2. Division 1 Section 01250 "Contract Modification Procedures" for crediting the Owner by Change Order for electronic copies of the Architect's drawings.
3. Division 1 Section 01310 "Project Management and Coordination" for submitting Coordination Drawings.
4. Division 1 Section 01230 "Alternates and Substitutions"

1.3 DEFINITIONS

A. Action Submittals: Written and graphic information that requires Architect's responsive action. Submittals may be rejected for not complying with requirements.

B. Informational Submittals: Written information that does not require Architect's approval.

1.4 SUBMITTAL PROCEDURES

A. General: Subject to the approval of the Owner, and Contractor's signature / approval of LDL Studio CAD Transfer Form the Architect will provide electronic copies of CAD drawings of the Contract Drawings for Contractor's use in preparing submittals. The CAD drawings will be transferred via e-mail and or an Internet file transfer website / platform. CAD drawings will be sent in LDL Studio current edition of CAD and or REVIT depending on the format LDL Studio is currently using for software for this project.

B. Coordination: The contractor shall coordinate preparation and processing of submittals with performance of construction activities.

1. The Contractor shall submit electronic / digital copies of each submittal within an e-mail or file transfer Internet or website platform. The electronic submittal will be furnished as a readable PDF format. Date of e-mail / file transfer will be used as date submittal was received by Architect.
2. Coordinate each submittal with fabrication, purchasing, testing, delivery, other submittals, and related activities that require sequential activity.
3. Coordinate transmittal of different types of submittals for related parts of the work so processing will not be delayed because of the need to review submittals concurrently for coordination.

a. The Architect reserves the right to withhold action on a submittal requiring coordination with other submittals until related submittals are received.

C. Submittals / Shop drawings to be received in a readable format including but not limited to language : English and all dimensions to be in Imperial measurement system

D. Samples of all products are to be submitted for approval. Each sample will be identified as follows: Identify project Contractor, Subcontractor or supplier, pertinent drawing sheet and detail number(s) as appropriate.

E. Apply the Contractor's stamp, signed or initialed certifying that required review, verification of products, field dimensions, adjacent construction work and coordination of information is in accordance with the requirements of the work and Contract Documents.

F. Identify variations from the Contract Documents and product or system limitations which may be detrimental to the successful performance of the completed work.

G. Processing Time: Allow enough time for submittal review, including time for re-submittals as follows/ Time for review shall commence on Architect's receipt of submittal.

1. Initial Review: Allow seven (7) days for initial review of each submittal. Additional time will be required if processing must be delayed to permit coordination with subsequent submittals. The Architect will advise the Contractor when a submittal being processed must be delayed for coordination.

a. Revise and resubmit submittals as required. Identify all changes made since previous submission.

2. Concurrent Review: Where concurrent review of submittals by the Architect, the Architect's consultants, Owner or other parties is required, 15 business days for the initial review of each submittal.
3. Direct Transmittal to Consultant: Where the Contract Documents indicate that submittals may be transmitted directly to the Architect's consultants, the Contractor shall provide a duplicate copy of the transmittal to the Architect. The submittal will be returned to the Contractor through the Architect.
4. If an intermediate submittal is necessary, it shall be processed in the same manner as the initial submittal.
5. Allow five (5) business days for processing each resubmittal.
6. No extension of the contract time will be authorized because of failure to transmit submittals enough in advance of the work to permit processing.

H. Identification: Place a permanent label or title block on each submittal for identification.

1. Indicate name of firm or entity that prepared each submittal on label or title block.
2. Provide a space approximately 4 by 5 inches(100 by 125 mm)on label or beside title block to record Contractor's review and approval markings and action taken by Contractor.
3. Include the following information on label for processing and recording action taken:
   a. Project name.
   b. Date.
   c. Name and address of Architects,
   d. Name and address of Contractor.
   e. Name and address of subcontractor.
   f. Name and address of supplier.
   g. Name of manufacturer.
   h. Sub Unique identifier, including revision number.
   i. Number and title of appropriate Specification Section.
   j. Drawing number and detail references, as appropriate.
   k. Other necessary identification.

I. Deviations: Highlight, encircle or otherwise identify deviations from the Contract Documents on submittals.

J. Additional Copies: Unless additional copies are required for final submittal, and unless Architect observes noncompliance with provisions of the Contract Documents, initial submittal may serve as final submittal.

K. Transmittal: Package each submittal individually and appropriately for transmittal and handling. Transmit each submittal using a transmittal form. Architect will return submittals, without review, received from sources other than Contractor.

1. On an attached separate sheet, prepared on Contractor's letterhead, record relevant information, requests for data revisions other than those requested by Architect on previous submittals and deviations from requirements of the Contract Documents, including minor variations and limitations. Include the same label information as the related submittal.
2. Include Contractor's certification stating that the information submitted complies with the requirements of the Contract Documents.

L. Distribute copies of reviewed submittals to concerned parties. Instruct parties to promptly report any inability to comply with provisions.

M. Transmittal Form: Use AIA Document G810. (Provide the following information):
   a. Project name.
   b. Date.
   c. Destination (To:).
   d. Source (From:).
   e. Names of subcontractor, manufacturer, and supplier.
   f. Category and type of submittal.
   g. Submittal purpose and description.
   h. Submittal and transmittal distribution record.
   i. Remarks.
   j. Signature of transmitter.

N. Distribution: Furnish copies of final submittals to manufacturers, subcontractors, suppliers, fabricators, installers, authorities having jurisdiction, and others as necessary for performance of construction activities. Show distributio on transmittal forms.

0. Use for Construction: Use only final submittals with mark indicating action taken by Architect in connection with construction.

0. Use for Construction: Use only final submittals with mark indicating action taken by Architect in connection with construction.

P. Revise and resubmit submittals as required. Identify all changes made since previous submittal.

Q. Distribute copies of reviewed APPROVED submittals to concerned parties. Instruct parties to promptly report any inability to comply with provisions noted in reviewed submittal.

PART 2 - PRODUCTS

2.1 ACTION SUBMITTALS

A. General: Prepare and submit Action Submittals required by individual Specification Sections.
1. The Contractor shall submit electronic / digital copies of each submittal within an e-mail or file transfer Internet or website platform. The electronic submittal will be furnished as a readable PDF format. Date of e-mail / file transfer will be used as date submittal was received by Architect. Note if submittal is seeking approval of a material that requires review of color, pattern, texture, or characteristic that requires physical inspection then Contractor will submit as follows:

a. Initial Submittal: Submit three (3) actual samples of material / product for review by Architect. If Submittal is rejected, or revision is requested, Contractor will resubmit three (3) actual samples of material / product for secondary review by Architect.
b. Final Submittal: If Architect returns submittal with "approved as noted and / or approved as noted resubmit for project record." The Contractor will resubmit Two (2) actual samples of final approved submittal - One for Owner and One for Architect project file records

2. If Contractor is submitting a submittal that does not require physical example , Contractor is to submit electronic / digital copy of submittal within an e-mail or Internet / website based file - document transfer system. Submit electronic copies of each submittal, as follows, unless otherwise indicated:

a. Initial Submittal: Submit electronic copy of each submittal with subject of e-mail and or file transfer clearly labeling Project name, Contractors / Architect's project number, title of what is being submitted and statement that this is initial submittal.
b. Final Submittal: If Architect returns submittal with "approved as noted and / or approved as noted resubmit for project record." The Contractor will resubmit electronic copy of the updated / revised submittal indicating that this is final submission for project record in the subject line of e-mail or Internet / website file transfer site. Owner to be copied on all Final Submittal correspondence for their record.

B. General Requirement on All Submittals - Contractor is required to review all submittals prior to submitting to Architect and or Architects Consultants. If Contractor does not review submittal and apply Contractor's review stamp / date noting his/her review for coordination to Instrument of Service and or what is being submitted in not in Contract documents and is an alternative or substitution that was not requested thru written Bulletin to Contractor and or Architect was notified prior to submission of submittal. The Architect and/or Architect's consultants reserves the right to reject submittal without review and return to Contractor with no impact on project schedule or THE WORK defined in instruments of service.

C. Product Data: Collect information into a single submittal for each element of construction and type of product or equipment.

1. If information must be specially prepared for submittal because standard printed data are not suitable for use, submit as Shop Drawings, not as Product Data.
2. Mark each copy of each submittal to show which products and options are applicable.
3. Include the following information, as applicable:
   a. Manufacturer's written recommendations.
   b. Manufacturer's product specifications.
   c. Manufacturer's installation instructions.
   d. Standard color charts.
   e. Manufacturer's catalog cuts.
   f. Wiring diagrams showing factory-installed wiring.
   g. Printed performance curves.
   h. Operational range diagrams.
   i. Mill reports.
   j. Standard product operating and maintenance manuals.
   k. Compliance with recognized trade association standards.
   l. Compliance with recognized testing agency standards.
   m. Application of testing agency labels and seals.
   n. Notation of coordination requirements.

D. Shop Drawings: Prepare Project-specific information, drawn accurately to scale. Do not base Shop Drawings on reproductions of the Contract Documents or standard printed data.

1. Shop drawings must be submitted as requested in the contract documents or as required in the manufacturers specifications unless by other arrangements made prior to contract signing. All shop drawings shall be made in the form of readable Electronic format
2. Preparation: Include the following information, as applicable:
   a. Dimensions.
   b. Identification of products.
   c. Fabrication and installation drawings.
   d. Roughing-in and setting diagrams.
   e. Wiring diagrams showing field-installed wiring, including power, signal, and control wiring.
   f. Shopwork manufacturing instructions.
   g. Templates and patterns.
   h. Schedules.
   i. Design calculations.
   j. Compliance with specified standards.
   k. Notation of coordination requirements.
   l. Notation of dimensions established by field measurement.
2. Wiring Diagrams: Differentiate between manufacturer-installed and field-installed wiring.
3. Sheet Size: Except for templates, patterns, and similar full-size drawings, submit Shop Drawings on sheets at least 8-1/2 by 11 inches (215 by 280 mm) but no larger than 30 by 40 inches(750 by 1000 mm).

E. Samples: Prepare physical units of materials or products, including the following:

1. Samples for Initial Selection: Submit manufacturer's color charts consisting of units or sections of units showing the full range of colors, textures, and patterns available.
2. Samples for Verification: Submit full-size units or Samples of size indicated, prepared from the same material to be used for the Work, cured and finished in manner specified, and physically identical with the product proposed for use, and that show full range of color and texture variations expected. Samples include, but are not limited to, the following:
   a. Partial sections of manufactured or fabricated components.
   b. Small cuts or containers of materials.
   c. Complete units of repetitively used materials.
   d. Swatches showing color, texture, and pattern.
   e. Color range sets
   f. Components used for independent testing and inspection.
3. Preparation: Mount, display, or package Samples in manner specified to facilitate review of qualities indicated. Prepare Samples to match Architect's sample where so indicated. Attach label on unexposed side that includes the following information:
   a. Generic description of Sample.
   b. Product name or name of manufacturer.
   c. Sample source.
4. Additional Information: On an attached separate sheet, prepared on Contractor's letterhead, provide the following:
   a. Size limitations.
   b. Compliance with recognized standards.
   c. Availability.
   d. Delivery time.

5. Submit Samples for review of kind, color, pattern, and texture for a final check of these characteristics with other elements and for a comparison of these characteristics between final submittal and actual component as delivered and installed.
   a. If variation in color, pattern, texture, or other characteristic is inherent in the product represented by a sample, submit at least three sets of paired units that show approximate limits of the variations.
   b. The Contractor shall provide samples that illustrate workmanship, fabrication techniques, details of assembly, connections, operation, and similar construction characteristics of each product submitted for approval.
6. Number of samples for initial selection: Submit three full set of available choices where color, pattern, texture, or similar characteristics are required to be selected from manufacturer's product line. Architect will return submittal with options selected within three (3) business days of receipt.
7. Number of samples for verification: Submit three sets of samples. Architect will retain one (1) sample set; remainder will be returned.
   a. Submit a single Sample where assembly details, workmanship, fabrication techniques, connections, operation, and other similar characteristics are to be demonstrated.
8. Disposition: Maintain sets of approved Samples at Project site, available for quality-control comparisons throughout the course of construction activity. Sample sets may be used to determine final acceptance of construction associated with each set.
   a. Samples that may be incorporated into the work are indicated in individual specification Sections. Such samples must be in an undamaged condition at time of use.
   b. Samples not incorporated into the work, or otherwise designated as Owner's property, are the property of the Contractor.

F. Product Schedule or List: Prepare a written summary indicating types of products required for the work and their intended location. Include the following information in tabular form:

1. Type of product. Include unique identifier for each product.
2. Number and name of room or space
3. Location within room or space.

G. Application for Payment: Comply with requirements in AIA 201 - 2017 Division 1 Section 01290 "Payment Procedures."

H. Schedule of Values: Comply with requirements in AIA A201 - 2017 Division 1 Section 01290 "Payment Procedures."

2.2 INFORMATIONAL SUBMITTALS

A. General: Prepare and submit Informational Submittals required by other Specification Sections.

1. The Contractor shall submit electronic / digital copies of each submittal within an e-mail or file transfer Internet or website platform. The electronic submittal will be furnished as a readable PDF format. Date of e-mail / file transfer will be used as date submittal was received by Architect. The Architect will not return Informational Submittal unless Action is required and or requested.
2. Certificates and Certifications: Provide a notarized statement that includes signature of entity responsible for preparing certification. Certificates and certifications shall be signed by an officer or other individual authorized to sign documents on behalf of that entity.
3. Test and Inspection Reports: The Contractor shall provide test and inspection reports as required by the Owner, Architect and/or Engineer of Record or product manufacturer as requested where necessary to comply with requirements of the manufacturer's, building code and project specified requirements

B. Contractor's Construction Schedule: The Contractor shall submit a Construction Schedule to the Owner and Architect prior to the start of construction. The Construction Schedule shall be in graphic form produced using an industry standard scheduling program and shall include project milestones, scheduled project meetings, scheduled shop drawing submittals and the scheduled dates on which the FF&E is to be ordered at a minimum. This Schedule may require Owner's required benchmarks and Contractor may be asked to include Owner information in Construction Scheduled.

C. Subcontract List: Prepare a written summary identifying individuals or firms proposed for each portion of the Work, including those who are to furnish products or equipment fabricated to a special design. [Use CSI Form 1.5A.] Include the following information in tabular form:

1. Qualification Data: Prepare written information that demonstrates capabilities and experience of firm or person. Include lists of completed projects with project names and addresses, names and addresses of architects and owners, and other information specified.
2. Name, address, website, e-mail and telephone number of entity performing subcontract or supplying products.
3. Number and title of related Specification Section(s) covered by subcontract.
4. Drawing number and detail references, as appropriate, covered by subcontract.

D. Product Certificates: Prepare written statements on manufacturer's letterhead certifying that product complies with requirements for use on this project.

E. Welding Certificates: Prepare written certification that welding procedures and personnel comply with requirements of the American Welding Society (AWS). Submit record of Welding Procedure Specification (WPS) and Procedure Qualification Record (PQR) on AWS forms. Include names of firms and personnel certified.

F. Installer Certificates: Prepare written statements on manufacturer's letterhead certifying that Installer complies with requirements of the manufacturer for the products to be installed and, where required, is authorized for this specific Project.

G. Material Certificates: Where appropriate prepare written statements on manufacturer's letterhead certifying that their material/product complies with the requirements for use on this project.

H. Material Test Reports: Prepare reports written by a qualified testing agency, on testing agency's standard form, indicating and interpreting test results of material for compliance with manufacturer's and building code and project specified requirements.

I. Pre-construction Test Reports: Prepare reports written by a qualified testing agency, on testing agency's standard form, indicating and interpreting results of tests performed before installation of product, for compliance with manufacturer's specified and building code and project performance requirements.

J. Compatibility Test Reports: Prepare reports written by a qualified testing agency, on testing agency's standard form, indicating and interpreting results of compatibility tests performed before installation of product. Include written recommendations for primers and substrate preparation needed for adhesion.

K. Field Test Reports: Prepare reports written by a qualified testing agency, on testing agency's standard form, indicating and interpreting results of field tests performed either during installation of product or after product is installed in its final location, where testing is necessary to determine compliance with manufacturer's specified and building code and project performance requirements.

L. Product Test Reports: Prepare written reports indicating current product produced by manufacturer complies with project requirements. Base reports on evaluation of tests performed by manufacturer and witnessed by a qualified testing agency, or on comprehensive tests performed by a qualified testing agency.

M. Research/Evaluation Reports: Provide written evidence, substantiated by a model code organization acceptable to authorities having jurisdiction, that product complies with building code in effect for Project. Include the following information:

1. Name of evaluation organization.
2. Date of evaluation.
3. Time period when report is in effect.
4. Product and manufacturers' names.
5. Description of product.
6. Test procedures and results.

P. Maintenance Data: Prepare written and graphic instructions and procedures for operation and normal maintenance of products and equipment to be submitted at substantial completion of project.

Q. Manufacturer's instructions: The Contractor shall provide written or published information that documents manufacturer's recommendations, guidelines, and procedures for installing or operating a product or equipment. Include name of product and name, address,and telephone number of manufacturer. Include the following as applicable:

1. Preparation of substrates
2. Required substrate tolerances
3. Sequence of installation or erection
4. Required installation tolerances
5. Required adjustment
6. Recommendations for cleaning and protection.

PART 3 - EXECUTION

3.1 CONTRACTOR'S REVIEW

A. The Contractor shall review each submittal and check for compliance with the Contract Documents. Note corrections and field dimensions. Submittals shall be marked with approval stamp before submitting to Architect.

B. Approval Stamp: Stamp each submittal with a uniform, approval stamp. Include Project name and location, submittal number,Specification Section title and number, name of reviewer, date of Contractor's approval, and statement certifying that submittal has been reviewed, checked, and approved for compliance with the Contract Documents.

3.2 ARCHITECT'S ACTION

A. General: Architect will not review submittals that do not bear Contractor's approval stamp and will return them without action.

B. Action Submittals: Architect will review each submittal, make marks to indicate corrections or modifications required, and return it. Architect will stamp each submittal with an action stamp and will mark stamp appropriately to indicate action taken, as follows:

1) **APPROVED**: Final Unrestricted Release - the Work covered by the submittal may proceed provided it complies with the Contract Documents. Final acceptance will depend on that compliance. This action only applies when there are no marks on the submittal.
2) **APPROVED AS NOTED**: Final- But-Restricted Release - the Work covered by the submittal may proceed provided it complies with both the Architect's notations and corrections on the submittal and the Contract Documents. Final acceptance will depend on that compliance.
3) **APPROVED AS NOTED - RESUBMIT RECORD COPY**: Final-But-Restricted Release - the Work covered by the submittal may proceed provided it complies with both the Architect's notations and corrections on the submittal and the Contract Documents. Final acceptance will depend on that compliance. A revised or new submittal is required to be submitted to the Architect for record purposes.
4) **REJECTED**: Rejected - the Work covered by the submittal may not proceed. A new submittal for a product that complies with the Contract Documents must be submitted to the Architect.

C. Informational Submittals: Architect will review each submittal and will not return it, or will reject and return it if it does not comply with requirements. Architect will forward each submittal to appropriate party within the defined time.

D. Delegated Design Submittals: Architect will review each submittal and return the submittal with a letter indicating any issues.

E. Submittals not required by the Contract Documents will not be reviewed and may be discarded.

F. Architect will review each submittal a maximum of three times. The contractor will be charged on a time and material basis for the Architect's review of all submittals after the third submission. In addition, the contractor will be charged for review of out of sequence submittals as outlined on the approved submittal schedule.

G. Architect will not review material requested for immediate turnaround. The contractor will be charged on a time and material basis for the Architect's review of all submittals that require single day submission. In addition, the contractor will be charged for review of out of sequence submittals as outlined on the approved submittal schedule.

END OF SECTION

PART 4 - ADMINISTRATION OF CONTRACT

4.1 GENERAL

A. The Architect will provide administration of the Contract as described in the Contract Documents and will be Owners representative during construction unit the date the Architect issues the final Certificate for Payment. The Architect will have the authority to act on behalf of the Owner only to the extent provided in the Contract Documents.

B. The Architect will visit the site at intervals appropriate to the stage of construction, or otherwise agreed with the Owner or defined in the Contract Documents, to become generally familiar with the progress and quality of the portion of the Work completed, and to determine in general if the Work observed is being performed in a manner indicating that the Work, when fully completed, will be in accordion with the Contract Documents. However, the Architect will not be required to make exhaustive or continuous on-site inspections to check the quality or quantity of the Work. The Architect will not have control over, charge of, or responsibility for the construction means, methods, techniques, sequences or procedures, or the safety precautions and programs in connection with the Work, since these are solely the Contractor's right and responsibilities under the Contract Documents.

C. On the basis of the site visits, the Architect will keep the Owner reasonably informed about the progress and quality of the portion of the Work complotted, and promptly report to the Owner (1) known deviations form the Contract Documents / Instruments of Service (2) known deviations from the most recent construction schedule submitted by the Contractor, and (3) defects ands deficiencies observed in the Work. The Architect will not be responsible for the Contractor's failure to perform the Work in accordance with the requirements of the Contract Documents. The Architect will not have control over or charge of, and will not be responsible for acts of omission, of the Contractor, Subcontractor, Sub--subcontractor, fabricators or suppliers, or their agents or employees, or any other person or entities performing portions of the Work.

D. The Architect has the authority to reject Work that does not conform to the Contract Documents / Instrument of Service.

E. The Architect will have the authority to require inspection or testing of the Work in accordance with terms defined in the Contract Documents, whether the or not the Work is fabricated, installed or completed. However, neither this authority of the Architect nor a decision made in good faith either to exercise or not to exercise such authority shall give rise to a duty of responsibility of the Architect to the Contractor, Sub-Contractor, Sub-subcontractor, Fabricator or supplier their agents or employees, or other persons or entities performing portions of the Work .

F. The Architect's review shall not constitute approval of safety precautions or any construction means, methods, techniques, sequences, or procedures. In Addition, The Architect's review does not constitute expertise or approval of product, fabrication, instillation, means and methods of Construction, the Architect provides review as an observation / opinion based on a measure of defined opinion in comparison to similar professional / registered Architects. providing similar service. This is further defined in Contracts Documents.

G. The Architect and Architect's Consultants will provide written response to all requested information pertaining to The Work, within time limited established in Contractor Documents and within Instruments of Service. Under no circumstances will verbal approval / disapproval serve as a directive or response to any and all request for information. Contractor is hereby notified that all clarifications or request for information pertaining to the contract documents, instruments of service and the Works must be submitted in writhen agreed to format and Architect will respond in writing as a means to track all progress and possible adjustments or changes to the Work.

H. Interpretation and decisions of the Architect will be consistent with the intent of, and reasonable inferable from, the Contractor Documents and will be in writing or in the form of drawings. When making such interpretations and decisions, the Architect will endeavor to secure faithful performance by both the owner and contractor, will not show partiality to either, and will not be liable in any legal manner for results of interpretation of decisions rendered in good faith.

i. The Owner, Contractor and Architect agree to include and share all communications pertaining to the Work, Instruments of service, Contractor Documents that may impact, alter or change the project / the work and the time schedule or has an impact on responsibilities as defined in the Contractor Documents. Communications with the Architect's Consultants maybe permitted upon mutually agreement by Owner, Architect and Contractor, However, all communications to Architect's Consultants must include Architect. If directed by Owner, Architect and Contractor may communicate with Owner supplied consultants, venders, suppliers or contractors as communication relates to the Work. Any and all communications to Owner provided consultants, vendors, suppliers or contractors must be copied to Architect, Contractor and Owner.

1. Communication maybe defined as telephone calls, e-mails, post to electronic file share platform and or administrative work thru Construction management software and Internet based platforms.
2. All communications must contain in name, header or subject line the Name of Project, Architects Project number, Contractors Project number , Owners Project number (if applicable) and description of content in communication

J. The Owner, Architect and Contractor mutually agree to establish the definition of the Contract time and Construction Schedule, the date of the commencement of work, the date of Substantial Completion and define the term "Day" unless previously established in Contract Documents. Moreover, if benchmarks are established in the project schedule that are part of The Work or the Owner's criteria for the project, then the Owner, The Contractors and the Architect agree to establish said benchmarks and clarify consequences if benchmarks are impacted by Actions of the Owner, The Contractor and The Architect.

END OF SECTION

© 2022 LDL STUDIO INC.

IF THIS SHEET IS NOT 24 X 36 IT IS A REDUCED SCALE PRINT - SCALE ACCORDINGLY
ARCHITECTS AIA 2030 CHALLENGE ADOPTER
LDL STUDIO INC. - CELEBRATING 27 YEARS OF AWARD WINNING SERVICE 1995 - 2022
WWW.LDLSTUDIO.COM

ARCHITECT OF RECORD:
LDL STUDIO
ARCHITECT / HOSPITALITY DESIGNER
LDL STUDIO, INC.
106 Putnam Street
Providence, RI 02909
P: 401.274.4516
F. 401.421.2631
www.ldlstudio.com
Architect of Record: Gary M. Lepore, AIA

CERTIFICATION:

CONSULTANTS:
M/E/P & FP ENGINEER:
HP ENGINEERING CONSULTING ENGINEERS, P.C.
15 MAIDEN LANE
NORTH HAVEN, CT
P: 203-239-9425
JOHN PHILLIPS, P.E.

STRUCTURAL ENGINEER:
AMP ENGINEERING INC.
82 SCENIC DRIVE
WEST WARWICK , RI 02893
P: 401.559.3659
ANTHONY ROTONDO, P.E.

OWNER:
ROGER WILLIAMS PARK ZOO
RHODE ISLAND ZOOLOGICAL ASSOC.
FOR THE ROGER WILLIAMS PARK ZOO
1000 ELMWOOD AVENUE
PROVIDENCE
RHODE ISLAND 02907

NUMBER	DATE	DESCRIPTION

REVISIONS:

PROJECT NAME:
RED PANDA EXHIBIT
RWPZ
1000 ELMWOOD AVENUE
PROVIDENCE
RHODE ISLAND 02907

SUBMISSION TYPE:
PERMIT SET

PROJECT TYPE:
NEW CONSTRUCTION

CLIENT NUMBER:
RWPZ 2022_01

ISSUE DATE: NOVEMBER 14, 2022

SHEET NAME:
SPECIFICATIONS AND GENERAL CONDITION NOTES (CONTINUED)

DRAWING SCALE: NO SCALE
PROJECT NUMBER: 2022-03
DATE ISSUED: 11/14/2022

G1.4

END OF SECTION

PART 5 - LEGAL RELEASE

5.1 GENERAL BINDING AGREEMENT

A. General Contractor, all Sub-Contractors, Sub-subcontractors, builders, fabricators and installers are hereby notified that acceptance of these instruments of service and initiation of construction and / or any form of fabrication is acceptance of the project depicted within these documents. The definition of "acceptance of project" means the General Contractor, Sub-Contractors, builders, fabricators and installers release and can not hold liable LDL Studio Inc. from any and / or all Legal actions should such action arise as an outcome of this project. Further, LDL Studio cannot be named by General Contractor, Sub- Contractor, Sub-subcontractor, builders, fabricators, supplier and installers in a Third Party Complaint, and / or within a Lien or Law suit against Client, Owner, Landlord or project.

B. The Architect and The Architect's Consultants shall be deemed the authors and owners of their respective instruments of service, including the drawings and specifications, and retain all common law, statutory, and other reserved rights in their instrument of service, including copyrights. the Contractor, subcontractors,sub-subcontractors, fabricators and suppliers shall not own or claim a copyright in the instruments of service. Submittal or distribution to meet official regulatory requirements or for other purposes in connection with the project is not to be constructed as publication in derogation of the Architect's or Architect's consultants' reserved rights.

C. The Contractor, Subcontractor, sub-subcontractor, fabricator and suppliers are authorized to use and reproduce the instruments of service provided to them, subject to any protocols established pursuant to sections and or terms of Contract signed between Architect and Owner solely and exclusively for execution of THE WORK. All copies made under the authorization shall bear the copyright notice, if any, shown on the instruments of service. The Contractor, Sub-Contractor, Sub-Subcontractor, fabricator and suppliers may not use instruments of service on other projects or for additions to the project outside the scope of work without the specific written consent of the Owner, Architect, and the Architect's Consultant.

D. Digital Data Use and Transmission - The parties shall agree upon protocols governing the transmission and use of Instruments of Service or any other information or documentation in digital form. The parties may elect to use AIA E203 (current edition) digital data exhibit, to establish the protocols for the development, use, transmission, and exchange of digital data. All parties are notified that transmission of any and all instruments of service inclusive of posting of digital data to a Internet base sharing or printing platform is not considered a sales of said data and all copyright protections defined in this contract document are maintained. LDL Studio Inc. may elect to submit a digital file transfer form for signature in order to transmit or share instruments of service, here again this is not a sales or transfer of copyright protected interments of service it is a permitted use of said instruments of service.

E. Owner's right to Stop the work - If the Contractor fails to correct THE WORK that is not in accordance with the requirements of the contract documents as required by signed contract between owner and contractor or repeatedly fails to carry out work in accordance with the Contract Documents, the Owner may issue a written order to the Contractor to stoop the work, or any portion thereof, until the cause for such order has been eliminated; however, the right of the Owner to stop the work shall not give rise to a duty on the part of the Owner to exercise this right for the benefit of the Contractor or any other person or entity, except to the extend defined within the contract document agreed to by Owner and Contractor.

F. The Owner / Client / Architect and Contractor understands and agrees that products or building materials that are permissible under current building codes and ordinances may, at some future date, be banned or limited in use in the construction industry because of presently unknown hazardous and\or defective characteristics. The Owner/Client / Architect and Contractor agrees that if any such product or material specified for this Project by LDL Studio or installed by Contractor under Contract Documents shall, at any future date be suspected or discovered to be defective or a health or safety hazard, then the Owner / Client/ Contractor shall waive all claims as a result thereof against LDL Studio. The Owner / Client/ Contractor further agrees that if the Owner/Client directs LDL Studio to specify any product or material after LDL Studio has informed the Owner/Client that such product or material may not be suitable or may embody characteristics that are suspected of causing or may cause the product or material to be considered a hazardous substance in the future, the Owner/ Client waives all claims as a result thereof against LDL Studio and the Owner / Client agrees, to the fullest extent permitted by law, to indemnify and hold harmless LDL Studio from any damages, liabilities or costs including reasonable attorneys' fees and defense costs, arising in any way from the specification or use of any products or materials which, at any future date, become know or suspected health and safety hazards.

G. Failure of Payment (if not defined in Contract - the following can be applied)
   1. If a certificate for Payment is being used on the project - If the Architect does not issue a signed / reviewed Certificate of Payment, through no fault of the Contractor, within seven days after receipt of the Contractor's Application for Payment, or if the Owner does not pay the Contractor within seven days after the date established in the Contract Documents, the amount certified by the Architect or awarded by binding dispute resolution, then the Contractor may, upon seven additional days send notice to the Owner and Architect, stop the Work until payment of the amount owing has been received. The Contract time shall be extended appropriately and the Contract Sum shall be increased by the amount of the Contractor's reasonable cost of shutdown, delay and start-up, plus interested as defined in the Contract Documents.
   2. If Contractors submits invoicing directly to the Owner and does not use an Application and Certificate for Payment (AIA G702-1992) that is reviewed by Architect and Owner fails to pay Contractor in time structure established by Contract Documents and Contractor is preparing to Stop Work, Contractor must first notify Architect in writing and provide seven days notice that His/Her intention is to stop work for Failure to make payment on issued invoice or awarded amount by binding dispute resolution so Architect may prepare for work stoppage.

END OF SECTION

ARTICLE 7 CHANGE IN WORK

A. Architects Drawings and Architects' Consultant drawings are considered Legal Documents when Adhered, certified with Professional Seal / Stamp issued by Authorities having Jurisdiction / regulatory agencies overseeing the Profession of Architecture or Engineering within the location of said project and or THE WORK and accompanied by signature of certified Architect or Engineer. As such Legal Documents are protected by Laws, regulations under the Jurisdiction in which the documents and or instruments of service where issued and may also be regulated by the State or Jurisdiction in which the Contractor, Architect or Owner is registered as a business entity.

B. Changes in THE WORK may be accomplished after execution of the contract, and without invalidating the contract by Change Order, Construction Change Directive or order for minor changes in the work, subject to the limitation stated in Contract Documents.

C. A Change Order shall be based upon agreement among the Owner / Client , Contractor and Architect. A Construction Change Directive requires agreement by the Owner and Architect and may or many not be agreed to by the Contractor. An order for minor changes in THE WORK may be issued by the Architect alone.

D. Changes in THE WORK shall be performed under applicable provisions on the Contract Documents, The Contractor shall proceed promptly with the changes in work, unless otherwise provided in the Change Order, Construction Change Directive, or order for a minor change in work.

E. A Change Order is a written instrument prepared by the Architect and signed by the Owner, Contractor and Architect stating their agreement upon all of the following:
   1. The Change in work
   2. The amount of the adjustment, if any, in the Contract Sum; and
   3. The extent of the adjustment, if any, in the contract time.

F. At the start of Construction Architect will review with Contractor and Owner all procedures responsibilities, obligation and requirements needed to Change Scope of the Work defined within the Instruments of Service beyond those already defined in Contract Documents and by signed agreements between Owner and Contractors.

END OF SECTION

IF THIS SHEET IS NOT 24 X 36 IT IS A REDUCED SCALE PRINT - SCALE ACCORDINGLY
WWW.LDLSTUDIO.COM LDL STUDIO INC. - CELEBRATING 27 YEARS OF AWARD WINNING SERVICE 1995 - 2022 ARCHITECTS AIA 2030 CHALLENGE ADOPTER

ARCHITECT OF RECORD:
LDL STUDIO
ARCHITECT / HOSPITALITY DESIGNER
LDL STUDIO, INC.
106 Putnam Street
Providence, RI 02909
P: 401.274.4516
F. 401.421.2631
www.ldlstudio.com
Architect of Record: Gary M. Lepore, AIA

CERTIFICATION:

CONSULTANTS:
M/E/P & FP ENGINEER:
HP ENGINEERING CONSULTING ENGINEERS, P.C.
15 MAIDEN LANE
NORTH HAVEN, CT
P: 203-239-9425
JOHN PHILLIPS, P.E.

STRUCTURAL ENGINEER:
AMP ENGINEERING INC.
82 SCENIC DRIVE
WEST WARWICK , RI 02893
P: 401.559.3659
ANTHONY ROTONDO, P.E.

OWNER:
RHODE ISLAND ZOOLOGICAL ASSOC.
FOR THE ROGER WILLIAMS PARK ZOO
1000 ELMWOOD AVENUE
PROVIDENCE
RHODE ISLAND 02907

NUMBER	DATE	DESCRIPTION

REVISIONS:

PROJECT NAME:
RED PANDA EXHIBIT
RWPZ
1000 ELMWOOD AVENUE
PROVIDENCE
RHODE ISLAND 02907

SUBMISSION TYPE:
PERMIT SET

PROJECT TYPE:
NEW CONSTRUCTION

CLIENT NUMBER:
RWPZ 2022_01

ISSUE DATE: NOVEMBER 14, 2022

SHEET NAME:
SPECIFICATIONS AND GENERAL CONDITION NOTES (CONTINUED)

DRAWING SCALE: NO SCALE
PROJECT NUMBER: 2022-03
DATE ISSUED: 11/14/2022

G1.5

© 2022 LDL STUDIO INC.

ARCHITECTS AIA 2030 CHALLENGE ADOPTER
LDL STUDIO INC. - CELEBRATING 27 YEARS OF AWARD WINNING SERVICE 1995 - 2022
WWW.LDLSTUDIO.COM
IF THIS SHEET IS NOT 24 X 36 IT IS A REDUCED SCALE PRINT - SCALE ACCORDINGLY

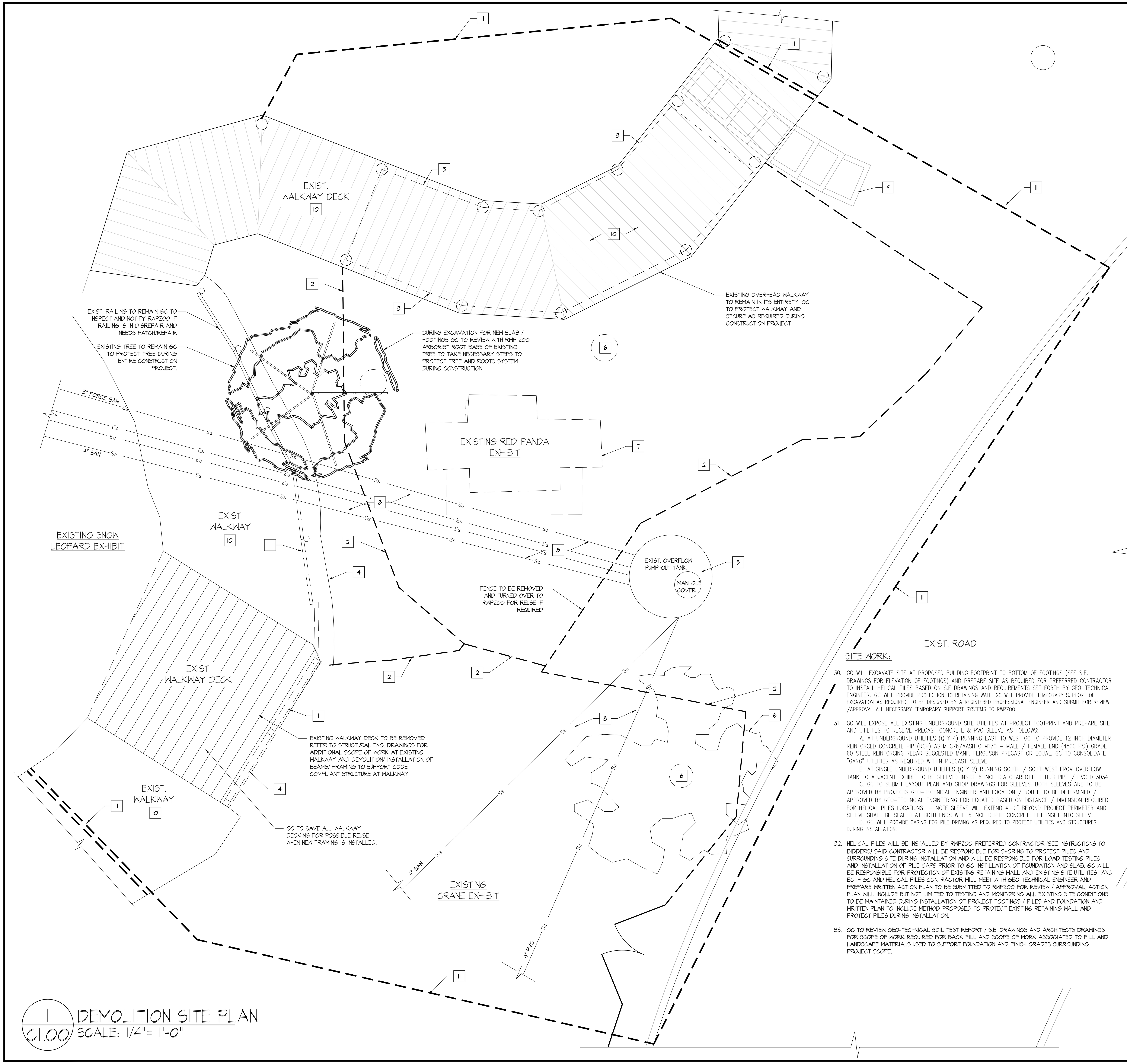

SITE WORK:

30. GC WILL EXCAVATE SITE AT PROPOSED BUILDING FOOTPRINT TO BOTTOM OF FOOTINGS (SEE S.E. DRAWINGS FOR ELEVATION OF FOOTINGS) AND PREPARE SITE AS REQUIRED FOR PREFERRED CONTRACTOR TO INSTALL HELICAL PILES BASED ON S.E DRAWINGS AND REQUIREMENTS SET FORTH BY GEO-TECHNICAL ENGINEER. GC WILL PROVIDE PROTECTION TO RETAINING WALL .GC WILL PROVIDE TEMPORARY SUPPORT OF EXCAVATION AS REQUIRED, TO BE DESIGNED BY A REGISTERED PROFESSIONAL ENGINEER AND SUBMIT FOR REVIEW /APPROVAL ALL NECESSARY TEMPORARY SUPPORT SYSTEMS TO RWPZOO.
31. GC WILL EXPOSE ALL EXISTING UNDERGROUND SITE UTILITIES AT PROJECT FOOTPRINT AND PREPARE SITE AND UTILITIES TO RECEIVE PRECAST CONCRETE & PVC SLEEVE AS FOLLOWS:
    A. AT UNDERGROUND UTILITIES (QTY 4) RUNNING EAST TO WEST GC TO PROVIDE 12 INCH DIAMETER REINFORCED CONCRETE PIP (RCP) ASTM C76/AASHTO M170 – MALE / FEMALE END (4500 PSI) GRADE 60 STEEL REINFORCING REBAR SUGGESTED MANF. FERGUSON PRECAST OR EQUAL. GC TO CONSOLIDATE "GANG" UTILITIES AS REQUIRED WITHIN PRECAST SLEEVE.
    B. AT SINGLE UNDERGROUND UTILITIES (QTY 2) RUNNING SOUTH / SOUTHWEST FROM OVERFLOW TANK TO ADJACENT EXHIBIT TO BE SLEEVED INSIDE 6 INCH DIA CHARLOTTE L HUB PIPE / PVC D 3034
    C. GC TO SUBMIT LAYOUT PLAN AND SHOP DRAWINGS FOR SLEEVES. BOTH SLEEVES ARE TO BE APPROVED BY PROJECTS GEO-TECHNICAL ENGINEER AND LOCATION / ROUTE TO BE DETERMINED / APPROVED BY GEO-TECHNCIAL ENGINEERING FOR LOCATED BASED ON DISTANCE / DIMENSION REQUIRED FOR HELICAL PILES LOCATIONS – NOTE SLEEVE WILL EXTEND 4'-0" BEYOND PROJECT PERIMETER AND SLEEVE SHALL BE SEALED AT BOTH ENDS WITH 6 INCH DEPTH CONCRETE FILL INSET INTO SLEEVE.
    D. GC WILL PROVIDE CASING FOR PILE DRIVING AS REQUIRED TO PROTECT UTILITIES AND STRUCTURES DURING INSTALLATION.
32. HELICAL PILES WILL BE INSTALLED BY RWPZOO PREFERRED CONTRACTOR (SEE INSTRUCTIONS TO BIDDERS) SAID CONTRACTOR WILL BE RESPONSIBLE FOR SHORING TO PROTECT PILES AND SURROUNDING SITE DURING INSTALLATION AND WILL BE RESPONSIBLE FOR LOAD TESTING PILES AND INSTALLATION OF PILE CAPS PRIOR TO GC INSTILLATION OF FOUNDATION AND SLAB. GC WILL BE RESPONSIBLE FOR PROTECTION OF EXISTING RETAINING WALL AND EXISTING SITE UTILITIES AND BOTH GC AND HELICAL PILES CONTRACTOR WILL MEET WITH GEO-TECHNICAL ENGINEER AND PREPARE WRITTEN ACTION PLAN TO BE SUBMITTED TO RWPZOO FOR REVIEW / APPROVAL, ACTION PLAN WILL INCLUDE BUT NOT LIMITED TO TESTING AND MONITORING ALL EXISTING SITE CONDITIONS TO BE MAINTAINED DURING INSTALLATION OF PROJECT FOOTINGS / PILES AND FOUNDATION AND WRITTEN PLAN TO INCLUDE METHOD PROPOSED TO PROTECT EXISTING RETAINING WALL AND PROTECT PILES DURING INSTALLATION.
33. GC TO REVIEW GEO-TECHNICAL SOIL TEST REPORT / S.E. DRAWINGS AND ARCHITECTS DRAWINGS FOR SCOPE OF WORK REQUIRED FOR BACK FILL AND SCOPE OF WORK ASSOCIATED TO FILL AND LANDSCAPE MATERIALS USED TO SUPPORT FOUNDATION AND FINISH GRADES SURROUNDING PROJECT SCOPE.

1 / C1.00 DEMOLITION SITE PLAN
SCALE: 1/4"= 1'-0"

GENERAL NOTES:

1. ALL DEMOLITION WORK SHALL BE PERFORMED IN ACCORDANCE WITH STATE AND LOCAL REGULATIONS APPLICABLE TO THIS PROJECT.
2. ARRANGE WITH THE OWNER AND/OR APPROPRIATE UTILITIES FOR SERVICE SHUTOFFS BEFORE BEGINNING DEMOLITION OPERATION.
3. TAKE SPECIAL CARE TO CONTROL DUST AND NOSE TO AVOID DISTURBING ZOO ANIMALS. GC TO REVIEW WITH RWPZOO ANIMAL CARE STAFF PROTOCOLS/ STANDARDS FOR WORKING ADJACENT TO ANIMALS PRIOR TO COMMENCEMENT OF PROJECT.
4. WIND BORNE DUST FROM EXPOSED SOIL SURFACES DURING LAND DISTURBING/ CONSTRUCTION ACTIVITIES SHALL BE CONTROLLED WITH FREQUENT WATER IRRIGATION APPLICATIONS AND/ OR CALCIUM CHLORIDE. CALCIUM CHLORIDE SHALL BE APPLIED WITH A MECHANICAL SPREADER IN STRICT ACCORDANCE WITH THE SUPPLIER'S SPECIFIED RATES AND ZOO GUIDELINE FOR USE OF CHEMICALS NEAR ANIMALS.
5. INSTALL CATCH BASIN SILT SOCKS IN EXISTING CATCH BASINS ON STREET DOWN STREAM FROM PROJECT AREA PRIOR TO DEMOLITION/ CONSTRUCTION.
6. PROVIDE TEMPORARY CONSTRUCTION FENCING AROUND PERIMETER OF SITE PRIOR TO CONSTRUCTION.
7. THE CONTRACTOR IS RESPONSIBLE FOR ALL SOIL EROSION AND SEDIMENT CONTROL ONSITE. THE CONTRACTOR IS TO NOTIFY THE DESIGN ENGINEER, THE DIRECTOR OF ZOO FACILITIES/ MAINTENANCE, THE CITY ENGINEER AND RI DEPT. OF ENVIRONMENTAL MANAGEMENT AT LEAST 48 HOURS PRIOR TO THE START OF CONSTRUCTION.
8. CONTRACTOR TO OBTAIN ALL STATE AND MUNICIPAL APPROVALS /PERMITS PRIOR TO THE START OF CONSTRUCTION.
9. ALL WORK PERFORMED HEREIN SHALL BE GOVERNED BY THE RHODE ISLAND STANDARD SPECIFICATION FOR PUBLIC WORKS CONSTRUCTION AND CITY OF PROVIDENCE STANDARD SPECIFICATIONS AND DETAILS.
10. SEQUENCE OF CONSTRUCTION PROVIDED/ SHOWN MAY BE MODIFIED AS FIELD CONDITIONS WARRANT WITH PRIOR APPROVAL FROM THE OWNER OR OWNER'S REPRESENTATIVE.
11. THE CONTRACTOR SHALL COORDINATE WITH ALL OF THE APPROPRIATE UTILITY COMPANIES FOR AGREEMENTS TO SERVICE THE PROPOSED BUILDING. THIS SHALL BE DONE PRIOR TO CONSTRUCTION.
12. THE CONTRACTOR IS RESPONSIBLE FOR DETERMINING FINISH GRADING AND DRAINAGE AROUND THE BUILDING TO ENSURE SURFACE WATER AND/ OR GROUND WATER ARE DIRECTED AWAY FROM THE STRUCTURE.
13. ALL PROPOSED UNDERGROUND UTILITIES SERVING THE SITE AND BUILDINGS TO BE COORDINATED WITH APPLICANT, ARCHITECT AND ENGINEER PRIOR TO INSTALLATION.
14. ALL CUTE AND FILL AREAS ARE TO BE DONE UNDER THE DIRECTION OF A GEOTECHINICAL ENGINEER WITH TESTING AND CERTIFICATION TO BE PROVIDED TO THE APPLICANT AT THE COMPLETION OF THE PROJECT.
15. ALL COMPONENTS OF THE DRAINAGE, SEWER AND WATER SYSTEMS MUST BE AS-BUILT PRIOR TO COVERING. THE THIRD PARTY CONSULTANT UNDER CONTRACT TO RWPZ TO BE NOTIFIED PRIOR TO COVERING TO SURVEY AS-BUILT LOCATIONS. ENGINEER WILL NOT ACCEPT FIELD MEASUREMENTS FROM THE SITE CONTRACTOR.
16. NO STOCKPILING OF MATERIAL TO BE LOCATED IN THE RIGHT OF WAY AND NO OPEN TRENCHES ARE TO BE LEFT OVERNIGHT.
17. ALL LOAM IN DISTURBED AREAS TO BE STOCKPILED FOR FUTURE USE.
18. ALL EXCESS SOIL, TREES, ROCKS, BOULDERS, AND OTHER REFUSE, SHALL BE DISCARDED OFF SITE IN AN ACCEPTABLE MANNER AT AN APPROVED LOCATION. STUMPS SHALL BE GROUND ONSITE OR REMOVED.
19. NO STUMP DUMPS ARE PROPOSED ONSITE.
20. ALL EXISTING UTILITIES MUST BE FIELD VERIFIED PRIOR TO START OF PROJECT. INFORMATION SHOWN ARE FROM VISIBLE OBSERVATION, AND OBTAINED FROM DRAWINGS OVER 15 YEARS OLD AND MAY HAVE BEEN CHANGED OR MODIFIED. CLIENT HAS HIRED A 3RD PARTY CONSULTANT TO FIELD VERIFY ALL SITE UTILITIES AND SOIL BEARING CAPACITY. PRIOR TO CONSTRUCTION, THE PROPER UTILITY ENGINEER DEPARTMENTS SHALL BE CONTACTED AND THE ACTUAL LOCATION OF SUBSURFACE STRUCTURES SHALL BE DETERMINED IN FIELD BY THE CONTRACTOR. GC TO CONTACT DIG-SAFE TO SURVEY AND LOCATE ALL UNDERGROUND UTILITIES AT PROJECT SITE. GC TO IDENTIFY ALL UNDERGROUND UTILITIES AND IF REQUIRED BRING TO THE ATTENTION OF PROJECT SERVICES/ UTILITIES THAT MAY REQUIRE FUTURE ACCESS IN COORDINATION TO PROJECT. GC TO NOTE SITE IS HISTORICAL AND ALL EXISTING UNDERGROUND SCOPE MAY NOT BE FULLY LOCATED AND VERIFIED.
21. GC TO SURVEY EXISTING CLEAN-OUT PUMP STATION VAULT IN ITS ENTIRETY AND COORDINATE WITH PROJECT SLAB AND FOUNDATION WORK FOR FULL COORDINATION TO PROJECT. GC TO IDENTIFY ANY CONFLICT TO PROPOSED PROJECT PRIOR TO COMMENCEMENT OF EXCAVATION.
22. GC TO PROVIDE AND REVIEW ALL CONSTRUCTION SCOPE WITH ZOO INCLUDING SCHEDULE OF ALL DELIVERIES AND REMOVAL OF BUILDING MATERIAL AND COMPLY WITH RWPZ RESTRICTIONS, SECURITY, PARKING, STAFF SIGN-IN, SIGNAGE, NOISE LEVELS AND PROCEDURES DURING ENTIRE PROJECT WITH ZOO PROJECT MANAGEMENT THROUGHOUT ENTIRE PROJECT.
23. SEE STRUCTURAL ENGINEERS DRAWINGS FOR SCOPE ASSOCIATED TO PILES AND UNDER GROUND WORK REQUIRED FOR FOUNDATION/ SLAB AND FOOTINGS FOR NEW BUILDING.
24. SEE SHEETS C1.01 AND A5.01 FOR ADDITIONAL CONCRETE SCOPE / FOOTINGS TO SUPPORT EXTERIOR ENCLOSURE EXHIBIT VERTICAL POST AS PART OF SITE DEMOLITION SCOPE OF WORK.

WORKING NOTES:

1. EXISTING RAILING TO BE REMOVED AND SAVED FOR RE-USE IN NEW LOCATION - SEE SITE PLAN.
2. EXISTING PERIMETER STOCKADE/ PIQUET FENCE TO BE REMOVED AND TURNED OVER TO RWPZ FOR RE-USE BY CLIENT.
3. GC TO REMOVE EXISTING PANDA ENCLOSURE IN ITS ENTIRETY. ALL MECHANICAL EQUIPMENT TO BE TURNED OVER TO RWPZ FOR CLIENT RE-USE. RWPZ WILL NOTIFY GC OF ANY ADDITIONAL SCOPE IN EXISTING ENCLOSURE THAT WILL BE SALVAGED FOR RE-USE BY ZOO.
4. REFER TO S.E. DRAWINGS FOR ADDITIONAL DEMOLITION SCOPE FOR NEW DECK PLATFORM AT VIEWING AREA.
5. GC TO SURVEY EXISTING CLEAN-OUT PUMP STATION VAULT IN ITS ENTIRETY AND COORDINATE AGAINST PROJECT SLAB AND FOUNDATION WORK FOR FULL COORDINATION TO PROJECT. GC TO IDENTIFY AND CONFLICT TO PROPOSED PROJECT PRIOR TO COMMENCEMENT OF EXCAVATION.
6. REMOVE EXISTING TREE TO ACCOMMODATE NEW BUILDING.
7. EXISTING ANIMAL CLIMBING EQUIPMENT TO BE REMOVED AND TURNED OVER TO OWNER FOR RE-USE.
8. EXISTING SEWER AND ELECTRICAL LINES - GC TO SURVEY EXISTING SEWER AND ELECTRICAL LINES IN ITS ENTIRETY AND COORDINATE AGAINST PROJECT SLAB AND FOUNDATION WORK FOR FULL COORDINATION TO PROJECT. GC TO IDENTIFY AND CONFLICT TO PROPOSED PROJECT PRIOR TO COMMENCEMENT OF EXCAVATION.
9. GC TO INSPECT AND REPAIR EXISTING RP/ TIE STEPS TO ACCESS TO LANDSCAPE AREA.
10. GC TO PROTECT EXISTING WALKWAY AND DECK DURING CONSTRUCTION.
11. GC TO INSTALL CONSTRUCTION FENCE 12 FEET FROM WORKING ZONE AND AT WALKWAY AND PERIMETER OF CONSTRUCTION SITE BEFORE COMMENCEMENT - FENCE TO BE FURNISHED BY GC APPROVED BY OWNER. SEE WORKING NOTE # 12 ON SITE PLAN FOR ADDITIONAL INFORMATION.

© 2022 LDL STUDIO INC.

ARCHITECT OF RECORD:
LDL STUDIO
ARCHITECT / HOSPITALITY DESIGNER
LDL STUDIO, INC.
106 Putnam Street
Providence, RI 02909
P: 401.274.4516
F. 401.421.2631
www.ldlstudio.com
Architect of Record: Gary M. Lepore, AIA

CERTIFICATION:
GARY M. LEPORE No. 2750 REGISTERED ARCHITECT

CONSULTANTS:
M/E/P & FP ENGINEER:
HP ENGINEERING CONSULTING ENGINEERS, P.C.
15 MAIDEN LANE
NORTH HAVEN, CT
P: 203-239-9425
JOHN PHILLIPS, P.E.

STRUCTURAL ENGINEER:
AMR ENGINEERING INC.
82 SCENIC DRIVE
WEST WARWICK , RI 02893
P: 401.559.3659
ANTHONY ROTONDO, P.E.

OWNER:
ROGER WILLIAMS PARK ZOO
RHODE ISLAND ZOOLOGICAL ASSOC. FOR THE ROGER WILLIAMS PARK ZOO
1000 ELMWOOD AVENUE
PROVIDENCE
RHODE ISLAND 02907

NUMBER	DATE	DESCRIPTION

REVISIONS:

PROJECT NAME:
RED PANDA EXHIBIT

RWPZ
1000 ELMWOOD AVENUE
PROVIDENCE
RHODE ISLAND 02907

SUBMISSION TYPE: PERMIT SET

PROJECT TYPE: NEW CONSTRUCTION

CLIENT NUMBER: RWPZ 2022_01

ISSUE DATE: NOVEMBER 14, 2022

SHEET NAME: DEMOLITION SITE PLAN

DRAWING SCALE:

PROJECT NUMBER: 2022-03

DATE ISSUED: 11/14/2022

C1.00

ARCHITECTS AIA 2030 CHALLENGE ADOPTER
LDL STUDIO INC. - CELEBRATING 27 YEARS OF AWARD WINNING SERVICE 1995 - 2022
WWW.LDLSTUDIO.COM
IF THIS SHEET IS NOT 24 X 36 IT IS A REDUCED SCALE PRINT - SCALE ACCORDINGLY

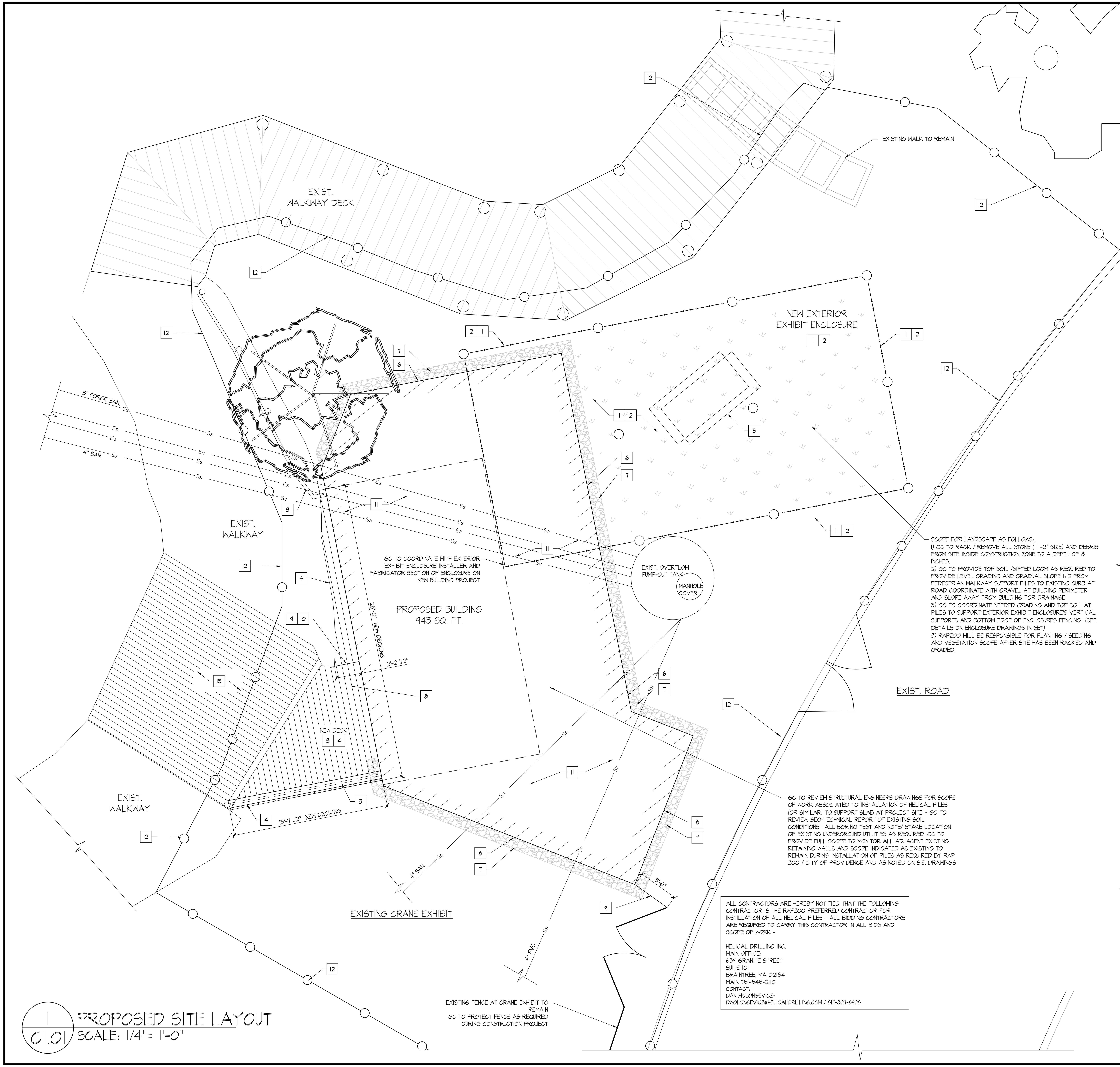

1 / C1.01 PROPOSED SITE LAYOUT
SCALE: 1/4"= 1'-0"

GENERAL NOTES:

1. ALL DEMOLITION WORK SHALL BE PERFORMED IN ACCORDANCE WITH STATE AND LOCAL REGULATIONS.
2. ARRANGE WITH THE OWNER AND/OR APPROPRIATE UTILITIES FOR SERVICE SHUTOFFS BEFORE BEGINNING DEMOLITION OPERATION.
3. TAKE SPECIAL CARE TO CONTROL DUST AND NOSE TO AVOID DISTURBING ZOO ANIMALS. GC TO REVIEW WITH RWPZOO ANIMAL CARE STAFF PROTOCOLS/ STANDARDS FOR WORKING ADJACENT TO ANIMALS PRIOR TO COMMENCEMENT OF PROJECT.
4. WIND BORNE DUST FROM EXPOSED SOIL SURFACES DURING LAND DISTURBING/ CONSTRUCTION ACTIVITIES SHALL BE CONTROLLED WITH FREQUENT WATER IRRIGATION APPLICATIONS AND/ OR CALCIUM CHLORIDE. CALCIUM CHLORIDE SHALL BE APPLIED WITH A MECHANICAL SPREADER IN STRICT ACCORDANCE WITH THE SUPPLIER'S SPECIFIED RATES.
5. INSTALL CATCH BASIN SILT SOCKS IN EXISTING CATCH BASINS ON STREET DOWN STREAM FROM PROJECT AREA PRIOR TO DEMOLITION/ CONSTRUCTION.
6. PROVIDE TEMPORARY CONSTRUCTION FENCING AROUND PERIMETER OF SITE PRIOR TO CONSTRUCTION. SEE WORKING NOTES # 11 AND ON SITE PLAN #12
7. THE CONTRACTOR IS RESPONSIBLE FOR ALL SOIL EROSION AND SEDIMENT CONTROL ON SITE. THE CONTRACTOR IS TO NOTIFY THE DESIGN ENGINEER, THE DIRECTOR OF ZOO FACILITIES, THE CITY ENGINEER AND RI DEPT. OF ENVIRONMENTAL MANAGEMENT AT LEAST 48 HOURS PRIOR TO THE START OF CONSTRUCTION
8. CONTRACTOR TO OBTAIN ALL STATE AND MUNICIPAL APPROVALS PRIOR TO THE START OF CONSTRUCTION.
9. ALL WORK PERFORMED HEREIN SHALL BE GOVERNED BY THE RHODE ISLAND STANDARD SPECIFICATION FOR ROAD AND BRIDGE CONSTRUCTION AND CITY OF PROVIDENCE STANDARD SPECIFICATIONS AND DETAILS.
10. SEQUENCE OF CONSTRUCTION PROVIDED/ SHOWN MAY BE MODIFIED AS FIELD CONDITIONS ARRANT WITH PRIOR APPROVAL FROM THE OWNER OR OWNER'S REPRESENTATIVE.
11. THE CONTRACTOR SHALL COORDINATE WITH ALL OF THE APPROPRIATE UTILITY COMPANIES FOR AGREEMENTS TO SERVICE THE PROPOSED BUILDING. THIS SHALL BE DONE PRIOR TO CONSTRUCTION.
12. THE CONTRACTOR IS RESPONSIBLE FOR DETERMINING FINISH GRADING AND DRAINAGE AROUND THE BUILDING TO ENSURE SURFACE WATER AND/ OR GROUND WATER ARE DIRECTED AWAY FROM THE STRUCTURE.
13. ALL PROPOSED UNDERGROUND UTILITIES SERVING THE SITE AND BUILDINGS TO BE COORDINATED WITH APPLICANT, ARCHITECT AND ENGINEER PRIOR TO INSTALLATION.
14. ALL SITE WORK AND FILL AREAS ARE TO BE DONE UNDER THE DIRECTION OF A GEOTECHINICAL ENGINEER WITH SCHEDULED MONITORING, TESTING AND CERTIFICATION TO BE PROVIDED TO THE APPLICANT AT THE COMPLETION OF THE PROJECT.
15. ALL COMPONENTS OF THE DRAINAGE, SEWER AND WATER SYSTEMS MUST BE AS-BUILT PRIOR TO COVERING. THE THIRD PARTY CONSULTANT UNDER CONTRACT TO RWPZ TO BE NOTIFIED PRIOR TO COVERING TO SURVEY AS-BUILT LOCATIONS. ENGINEER WILL NOT ACCEPT FIELD MEASUREMENTS FROM THE SITE CONTRACTOR.
16. NO STOCKPILING OF MATERIAL TO BE LOCATED IN THE RIGHT OF WAY AND NO OPEN TRENCHES ARE TO BE LEFT OVERNIGHT.
17. ALL LOAM AND USABLE SOIL IN DISTURBED AREAS TO BE STOCKPILED FOR FUTURE USE.
18. ALL EXCESS SOIL, TREES, ROCKS, BOULDERS, AND OTHER REFUSE, SHALL BE DISCARDED OFF SITE IN AN ACCEPTABLE MANNER AT AN APPROVED LOCATION. STUMPS SHALL BE GROUND ONSITE OR REMOVED. NO STUMP DUMPS ARE PROPOSED ON SITE.

19.. ALL EXISTING UTILITIES MUST BE FIELD VERIFIED PRIOR TO START OF PROJECT. INFORMATION SHOWN ARE FROM VISIBLE OBSERVATION, AND OBTAINED FROM DRAWINGS OVER 15 YEARS OLD AND MAY HAVE BEEN CHANGED OR MODIFIED. CLIENT HAS HIRED A 3RD PARTY CONSULTANT TO FIELD VERIFY ALL SITE UTILITIES AND SOIL BEARING CAPACITY. PRIOR TO CONSTRUCTION, THE PROPER UTILITY ENGINEER DEPARTMENTS SHALL BE CONTACTED AND THE ACTUAL LOCATION OF SUBSURFACE STRUCTURES SHALL BE DETERMINED IN FIELD BY THE CONTRACTOR. GC TO CONTACT DIG-SAFE TO SURVEY AND LOCATE ALL UNDERGROUND UTILITIES AT PROJECT SITE. GC TO IDENTIFY ALL UNDERGROUND UTILITIES AND IF REQUIRED BRING TO THE ATTENTION OF PROJECT SERVICES/ UTILITIES THAT MAY REQUIRE FUTURE ACCESS IN COORDINATION TO PROJECT. GC TO NOTE SITE IS HISTORICAL AND ALL EXISTING UNDERGROUND SCOPE MAY NOT BE FULLY LOCATED AND VERIFIED.

19. GC TO SURVEY EXISTING CLEAN-OUT PUMP STATION VAULT IN ITS ENTIRETY AND COORDINATE AGAINST PROJECT PILES, SLAB AND FOUNDATION WORK FOR FULL COORDINATION TO PROJECT. GC TO IDENTIFY AND CONFLICT TO PROPOSED PROJECT PRIOR TO COMMENCEMENT OF EXCAVATION.

20. GC TO PROVIDE AND REVIEW ALL CONSTRUCTION SCOPE WITH ZOO INCLUDING SCHEDULE OF ALL DELIVERIES AND REMOVAL OF BUILDING MATERIAL AND COMPLY WITH RWPZ RESTRICTIONS, SECURITY, PARKING, STAFF SIGN-IN, SIGNAGE, NOISE LEVELS AND PROCEDURES DURING ENTIRE PROJECT WITH ZOO PROJECT MANAGEMENT THROUGHOUT ENTIRE PROJECT.

WORKING NOTES:

1 PROPOSED NEW EXTERIOR EXHIBIT ENCLOSURE. GC TO COORDINATE WITH ENCLOSURE VENDER LISTED BELOW AS REQUIRED WITH OWNERS ENCLOSURE CONSULTANT ANY AND ALL BUILDING/ SITE COORDINATION INCLUDING BUT NOT LIMITED TO IN-WALL BLOCKING AT NEW BUILDING FOR THE INSTALLATION OF EXTERIOR ENCLOSURE SURROUND AT NEW RED PANDA OUTDOOR EXHIBIT.

NETS UNLIMITED Nets Unlimited
20625 NORTH 29TH PLACE
PHOENIX, ARIZONA 85050

TEL: 480-515-1300
WWW.NETSUNLIMITED.COM
CONTACT: BRYAN KATTERMAN

2 EXTERIOR EXHIBIT ENCLOSURE FABRICATION CONSULTANT TO BE CONTACTED AND COORDINATED WITH GC AND RWPZ DURING PROJECT. RWPZ WILL REQUIRE IN CONTRACT BETWEEN GC AND NETS UNLIMITED TO SUBMIT ENCLOSURE FABRICATION SHOP DRAWINGS INCLUDING REVIEW BY RWPZOO STAFF AND THAT ALL CONSTRUCTION AND DESIGN TO BE COORDINATED WITH PROJECT TEAM AND PROJECT GENERAL CONTRACTOR. - REFER TO SHEET A5.01 FOR DETAILS

3 RE-USED RAILING AT NEW DECK/ PLATFORM & VIEWING AREA. LOCATE / DIMENSION TO PROVIDE CONTINUOUS CONNECTION TO EXISTING ADJ. RAILING TO REMAIN AND PROVIDE CONT. RAILING AS REQUIRED TO NEW BUILDING.

4 GC TO FIELD VERIFY COORDINATION TO EDGE OF EXISTING DECK/ RETAINING WALL/ WALKWAY AND TO SEE STRUCTURAL ENG. DRAWINGS FOR DETAILS TO SUPPORT NEW DECK.

5 OUTDOOR ANIMAL CLIMBING EQUIPMENT TO BE FURNISHED BY OWNER.

6 GC TO FURNISH 6 INCHES OF NEW SCREENED LOAN AT 8'-0" BEYOND ALL NEW FOUNDATION EDGES AND TO GRADE RAKE NEW REMAINING OUTDOOR EXHIBIT TO PITCH ALL SURFACES FROM BUILDING TOWARDS SERVICE ROAD.

7 GC TO PROVIDE 12" PERIMETER GRAVEL BED AT EDGE OF SLAB APPROXIMATELY 12 INCHES DEEP TO AIDE IN RAIN WATER MANAGEMENT.

8 ARCHITECT RECOMMENDS REMOVAL OF SOIL BETWEEN EXISTING RETAINING WALL AND NEW BUILDING UNDER PROPOSED NEW DECK - REPLACE WITH 18 INCH COMPACTED GRAVEL TO IMPROVE SITE DRAINAGE AT THIS LOCATION BECAUSE OF LIMITED FUTURE ACCESS TO THIS AREA

9 PROVIDE PICKET FENCE (MATCH EXIST. TO REMAIN AT THIS LOCATION TO PROVIDE COMPLETED CRANE ENCLOSURE)

10 NEW PICKET FENCE SHOULD BE REMOVABLE TO ALLOW LIMITED ACCESS INTO AREA BEYOND

11 EXISTING SEWER AND ELECTRICAL LINES - GC TO SURVEY EXISTING EXISTING SEWER AND ELECTRICAL LINES IN ITS ENTIRETY AND COORDINATE AGAINST PROJECT SLAB AND FOUNDATION WORK FOR FULL COORDINATION TO PROJECT. GC TO IDENTIFY AND CONFLICT TO PROPOSED PROJECT PRIOR TO COMMENCEMENT OF EXCAVATION.

12 GC TO PROVIDE / MAINTAIN PROJECT SECURITY FENCING AND SIGNAGE (PER RWPZOO GUIDELINES / STANDARDS) INDICATING THIS IS AN ACTIVE CONSTRUCTION SITE AND NO TRESPASSING - FENCE SHOULD SURROUND CONSTRUCTION SITE IN ITS ENTIRETY AND BE PROVIDED WITH LOCKABLE GATES AS REQUIRED FOR GC ACCESS - FENCE WILL REMAIN IN PLACE THROUGHOUT ENTER CONSTRUCTION PROCESS AND WILL BE PROVIDED WITH PRIVACY / WINDSCREEN AND WILL NOT BLOCK OR IMPACT EXISTING ZOO VIDEO SURVEILLANCE EQUIPMENT - RWP ZOO WILL CONFIRM LOCATION OF FENCE AND SIGNAGE WITH GC PRIOR TO FINAL INSTALLATION AND LOCATION. RWPZOO MAY REQUEST OWNER SIGNAGE / ANNOUNCEMENT OF FUTURE EXHIBIT BE MOUNTED ON FENCING DURING CONSTRUCTION - GC TO ASSIST RWPZOO WITH ADDING OWNER SIGNAGE TO FENCE IF REQUIRED.

13 REFER TO STRUCTURAL DWG. FOR ADDITIONAL SCOPE OF WORK AT EXISTING WALKWAY.

© 2022 LDL STUDIO INC.

ARCHITECT OF RECORD:
LDL STUDIO
ARCHITECT / HOSPITALITY DESIGNER
LDL STUDIO, INC.
106 Putnam Street
Providence, RI 02909
P: 401.274.4516
F. 401.421.2631
www.ldlstudio.com
Architect of Record: Gary M. Lepore, AIA

CERTIFICATION:
GARY M. LEPORE No. 2750 REGISTERED ARCHITECT

CONSULTANTS:
M/E/P & FP ENGINEER:
HP ENGINEERING CONSULTING ENGINEERS, P.C.
15 MAIDEN LANE
NORTH HAVEN, CT
P: 203-239-9425
JOHN PHILLIPS, P.E.

STRUCTURAL ENGINEER:
AMR ENGINEERING INC.
82 SCENIC DRIVE
WEST WARWICK , RI 02893
P: 401.559.3659
ANTHONY ROTONDO, P.E.

OWNER:
ROGER WILLIAMS PARK ZOO
RHODE ISLAND ZOOLOGICAL ASSOC. FOR THE ROGER WILLIAMS PARK ZOO
1000 ELMWOOD AVENUE
PROVIDENCE
RHODE ISLAND 02907

NUMBER	DATE	DESCRIPTION

REVISIONS:

PROJECT NAME:
RED PANDA EXHIBIT
RWPZ
1000 ELMWOOD AVENUE
PROVIDENCE
RHODE ISLAND 02907

SUBMISSION TYPE: PERMIT SET

PROJECT TYPE: NEW CONSTRUCTION

CLIENT NUMBER: RWPZ 2022_01

ISSUE DATE: NOVEMBER 14, 2022

SHEET NAME: PROPOSED SITE LAYOUT

DRAWING SCALE:

PROJECT NUMBER: 2022-03

DATE ISSUED: 11/14/2022

C1.01

ARCHITECTS AIA 2030 CHALLENGE ADOPTER

LDL STUDIO INC. - CELEBRATING 27 YEARS OF AWARD WINNING SERVICE 1995 - 2022

WWW. LDLSTUDIO.COM

IF THIS SHEET IS NOT 24 X 36 IT IS A REDUCED SCALE PRINT - SCALE ACCORDINGLY

SCALE 3"=1' · SCALE 1-1/2"=1' · SCALE 1"=1' · SCALE 3/4"=1' · SCALE 1/2"=1' · SCALE 1/4"=1' · SCALE 1/8"=1' · SCALE 1/16"=1'

WORKING NOTES:

1	GC TO REVIEW ENGINEERING DRAWINGS IN THIER ENTIRETY. STRUCTURAL ENGINEER DRAWINGS WILL GOVERN ALL SPECIFICATION AND COORDINATION FOR CONCRETE, FOOTINGS, SLAB SCOPE, REBAR WEB REINFORCING AS REQUIRED
2	GC TO REVIEW PLUMBING DRAWINGS FOR LOCATION OF ALL FLOOR DRAINS AND UNDER-SLAB UTILITIES
3	PRIOR TO SETTING ANY / ALL EXCAVATION GC TO REVIEW SITE WITH DIG SAFE AND RWPZOO CIVIL CONSULTANT FOR ALL EXISTING UNDERGROUND UTILITIES AND SERVICES. GC TO PROVIDE FULL COORDINATION OF ALL SLAB WORK AGAINST EXITING CONDITIONS
4	SEE SECTION DETAIL FOR ADDITIONAL SLAB INSULATION AND VAPOR BARRIER AT SLAB / FOOTINGS
5	GC TO COORDINATE WITH CONCRETE/ REBAR SUB-CONTRACTOR LOCATION OF 5/8" O.C. A.B. X 19" L.G. AT 36" THREADED ROD TO BE USED FOR HOLD DOWN AND ANCHORS AS REQUIRED FOR EXTERIOR WALLS PER BUILDING CODE (SEE DETAILS).
6	PROVIDE CONSTRUCTION JOINTS AS REQUIRED BY FOR COLUMN FOOTINGS AND SLAB CHANGE IN DIRECTION TO PREVENT BUILDING MOVEMENT FROM IMPACTING CONCRETE SLAB
7	SLAB INSTALLER TO REVIEW ARCHITECT'S FLOOR FINISH PLAN FOR LOCATION OF FLOOR/ TRENCH DRAINS AND FLOORING MATERIAL DEPTH AND COORDINATION - SLAB WILL NEED TO PROVIDE PITCH TO DRAIN
8	SEE SHEET A5.01 FOR ADDITIONAL CONCRETE WORK ASSOCIATED TO FOOTINGS FOR VERTICAL POST TO SUPPORT EXTERIOR ENCLOSURE EXHIBIT
9	SEE MANUFACTURES SPECIFICATION FOR TRENCH DRAIN & PLUMBING ENGINEERS DRAWINGS FOR INSTALLATION OF ALL DRAINS IN CONCRETE SLAB AS REQUIRED BY MANUFACTURER AND CODE TO MAINTAIN

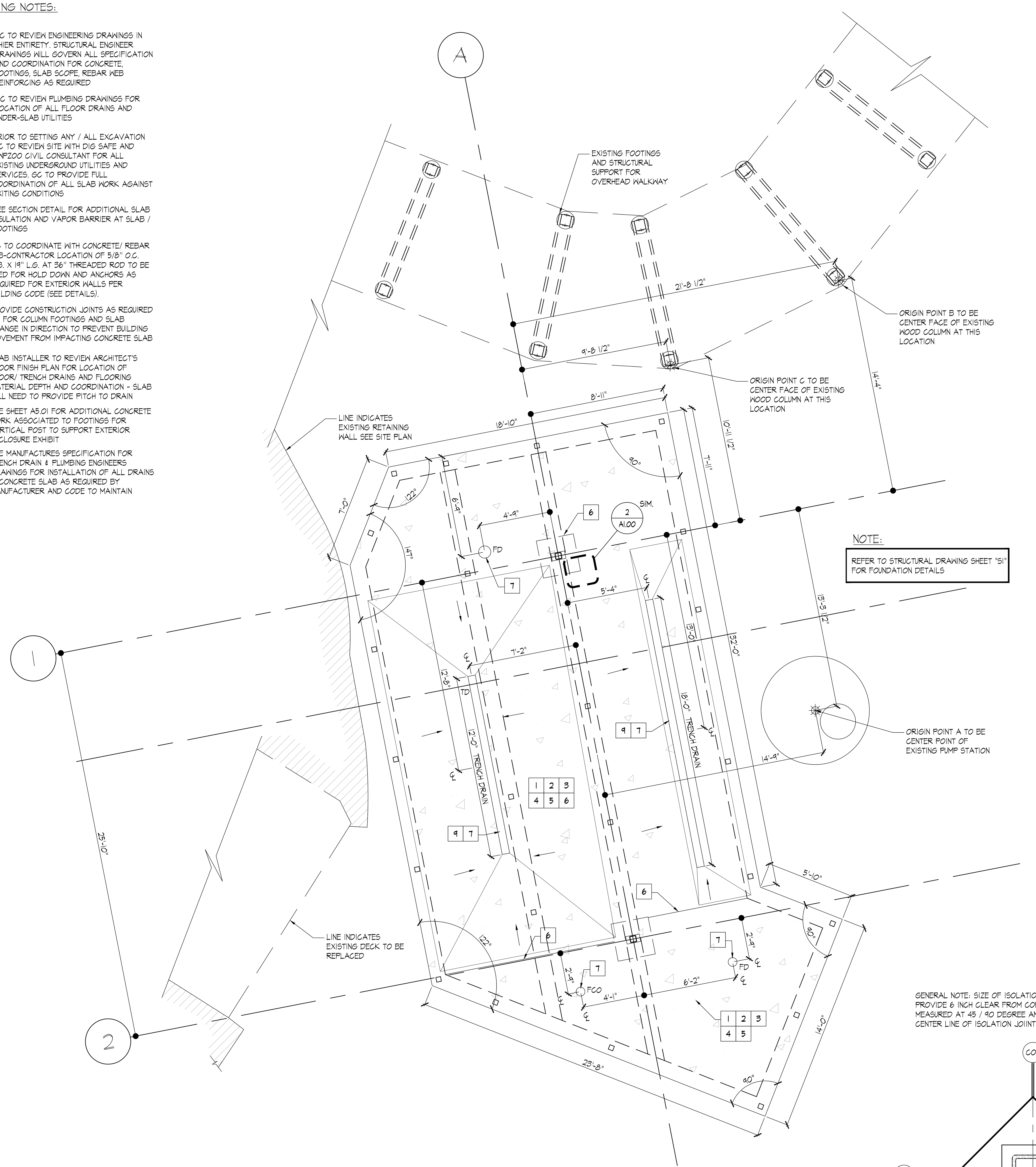

NOTE:

REFER TO STRUCTURAL DRAWING SHEET "S1" FOR FOUNDATION DETAILS

1 / A1.00 PROPOSED SLAB PLAN

SCALE: 1/4"= 1'-0"

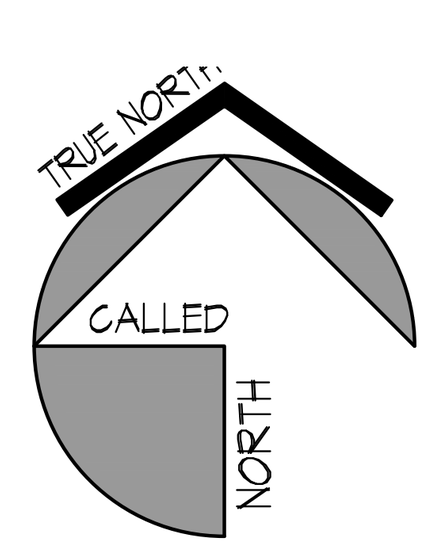

GENERAL NOTE: SIZE OF ISOLATION JOINT TO BE SET AS FOLLOWS: PROVIDE 6 INCH CLEAR FROM CORNER OF BASE PLATE TO JOINT - MEASURED AT 45 / 90 DEGREE ANGLE AT BASE PLATE CORNER TO CENTER LINE OF ISOLATION JOIINT

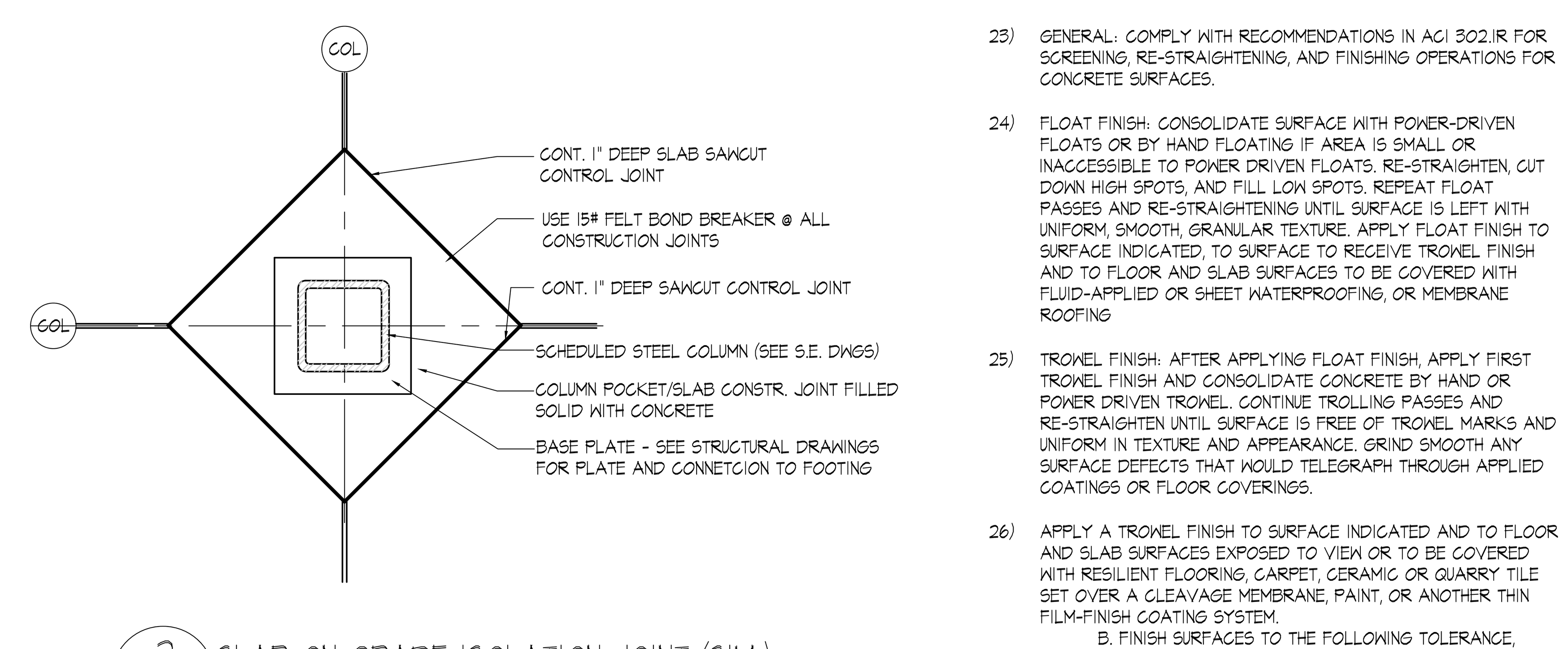

2 / A1.00 SLAB ON GRADE ISOLATION JOINT (SIM.)

SCALE: 1"=1'-0"

GENERAL NOTES

1) THE CONTRACTOR TO REVIEW STRUCTURAL ENGINEER DRAWINGS FOR ALL SLAB / FOOTING SCOPE PRIOR TO COMMENCEMENT OF WORK. THE S.E. DRAWINGS WILL GOVERN ALL SCOPE ASSOCIATED TO SLAB , REBAR AND LOCATION OF CONSTRUCTION JOINTS AND FOOTINGS FOR STRUCTURAL COLUMNS.

2) THE BUILDING SHALL BE FOUNDED ON CONCRETE SLABS, HELICAL PILES AND FOOTINGS, COMPETENT GRANULAR FILL AND NATURAL SOIL. THE DESIGN NET SAFE SOIL BEARING PRESSURE IS 5 KIPS PER SQUARE FOOT UNDER FOOTINGS (TO BE CONFIRMED)

3) THE ESTIMATED ELEVATION OF THE BOTTOMS OF EACH FOOTING/ HELICAL PILE CAP AND FINISHED CONSTRUCTION SLAB WILL BE SET BY CONTRACTOR BASED ON COORDINATION TO SURVEY PROVIDED BY 3RD PARTY CONSULTANT UNDER CONTRACT TO CLIENT. AND APPROVED DEPTH SET BY S.E. / CONTRACTOR AFTER DETERMINATION OF WATER TABLE AND SOIL BEARING CAPACITY.

4) NO BACKFILL WILL BE PLACED AGAINST FOOTINGS/FOUNDATIONS OR SLABS UNTIL AN APPROPRIATE STRENGTH RATIO HAS BEEN ACHIEVED AND OR STRUCTURAL ELEMENTS ARE SUFFICIENTLY BRACED TO PREVENT MOVEMENT OR STRUCTURAL DAMAGE.

5) FOR SLAB GRADE CONSTRUCTION PROVIDES A 6 MIL POLYETHYLENE MEMBRANE VAPOR BARRIER WITH 10" JOINT OVERLAP IN DIRECT CONTACT TO SLAB AND 6" MINIMUM BASE COURSES WASHED GRAVEL BED AND PROPERLY COMPACTED CLEAN SCREENED FILL OVER PROPERLY PREPARED SUB-GRADE.

6) A GEO-TECHNICAL REPORT WILL BE FILLED FOR ALL FNDTION WORK BY CONTRACTOR. CONTRACTOR WILL PROVIDE 2 INDEPENDENT 6" CORE SAMPLES OF CONCRETE MIX TO BE TESTED FOR CONFIRMATION OF SPECIFIED CONCRETE MIX. SEE S.E. DRAWINGS

7) ALL CONCRETE SHALL HAVE A MINIMUM COMPRESSIVE STRENGTH OF 4000 PSI AT 28 DAYS.

8) ALL REINFORCING BARS SHALL CONFORM TO ASTM A615, GRADE 60 (DEFORMED), EXCEPT ASTM A706 WHERE WELDED.

9) LAP ALL CONTINUOUS BARS IN ACCORDANCE WITH THE "DEVELOPMENT LENGTH AND SPLICE TABLE" AS REQ. BY STATE CODE AND GOOD PRACTICE.

10) ALL WELDED WIRE FABRIC (WWF) SHALL CONFORM TO THE ASTM 615. LAP 2 SQUARES AT ALL JOINTS AND TIE @ 3'-0" ON CENTER.

11) CLEAN CONCRETE PROTECTION FOR REINFORCING (UNLESS OTHERWISE NOTED)
A. FOOTINGS 3" C. SLAB-ON-GRADE" 1" TOP
B. FOUNDATION WALLS 2" D: PIERS & PILASTER: 2" TO TIES

12) NO BARS SHALL BE CUT OR OMITTED IN THE FIELD BECAUSE OF SLEEVES, RECESSES, CONDUIT, AND PIPING. BARS MAY BE MOVED ASIDE WITHOUT CHANGE IN LEVEL.

13) NO PIPES SHALL PASS THROUGH THE CONCRETE WITHOUT THE PERMISSION OF THE ARCHITECT & PROJECT STRUCTURAL ENGINEER. STEEL PIPE SLEEVES SHALL BE PROVIDED AND SPACED A MINIMUM OF 3 PIPE DIAMETERS APART.

14) ALL CONDUITS SHALL BE RUN ABOVE BOTTOM REINFORCEMENTS: BELOW TOP REINFORCING AND INSIDE BEAM STIRRUPS AND WALL REINFORCING. LINES OF CONDUIT SHALL BE SPACED NOT CLOSER THAN THREE CONDUIT DIAMETERS ON CENTER. MAXIMUM SIZE OF CONDUIT IN SLAB SHALL BE EQ. TO 1/3 OF THE SLAB OR WALL THICKNESS.

15) KEYS TO BE 2" BY 4" W/ BEVELED SIDES (UNLESS NOTED)

16) HORIZONTAL CONSTRUCTION JOINTS SHALL BE AS INDICATED ON THE DRAWINGS. ALL CONSTRUCTION JOINTS SHALL BE FORMED WITH A STANDARD KEY AND ALL REINFORCING EXTENDED IN ACCORDANCE WITH THE DEVELOPMENT LENGTH AND SPLICE TABLE.

17) THE CONTRACTOR SHALL SUBMIT DRAWINGS SHOWING THE COMPLETE LAYOUTS OF ALL CONTROL JOINTS, CONSTRUCTION JOINTS, AND ISOLATION JOINTS FOR SLABS-ON-GRADE CONCRETE. PLACEMENT SHALL NOT PROCEED UNTIL THESE DRAWINGS HAVE BEEN RECEIVED BY STRUCTURAL ENGINEER & ARCHITECT.

18) DETAILS NOT SHOWN ON THE DRAWINGS SHALL BE IN ACCORDANCE WITH THE LATEST EDITION OF THE ACI DETAILING MANUAL 315.

19) SITE GRADING DRAWING TO BE SUBMITTED & REVIEWED BY ARCHITECT. GC TO CONFIRM ALL GRADING TO PITCH AWAY FROM BUILDING.

20) CONTRACTOR TO PROVIDE INDEPENDENT TESTING (SLUMP/COMPRESSION), RESULTS FROM TESTING AGENCIES TO OWNER VERIFYING CONCRETE.

21) GC & ALL OTHER TRADES TO COORDINATE ALL M/E/P, TRENCH, DRAIN SLOPES, & ANY OTHER SLAB WORK PRIOR TO POURING CONCRETE FOOTINGS AND SLAB.

22) GC TO COORDINATE WITH ALL SITE UTILITIES FINAL CONNECTIONS AND REQUIRED TRANSITIONS TO BUILDING SERVICE PRIOR TO INSTALL BACK FILL.

23) GENERAL: COMPLY WITH RECOMMENDATIONS IN ACI 302.1R FOR SCREENING, RE-STRAIGHTENING, AND FINISHING OPERATIONS FOR CONCRETE SURFACES.

24) FLOAT FINISH: CONSOLIDATE SURFACE WITH POWER-DRIVEN FLOATS OR BY HAND FLOATING IF AREA IS SMALL OR INACCESSIBLE TO POWER DRIVEN FLOATS. RE-STRAIGHTEN, CUT DOWN HIGH SPOTS, AND FILL LOW SPOTS. REPEAT FLOAT PASSES AND RE-STRAIGHTENING UNTIL SURFACE IS LEFT WITH UNIFORM, SMOOTH, GRANULAR TEXTURE. APPLY FLOAT FINISH TO SURFACE INDICATED, TO SURFACE TO RECEIVE TROWEL FINISH AND TO FLOOR AND SLAB SURFACES TO BE COVERED WITH FLUID-APPLIED OR SHEET WATERPROOFING, OR MEMBRANE ROOFING

25) TROWEL FINISH: AFTER APPLYING FLOAT FINISH, APPLY FIRST TROWEL FINISH AND CONSOLIDATE CONCRETE BY HAND OR POWER DRIVEN TROWEL. CONTINUE TROLLING PASSES AND RE-STRAIGHTEN UNTIL SURFACE IS FREE OF TROWEL MARKS AND UNIFORM IN TEXTURE AND APPEARANCE. GRIND SMOOTH ANY SURFACE DEFECTS THAT WOULD TELEGRAPH THROUGH APPLIED COATINGS OR FLOOR COVERINGS.

26) APPLY A TROWEL FINISH TO SURFACE INDICATED AND TO FLOOR AND SLAB SURFACES EXPOSED TO VIEW OR TO BE COVERED WITH RESILIENT FLOORING, CARPET, CERAMIC OR QUARRY TILE SET OVER A CLEAVAGE MEMBRANE, PAINT, OR ANOTHER THIN FILM-FINISH COATING SYSTEM.
B. FINISH SURFACES TO THE FOLLOWING TOLERANCE, MEASURED WITHIN 24 HOURS ACCORDING TO ASTM E 1155/E 1155M FOR A RANDOMLY TRAFFICKED FLOOR SURFACE
1. SPECIFIED OVERALL VALUES OF FLATNESS, F(F) 30; AND LEVELNESS, F(L) 20; WITH MINIMUM LOCAL VALUES OF FLATNESS, F(F) 24; AND LEVELNESS F(L) 15; FOR SUSPENDED SLABS.

GENERAL NOTES CONT:

27. THESE DRAWINGS HAVE BEEN COMPILED FROM THE BEST AVAILABLE INFORMATION AND ARE NOT INTENDED TO LIMIT THE SCOPE OF THE WORK. THE CONTRACTOR MAY ENCOUNTER HIDDEN OR COVERED CONDITIONS, NOT INDICATED IN THESE DOCUMENTS, REQUIRING THE CONTRACTOR TO PROVIDE ADDITIONAL WORK FOR THE COMPLETION OF HIS OR HER CONTRACT. IT WILL BE ASSUMED THAT THE CONTRACTOR HAS INSPECTED THE SITE PRIOR TO BIDDING AND VERIFIED THE INFORMATION SUPPLIED HEREIN.

28. GC TO FIELD VERIFY ALL DIMENSIONS PRIOR TO CONSTRUCTION. GC TO NOTE ALL DISCREPANCIES WITH OWNER AND ARCHITECT PRIOR TO CONSTRUCTION.

29. GC & ALL SUB CONTRACTOR TO FIELD VERIFY DIMENSIONS PRIOR TO CONSTRUCTION. GC TO NOTE ALL DISCREPANCIES WITH OWNER AND ARCHITECT PRIOR TO CONSTRUCTION.

30. ELECTRICAL SUB CONTRACTOR TO VERIFY ELECTRICAL SUPPLY AVAILABLE. GC TO COORDINATE AVAILABLE ELECTRICAL POWER WITH ALL TRADES, INCLUDING MECHANICAL / PLUMBING EQUIPMENT.

31. PLUMBING SUB CONTRACTOR TO VERIFY WATER AND SEWER REQUIREMENTS. GC TO COORDINATE AVAILABLE SERVICE WITH ALL TRADES, INCLUDING WATER FILTER SYSTEMS FOR ANIMAL DRINKING WATER

32. GC TO REVIEW WITH ZOO IF LIGHTING/ FIRE ALARM SYSTEM IS TO BE COORDINATE AND TIE-IN TO MAIN SECURITY / ALARM SYSTEM FOR ENTIRE ZOO AS REQUIRED BY OWNER.

33. GC TO REVIEW ALL M/E/P EQUIPMENT SPECIFICATIONS AND CUT SHEETS FOR SCOPE OF MECHANICAL, ELECTRICAL AND PLUMBING COORDINATION AS REQUIRED.

34. GC TO COORDINATE INSTALLATION OF ALL MILLWORK WITH PLUMBER AND ELECTRICIAN TO CONFIRM SCOPE OF SERVICES REQUIRED.

35. GC MUST INSPECT ALL SUBSTRATES PER MANUFACTURERS' REQUIRED SURFACE TREATMENT TO MAINTAIN ALL FINISH FLOOR WARRANTIES AND INSTALLATION GUIDELINES.

36. GC TO REVIEW EQUIPMENT CUT SHEET FOR SCOPE OF WORK FOR ALL AUDIO/VISUAL/TELEVISIONS VIDEO MONITORING SYSTEMS FURNISHED BY OWNERS TO DETERMINE REQUIREMENTS.

37. GC AND ALL OTHER TRADES TO COORDINATE ALL MEP, TRENCH, DRAIN SLOPES & ANY OTHER SLAB WORK PRIOR TO THE START OF ANY EXCAVATING OR SLAB WORK.

38. GC TO COORDINATE ALL FLOOR PENETRATIONS WITH EQUIPMENT PLANS FOR LOCATION OF FLOOR SINKS, FLOOR DRAINS & TRENCH DRAINS. DRAIN LOCATIONS TO BE FINALIZED BY COORDINATION WITH EQUIPMENT REQUIREMENTS.

39. ALL CONSTRUCTION SHALL CONFORM TO ALL GOVERNING CODES AND ORDINANCES UNDER WHICH THEY ARE PERFORMED.

40. OWNER REQUEST THAT ALL APPLIED WALL FINISHES (I.E. FRP) BE INSTALLED WITH PREMIUM CARE TO REDUCE MOLD BEHIND PANEL AS PRIORITY - ZOO HAS ISSUES WITH MOLD THROUGHOUT PROPERTY

41. THE GENERAL CONTRACTOR SHALL LAY OUT ALL WORK AND BE RESPONSIBLE FOR ALL LINES, GRADES AND ELEVATIONS AND MEASUREMENTS OF THE BUILDING.

42. ALL DIMENSIONS ARE TAKEN TO FACE OF FRAMING UNLESS OTHERWISE NOTED.

43. PROVIDE 5/8" DENS-SHIELD MOISTURE RESISTANT WALL BOARD SHEATHING AND 5/8" CEMENT BOARD (KITCHEN ONLY) AT ALL WET LOCATIONS (WET LOCATIONS INCLUDE KITCHEN AND BATHROOMS.

44. ALL PENETRATIONS THROUGH RATED WALL ASSEMBLIES TO BE TREATED WITH AN APPROVED "FIRESTOP" MATERIAL TO MEET THE SPECIFIED WALL CONSTRUCTION (TYP).

45. G.C. SHALL COORDINATE ALL FLOORS PITCH TO DRAINS.

46. ALL WOOD IN CONTACT WITH CONCRETE SHALL BE PRESSURE TREATED.

47. OPEN

48. FIGURED DIMENSIONS TAKE PRECEDENCE OVER SCALED DRAWINGS, EXCEPT WHERE NOTED.

49. THE GENERAL CONTRACTOR SHALL COORDINATE ALL STRUCTURAL, MECHANICAL & FIRE PROTECTION SYSTEMS PRIOR TO THE START OF CONSTRUCTION.

50. CONTACT "DIG-SAFE" BEFORE ANY EXCAVATION.

51. THE ELECTRICAL CONTRACTOR SHALL COORDINATE WITH THE OWNER ALL LOCATIONS FOR RECEPTACLES, CABLE & TELEPHONE PRIOR TO THE START OF CONSTRUCTION NOT IDENTIFIED IN THESE DOCUMENTS.

52. ALL GYP BOARD WALLS CEILINGS, SOFFITS, HEADERS, ETC. TO BE TAPED, JOINT COMPOUND APPLIED AND THEN SANDED TO A SMOOTH FINISH PRIOR TO APPLYING ANY FINAL FINISH.

53. ALL EXPOSED MECHANICAL GRILLS, DIFFUSERS, ETC. ARE TO BE PAINTED TO MATCH ADJACENT AREAS.

54. THE GENERAL CONTRACTOR SHALL COORDINATE WITH THE OWNER, ARCHITECT AND ELECTRICAL CONTRACTOR ALL PROPOSED BUILDING SIGNAGE AND ELECTRICAL REQUIREMENTS.

© 2022 LDL STUDIO INC.

ARCHITECT OF RECORD:

LDL STUDIO

ARCHITECT / HOSPITALITY DESIGNER

LDL STUDIO, INC.
106 Putnam Street
Providence, RI 02909
P: 401.274.4516
F. 401.421.2631
www.ldlstudio.com

Architect of Record: Gary M. Lepore, AIA

CERTIFICATION:

GARY M. LEPORE No. 2750 REGISTERED ARCHITECT

CONSULTANTS:

M/E/P & FP ENGINEER:
HP ENGINEERING CONSULTING ENGINEERS, P.C.
15 MAIDEN LANE
NORTH HAVEN, CT
P: 203-239-9425
JOHN PHILLIPS, P.E.

STRUCTURAL ENGINEER:
AMR ENGINEERING INC.
82 SCENIC DRIVE
WEST WARWICK , RI 02893
P: 401.559.3659
ANTHONY ROTONDO, P.E.

OWNER:

ROGER WILLIAMS PARK ZOO

RHODE ISLAND ZOOLOGICAL ASSOC.
FOR THE ROGER WILLIAMS PARK ZOO

1000 ELMWOOD AVENUE
PROVIDENCE
RHODE ISLAND 02907

NUMBER	DATE	DESCRIPTION

REVISIONS:

PROJECT NAME:

RED PANDA EXHIBIT

RWPZ
1000 ELMWOOD AVENUE
PROVIDENCE
RHODE ISLAND 02907

SUBMISSION TYPE: PERMIT SET

PROJECT TYPE: NEW CONSTRUCTION

CLIENT NUMBER: RWPZ 2022_01

ISSUE DATE: NOVEMBER 14, 2022

SHEET NAME: PROPOSED SLAB PLAN

DRAWING SCALE:

PROJECT NUMBER: 2022-03

DATE ISSUED: 11/14/2022

A1.00

GREEN LDL STUDIO GOALS

ARCHITECTS AIA 2030 CHALLENGE ADOPTER
LDL STUDIO INC. - CELEBRATING 27 YEARS OF AWARD WINNING SERVICE 1995 - 2022
WWW.LDLSTUDIO.COM
IF THIS SHEET IS NOT 24 X 36 IT IS A REDUCED SCALE PRINT - SCALE ACCORDINGLY

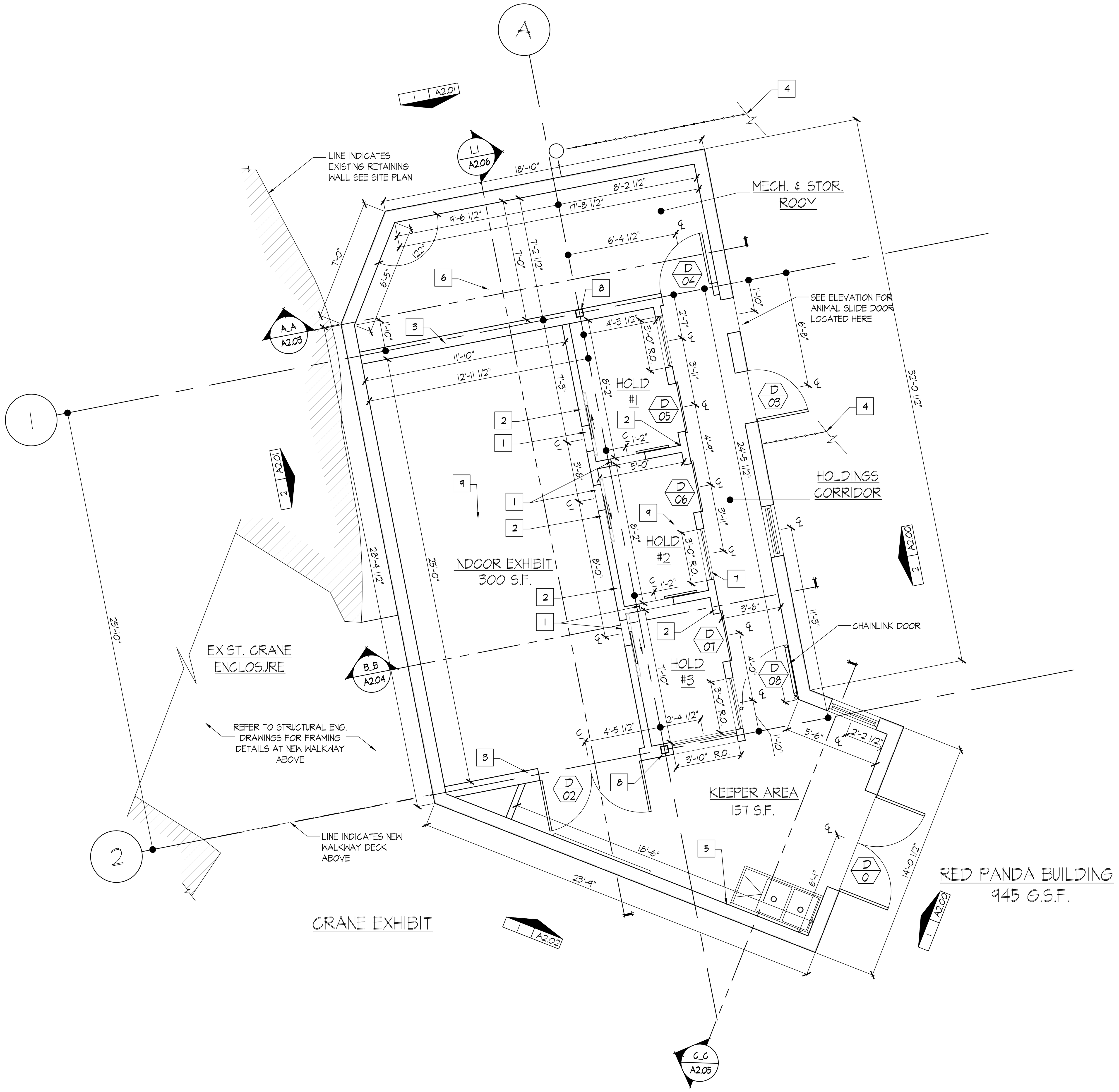

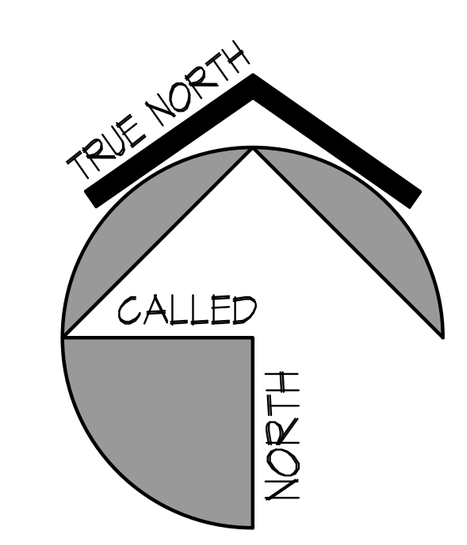

1 / A1.01 PORPOSED GROUND FLOOR PLAN
SCALE: 1/4"= 1'-0"

WORKING NOTES:

1. ANIMAL SLIDING DOORS TO BE INSTALLED BY DOOR VENDER. GC TO COORDINATE WITH DOOR VENDER LISTED BELOW FOR ADDITIONAL REQUIREMENT.

   JEFF SMITH
   OPERATIONS MANAGER
   CORNERS LIMITED
   CELL: 269-207-0088
2. SEE DETAIL D ON SHEET A2.04 FOR PARTITION SECTION. NOTE PARTITIONS BETWEEN HOLDING ROOMS TO BE FABRICATED SIMILAR TO DETAIL
3. SEE DETAIL D ON SHEET A2.06 FOR PARTITION SECTION DETAIL HERE
4. GC TO COORDINATE WITH EXTERIOR ENCLOSURE CONSULTANT FOR SCOPE REQUIRED TO EXTEND ENCLOSURE ONTO ROOF / BUILDING - GC TO PROVIDE BLOCKING AS REQUIRED. ENCLOSURE WILL NOT IMPACT ROOF WARRANTY - SECURE TO WALL IF NECESSARY
5. G.C. TO PROVIDE ADDITIONAL IN-WALL BLOCKING AT SHELVING LOCATIONS - SEE DRAWING FOR LOCATION OF ALL WALL SHELVING
6. G.C. TO REVIEW ALL M/E/P REQUIREMENTS THAT MAY NEED SCOPE TO PROVIDE SERVICE OR DRAINAGE PRIOR TO COMPLETION OF FINAL FINISHES -
7. SEE DETAILS FOR NEW SLAB WORK AND CURB AT ADDITION
8. SEE S.E. DRAWINGS FOR SIZE OF COLUMN AND BASE PLATE HERE
9. SEE DRAWING A1.05 FOR ALL SCHEDULED FLOORING SCOPE AND LOCATION - GC TO COORDINATE ALL SUBSTRATES FOR NEW FLOORING

GENERAL NOTES:

1. THESE DRAWINGS HAVE BEEN COMPILED FROM THE BEST AVAILABLE INFORMATION AND ARE NOT INTENDED TO LIMIT THE SCOPE OF THE WORK. THE CONTRACTOR MAY ENCOUNTER HIDDEN OR COVERED CONDITIONS, NOT INDICATED IN THESE DOCUMENTS, REQUIRING THE CONTRACTOR TO PROVIDE ADDITIONAL WORK FOR THE COMPLETION OF HIS OR HER CONTRACT. IT WILL BE ASSUMED THAT THE CONTRACTOR HAS INSPECTED THE SITE PRIOR TO BIDDING AND VERIFIED THE INFORMATION SUPPLIED HEREIN.
2. GC IS TO VERIFY ALL EXISTING CONDITIONS PRIOR TO ANY WORK, ANY DISCREPANCIES ARE TO BE REPORTED TO THE ARCHITECT AND OWNER PRIOR TO CONSTRUCTION.
3. GC TO COORDINATE ALL FLOOR PENETRATIONS WITH ARCHITECTURAL PLANS FOR LOCATION OF SINKS, FLOOR DRAINS, DRAIN LOCATIONS TO BE FINALIZED BY COORDINATION WITH FIXTURE REQUIREMENTS AND LOCATION OF SERVICES.
4. ALL WOOD IN CONTACT WITH CONCRETE SHALL BE PRESSURE TREATED.
5. ALL DIMENSIONS ARE TAKEN TO FACE OF FINISH UNLESS OTHERWISE NOTED.
6. FIGURED DIMENSIONS TAKE PRECEDENCE OVER SCALED DRAWINGS, EXCEPT WHERE NOTED.
7. THE ELECTRICAL CONTRACTOR SHALL COORDINATE WITH THE GENERAL CONTRACTOR, AND OWNER ALL PROPOSED LOCATIONS FOR RECEPTACLES, CABLE & TELEPHONE AND VIDEO MONITORING DEVICES PRIOR TO THE START OF CONSTRUCTION AND RELOCATE AS REQUIRED TO FULLY COMPLETE THE SCOPE OF WORK.
8. GC / ELECTRICAL SUB-CONTRACTOR TO REVIEW WITH OWNER / ARCHITECT ALL SPEAKER AND TELEVISION SPECIFICATIONS AND LOCATIONS FOR SCOPE OF BLOCKING , ELECTRICAL AND TEL/DATA COORDINATION AS REQUIRED.
9. GC / HVAC SUB CONTRACTOR TO REVIEW ALL PROPOSED HVAC SYSTEMS (SEE MECHANICAL ENGINEERING DRAWINGS) ALL DUCT DISTRIBUTION ROUTES TO BE ISOLATED/ WRAPPED TO PREVENT VIBRATION/ NOISE FOR ANIMAL CARE. ALL SUPPLY AND RETURN REGISTERS WILL BE REPLACED / NEW REGISTERS / FILTERS REQUIRED ON ALL SYSTEMS. REVIEW WITH RWP ZOO ANY ADDITIONAL REQUIREMENTS FOR FILTERS AND OR SECURITY OF ALL DUCTS AND REGISTERS FOR ANIMAL CARE.
10. GC TO PROVIDE SAMPLE OF ALL STAINS / PAINTS AND FINISHES FOR REVIEW AND APPROVAL BY ARCHITECT. GC COMPANY WILL PROVIDE 2 COORDINATION MEETINGS WITH ARCHITECT TO REVIEW ALL SCOPE OF WORK AND TO ALLOW ARCHITECT TO REVIEW PRELIMINARY SHOP DRAWINGS BEFORE FINAL SHOP DRAWINGS ARE ISSUED FOR REVIEW BY LDL STUDIO INC.
11. ALL SUBSTRATES SCHEDULED TO RECEIVE NEW FINISHES WILL BE CLEANED, PATCHED AND REPAIRED TO RECEIVE NEW MATERIAL SO AS TO MAINTAIN MANUFACTURERS WARRANTIES ON NEW MATERIAL. RWPZOO HAS STANDING PRIORITY FOR ALL SUBSTRATES TO BE FURNISHED WITH MOLD RESISTANT MATERIAL TO PREVENT REDUCE MOLD IN ANIMAL BUILDINGS.
12. GC TO COORDINATE ALL MATERIAL CLASSIFICATIONS FOR FIRE CODE AND MATERIAL CLEANING GUIDELINES FOR TURNOVER TO OWNER.
13. HVAC / ELECTRICAL / PLUMBER FABRICATOR TO SUBMIT SHOP DRAWINGS FOR REVIEW AND APPROVAL PRIOR TO FABRICATION.
14. GC & MECHANICAL SUB CONTRACTOR TO FIELD VERIFY DIMENSIONS PRIOR TO CONSTRUCTION. GC TO NOTE ALL DISCREPANCIES WITH OWNER AND ARCHITECT PRIOR TO CONSTRUCTION.
15. OPEN
16. PROVIDE 5/8" DENS-SHIELD MOISTURE RESISTANT WALL BOARD SHEATHING AT ALL WET LOCATIONS AND CEMENT BOARD AT ALL TILE LOCATIONS
17. GC TO REVIEW EQUIPMENT CUT SHEET FOR SCOPE OF WORK FOR ALL AUDIO/VISUAL/TELEVISIONS/VIDEO MONITORING FURNISHED BY OWNER TO DETERMINE ALL REQUIREMENTS.
18. OMIT WALL BOARD SHEATHING AND APPLIED WALL FINISH ON THE CHASE SIDE OF ALL WALLS
19. ALL PENETRATIONS THROUGH RATED WALL ASSEMBLIES TO BE TREATED WITH AN APPROVED "FIRESTOP" MATERIAL TO MEET THE SPECIFIED WALL CONSTRUCTION (TYP).
20. G.C. SHALL COORDINATE ALL SLAB AND FLOORS PITCH TO NEW DRAINS.
21. FIGURED DIMENSIONS TAKE PRECEDENCE OVER SCALED DRAWINGS, EXCEPT WHERE NOTED.
22. ALL GYP BOARD WALLS CEILINGS, SOFFITS, HEADERS, ETC. TO BE TAPED, JOINT COMPOUND APPLIED AND THEN SANDED TO A SMOOTH FINISH PRIOR TO APPLYING ANY FINAL FINISH.
23. IT SHALL BE THE GENERAL CONTRACTOR'S RESPONSIBILITY AS COORDINATOR TO CHECK ALL DIMENSIONS AND DETAILS ON SHOP DRAWINGS BEFORE SUBMISSION TO THE ARCHITECT.
24. THE GENERAL CONTRACTOR SHALL PROTECT ALL EXISTING RETAINING WALLS, OVERHEAD WALKWAYS , SITE FENCING DURING ALL CONSTRUCTION PHASES.
25. ALL MECHANICAL GRILLS, ACCESS PANELS, DIFFUSERS, SWITCH/OUTLET PLATES, ETC. ARE TO RECEIVE FINISHES TO MATCH ADJACENT AREAS UNLESS NOTED OTHERWISE.
26. REFER TO INTERIOR ELEVATIONS FOR COORDINATING SHELVING, EQUIPMENT MOUNTING BRACKETS, TELEVISIONS, ACCESSORIES, FIXTURE LOCATIONS, ETC AND PROVIDE FIRE TREATED IN-WALL BLOCKING AS REQUIRED.
27. ALL RECEPTACLES AND SWITCHES PLATES SHALL BE FLUSH MOUNTED FOR ALL AREAS, UNLESS OTHERWISE NOTED. ELECTRICIAN TO SUBMIT SAMPLE OF RECEPTACLE AND SWITCH PLATE COLOR FOR APPROVAL BY ARCHITECT. ELECTRICIAN TO PROVIDE GFCI OUTLETS AT ALL WET LOCATIONS AND KEEPER AREA AS REQUIRED.
28. ALL PLUMBING PIPING SHALL BE COORDINATED WITH OTHER DISCIPLINES, INCLUDING MECHANICAL DUCTWORK, LIGHTING FIXTURES, CONDUITS AND STRUCTURE, PRIOR TO PIPING INSTALLATION.
29. THE GENERAL CONTRACTOR SHALL LAY OUT ALL WORK AND BE RESPONSIBLE TO VERIFY ALL DIMENSIONS & DETAILS PRIOR TO STARTING CONSTRUCTION.
30. THE GENERAL CONTRACTOR SHALL REVIEW AND COORDINATE WITH ALL RELEVANT STRUCTURAL, MECHANICAL, ELECTRICAL, PLUMBING, & FIRE PROTECTION SCOPE PRIOR TO THE START OF CONSTRUCTION.
31. THE CONTRACTOR SHALL COORDINATE AND VERIFY WITH THE OWNER ALL PROPOSED INDOOR EXHIBIT CLIMBING AND ANIMAL SUPPORT EQUIPMENT TO BE INSTALLED BY OWNER - GC TO COORDINATE ADDITIONAL AND NECESSARY BLOCKING / FRAMING TO SUPPORT INSTALLATION OF ALL ANIMAL CARE EQUIPMENT AND CLIMBING APPARATUS
32. THE CONTRACTOR / MILLWORK COMPANY SHALL COORDINATE AND VERIFY WITH OWNER ALL LOCATIONS OF TEL/DATA PORTS OR CABLING FOR EQUIPMENT. GC TO COORDINATE WITH RWP ZOO ALL NECESSARY SECURITY AND ACCESS CODE DEVICES TO BE INSTALLED
33. ALL CONCEALED IN-WALL BLOCKING SHALL BE FIRE TREATED.
34. THE GENERAL CONTRACTOR SHALL REVIEW ALL WORK INDICATED AS "EXISTING TO REMAIN" WITHIN PROJECT TO CONFIRM, THAT IT IS IN GOOD WORKING ORDER AND ACCEPTABLE. IF ITEMS DO NOT WORK OR ARE NOT CODE COMPLIANT TO CURRENT STATE BUILDING CODE, IT SHALL BE THE RESPONSIBILITY OF THE CONTRACTOR TO CALL OWNERS ATTENTION TO ITEM OR FAILURE.
35. GC TO REVIEW NEW FIRE ALARM / SECURITY SYSTEM TO COORDINATE TIE-IN TO EXISTING ZOO SYSTEM AS REQUIRED BY OWNER. IF NEW SPRINKLER SYSTEM WILL BE REQUIRED BY AHJ FOR BUILDING. ALL ALARM SYSTEMS TO BE TIED INTO NEW SPRINKLER SYSTEM AS REQUIRED BY RI FIRE CODE. FIRE DEPT.
36. GC WILL PROVIDE STRUCTURAL COLUMN AND BEAM/ FRAMING INFORMATION FROM SUPPLIER TO PROJECT STRUCTURAL ENGINEER FOR REVIEW AND APPROVAL.
37. GC TO REVIEW ALL PROJECT ENGINEERING DRAWINGS ISSUED AS PART OF INSTRUMENTS OF SERVICE. GC TO IDENTIFY ANY CONFLICTS OR COORDINATION ISSUES WITHIN DRAWINGS PRIOR TO COMMENCEMENT OF WORK.
38. ALL INTERIOR WALL PARTITIONS WILL BE TYPE "A" UNLESS INDICATED BY TAG. SEE PARTITION SCHEDULE.
39. PLUMBING SUB CONTRACTOR TO VERIFY WATER AND SEWER REQUIREMENTS. GC TO COORDINATE AVAILABLE SERVICE WITH ALL TRADES, INCLUDING NELSON WATER FITLER EQUIPMENT. WHEN POSSIBLE PLUMBING SUBCONTRACTOR TO REUSE ALL UNDERSLAB UTILITY RUNS AND ROUTES - GC AND PLUMBING SUBCONTRACTOR TO LIMIT TO AS NEEDED ALL SLAB CUTS FOR PLUMBING SEWER LINES.
40. PROVIDE WATER SAVING DEVICES, AS REQUIRED BY CODE, TO ALL PLUMBING FIXTURES/ SCHEDULED AS NEW / ALL EXISITNG DEVISES INDICATED FOR RE-USE WILL BE CLEANED AND PATCH/REPAIR FOR RE-USE AS REQUIRED
41. ALL WORK SHALL BE INSTALLED IN ACCORDANCE WITH THE REQUIREMENTS OF THE LATEST STATE, FEDERAL, COUNTY AND LOCAL CODES INCLUDING ALL SUPPLEMENTS AND/OR ADDITIONS.
42. GC TO CONFIRM ALL FLOORING MATERIAL ADHESIVES WILL SUCCEED IN MOIST CONDITIONS. GC TO CONFIRM WITH REPRESENTATIVES RECOMMENDED PRODUCT FOR SITE APPLICATION.
43. ALL FF&E ITEMS PROVIDED BY GC SHALL BE ORDERED IN A TIMELY MANNER SO AS NOT TO AFFECT CONSTRUCTION SCHEDULE.
44. GC TO COORDINATE ALL MATERIAL CLASSIFICATIONS FOR FIRE CODE & MATERIAL CLEANING GUIDELINES FOR TURNOVER TO OWNER.

40. GC TO REVIEW AND EXAMINE ALL NEW ROOF PENETRATIONS TO CONFIRM WATER TIGHT SEAL AND INSTALL NEEDED FLASHING AS REQUIRED TO PREVENT LEAKS - NEW ROOF TO BE INSTALLED AS REQUIRED FOR A 25 YEAR WARRANTY. GC / ROOFING CONTRACTOR / OWNER/ ARCHITECT TO DETERMINE BEST POSSIBLE SYSTEM TO BE INSTALLED AND MAX. FLASHING REQUIREMENTS FOR A 25 YEAR WARRANTY TO ROOF.

© 2022 LDL STUDIO INC.

ARCHITECT OF RECORD:
LDL STUDIO
ARCHITECT / HOSPITALITY DESIGNER
LDL STUDIO, INC.
106 Putnam Street
Providence, RI 02909
P: 401.274.4516
F. 401.421.2631
www.ldlstudio.com
Architect of Record: Gary M. Lepore, AIA

CERTIFICATION:

CONSULTANTS:
M/E/P & FP ENGINEER:
HP ENGINEERING CONSULTING ENGINEERS, P.C.
15 MAIDEN LANE
NORTH HAVEN, CT
P: 203-239-9425
JOHN PHILLIPS, P.E.

STRUCTURAL ENGINEER:
AMR ENGINEERING INC.
82 SCENIC DRIVE
WEST WARWICK , RI 02893
P: 401.559.3659
ANTHONY ROTONDO, P.E.

OWNER:
ROGER WILLIAMS PARK ZOO
RHODE ISLAND ZOOLOGICAL ASSOC.
FOR THE ROGER WILLIAMS PARK ZOO
1000 ELMWOOD AVENUE
PROVIDENCE
RHODE ISLAND 02907

NUMBER	DATE	DESCRIPTION

REVISIONS:

PROJECT NAME:
RED PANDA EXHIBIT

RWPZ
1000 ELMWOOD AVENUE
PROVIDENCE
RHODE ISLAND 02907

SUBMISSION TYPE: PERMIT SET

PROJECT TYPE: NEW CONSTRUCTION

CLIENT NUMBER: RWPZ 2022_01

ISSUE DATE: NOVEMBER 14, 2022

SHEET NAME: PROPOSED GROUND FLOOR PLAN

DRAWING SCALE:

PROJECT NUMBER: 2022-03

DATE ISSUED: 11/14/2022

A1.01

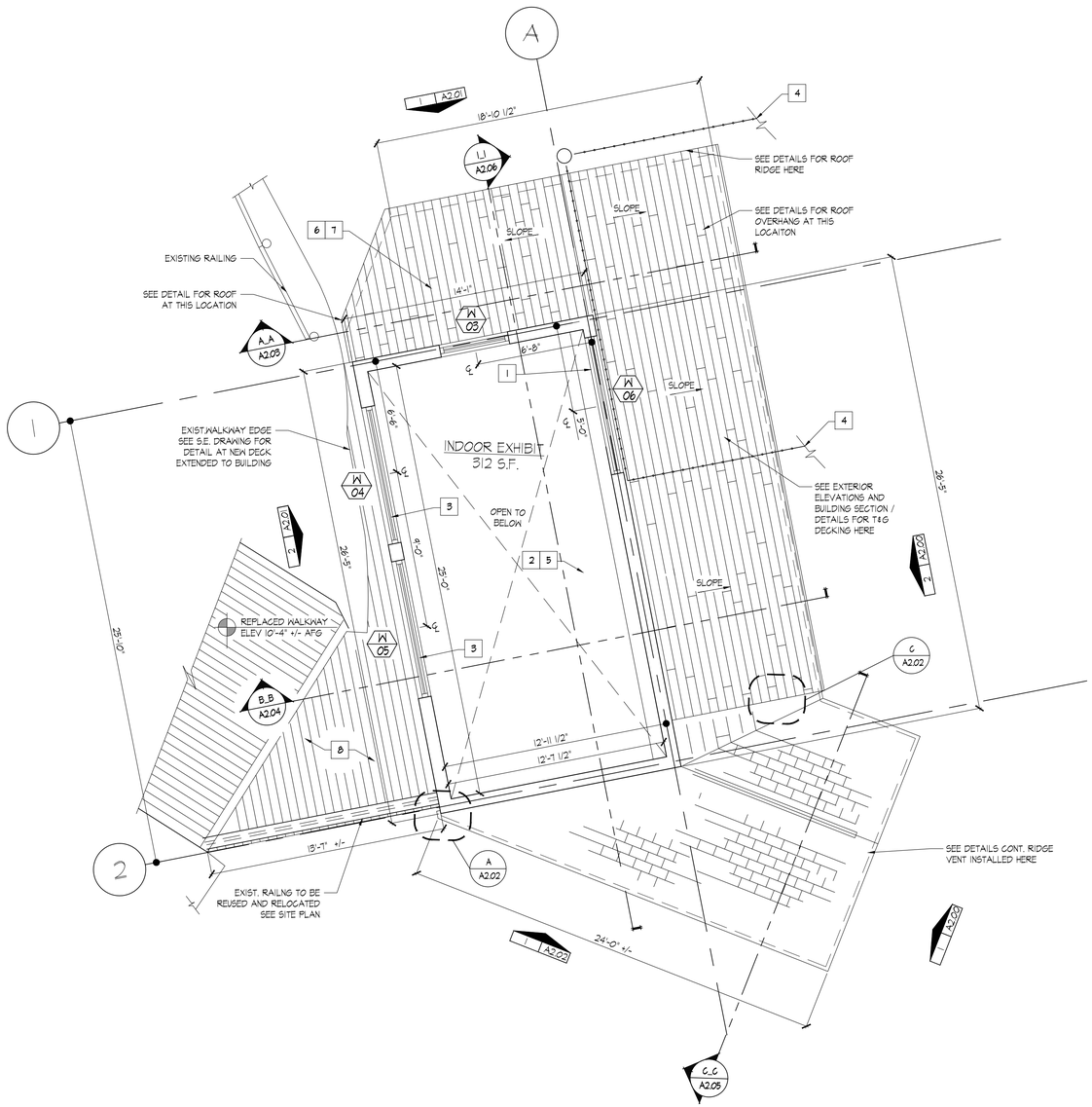

1 / A1.02 PROPOSED LEVEL 1 FLOOR PLAN

SCALE: 1/4"= 1'-0"

WORKING NOTES:

1. SEE DETAIL FOR ANIMAL SLIDING DOOR AT THIS LOCATION DOOR TO BE PURCHASED AS PART OF SYSTEM. SEE INTERIOR ELEVATION AND CEILING PLAN FOR ADDITIONAL DOORS
2. SEE INTERIOR ELEVATIONS FOR ALL FINISHES AND LOCATION OF ANIMAL ACCESS DOORS IN THIS EXHIBIT SPACE
3. SEE DETAIL FOR ADDITIONAL INDOOR SHADES AT THESE WINDOWS
4. GC TO COORDINATE WITH EXTERIOR ENCLOSURE CONSULTANT FOR SCOPE REQUIRED TO EXTEND ENCLOSURE ONTO ROOF / BUILDING - GC TO PROVIDE BLOCKING AS REQUIRED. ENCLOSURE WILL NOT IMPACT ROOF WARRANTY - SECURE TO WALL IF NECESSARY
5. G.C. TO PROVIDE ADDITIONAL IN-WALL BLOCKING SEE RWPZOO FOR SCOPE OF WORK ASSOCIATED TO ANIMAL CLIMBING APPARATUS TO BE LOCATED IN EXHIBIT
6. G.C. TO REVIEW ALL M/E/P REQUIREMENTS THAT MAY NEED ROOF PENETRATIONS - GC TO COORDINATE PENETRATION WITH ROOF DETAIL TO CONFIRM NO LEAKS / AND SECURE/ WATERPROOF MEMBRANE - PROVIDE ADDITIONAL PREFABRICATED FLASHING CAPS IF REQUIRED TO MAINTAIN 25 YEAR WARRANTY AT ROOF
7. SEE CONSTRUCTION DETAILS FOR FABRICATION OF ROOF AT THIS LOCATION
8. REFER TO STRUCTURAL ENG. DRAWINGS FOR FRAMING DETAILS AT NEW WALKWAY



GENERAL NOTES:

1. THESE DRAWINGS HAVE BEEN COMPILED FROM THE BEST AVAILABLE INFORMATION AND ARE NOT INTENDED TO LIMIT THE SCOPE OF THE WORK. THE CONTRACTOR MAY ENCOUNTER HIDDEN OR COVERED CONDITIONS, NOT INDICATED IN THESE DOCUMENTS, REQUIRING THE CONTRACTOR TO PROVIDE ADDITIONAL WORK FOR THE COMPLETION OF HIS OR HER CONTRACT. IT WILL BE ASSUMED THAT THE CONTRACTOR HAS INSPECTED THE SITE PRIOR TO BIDDING AND VERIFIED THE INFORMATION SUPPLIED HEREIN.
2. GC IS TO VERIFY ALL EXISTING CONDITIONS PRIOR TO ANY WORK, ANY DISCREPANCIES ARE TO BE REPORTED TO THE ARCHITECT AND OWNER PRIOR TO CONSTRUCTION.
3. GC TO COORDINATE ALL FLOOR PENETRATIONS WITH ARCHITECTURAL PLANS FOR LOCATION OF SINKS, FLOOR DRAINS, DRAIN LOCATIONS TO BE FINALIZED BY COORDINATION WITH FIXTURE REQUIREMENTS AND LOCATION OF SERVICES.
4. ALL WOOD IN CONTACT WITH CONCRETE SHALL BE PRESSURE TREATED.
5. ALL DIMENSIONS ARE TAKEN TO FACE OF FINISH UNLESS OTHERWISE NOTED.
6. FIGURED DIMENSIONS TAKE PRECEDENCE OVER SCALED DRAWINGS, EXCEPT WHERE NOTED.
7. THE ELECTRICAL CONTRACTOR SHALL COORDINATE WITH THE GENERAL CONTRACTOR, AND OWNER ALL PROPOSED LOCATIONS FOR RECEPTACLES, CABLE & TELEPHONE AND VIDEO MONITORING DEVICES PRIOR TO THE START OF CONSTRUCTION AND RELOCATE AS REQUIRED TO FULLY COMPLETE THE SCOPE OF WORK.
8. GC / ELECTRICAL SUB-CONTRACTOR TO REVIEW WITH OWNER / ARCHITECT ALL SPEAKER AND TELEVISION SPECIFICATIONS AND LOCATIONS FOR SCOPE OF BLOCKING , ELECTRICAL AND TEL/DATA COORDINATION AS REQUIRED.
9. GC / HVAC SUB CONTRACTOR TO REVIEW ALL PROPOSED HVAC SYSTEMS (SEE MECHANICAL ENGINEERING DRAWINGS) ALL DUCT DISTRIBUTION ROUTES TO BE ISOLATED/ WRAPPED TO PREVENT VIBRATION/ NOISE FOR ANIMAL CARE. ALL SUPPLY AND RETURN REGISTERS WILL BE REPLACED / NEW REGISTERS / FILTERS REQUIRED ON ALL SYSTEMS. REVIEW WITH RWP ZOO ANY ADDITIONAL REQUIREMENTS FOR FILTERS AND OR SECURITY OF ALL DUCTS AND REGISTERS FOR ANIMAL CARE.
10. GC TO PROVIDE SAMPLE OF ALL STAINS / PAINTS AND FINISHES FOR REVIEW AND APPROVAL BY ARCHITECT. GC COMPANY WILL PROVIDE 2 COORDINATION MEETINGS WITH ARCHITECT TO REVIEW ALL SCOPE OF WORK AND TO ALLOW ARCHITECT TO REVIEW PRELIMINARY SHOP DRAWINGS BEFORE FINAL SHOP DRAWINGS ARE ISSUED FOR REVIEW BY LDL STUDIO INC.
11. ALL SUBSTRATES SCHEDULED TO RECEIVE NEW FINISHES WILL BE CLEANED, PATCHED AND REPAIRED TO RECEIVE NEW MATERIAL SO AS TO MAINTAIN MANUFACTURERS WARRANTIES ON NEW MATERIAL. RWPZOO HAS STANDING PRIORITY FOR ALL SUBSTRATES TO BE FURNISHED WITH MOLD RESISTANT MATERIAL TO PREVENT REDUCE MOLD IN ANIMAL BUILDINGS.
12. GC TO COORDINATE ALL MATERIAL CLASSIFICATIONS FOR FIRE CODE AND MATERIAL CLEANING GUIDELINES FOR TURNOVER TO OWNER.
13. HVAC / ELECTRICAL / PLUMBER FABRICATOR TO SUBMIT SHOP DRAWINGS FOR REVIEW AND APPROVAL PRIOR TO FABRICATION.
14. GC & MECHANICAL SUB CONTRACTOR TO FIELD VERIFY DIMENSIONS PRIOR TO CONSTRUCTION. GC TO NOTE ALL DISCREPANCIES WITH OWNER AND ARCHITECT PRIOR TO CONSTRUCTION.
15. OPEN
16. PROVIDE 5/8" DENS-SHIELD MOISTURE RESISTANT WALL BOARD SHEATHING AT ALL WET LOCATIONS AND CEMENT BOARD AT ALL TILE LOCATIONS
17. GC TO REVIEW EQUIPMENT CUT SHEET FOR SCOPE OF WORK FOR ALL AUDIO/VISUAL/TELEVISIONS/VIDEO MONITORING FURNISHED BY OWNER TO DETERMINE ALL REQUIREMENTS.
18. OMIT WALL BOARD SHEATHING AND APPLIED WALL FINISH ON THE CHASE SIDE OF ALL WALLS
19. ALL PENETRATIONS THROUGH RATED WALL ASSEMBLIES TO BE TREATED WITH AN APPROVED "FIRESTOP" MATERIAL TO MEET THE SPECIFIED WALL CONSTRUCTION (TYP).
20. G.C. SHALL COORDINATE ALL SLAB AND FLOORS PITCH TO NEW DRAINS.
21. FIGURED DIMENSIONS TAKE PRECEDENCE OVER SCALED DRAWINGS, EXCEPT WHERE NOTED.
22. ALL GYP BOARD WALLS CEILINGS, SOFFITS, HEADERS, ETC. TO BE TAPED, JOINT COMPOUND APPLIED AND THEN SANDED TO A SMOOTH FINISH PRIOR TO APPLYING ANY FINAL FINISH.
23. IT SHALL BE THE GENERAL CONTRACTOR'S RESPONSIBILITY AS COORDINATOR TO CHECK ALL DIMENSIONS AND DETAILS ON SHOP DRAWINGS BEFORE SUBMISSION TO THE ARCHITECT.
24. THE GENERAL CONTRACTOR SHALL PROTECT ALL EXISTING RETAINING WALLS, OVERHEAD WALKWAYS , SITE FENCING DURING ALL CONSTRUCTION PHASES.
25. ALL MECHANICAL GRILLS, ACCESS PANELS, DIFFUSERS, SWITCH/OUTLET PLATES, ETC. ARE TO RECEIVE FINISHES TO MATCH ADJACENT AREAS UNLESS NOTED OTHERWISE.
26. REFER TO INTERIOR ELEVATIONS FOR COORDINATING SHELVING, EQUIPMENT MOUNTING BRACKETS, TELEVISIONS, ACCESSORIES, FIXTURE LOCATIONS, ETC AND PROVIDE FIRE TREATED IN-WALL BLOCKING AS REQUIRED.
27. ALL RECEPTACLES AND SWITCHES PLATES SHALL BE FLUSH MOUNTED FOR ALL AREAS, UNLESS OTHERWISE NOTED. ELECTRICIAN TO SUBMIT SAMPLE OF RECEPTACLE AND SWITCH PLATE COLOR FOR APPROVAL BY ARCHITECT. ELECTRICIAN TO PROVIDE GFCI OUTLETS AT ALL WET LOCATIONS AND KEEPER AREA AS REQUIRED.
28. ALL PLUMBING PIPING SHALL BE COORDINATED WITH OTHER DISCIPLINES, INCLUDING MECHANICAL DUCTWORK, LIGHTING FIXTURES, CONDUITS AND STRUCTURE, PRIOR TO PIPING INSTALLATION.
29. THE GENERAL CONTRACTOR SHALL LAY OUT ALL WORK AND BE RESPONSIBLE TO VERIFY ALL DIMENSIONS & DETAILS PRIOR TO STARTING CONSTRUCTION.
30. THE GENERAL CONTRACTOR SHALL REVIEW AND COORDINATE WITH ALL RELEVANT STRUCTURAL, MECHANICAL, ELECTRICAL, PLUMBING, & FIRE PROTECTION SCOPE PRIOR TO THE START OF CONSTRUCTION.
31. THE CONTRACTOR SHALL COORDINATE AND VERIFY WITH THE OWNER ALL PROPOSED INDOOR EXHIBIT CLIMBING AND ANIMAL SUPPORT EQUIPMENT TO BE INSTALLED BY OWNER - GC TO COORDINATE ADDITIONAL AND NECESSARY BLOCKING / FRAMING TO SUPPORT INSTALLATION OF ALL ANIMAL CARE EQUIPMENT AND CLIMBING APPARATUS
32. THE CONTRACTOR / MILLWORK COMPANY SHALL COORDINATE AND VERIFY WITH OWNER ALL LOCATIONS OF TEL/DATA PORTS OR CABLING FOR EQUIPMENT. GC TO COORDINATE WITH RWP ZOO ALL NECESSARY SECURITY AND ACCESS CODE DEVICES TO BE INSTALLED
33. ALL CONCEALED IN-WALL BLOCKING SHALL BE FIRE TREATED.
34. THE GENERAL CONTRACTOR SHALL REVIEW ALL WORK INDICATED AS "EXISTING TO REMAIN" WITHIN PROJECT TO CONFIRM, THAT IT IS IN GOOD WORKING ORDER AND ACCEPTABLE. IF ITEMS DO NOT WORK OR ARE NOT CODE COMPLIANT TO CURRENT STATE BUILDING CODE, IT SHALL BE THE RESPONSIBILITY OF THE CONTRACTOR TO CALL OWNERS ATTENTION TO ITEM OR FAILURE
35. GC TO REVIEW NEW FIRE ALARM / SECURITY SYSTEM TO COORDINATE TIE-IN TO EXISTING ZOO SYSTEM AS REQUIRED BY OWNER. IF NEW SPRINKLER SYSTEM WILL BE REQUIRED BY AHJ FOR BUILDING, ALL ALARM SYSTEMS TO BE TIED INTO NEW SPRINKLER SYSTEM AS REQUIRED BY RI FIRE CODE, FIRE DEPT.
36. GC WILL PROVIDE STRUCTURAL COLUMN AND BEAM/ FRAMING INFORMATION FROM SUPPLIER TO PROJECT STRUCTURAL ENGINEER FOR REVIEW AND APPROVAL.
37. GC TO REVIEW ALL PROJECT ENGINEERING DRAWINGS ISSUED AS PART OF INSTRUMENTS OF SERVICE. GC TO IDENTIFY ANY CONFLICTS OR COORDINATION ISSUES WITHIN DRAWINGS PRIOR TO COMMENCEMENT OF WORK.
38. ALL INTERIOR WALL PARTITIONS WILL BE TYPE "A" UNLESS INDICATED BY TAG. SEE PARTITION SCHEDULE.
39. PLUMBING SUB CONTRACTOR TO VERIFY WATER AND SEWER REQUIREMENTS. GC TO COORDINATE AVAILABLE SERVICE WITH ALL TRADES, INCLUDING NELSON WATER FITLER EQUIPMENT. WHEN POSSIBLE PLUMBING SUBCONTRACTOR TO REUSE ALL UNDERSLAB UTILITY RUNS AND ROUTES - GC AND PLUMBING SUBCONTRACTOR TO LIMIT TO AS NEEDED ALL SLAB CUTS FOR PLUMBING SEWER LINES.
40. PROVIDE WATER SAVING DEVICES, AS REQUIRED BY CODE, TO ALL PLUMBING FIXTURES/ SCHEDULED AS NEW / ALL EXISITNG DEVISES INDICATED FOR RE-USE WILL BE CLEANED AND PATCH/REPAIR FOR RE-USE AS REQUIRED
41. ALL WORK SHALL BE INSTALLED IN ACCORDANCE WITH THE REQUIREMENTS OF THE LATEST STATE, FEDERAL, COUNTY AND LOCAL CODES INCLUDING ALL SUPPLEMENTS AND/OR ADDITIONS.
42. GC TO CONFIRM ALL FLOORING MATERIAL ADHESIVES WILL SUCCEED IN MOIST CONDITIONS. GC TO CONFIRM WITH REPRESENTATIVES RECOMMENDED PRODUCT FOR SITE APPLICATION.
43. ALL FF&E ITEMS PROVIDED BY GC SHALL BE ORDERED IN A TIMELY MANNER SO AS NOT TO AFFECT CONSTRUCTION SCHEDULE.
44. GC TO COORDINATE ALL MATERIAL CLASSIFICATIONS FOR FIRE CODE & MATERIAL CLEANING GUIDELINES FOR TURNOVER TO OWNER.
45. GC TO REVIEW AND EXAMINE ALL NEW ROOF PENETRATIONS TO CONFIRM WATER TIGHT SEAL AND INSTALL NEEDED FLASHING AS REQUIRED TO PREVENT LEAKS - NEW ROOF TO BE INSTALLED AS REQUIRED FOR A 25 YEAR WARRANTY. GC / ROOFING CONTRACTOR / OWNER/ ARCHITECT TO DETERMINE BEST POSSIBLE SYSTEM TO BE INSTALLED AND MAX. FLASHING REQUIREMENTS FOR A 25 YEAR WARRANTY TO ROOF.

© 2022 LDL STUDIO INC.

ARCHITECT OF RECORD:
LDL STUDIO
ARCHITECT / HOSPITALITY DESIGNER
LDL STUDIO, INC.
106 Putnam Street
Providence, RI 02909
P: 401.274.4516
F. 401.421.2631
www.ldlstudio.com
Architect of Record: Gary M. Lepore, AIA

CERTIFICATION:

CONSULTANTS:

M/E/P & FP ENGINEER:
HP ENGINEERING CONSULTING ENGINEERS, P.C.
15 MAIDEN LANE
NORTH HAVEN, CT
P: 203-239-9425
JOHN PHILLIPS, P.E.

STRUCTURAL ENGINEER:
AMP ENGINEERING INC.
82 SCENIC DRIVE
WEST WARWICK , RI 02893
P: 401.559.3659
ANTHONY ROTONDO, P.E.

OWNER:
RHODE ISLAND ZOOLOGICAL ASSOC. FOR THE ROGER WILLIAMS PARK ZOO
1000 ELMWOOD AVENUE
PROVIDENCE
RHODE ISLAND 02907

NUMBER	DATE	DESCRIPTION

REVISIONS:

PROJECT NAME:
RED PANDA EXHIBIT
RWPZ
1000 ELMWOOD AVENUE
PROVIDENCE
RHODE ISLAND 02907

SUBMISSION TYPE:
PERMIT SET

PROJECT TYPE:
NEW CONSTRUCTION

CLIENT NUMBER:
RWPZ 2022_01

ISSUE DATE: NOVEMBER 14, 2022

SHEET NAME:
PROPOSED LEVEL 1 FLOOR PLAN

DRAWING SCALE:

PROJECT NUMBER:
2022-03

DATE ISSUED:
11/14/2022

A1.02

IF THIS SHEET IS NOT 24 X 36 IT IS A REDUCED SCALE PRINT - SCALE ACCORDINGLY

WWW.LDLSTUDIO.COM LDL STUDIO INC. - CELEBRATING 27 YEARS OF AWARD WINNING SERVICE 1995 - 2022 ARCHITECTS AIA 2030 CHALLENGE ADOPTER

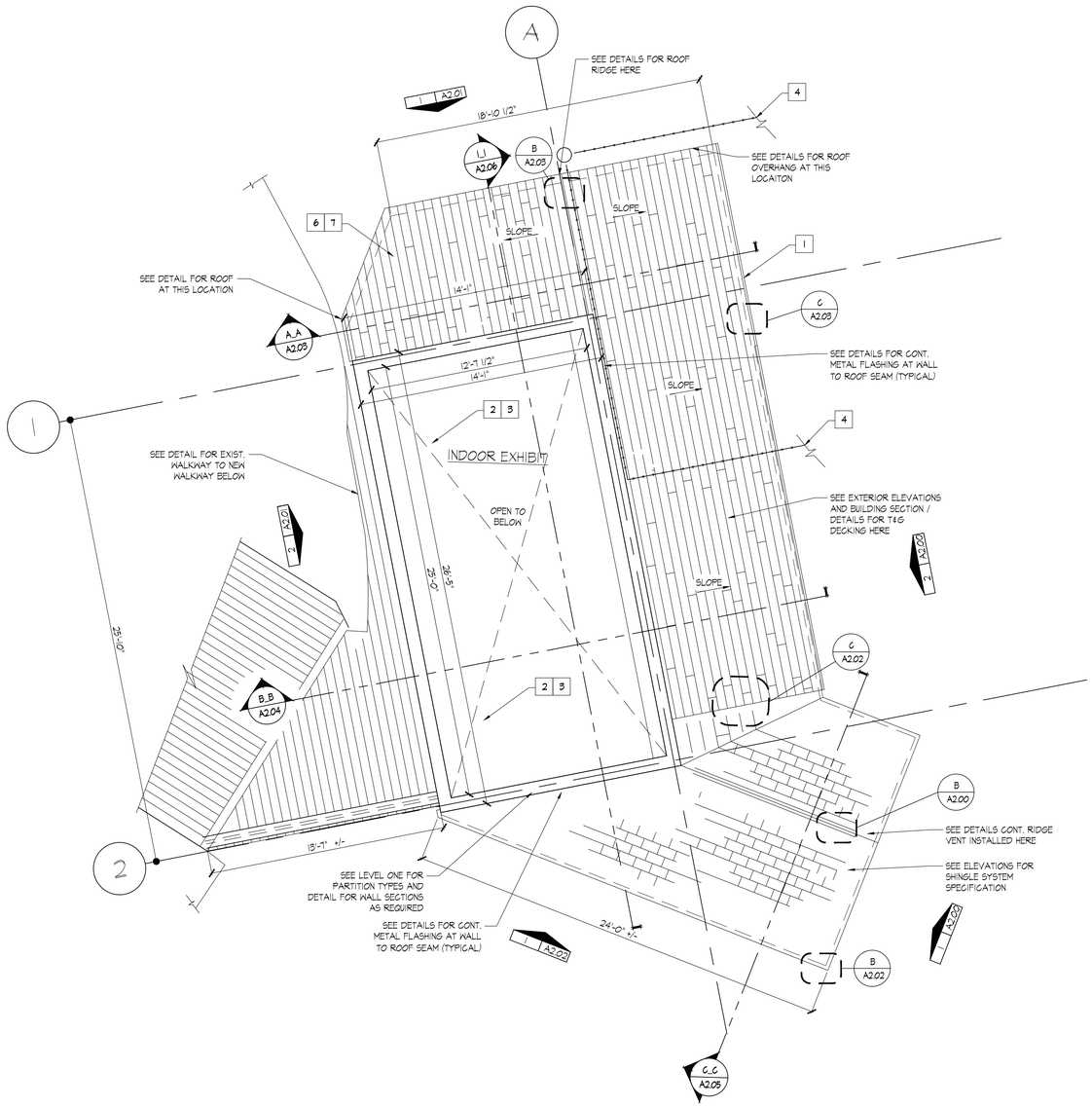

1 / A1.03 PROPOSED LOWER LEVEL ROOF PLAN
SCALE: 1/4"= 1'-0"



WORKING NOTES:

1. SEE DETAIL FOR ANIMAL SLIDING DOOR AT THIS LOCATION DOOR TO BE PURCHASED AS PART OF SYSTEM. SEE INTERIOR ELEVATION AND CEILING PLAN FOR ADDITIONAL DOORS
2. SEE INTERIOR ELEVATIONS FOR ALL FINISHES AND LOCATION OF ANIMAL ACCESS DOORS IN THIS EXHIBIT SPACE
3. G.C. TO PROVIDE ADDITIONAL IN-WALL BLOCKING SEE RWPZOO FOR SCOPE OF WORK ASSOCIATED TO ANIMAL CLIMBING APPARATUS TO BE LOCATED IN EXHIBT
4. GC TO COORDINATE WITH EXTERIOR ENCLOSURE CONSULTANT FOR SCOPE REQUIRED TO EXTEND ENCLOSURE ONTO ROOF / BUILDING - GC TO PROVIDE BLOCKING AS REQUIRED. ENCLOSURE WILL NOT IMPACT ROOF WARRANTY - SECURE TO WALL IF NECESSARY
5. OPEN
6. G.C. TO REVIEW ALL M/E/P REQUIREMENTS THAT MAY NEED ROOF PENETRATIONS - GC TO COORDINATE PENETRATION WITH ROOF DETAIL TO CONFIRM NO LEAKS / AND SECURE/ WATERPROOF MEMBRANE - PROVIDE ADDITIONAL PREFABRICATED FLASHING CAPS IF REQUIRED TO MAINTAIN 25 YEAR WARRANTY AT ROOF
7. SEE CONSTRUCTION DETAILS FOR FABRICATION OF ROOF AT THIS LOCATION

GENERAL NOTES:

1. THESE DRAWINGS HAVE BEEN COMPILED FROM THE BEST AVAILABLE INFORMATION AND ARE NOT INTENDED TO LIMIT THE SCOPE OF THE WORK. THE CONTRACTOR MAY ENCOUNTER HIDDEN OR COVERED CONDITIONS, NOT INDICATED IN THESE DOCUMENTS, REQUIRING THE CONTRACTOR TO PROVIDE ADDITIONAL WORK FOR THE COMPLETION OF HIS OR HER CONTRACT. IT WILL BE ASSUMED THAT THE CONTRACTOR HAS INSPECTED THE SITE PRIOR TO BIDDING AND VERIFIED THE INFORMATION SUPPLIED HEREIN.
2. GC IS TO VERIFY ALL EXISTING CONDITIONS PRIOR TO ANY WORK, ANY DISCREPANCIES ARE TO BE REPORTED TO THE ARCHITECT AND OWNER PRIOR TO CONSTRUCTION.
3. GC TO COORDINATE ALL FLOOR PENETRATIONS WITH ARCHITECTURAL PLANS FOR LOCATION OF SINKS, FLOOR DRAINS, DRAIN LOCATIONS TO BE FINALIZED BY COORDINATION WITH FIXTURE REQUIREMENTS AND LOCATION OF SERVICES.
4. ALL WOOD IN CONTACT WITH CONCRETE SHALL BE PRESSURE TREATED.
5. ALL DIMENSIONS ARE TAKEN TO FACE OF FINISH UNLESS OTHERWISE NOTED.
6. FIGURED DIMENSIONS TAKE PRECEDENCE OVER SCALED DRAWINGS, EXCEPT WHERE NOTED.
7. THE ELECTRICAL CONTRACTOR SHALL COORDINATE WITH THE GENERAL CONTRACTOR, AND OWNER ALL PROPOSED LOCATIONS FOR RECEPTACLES, CABLE & TELEPHONE AND VIDEO MONITORING DEVICES PRIOR TO THE START OF CONSTRUCTION AND RELOCATE AS REQUIRED TO FULLY COMPLETE THE SCOPE OF WORK.
8. GC / ELECTRICAL SUB-CONTRACTOR TO REVIEW WITH OWNER / ARCHITECT ALL SPEAKER AND TELEVISION SPECIFICATIONS AND LOCATIONS FOR SCOPE OF BLOCKING , ELECTRICAL AND TEL/DATA COORDINATION AS REQUIRED.
9. GC / HVAC SUB CONTRACTOR TO REVIEW ALL PROPOSED HVAC SYSTEMS (SEE MECHANICAL ENGINEERING DRAWINGS) ALL DUCT DISTRIBUTION ROUTES TO BE ISOLATED/ WRAPPED TO PREVENT VIBRATION/ NOISE FOR ANIMAL CARE. ALL SUPPLY AND RETURN REGISTERS WILL BE REPLACED / NEW REGISTERS / FILTERS REQUIRED ON ALL SYSTEMS. REVIEW WITH RWP ZOO ANY ADDITIONAL REQUIREMENTS FOR FILTERS AND OR SECURITY OF ALL DUCTS AND REGISTERS FOR ANIMAL CARE.
10. GC TO PROVIDE SAMPLE OF ALL STAINS / PAINTS AND FINISHES FOR REVIEW AND APPROVAL BY ARCHITECT. GC COMPANY WILL PROVIDE 2 COORDINATION MEETINGS WITH ARCHITECT TO REVIEW ALL SCOPE OF WORK AND TO ALLOW ARCHITECT TO REVIEW PRELIMINARY SHOP DRAWINGS BEFORE FINAL SHOP DRAWINGS ARE ISSUED FOR REVIEW BY LDL STUDIO INC.
11. ALL SUBSTRATES SCHEDULED TO RECEIVE NEW FINISHES WILL BE CLEANED, PATCHED AND REPAIRED TO RECEIVE NEW MATERIAL SO AS TO MAINTAIN MANUFACTURERS WARRANTIES ON NEW MATERIAL. RWPZOO HAS STANDING PRIORITY FOR ALL SUBSTRATES TO BE FURNISHED WITH MOLD RESISTANT MATERIAL TO PREVENT REDUCE MOLD IN ANIMAL BUILDINGS.
12. GC TO COORDINATE ALL MATERIAL CLASSIFICATIONS FOR FIRE CODE AND MATERIAL CLEANING GUIDELINES FOR TURNOVER TO OWNER.
13. HVAC / ELECTRICAL / PLUMBER FABRICATOR TO SUBMIT SHOP DRAWINGS FOR REVIEW AND APPROVAL PRIOR TO FABRICATION.
14. GC & MECHANICAL SUB CONTRACTOR TO FIELD VERIFY DIMENSIONS PRIOR TO CONSTRUCTION. GC TO NOTE ALL DISCREPANCIES WITH OWNER AND ARCHITECT PRIOR TO CONSTRUCTION.
15. OPEN
16. PROVIDE 5/8" DENS-SHIELD MOISTURE RESISTANT WALL BOARD SHEATHING AT ALL WET LOCATIONS AND CEMENT BOARD AT ALL TILE LOCATIONS
17. GC TO REVIEW EQUIPMENT CUT SHEET FOR SCOPE OF WORK FOR ALL AUDIO/VISUAL/TELEVISIONS/VIDEO MONITORING FURNISHED BY OWNER TO DETERMINE ALL REQUIREMENTS.
18. OMIT WALL BOARD SHEATHING AND APPLIED WALL FINISH ON THE CHASE SIDE OF ALL WALLS
19. ALL PENETRATIONS THROUGH RATED WALL ASSEMBLIES TO BE TREATED WITH AN APPROVED "FIRESTOP" MATERIAL TO MEET THE SPECIFIED WALL CONSTRUCTION (TYP).
20. G.C. SHALL COORDINATE ALL SLAB AND FLOORS PITCH TO NEW DRAINS.
21. FIGURED DIMENSIONS TAKE PRECEDENCE OVER SCALED DRAWINGS, EXCEPT WHERE NOTED.
22. ALL GYP BOARD WALLS CEILINGS, SOFFITS, HEADERS, ETC. TO BE TAPED, JOINT COMPOUND APPLIED AND THEN SANDED TO A SMOOTH FINISH PRIOR TO APPLYING ANY FINAL FINISH.
23. IT SHALL BE THE GENERAL CONTRACTOR'S RESPONSIBILITY AS COORDINATOR TO CHECK ALL DIMENSIONS AND DETAILS ON SHOP DRAWINGS BEFORE SUBMISSION TO THE ARCHITECT.
24. THE GENERAL CONTRACTOR SHALL PROTECT ALL EXISTING RETAINING WALLS, OVERHEAD WALKWAYS , SITE FENCING DURING ALL CONSTRUCTION PHASES.
25. ALL MECHANICAL GRILLS, ACCESS PANELS, DIFFUSERS, SWITCH/OUTLET PLATES, ETC. ARE TO RECEIVE FINISHES TO MATCH ADJACENT AREAS UNLESS NOTED OTHERWISE.
26. REFER TO INTERIOR ELEVATIONS FOR COORDINATING SHELVING, EQUIPMENT MOUNTING BRACKETS, TELEVISIONS, ACCESSORIES, FIXTURE LOCATIONS, ETC AND PROVIDE FIRE TREATED IN-WALL BLOCKING AS REQUIRED.
27. ALL RECEPTACLES AND SWITCHES PLATES SHALL BE FLUSH MOUNTED FOR ALL AREAS, UNLESS OTHERWISE NOTED. ELECTRICIAN TO SUBMIT SAMPLE OF RECEPTACLE AND SWITCH PLATE COLOR FOR APPROVAL BY ARCHITECT. ELECTRICIAN TO PROVIDE GFCI OUTLETS AT ALL WET LOCATIONS AND KEEPER AREA AS REQUIRED.
28. ALL PLUMBING PIPING SHALL BE COORDINATED WITH OTHER DISCIPLINES, INCLUDING MECHANICAL DUCTWORK, LIGHTING FIXTURES, CONDUITS AND STRUCTURE, PRIOR TO PIPING INSTALLATION.
29. THE GENERAL CONTRACTOR SHALL LAY OUT ALL WORK AND BE RESPONSIBLE TO VERIFY ALL DIMENSIONS & DETAILS PRIOR TO STARTING CONSTRUCTION.
30. THE GENERAL CONTRACTOR SHALL REVIEW AND COORDINATE WITH ALL RELEVANT STRUCTURAL, MECHANICAL, ELECTRICAL, PLUMBING, & FIRE PROTECTION SCOPE PRIOR TO THE START OF CONSTRUCTION.
31. THE CONTRACTOR SHALL COORDINATE AND VERIFY WITH THE OWNER ALL PROPOSED INDOOR EXHIBIT CLIMBING AND ANIMAL SUPPORT EQUIPMENT TO BE INSTALLED BY OWNER - GC TO COORDINATE ADDITIONAL AND NECESSARY BLOCKING / FRAMING TO SUPPORT INSTALLATION OF ALL ANIMAL CARE EQUIPMENT AND CLIMBING APPARATUS
32. THE CONTRACTOR / MILLWORK COMPANY SHALL COORDINATE AND VERIFY WITH OWNER ALL LOCATIONS OF TEL/DATA PORTS OR CABLING FOR EQUIPMENT. GC TO COORDINATE WITH RWP ZOO ALL NECESSARY SECURITY AND ACCESS CODE DEVICES TO BE INSTALLED
33. ALL CONCEALED IN-WALL BLOCKING SHALL BE FIRE TREATED.
34. THE GENERAL CONTRACTOR SHALL REVIEW ALL WORK INDICATED AS "EXISTING TO REMAIN" WITHIN PROJECT TO CONFIRM, THAT IT IS IN GOOD WORKING ORDER AND ACCEPTABLE. IF ITEMS DO NOT WORK OR ARE NOT CODE COMPLIANT TO CURRENT STATE BUILDING CODE, IT SHALL BE THE RESPONSIBILITY OF THE CONTRACTOR TO CALL OWNERS ATTENTION TO ITEM OR FAILURE
35. GC TO REVIEW NEW FIRE ALARM / SECURITY SYSTEM TO COORDINATE TIE-IN TO EXISTING ZOO SYSTEM AS REQUIRED BY OWNER. IF NEW SPRINKLER SYSTEM WILL BE REQUIRED BY AHJ FOR BUILDING, ALL ALARM SYSTEMS TO BE TIED INTO NEW SPRINKLER SYSTEM AS REQUIRED BY RI FIRE CODE, FIRE DEPT.
36. GC WILL PROVIDE STRUCTURAL COLUMN AND BEAM/ FRAMING INFORMATION FROM SUPPLIER TO PROJECT STRUCTURAL ENGINEER FOR REVIEW AND APPROVAL.
37. GC TO REVIEW ALL PROJECT ENGINEERING DRAWINGS ISSUED AS PART OF INSTRUMENTS OF SERVICE. GC TO IDENTIFY ANY CONFLICTS OR COORDINATION ISSUES WITHIN DRAWINGS PRIOR TO COMMENCEMENT OF WORK.
38. ALL INTERIOR WALL PARTITIONS WILL BE TYPE "A" UNLESS INDICATED BY TAG. SEE PARTITION SCHEDULE.
39. PLUMBING SUB CONTRACTOR TO VERIFY WATER AND SEWER REQUIREMENTS. GC TO COORDINATE AVAILABLE SERVICE WITH ALL TRADES, INCLUDING NELSON WATER FITLER EQUIPMENT. WHEN POSSIBLE PLUMBING SUBCONTRACTOR TO REUSE ALL UNDERSLAB UTILITY RUNS AND ROUTES - GC AND PLUMBING SUBCONTRACTOR TO LIMIT TO AS NEEDED ALL SLAB CUTS FOR PLUMBING SEWER LINES.
40. PROVIDE WATER SAVING DEVICES, AS REQUIRED BY CODE, TO ALL PLUMBING FIXTURES/ SCHEDULED AS NEW / ALL EXISITNG DEVISES INDICATED FOR RE-USE WILL BE CLEANED AND PATCH/REPAIR FOR RE-USE AS REQUIRED
41. ALL WORK SHALL BE INSTALLED IN ACCORDANCE WITH THE REQUIREMENTS OF THE LATEST STATE, FEDERAL, COUNTY AND LOCAL CODES INCLUDING ALL SUPPLEMENTS AND/OR ADDITIONS.
42. GC TO CONFIRM ALL FLOORING MATERIAL ADHESIVES WILL SUCCEED IN MOIST CONDITIONS. GC TO CONFIRM WITH REPRESENTATIVES RECOMMENDED PRODUCT FOR SITE APPLICATION.
43. ALL FF&E ITEMS PROVIDED BY GC SHALL BE ORDERED IN A TIMELY MANNER SO AS NOT TO AFFECT CONSTRUCTION SCHEDULE.
44. GC TO COORDINATE ALL MATERIAL CLASSIFICATIONS FOR FIRE CODE & MATERIAL CLEANING GUIDELINES FOR TURNOVER TO OWNER.
45. GC TO REVIEW AND EXAMINE ALL NEW ROOF PENETRATIONS TO CONFIRM WATER TIGHT SEAL AND INSTALL NEEDED FLASHING AS REQUIRED TO PREVENT LEAKS - NEW ROOF TO BE INSTALLED AS REQUIRED FOR A 25 YEAR WARRANTY. GC / ROOFING CONTRACTOR / OWNER/ ARCHITECT TO DETERMINE BEST POSSIBLE SYSTEM TO BE INSTALLED AND MAX. FLASHING REQUIREMENTS FOR A 25 YEAR WARRANTY TO ROOF.

© 2022 LDL STUDIO INC.

ARCHITECT OF RECORD:
LDL STUDIO
ARCHITECT / HOSPITALITY DESIGNER
LDL STUDIO, INC.
106 Putnam Street
Providence, RI 02909
P: 401.274.4516
F. 401.421.2631
www.ldlstudio.com
Architect of Record: Gary M. Lepore, AIA

CERTIFICATION:

CONSULTANTS:

M/E/P & FP ENGINEER:
HP ENGINEERING CONSULTING ENGINEERS, P.C.
15 MAIDEN LANE
NORTH HAVEN, CT
P: 203-239-9425
JOHN PHILLIPS, P.E.

STRUCTURAL ENGINEER:
AMP ENGINEERING INC.
82 SCENIC DRIVE
WEST WARWICK , RI 02893
P: 401.559.3659
ANTHONY ROTONDO, P.E.

OWNER:
ROGER WILLIAMS PARK ZOO
RHODE ISLAND ZOOLOGICAL ASSOC.
FOR THE ROGER WILLIAMS PARK ZOO
1000 ELMWOOD AVENUE
PROVIDENCE
RHODE ISLAND 02907

NUMBER	DATE	DESCRIPTION

REVISIONS:

PROJECT NAME:
RED PANDA EXHIBIT
RWPZ
1000 ELMWOOD AVENUE
PROVIDENCE
RHODE ISLAND 02907

SUBMISSION TYPE:
PERMIT SET

PROJECT TYPE:
NEW CONSTRUCTION

CLIENT NUMBER:
RWPZ 2022_01

ISSUE DATE: NOVEMBER 14, 2022

SHEET NAME:
PROPOSED LOWER ROOF PLAN

DRAWING SCALE:

PROJECT NUMBER:
2022-03

DATE ISSUED:
11/14/2022

A1.03

IF THIS SHEET IS NOT 24 X 36 IT IS A REDUCED SCALE PRINT - SCALE ACCORDINGLY
WWW.LDLSTUDIO.COM LDL STUDIO INC. - CELEBRATING 27 YEARS OF AWARD WINNING SERVICE 1995 - 2022 ARCHITECTS AIA 2030 CHALLENGE ADOPTER

ARCHITECTS AIA 2030 CHALLENGE ADOPTER
LDL STUDIO INC. - CELEBRATING 27 YEARS OF AWARD WINNING SERVICE 1995 - 2022
WWW. LDLSTUDIO.COM
IF THIS SHEET IS NOT 24 X 36 IT IS A REDUCED SCALE PRINT - SCALE ACCORDINGLY

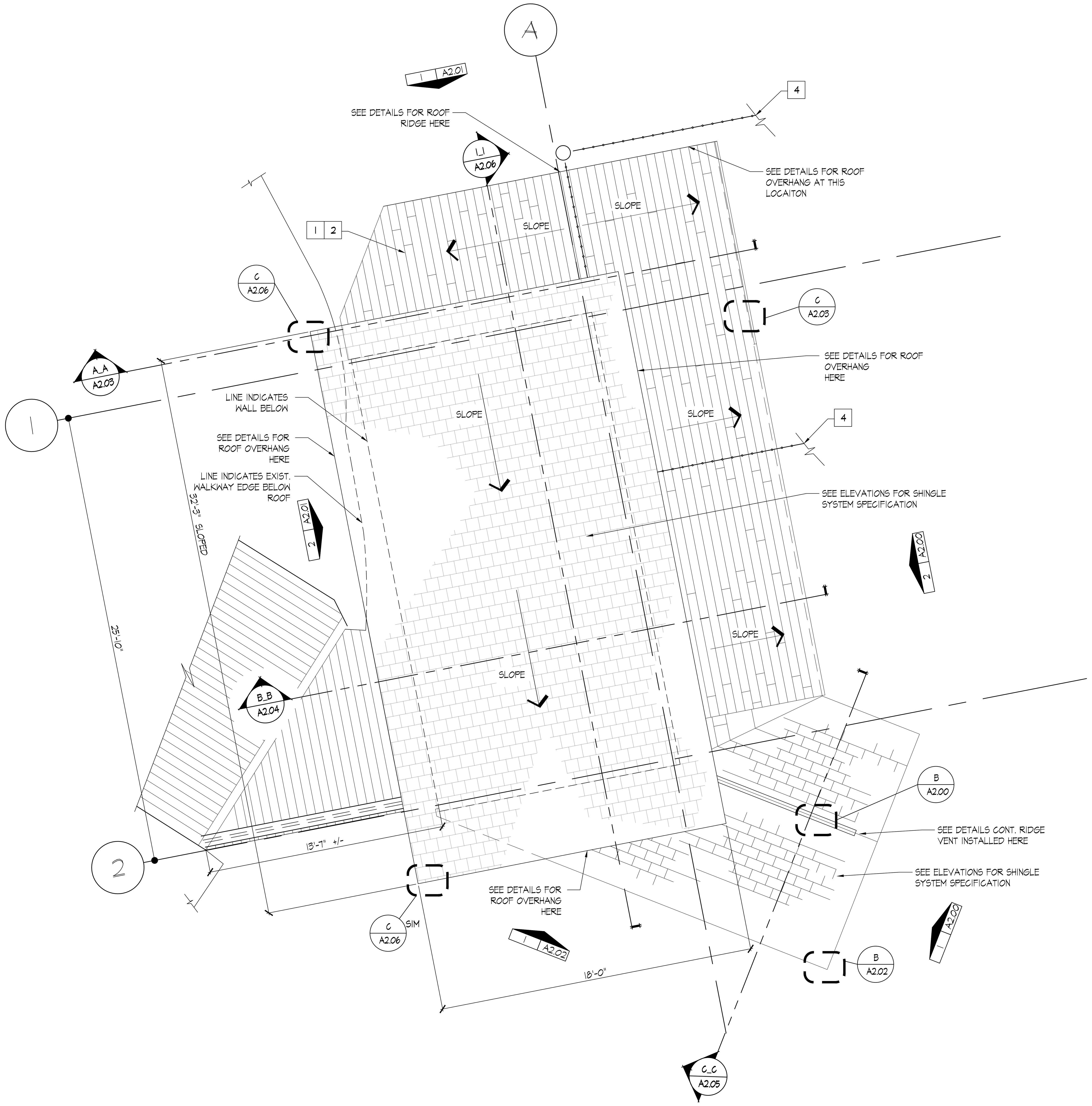

1 / A1.04 PROPOSED UPPER LEVEL ROOF PLAN
SCALE: 1/4"= 1'-0"

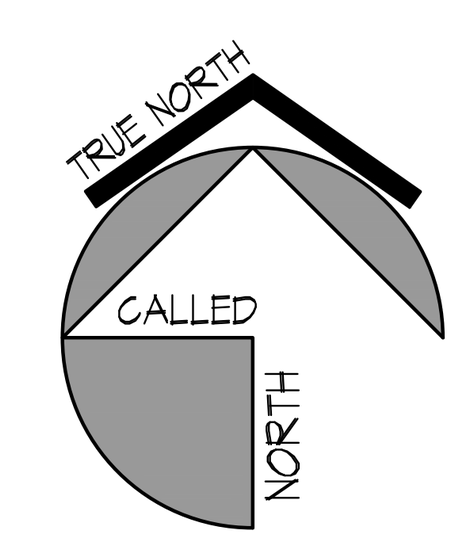

WORKING NOTES:

1. G.C. TO REVIEW ALL M/E/P REQUIREMENTS THAT MAY NEED ROOF PENETRATIONS - GC TO COORDINATE PENETRATION WITH ROOF DETAIL TO CONFIRM NO LEAKS / AND SECURE/ WATERPROOF MEMBRANE - PROVIDE ADDITIONAL PREFABRICATED FLASHING CAPS IF REQUIRED TO MAINTAIN 25 YEAR WARRANTY AT ROOF
2. SEE CONSTRUCTION DETAILS FOR FABRICATION OF ROOF AT THIS LOCATION
3. OPEN
4. GC TO COORDINATE WITH EXTERIOR ENCLOSURE CONSULTANT FOR SCOPE REQUIRED TO EXTEND ENCLOSURE ONTO ROOF / BUILDING - GC TO PROVIDE BLOCKING AS REQUIRED. ENCLOSURE WILL NOT IMPACT ROOF WARRANTY - SECURE TO WALL IF NECESSARY

GENERAL NOTES:

1. THESE DRAWINGS HAVE BEEN COMPILED FROM THE BEST AVAILABLE INFORMATION AND ARE NOT INTENDED TO LIMIT THE SCOPE OF THE WORK. THE CONTRACTOR MAY ENCOUNTER HIDDEN OR COVERED CONDITIONS, NOT INDICATED IN THESE DOCUMENTS, REQUIRING THE CONTRACTOR TO PROVIDE ADDITIONAL WORK FOR THE COMPLETION OF HIS OR HER CONTRACT. IT WILL BE ASSUMED THAT THE CONTRACTOR HAS INSPECTED THE SITE PRIOR TO BIDDING AND VERIFIED THE INFORMATION SUPPLIED HEREIN.
2. GC IS TO VERIFY ALL EXISTING CONDITIONS PRIOR TO ANY WORK, ANY DISCREPANCIES ARE TO BE REPORTED TO THE ARCHITECT AND OWNER PRIOR TO CONSTRUCTION.
3. GC TO COORDINATE ALL FLOOR PENETRATIONS WITH ARCHITECTURAL PLANS FOR LOCATION OF SINKS, FLOOR DRAINS, DRAIN LOCATIONS TO BE FINALIZED BY COORDINATION WITH FIXTURE REQUIREMENTS AND LOCATION OF SERVICES.
4. ALL WOOD IN CONTACT WITH CONCRETE SHALL BE PRESSURE TREATED.
5. ALL DIMENSIONS ARE TAKEN TO FACE OF FINISH UNLESS OTHERWISE NOTED.
6. FIGURED DIMENSIONS TAKE PRECEDENCE OVER SCALED DRAWINGS, EXCEPT WHERE NOTED.
7. THE ELECTRICAL CONTRACTOR SHALL COORDINATE WITH THE GENERAL CONTRACTOR, AND OWNER ALL PROPOSED LOCATIONS FOR RECEPTACLES, CABLE & TELEPHONE AND VIDEO MONITORING DEVICES PRIOR TO THE START OF CONSTRUCTION AND RELOCATE AS REQUIRED TO FULLY COMPLETE THE SCOPE OF WORK.
8. GC / ELECTRICAL SUB-CONTRACTOR TO REVIEW WITH OWNER / ARCHITECT ALL SPEAKER AND TELEVISION SPECIFICATIONS AND LOCATIONS FOR SCOPE OF BLOCKING , ELECTRICAL AND TEL/DATA COORDINATION AS REQUIRED.
9. GC / HVAC SUB CONTRACTOR TO REVIEW ALL PROPOSED HVAC SYSTEMS (SEE MECHANICAL ENGINEERING DRAWINGS) ALL DUCT DISTRIBUTION ROUTES TO BE ISOLATED/ WRAPPED TO PREVENT VIBRATION/ NOISE FOR ANIMAL CARE. ALL SUPPLY AND RETURN REGISTERS WILL BE REPLACED / NEW REGISTERS / FILTERS REQUIRED ON ALL SYSTEMS. REVIEW WITH RWP ZOO ANY ADDITIONAL REQUIREMENTS FOR FILTERS AND OR SECURITY OF ALL DUCTS AND REGISTERS FOR ANIMAL CARE.
10. GC TO PROVIDE SAMPLE OF ALL STAINS / PAINTS AND FINISHES FOR REVIEW AND APPROVAL BY ARCHITECT. GC COMPANY WILL PROVIDE 2 COORDINATION MEETINGS WITH ARCHITECT TO REVIEW ALL SCOPE OF WORK AND TO ALLOW ARCHITECT TO REVIEW PRELIMINARY SHOP DRAWINGS BEFORE FINAL SHOP DRAWINGS ARE ISSUED FOR REVIEW BY LDL STUDIO INC.
11. ALL SUBSTRATES SCHEDULED TO RECEIVE NEW FINISHES WILL BE CLEANED, PATCHED AND REPAIRED TO RECEIVE NEW MATERIAL SO AS TO MAINTAIN MANUFACTURERS WARRANTIES ON NEW MATERIAL. RWPZOO HAS STANDING PRIORITY FOR ALL SUBSTRATES TO BE FURNISHED WITH MOLD RESISTANT MATERIAL TO PREVENT REDUCE MOLD IN ANIMAL BUILDINGS.
12. GC TO COORDINATE ALL MATERIAL CLASSIFICATIONS FOR FIRE CODE AND MATERIAL CLEANING GUIDELINES FOR TURNOVER TO OWNER.
13. HVAC / ELECTRICAL / PLUMBER FABRICATOR TO SUBMIT SHOP DRAWINGS FOR REVIEW AND APPROVAL PRIOR TO FABRICATION.
14. GC & MECHANICAL SUB CONTRACTOR TO FIELD VERIFY DIMENSIONS PRIOR TO CONSTRUCTION. GC TO NOTE ALL DISCREPANCIES WITH OWNER AND ARCHITECT PRIOR TO CONSTRUCTION.
15. OPEN
16. PROVIDE 5/8" DENS-SHIELD MOISTURE RESISTANT WALL BOARD SHEATHING AT ALL WET LOCATIONS AND CEMENT BOARD AT ALL TILE LOCATIONS
17. GC TO REVIEW EQUIPMENT CUT SHEET FOR SCOPE OF WORK FOR ALL AUDIO/VISUAL/TELEVISIONS/VIDEO MONITORING FURNISHED BY OWNER TO DETERMINE ALL REQUIREMENTS.
18. OMIT WALL BOARD SHEATHING AND APPLIED WALL FINISH ON THE CHASE SIDE OF ALL WALLS
19. ALL PENETRATIONS THROUGH RATED WALL ASSEMBLIES TO BE TREATED WITH AN APPROVED "FIRESTOP" MATERIAL TO MEET THE SPECIFIED WALL CONSTRUCTION (TYP).
20. G.C. SHALL COORDINATE ALL SLAB AND FLOORS PITCH TO NEW DRAINS.
21. FIGURED DIMENSIONS TAKE PRECEDENCE OVER SCALED DRAWINGS, EXCEPT WHERE NOTED.
22. ALL GYP BOARD WALLS CEILINGS, SOFFITS, HEADERS, ETC. TO BE TAPED, JOINT COMPOUND APPLIED AND THEN SANDED TO A SMOOTH FINISH PRIOR TO APPLYING ANY FINAL FINISH.
23. IT SHALL BE THE GENERAL CONTRACTOR'S RESPONSIBILITY AS COORDINATOR TO CHECK ALL DIMENSIONS AND DETAILS ON SHOP DRAWINGS BEFORE SUBMISSION TO THE ARCHITECT.
24. THE GENERAL CONTRACTOR SHALL PROTECT ALL EXISTING RETAINING WALLS, OVERHEAD WALKWAYS , SITE FENCING DURING ALL CONSTRUCTION PHASES.
25. ALL MECHANICAL GRILLS, ACCESS PANELS, DIFFUSERS, SWITCH/OUTLET PLATES, ETC. ARE TO RECEIVE FINISHES TO MATCH ADJACENT AREAS UNLESS NOTED OTHERWISE.
26. REFER TO INTERIOR ELEVATIONS FOR COORDINATING SHELVING, EQUIPMENT MOUNTING BRACKETS, TELEVISIONS, ACCESSORIES, FIXTURE LOCATIONS, ETC AND PROVIDE FIRE TREATED IN-WALL BLOCKING AS REQUIRED.
27. ALL RECEPTACLES AND SWITCHES PLATES SHALL BE FLUSH MOUNTED FOR ALL AREAS, UNLESS OTHERWISE NOTED. ELECTRICIAN TO SUBMIT SAMPLE OF RECEPTACLE AND SWITCH PLATE COLOR FOR APPROVAL BY ARCHITECT. ELECTRICIAN TO PROVIDE GFCI OUTLETS AT ALL WET LOCATIONS AND KEEPER AREA AS REQUIRED.
28. ALL PLUMBING PIPING SHALL BE COORDINATED WITH OTHER DISCIPLINES, INCLUDING MECHANICAL DUCTWORK, LIGHTING FIXTURES, CONDUITS AND STRUCTURE, PRIOR TO PIPING INSTALLATION.
29. THE GENERAL CONTRACTOR SHALL LAY OUT ALL WORK AND BE RESPONSIBLE TO VERIFY ALL DIMENSIONS & DETAILS PRIOR TO STARTING CONSTRUCTION.
30. THE GENERAL CONTRACTOR SHALL REVIEW AND COORDINATE WITH ALL RELEVANT STRUCTURAL, MECHANICAL, ELECTRICAL, PLUMBING, & FIRE PROTECTION SCOPE PRIOR TO THE START OF CONSTRUCTION.
31. THE CONTRACTOR SHALL COORDINATE AND VERIFY WITH THE OWNER ALL PROPOSED INDOOR EXHIBIT CLIMBING AND ANIMAL SUPPORT EQUIPMENT TO BE INSTALLED BY OWNER - GC TO COORDINATE ADDITIONAL AND NECESSARY BLOCKING / FRAMING TO SUPPORT INSTALLATION OF ALL ANIMAL CARE EQUIPMENT AND CLIMBING APPARATUS
32. THE CONTRACTOR / MILLWORK COMPANY SHALL COORDINATE AND VERIFY WITH OWNER ALL LOCATIONS OF TEL/DATA PORTS OR CABLING FOR EQUIPMENT. GC TO COORDINATE WITH RWP ZOO ALL NECESSARY SECURITY AND ACCESS CODE DEVICES TO BE INSTALLED
33. ALL CONCEALED IN-WALL BLOCKING SHALL BE FIRE TREATED.
34. THE GENERAL CONTRACTOR SHALL REVIEW ALL WORK INDICATED AS "EXISTING TO REMAIN" WITHIN PROJECT TO CONFIRM, THAT IT IS IN GOOD WORKING ORDER AND ACCEPTABLE. IF ITEMS DO NOT WORK OR ARE NOT CODE COMPLIANT TO CURRENT STATE BUILDING CODE, IT SHALL BE THE RESPONSIBILITY OF THE CONTRACTOR TO CALL OWNERS ATTENTION TO ITEM OR FAILURE.
35. GC TO REVIEW NEW FIRE ALARM / SECURITY SYSTEM TO COORDINATE TIE-IN TO EXISTING ZOO SYSTEM AS REQUIRED BY OWNER. IF NEW SPRINKLER SYSTEM WILL BE REQUIRED BY AHJ FOR BUILDING. ALL ALARM SYSTEMS TO BE TIED INTO NEW SPRINKLER SYSTEM AS REQUIRED BY RI FIRE CODE. FIRE DEPT.
36. GC WILL PROVIDE STRUCTURAL COLUMN AND BEAM/ FRAMING INFORMATION FROM SUPPLIER TO PROJECT STRUCTURAL ENGINEER FOR REVIEW AND APPROVAL.
37. GC TO REVIEW ALL PROJECT ENGINEERING DRAWINGS ISSUED AS PART OF INSTRUMENTS OF SERVICE. GC TO IDENTIFY ANY CONFLICTS OR COORDINATION ISSUES WITHIN DRAWINGS PRIOR TO COMMENCEMENT OF WORK.
38. ALL INTERIOR WALL PARTITIONS WILL BE TYPE "A" UNLESS INDICATED BY TAG. SEE PARTITION SCHEDULE.
39. PLUMBING SUB CONTRACTOR TO VERIFY WATER AND SEWER REQUIREMENTS. GC TO COORDINATE AVAILABLE SERVICE WITH ALL TRADES, INCLUDING NELSON WATER FITLER EQUIPMENT. WHEN POSSIBLE PLUMBING SUBCONTRACTOR TO REUSE ALL UNDERSLAB UTILITY RUNS AND ROUTES - GC AND PLUMBING SUBCONTRACTOR TO LIMIT TO AS NEEDED ALL SLAB CUTS FOR PLUMBING SEWER LINES.
40. PROVIDE WATER SAVING DEVICES, AS REQUIRED BY CODE, TO ALL PLUMBING FIXTURES/ SCHEDULED AS NEW / ALL EXISITNG DEVISES INDICATED FOR RE-USE WILL BE CLEANED AND PATCH/REPAIR FOR RE-USE AS REQUIRED
41. ALL WORK SHALL BE INSTALLED IN ACCORDANCE WITH THE REQUIREMENTS OF THE LATEST STATE, FEDERAL, COUNTY AND LOCAL CODES INCLUDING ALL SUPPLEMENTS AND/OR ADDITIONS.
42. GC TO CONFIRM ALL FLOORING MATERIAL ADHESIVES WILL SUCCEED IN MOIST CONDITIONS. GC TO CONFIRM WITH REPRESENTATIVES RECOMMENDED PRODUCT FOR SITE APPLICATION.
43. ALL FF&E ITEMS PROVIDED BY GC SHALL BE ORDERED IN A TIMELY MANNER SO AS NOT TO AFFECT CONSTRUCTION SCHEDULE.
44. GC TO COORDINATE ALL MATERIAL CLASSIFICATIONS FOR FIRE CODE & MATERIAL CLEANING GUIDELINES FOR TURNOVER TO OWNER.
40. GC TO REVIEW AND EXAMINE ALL NEW ROOF PENETRATIONS TO CONFIRM WATER TIGHT SEAL AND INSTALL NEEDED FLASHING AS REQUIRED TO PREVENT LEAKS - NEW ROOF TO BE INSTALLED AS REQUIRED FOR A 25 YEAR WARRANTY. GC / ROOFING CONTRACTOR / OWNER/ ARCHITECT TO DETERMINE BEST POSSIBLE SYSTEM TO BE INSTALLED AND MAX. FLASHING REQUIREMENTS FOR A 25 YEAR WARRANTY TO ROOF.

© 2022 LDL STUDIO INC.

ARCHITECT OF RECORD:
LDL STUDIO
ARCHITECT / HOSPITALITY DESIGNER
LDL STUDIO, INC.
106 Putnam Street
Providence, RI 02909
P: 401.274.4516
F. 401.421.2631
www.ldlstudio.com
Architect of Record: Gary M. Lepore, AIA

CERTIFICATION:

CONSULTANTS:

M/E/P & FP ENGINEER:
HP ENGINEERING CONSULTING ENGINEERS, P.C.
15 MAIDEN LANE
NORTH HAVEN, CT
P: 203-239-9425
JOHN PHILLIPS, P.E.

STRUCTURAL ENGINEER:
AMR ENGINEERING INC.
82 SCENIC DRIVE
WEST WARWICK , RI 02893
P: 401.559.3659
ANTHONY ROTONDO, P.E.

OWNER:
ROGER WILLIAMS PARK ZOO
RHODE ISLAND ZOOLOGICAL ASSOC. FOR THE ROGER WILLIAMS PARK ZOO
1000 ELMWOOD AVENUE
PROVIDENCE
RHODE ISLAND 02907

NUMBER	DATE	DESCRIPTION

REVISIONS:

PROJECT NAME:
RED PANDA EXHIBIT
RWPZ
1000 ELMWOOD AVENUE
PROVIDENCE
RHODE ISLAND 02907

SUBMISSION TYPE: PERMIT SET

PROJECT TYPE: NEW CONSTRUCTION

CLIENT NUMBER: RWPZ 2022_01

ISSUE DATE: NOVEMBER 14, 2022

SHEET NAME: PROPOSED UPPER ROOF PLAN

DRAWING SCALE:

PROJECT NUMBER: 2022-03

DATE ISSUED: 11/14/2022

A1.04

ARCHITECTS AIA 2030 CHALLENGE ADOPTER
LDL STUDIO INC. - CELEBRATING 27 YEARS OF AWARD WINNING SERVICE 1995 - 2022
WWW.LDLSTUDIO.COM
IF THIS SHEET IS NOT 24 X 36 IT IS A REDUCED SCALE PRINT - SCALE ACCORDINGLY

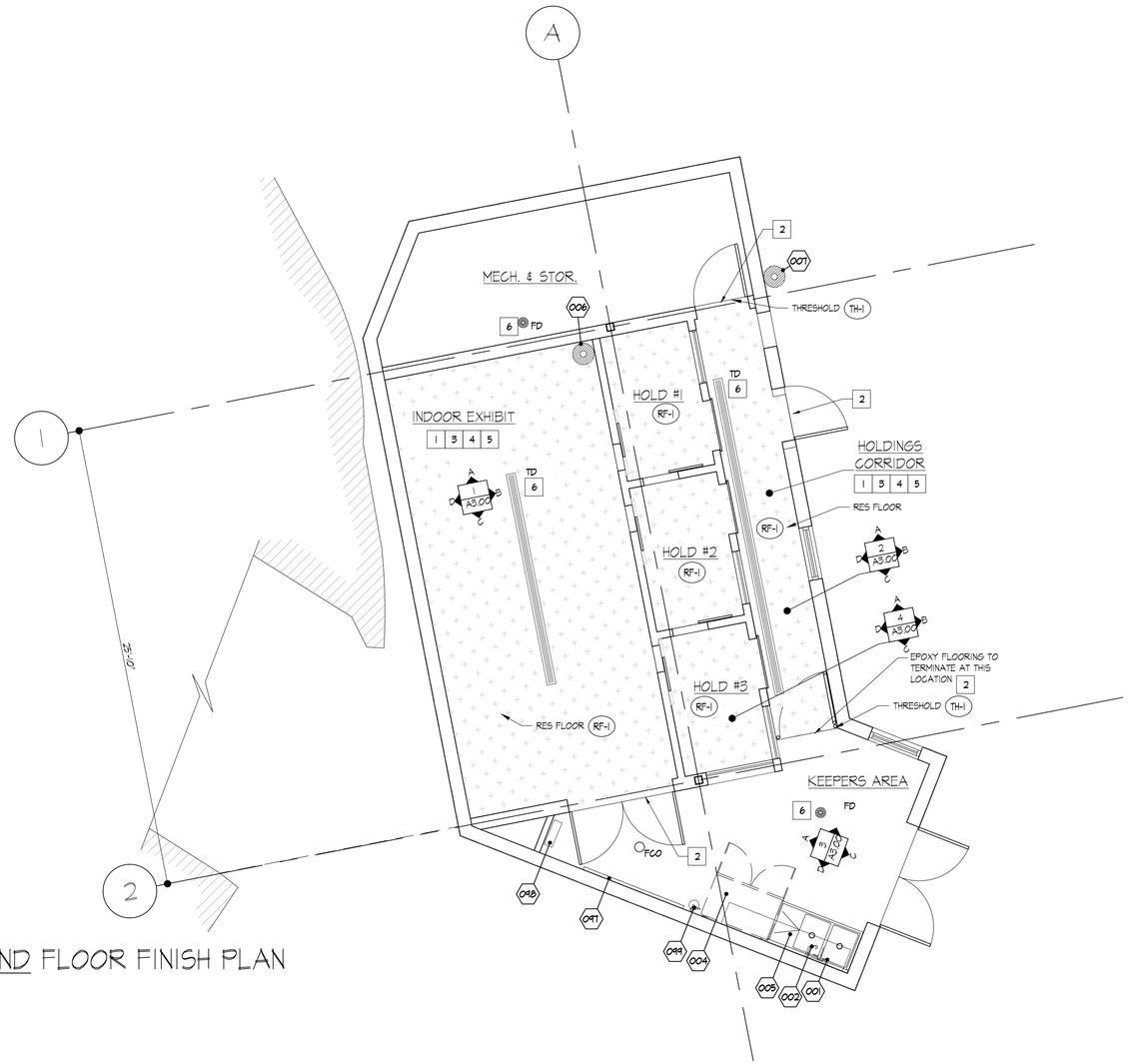

1 / A1.05 PROPOSED GROUND FLOOR FINISH PLAN
SCALE: 1/4"= 1'-0"

GENERAL NOTES:

1. THESE DRAWINGS HAVE BEEN COMPILED FROM THE BEST AVAILABLE INFORMATION AND ARE NOT INTENDED TO LIMIT THE SCOPE OF THE WORK. THE CONTRACTOR MAY ENCOUNTER HIDDEN OR COVERED CONDITIONS, NOT INDICATED IN THESE DOCUMENTS, REQUIRING THE CONTRACTOR TO PROVIDE ADDITIONAL WORK FOR THE COMPLETION OF HIS OR HER CONTRACT. IT WILL BE ASSUMED THAT THE CONTRACTOR HAS INSPECTED THE SITE PRIOR TO BIDDING AND VERIFIED THE INFORMATION SUPPLIED HEREIN.
2. GC IS TO VERIFY ALL EXISTING CONDITIONS PRIOR TO ANY WORK. ANY DISCREPANCIES ARE TO BE REPORTED TO THE ARCHITECT AND OWNER PRIOR TO CONSTRUCTION.
3. GC AND ALL OTHER TRADES TO COORDINATE ALL MEP, TRENCH, DRAIN SLOPES & ANY OTHER SLAB WORK PRIOR TO THE START OF ANY FLOOR INSTALLATION
4. GC WILL REVIEW ALL MANUFACTURER'S SPECIFICATIONS AND INSTALLATION GUIDELINES TO CONFIRM ALL SUBSTRATES AND EXISTING SURFACES INDICATED TO RECEIVE NEW FINISHES HAVE BEEN PREPPED / PATCH AND REPAIRED TO PROPERLY RECEIVE NEW SCHEDULED FINISH. ALL SURFACES MUST COMPLY WITH MANUFACTURERS REQUIREMENT SO FINAL FINNISH WARRANTY WILL BE MAINTAINED.
5. GC / FLOORING INSTALLER TO REVIEW MATERIAL GUIDELINES FOR INSTILLATION OF FLOOR AT TRIM KITS FOR FLOOR SINKS, FLOOR DRAINS AND EQUIPMENT CURBS -
6. ALL MATERIALS / FF&E ITEMS PROVIDED BY GC SHALL BE ORDERED IN A TIMELY MANNER SO AS NOT TO AFFECT CONSTRUCTION SCHEDULE.
7. GC TO COORDINATE ALL MATERIAL CLASSIFICATIONS FOR FIRE CODE AND MATERIAL CLEANING GUIDELINES FOR TURNOVER TO OWNER. GC WILL MAINTAIN ALL PAPERWORK FOR MATERIAL ORDERED TO CONFIRM COMPLIANCE TO FIRE & BUILDING CODE DURING CONSTRUCTION - AT THE COMPLETION OF CONSTRUCTION ALL PAPERWORK AND WARRANTY INFORMATION WILL BE TURNED OVER TO OWNER AS PART OF PROJECT CLOSE-OUT
8. GC TO COORDINATE TRANSITION STRIPS AT ALL MATERIAL CHANGES. IN ADDITION, COORDINATE MATERIAL LEVEL CHANGES. ALL MATERIAL TRANSITIONS MUST COMPLY WITH ACCESSIBILITY AND BUILDING CODES. ALL FLOOR TRANSITIONS NOT INDICTED BETWEEN MATERIALS WILL HAPPEN AT CENTER LINE OF DOOR THRESHOLD WHEN PART OF SCOPE
9. GC / ARCHITECT/ FLOORING INSTALLER WILL REVIEW ALL MATERIAL EDGES PRIOR TO ORDERING / INSTALLING MATERIAL. FLOOR TRANSITION LOCATION WHEN POSSIBLE WILL BE AT THE INSIDE EDGE OF MILLWORK FRONT FOOTER EDGE AND OR CASEWORK SO MATERIAL IS NOT VISIBLE BEYOND MILLWORK FASCIA.
10. OPEN
11. ALL CONSTRUCTION SHALL CONFORM TO ALL GOVERNING CODES AND ORDINANCES UNDER WHICH THEY ARE PERFORMED. INCLUSIVE OF ALL REGULATIONS AND OSHA GUIDELINES FOR SLIP COEFFICIENT AT USAGE LOCATION
12. ALL FLOORING TRANSITIONS ARE TO BE SEPARATED WITH GROUTED IN SHUTER STRIP. PREPARE FLOOR AS REQUIRED TO ASSURE A SMOOTH FINISH BETWEEN MATERIALS.
13. GC TO CONFIRM ALL FLOORING MATERIAL ADHESIVES WILL SUCCEED IN MOIST CONDITIONS. GC TO CONFIRM WITH REPRESENTATIVES RECOMMENDED PRODUCT FOR SITE APPLICATION.
14. RF-1 FLOOR INSTALLER TO REVIEW WITH MANUFACTURER REQUIRED UNDERLAY AND OR MASTIC FOR TREATMENT OF NEW CONCRETE SLAB TO RECEIVE SPECIFIED FLOOR - IF APPLIED EPOXY MASTIC IS RECOMMENDED, FLOORING INSTALLER TO REVIEW WITH GC COORDINATION OF FLOOR HEIGHT WITH EXISTING CONDITIONS AND DOOR HEIGHTS
15. GC / OWNER / FLOOR INSTALLER AND ARCHITECT TO REVIEW LOCATION OF RF-1 EDGE AT ANIMAL SLIDE DOORS FOR COORDINATION OF INTEGRAL BASE AT INDOOR EXHIBIT AND HOLDING ROOMS
16. INSTALLER TO SUBMIT ALL CUT SHEETS AND MAINTENANCE INSTRUCTIONS FOR ALL FLOORING MATERIALS TO OWNER AS PART OF MANUALS FOR FLOOR CARE AND SERVICE. INSTALLER TO REVIEW WITH OWNER IF ATTIC STOCK SHOULD BE ORDER WITH SUPPLIES TO PATCH / REPAIR IF REQUIRED WITH SAME LOT NUMBER

WORKING NOTES:

1. GC TO REVIEW WITH PLUMBER AND FLOORING INSTALLER SCOPE REQUIRED AT ALL TRIM KITS FOR FLOOR DRAINS TO BE USED.
2. SEE DETAILS FOR TRANSITION OR THRESHOLDS BETWEEN FLOORING SYSTEMS AND OR AT LOCATION OF DOORS / EXTERIOR BUILDING EDGE
3. SEE SLAB PLANS FOR LOCATIONS OF ALL CONSTRUCTION JOINTS AND SLAB EDGES - FINISH FLOOR INSTALLER TO PROVIDE SIMILAR JOINT / SEAMS AT CONSTRUCTION JOINT
4. SEE PLUMBING DRAWINGS FOR SPEC ON FLOOR DRAIN & TRIM KIT - FINISH FLOOR INSTALLER TO PROVIDE FULL COORDINATION AT TRIM KIT TO PREVENT FLOOR FAILURE AT FIXTURE
5. FLOORING INSTALLER IS REQUIRED TO REVIEW INTERIOR ELEVATIONS FOR ALL RESILIENT BASES AND EXTENSION OF NEW FLOOR ONTO WALLS TO CREATE INTEGRAL BASE - SEE DETAIL #5 SHEET A3.00
6. GC AND FLOORING INSTALLER TO REVIEW CONCRETE FLOOR INSTALLATION FOR MAXIMUM SLOPE TO DRAINS TO ALLOW FOR FULL DRAINAGE OF WATER

LEGEND:

DESCRIPTION	SYMBOL
FLOOR DRAIN	FD
TRENCH DRAIN	TD
FLOOR CLEAN OUT	FCO

SCOPE LEGEND

HATCH INDICATES FLOORING SCOPE ZONE. REFER TO FF & E DRAWINGS MATERIAL SCHEDULE.

EQUIPMENT SCHEDULE

ITEM NO	QTY	EQUIPMENT CATEGORY	WEBSTURANTSTORE.COM / MANUFACTURER	MODEL NUMBER	EQUIPMENT REMARKS	EQUIP DIMENSIONS	AMPS	KW	HP	VOLTS	PHASE	CYCLE	DIRECT	PLUG	ELECTRICAL AFF (IN)	ELEC REMARKS
001	1	2 COMP SINK RIGHT DRAINBOARD	REGENCY– THRU WEBSTURANT	600S218241G RT	SEE CUT / SPEC SHEET FOR LAYOUT / DIMENSIONS											
	1	TWIST HANDLE WASTE VALVE	REGENCY– THRU WEBSTURANT	600 DT1												
002	1	LOW PROFILE PRE–RINSE FAUCET	WATERLOO–THRU WEBSTURANT	750PRW–L812												
003	1	OPEN	OPEN	OPEN	OPEN											
004	1	2 DOOR UC REFRIGERATOR	AVANTCO–THRU WEBSTURANT	178SSWT48RHC												
005	2	15" D WALL SHELVING	REGENCY– THRU WEBSTURANT	600W S1560 INCLD BRACKETS	INTERIOR ELEVATIONS											
006	1	NELSON INDOOR WATERER	NELSON– 888–844–6606	730–10CS	INTERIOR EXHIBIT CORNER REFER TO PLUMBING DWGS											
007	1	NELSON OUTDOOR WATERER	NELSON– 888–844–6606	730–10WS – WITH HEATER	EXTERIOR EXHIBIT WALL REFER TO PLUMBING DWGS											
097	2	COMM. CLINCH WALL MNTED HOLDER	GRAINGER	22N326	WALL MOUNTED CLINCH HOLDER FOR BROOMS/ SHOVELS/RACKS											
098	1	25+ COMM FIRST AID KIT	GRAINGER – ANSI STANDARD	ITEM # 488G76 MFR# 90561												
099	1	COMM "ABC" FIRE EXTNGSH	BUCKEYE	47220 ABC	ORDER WITH WALL BRACKET 4727 00247											

ARCHITECT OF RECORD:
LDL STUDIO
ARCHITECT / HOSPITALITY DESIGNER
LDL STUDIO, INC.
106 Putnam Street
Providence, RI 02909
P: 401.274.4516
F. 401.421.2631
www.ldlstudio.com
Architect of Record: Gary M. Lepore, AIA

CERTIFICATION:

CONSULTANTS:

M/E/P & FP ENGINEER:
HP ENGINEERING CONSULTING ENGINEERS, P.C.
15 MAIDEN LANE
NORTH HAVEN, CT
P: 203-239-9425
JOHN PHILLIPS, P.E.

STRUCTURAL ENGINEER:
AMP ENGINEERING INC.
82 SCENIC DRIVE
WEST WARWICK , RI 02893
P: 401.559.3659
ANTHONY ROTONDO, P.E.

OWNER:
RHODE ISLAND ZOOLOGICAL ASSOC.
FOR THE ROGER WILLIAMS PARK ZOO
1000 ELMWOOD AVENUE
PROVIDENCE
RHODE ISLAND 02907

NUMBER	DATE	DESCRIPTION

REVISIONS:

PROJECT NAME:
RED PANDA EXHIBIT
RWPZ
1000 ELMWOOD AVENUE
PROVIDENCE
RHODE ISLAND 02907

SUBMISSION TYPE:
PERMIT SET

PROJECT TYPE:
NEW CONSTRUCTION

CLIENT NUMBER:
RWPZ 2022_01

ISSUE DATE: NOVEMBER 14, 2022

SHEET NAME:
PROPOSED GROUND FLOOR FINISH & EQUIPMENT LEGEND PLAN

DRAWING SCALE:

PROJECT NUMBER:
2022-03

DATE ISSUED:
11/14/2022

A1.05

© 2022 LDL STUDIO INC.

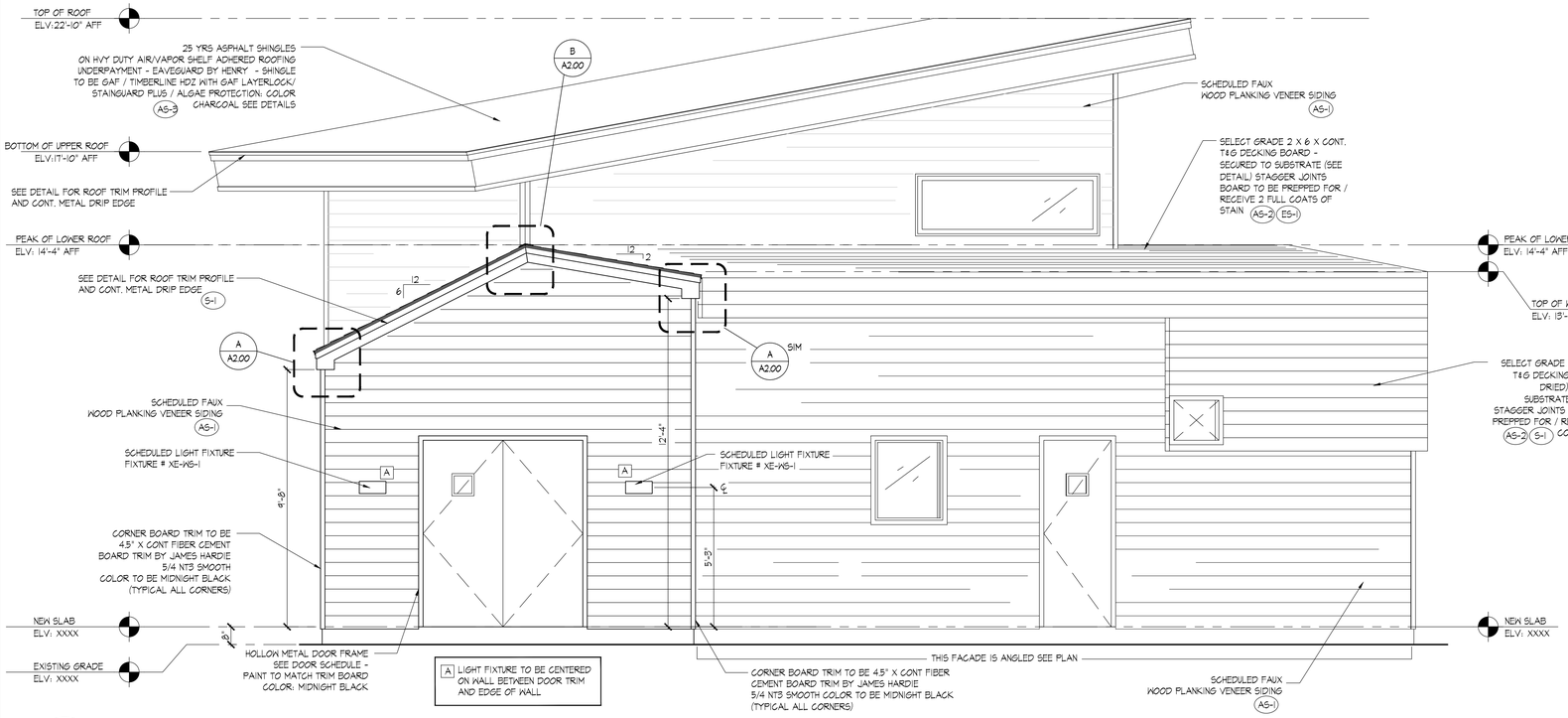

1 / A2.00 EAST ELEVATION
SCALE: 3/8"= 1'-0"

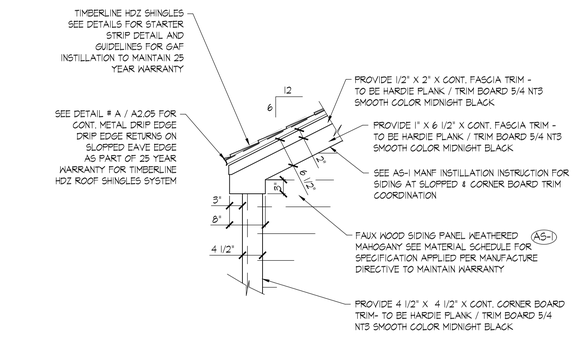

A / A2.00 DETAIL AT ROOF EAVE / SOFFIT RETURN FASCIA
SCALE: 3/4" = 1'-0"

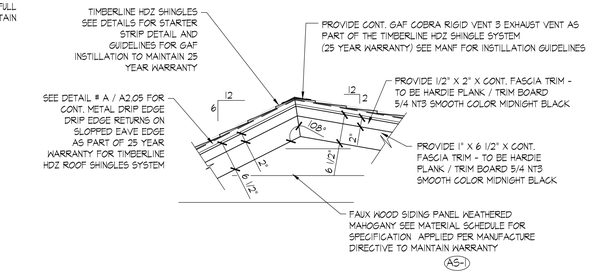

B / A2.00 DETAIL AT ROOF EAVE / ROOF RIDGE
SCALE: 3/4" = 1'-0"

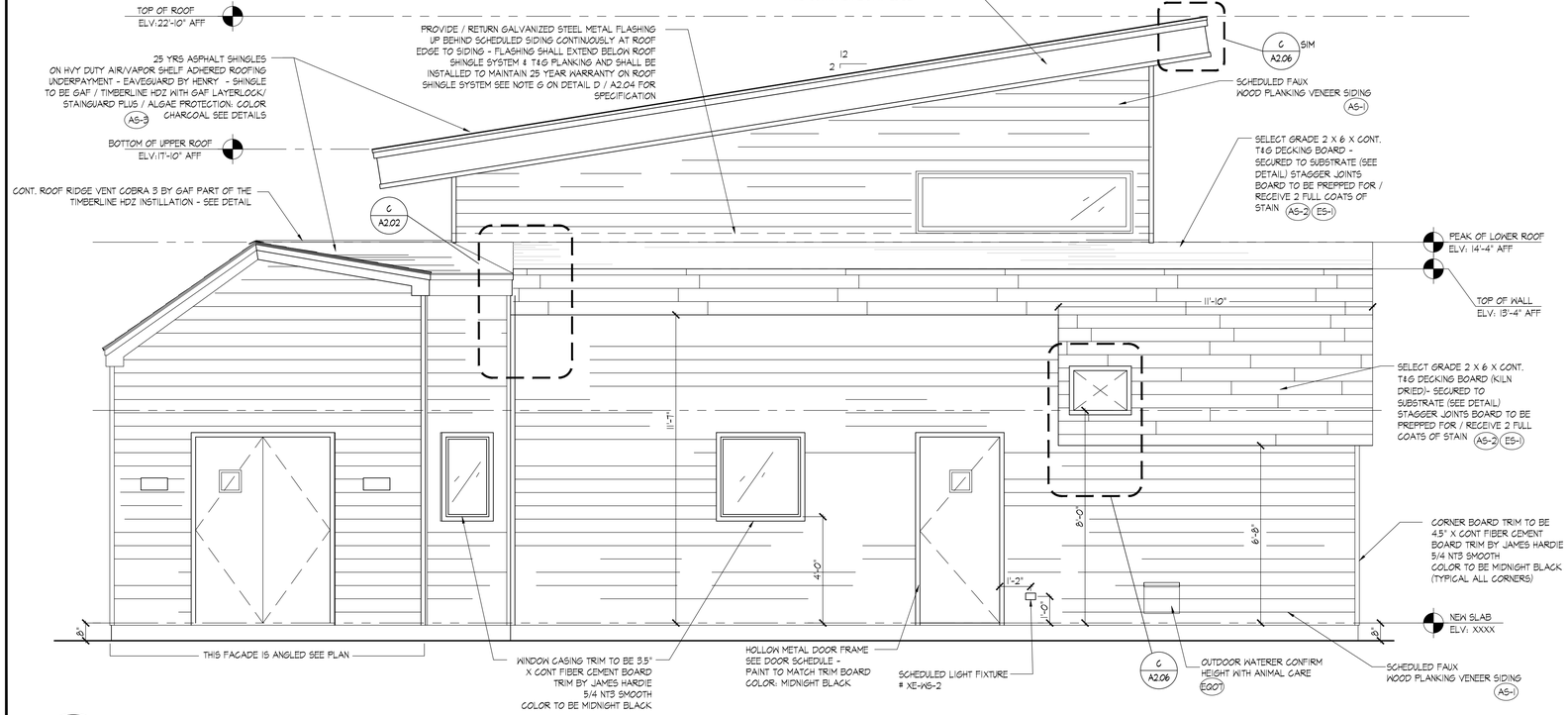

2 / A2.00 NORTH / EAST ELEVATION
SCALE: 3/8"= 1'-0"

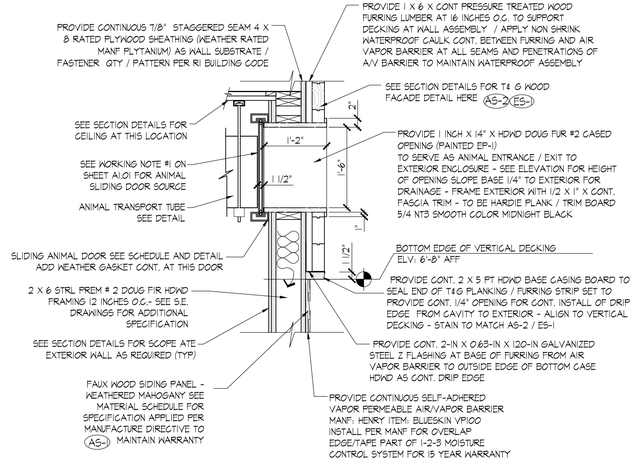

C / A2.00 DETAIL AT ANIMAL ACCESS TO EXTERIOR EXHIBIT
SCALE: 3/4" = 1'-0"

© 2022 LDL STUDIO INC.

ARCHITECTS AIA 2030 CHALLENGE ADOPTER
AWARD WINNING SERVICE 1995 - 2022
27 YEARS OF
LDL STUDIO INC. - CELEBRATING
WWW.LDLSTUDIO.COM
IF THIS SHEET IS NOT 24 X 36 IT IS A REDUCED SCALE PRINT - SCALE ACCORDINGLY

ARCHITECT OF RECORD:
LDL STUDIO
ARCHITECT / HOSPITALITY DESIGNER
LDL STUDIO, INC.
106 Putnam Street
Providence, RI 02909
P: 401.274.4516
F. 401.421.2631
www.ldlstudio.com
Architect of Record: Gary M. Lepore, AIA

CERTIFICATION:

CONSULTANTS:

M/E/P & FP ENGINEER:
HP ENGINEERING CONSULTING
ENGINEERS, P.C.
15 MAIDEN LANE
NORTH HAVEN, CT
P: 203-239-9425
JOHN PHILLIPS, P.E.

STRUCTURAL ENGINEER:
AMP ENGINEERING INC.
82 SCENIC DRIVE
WEST WARWICK , RI 02893
P: 401.559.3659
ANTHONY ROTONDO, P.E.

OWNER:
ROGER WILLIAMS PARK ZOO
RHODE ISLAND ZOOLOGICAL ASSOC.
FOR THE ROGER WILLIAMS PARK ZOO
1000 ELMWOOD AVENUE
PROVIDENCE
RHODE ISLAND 02907

NUMBER	DATE	DESCRIPTION

REVISIONS:

PROJECT NAME:
RED PANDA EXHIBIT
RWPZ
1000 ELMWOOD AVENUE
PROVIDENCE
RHODE ISLAND 02907

SUBMISSION TYPE:
PERMIT SET

PROJECT TYPE:
NEW CONSTRUCTION

CLIENT NUMBER:
RWPZ 2022_01

ISSUE DATE: NOVEMBER 14, 2022

SHEET NAME:
PROPOSED BUILDING
ELEVATIONS

DRAWING SCALE:

PROJECT NUMBER:
2022-03

DATE ISSUED
11/14/2022

A2.00

ARCHITECTS AIA 2030 CHALLENGE ADOPTER
SCALE 0 1 3"=1'
SCALE 0 1/2" 1 1 1/2"=1'
SCALE 0 1 2 3/4"=1'
SCALE 0 1 2 1"=1'
SCALE 0 2 4 3/4"=1'
SCALE 0 2 4 1/2"=1'
SCALE 0 4 8 1/4"=1'
SCALE 0 5 10 1/8"=1'
SCALE 0 10 20 1/16"=1'
SCALE 0 20 40 1/32"=1'
IF THIS SHEET IS NOT 24 X 36 IT IS A REDUCED SCALE PRINT - SCALE ACCORDINGLY
LDL STUDIO INC. - CELEBRATING 27 YEARS OF AWARD WINNING SERVICE 1995 - 2022
WWW.LDLSTUDIO.COM

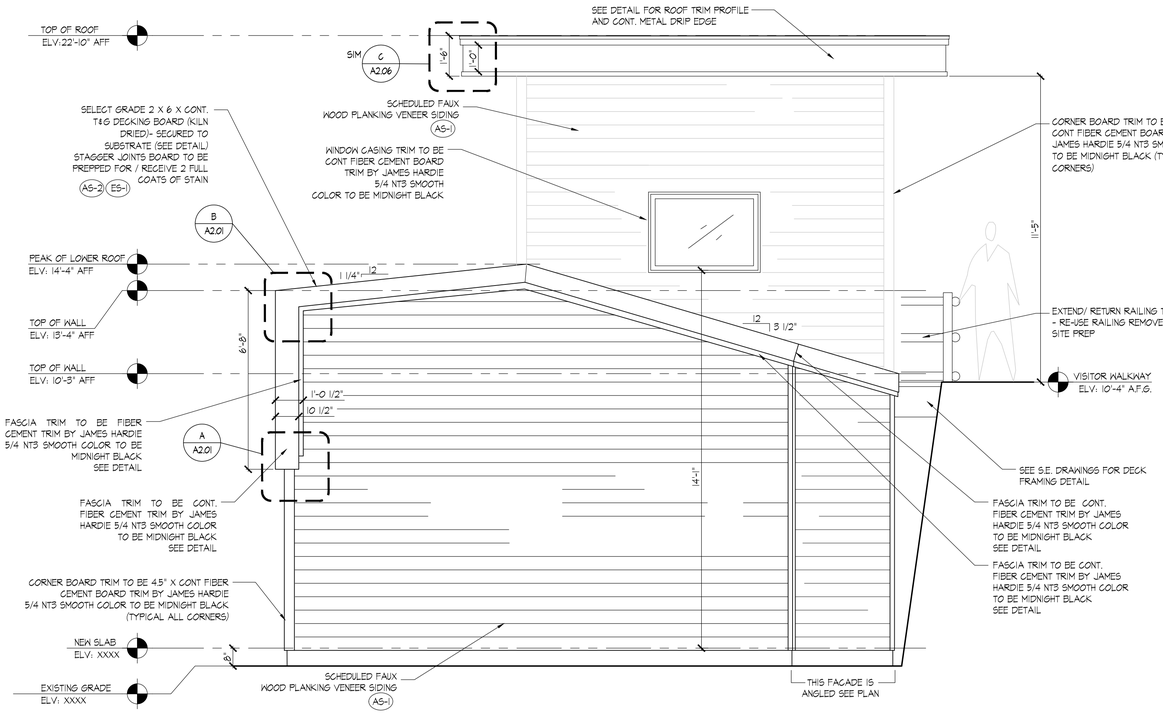

1 / A2.01 NORTH ELEVATION
SCALE: 3/8"= 1'-0"

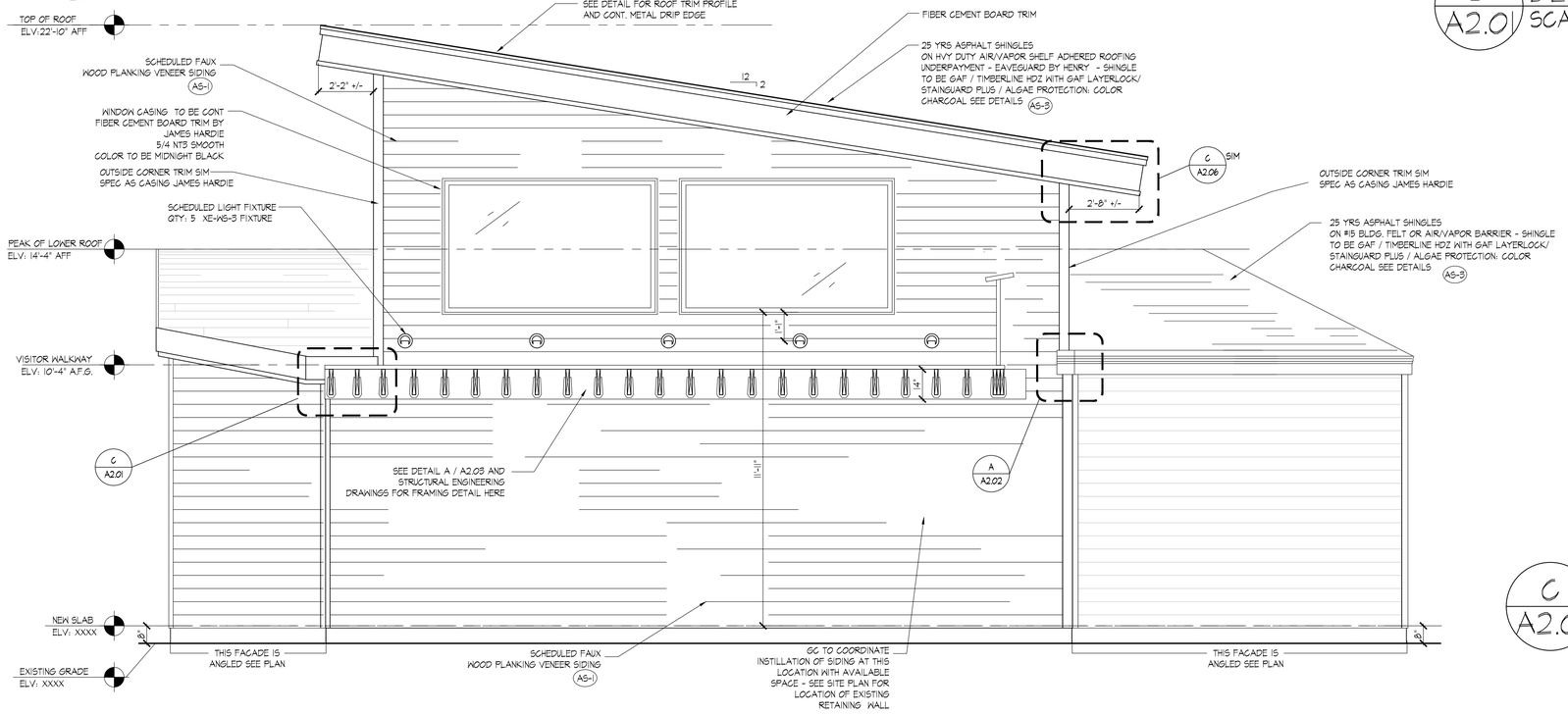

2 / A2.01 VISITORS MAIN ELEVATION (NORTH / WEST)
SCALE: 3/8"= 1'-0"

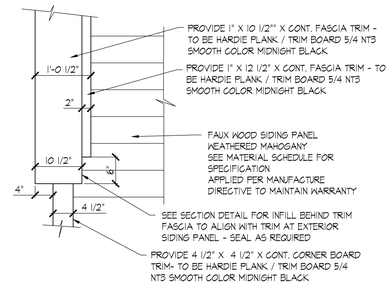

A / A2.01 DETAIL AT BOTTOM EDGE OF T&G FASCIA RETURN
SCALE: 3/4" = 1'-0"

SEE DETAIL C ON SHEET A2.03 FOR SECTION AT THIS LOCAITON

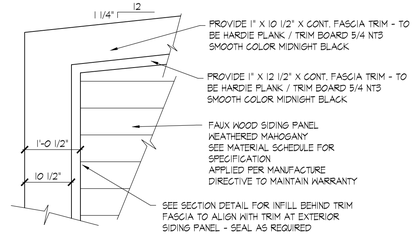

B / A2.01 DETAIL AT T&G FASCIA RETURN ON FACADE
SCALE: 3/4" = 1'-0"

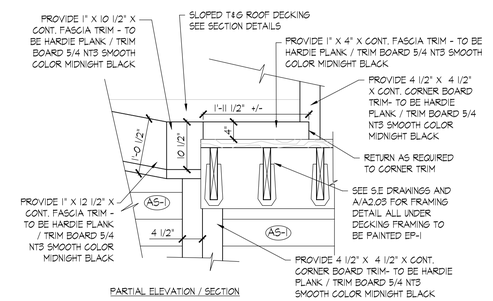

PARTIAL ELEVATION / SECTION

C / A2.01 DETAIL: T&G FASCIA @ PLATFORM DECK
SCALE: 3/4" = 1'-0"

© 2022 LDL STUDIO INC.

ARCHITECT OF RECORD:
LDL STUDIO
ARCHITECT / HOSPITALITY DESIGNER
LDL STUDIO, INC.
106 Putnam Street
Providence, RI 02909
P: 401.274.4516
F. 401.421.2631
www.ldlstudio.com
Architect of Record: Gary M. Lepore, AIA

CERTIFICATION:
GARY M. LEPORE
No. 7780
REGISTERED ARCHITECT

CONSULTANTS:
M/E/P & FP ENGINEER:
HP ENGINEERING CONSULTING ENGINEERS, P.C.
15 MAIDEN LANE
NORTH HAVEN, CT
P: 203-239-9425
JOHN PHILLIPS, P.E.

STRUCTURAL ENGINEER:
AMP ENGINEERING INC.
82 SCENIC DRIVE
WEST WARWICK , RI 02893
P: 401.559.3659
ANTHONY ROTONDO, P.E.

OWNER:
ROGER WILLIAMS PARK ZOO
RHODE ISLAND ZOOLOGICAL ASSOC. FOR THE ROGER WILLIAMS PARK ZOO
1000 ELMWOOD AVENUE
PROVIDENCE
RHODE ISLAND 02907

NUMBER	DATE	DESCRIPTION

REVISIONS:

PROJECT NAME:
RED PANDA EXHIBIT
RWPZ
1000 ELMWOOD AVENUE
PROVIDENCE
RHODE ISLAND 02907

SUBMISSION TYPE:
PERMIT SET

PROJECT TYPE:
NEW CONSTRUCTION

CLIENT NUMBER:
RWPZ 2022_01

ISSUE DATE: NOVEMBER 14, 2022

SHEET NAME:
PROPOSED BUILDING EXTERIOR ELEVATIONS

DRAWING SCALE:

PROJECT NUMBER:
2022-03

DATE ISSUED
11/14/2022

A2.01

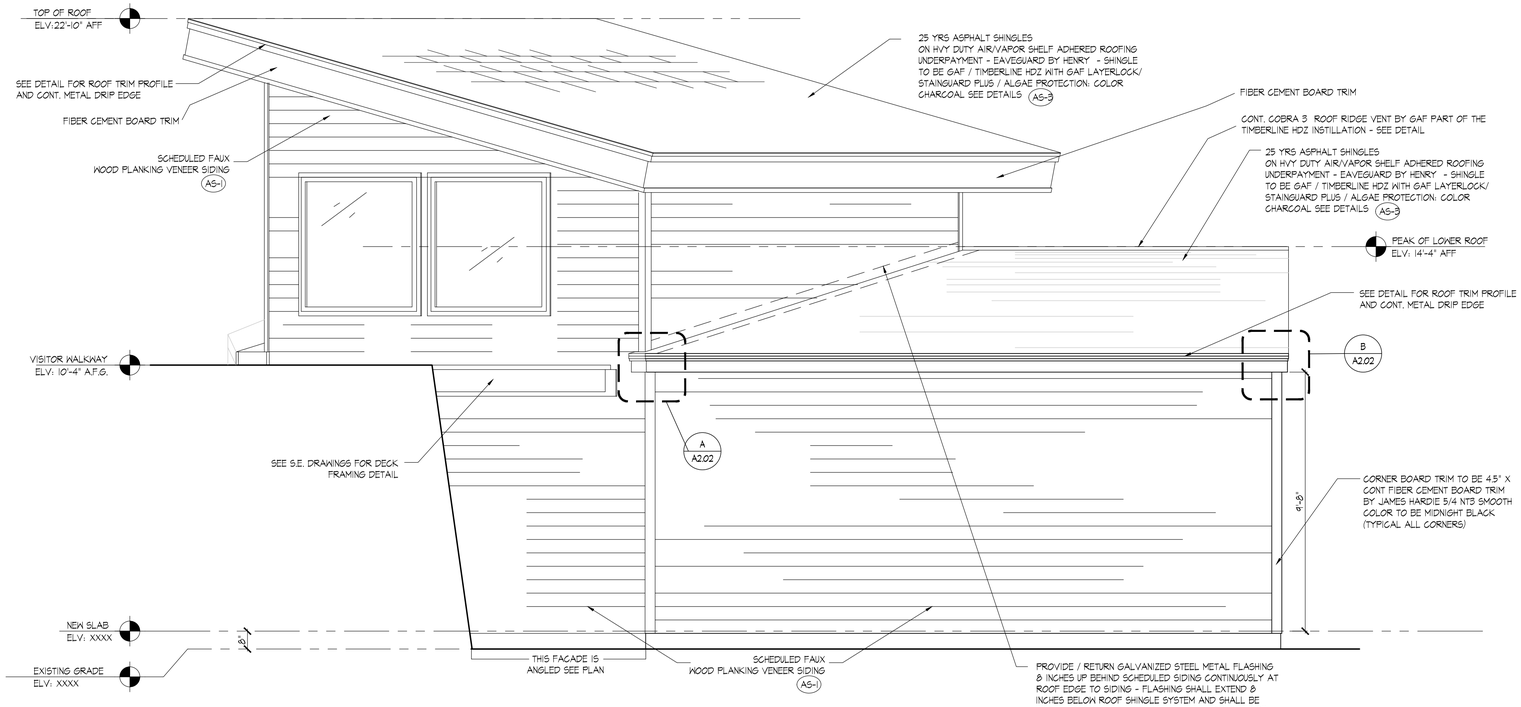

1 / A2.02 SOUTH ELEVATION
SCALE: 3/8"= 1'-0"

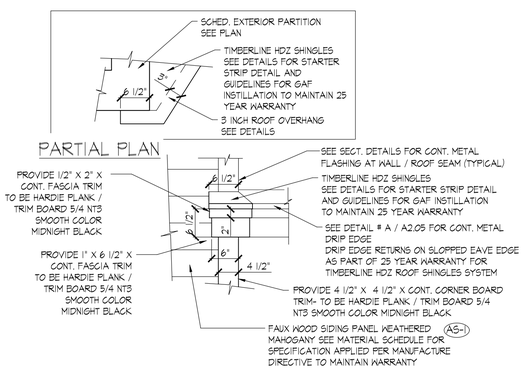

A / A2.02 DETAIL AT ROOF EAVE EXTENSION ON MAIN FACADE
SCALE: 3/4" = 1'-0"

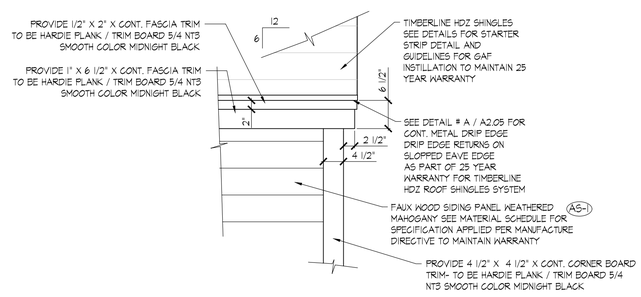

B / A2.02 DETAIL AT ROOF EAVE
SCALE: 3/4" = 1'-0"

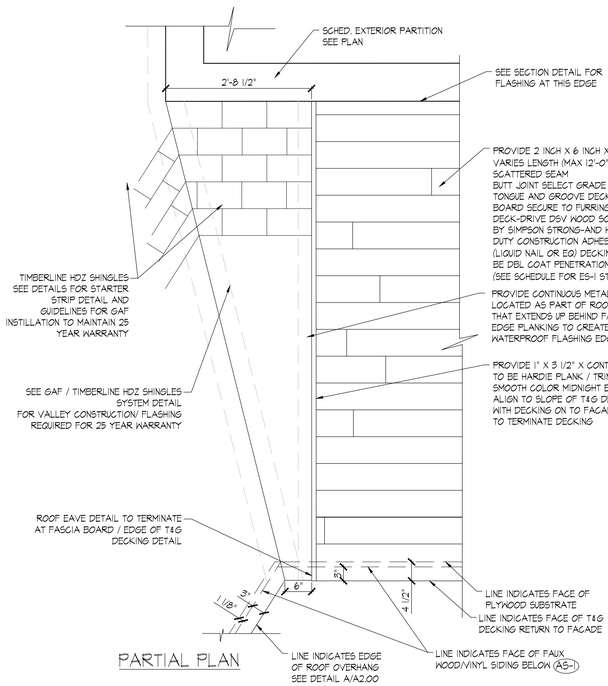

C / A2.02 DETAIL AT ROOF MATERIAL TRANSITION
SCALE: 3/4" = 1'-0"

© 2022 LDL STUDIO INC.

ARCHITECT OF RECORD:
LDL STUDIO
ARCHITECT / HOSPITALITY DESIGNER
LDL STUDIO, INC.
106 Putnam Street
Providence, RI 02909
P: 401.274.4516
F. 401.421.2631
www.ldlstudio.com
Architect of Record: Gary M. Lepore, AIA

CERTIFICATION:

CONSULTANTS:
M/E/P & FP ENGINEER:
HP ENGINEERING CONSULTING ENGINEERS, P.C.
15 MAIDEN LANE
NORTH HAVEN, CT
P: 203-239-9425
JOHN PHILLIPS, P.E.

STRUCTURAL ENGINEER:
AMP ENGINEERING INC.
82 SCENIC DRIVE
WEST WARWICK , RI 02893
P: 401.559.3659
ANTHONY ROTONDO, P.E.

OWNER:
RHODE ISLAND ZOOLOGICAL ASSOC. FOR THE ROGER WILLIAMS PARK ZOO
1000 ELMWOOD AVENUE
PROVIDENCE
RHODE ISLAND 02907

NUMBER	DATE	DESCRIPTION

REVISIONS:

PROJECT NAME:
RED PANDA EXHIBIT
RWPZ
1000 ELMWOOD AVENUE
PROVIDENCE
RHODE ISLAND 02907

SUBMISSION TYPE:
PERMIT SET

PROJECT TYPE:
NEW CONSTRUCTION

CLIENT NUMBER:
RWPZ 2022_01

ISSUE DATE: NOVEMBER 14, 2022

SHEET NAME:
PROPOSED BUILDING EXTERIOR ELEVATIONS & CONSTRUCTION DETAILS

DRAWING SCALE:
PROJECT NUMBER: 2022-03
DATE ISSUED: 11/14/2022

A2.02

ARCHITECTS AIA 2030 CHALLENGE ADOPTER
AWARD WINNING SERVICE 1995 - 2022
LDL STUDIO INC. - CELEBRATING 27 YEARS OF
WWW.LDLSTUDIO.COM
IF THIS SHEET IS NOT 24 X 36 IT IS A REDUCED SCALE PRINT. SCALE ACCORDINGLY

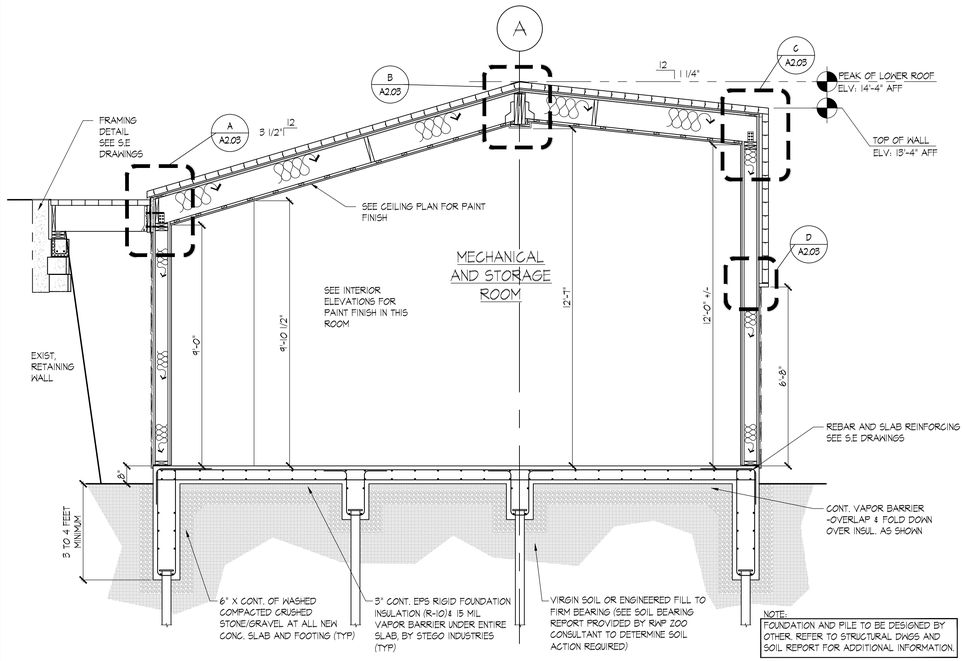

1 A2.03 BUILDING SECTIN A_A
SCALE: 3/8"= 1'-0"

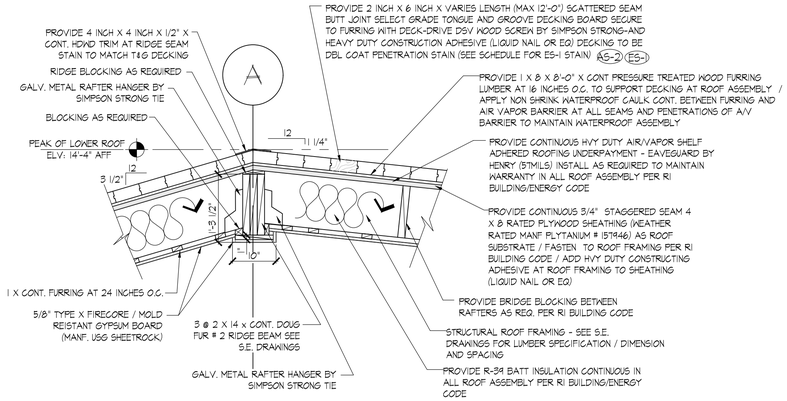

B A2.03 DETAIL AT LOWER ROOF RIDGE
SCALE: 3/4" = 1'-0"

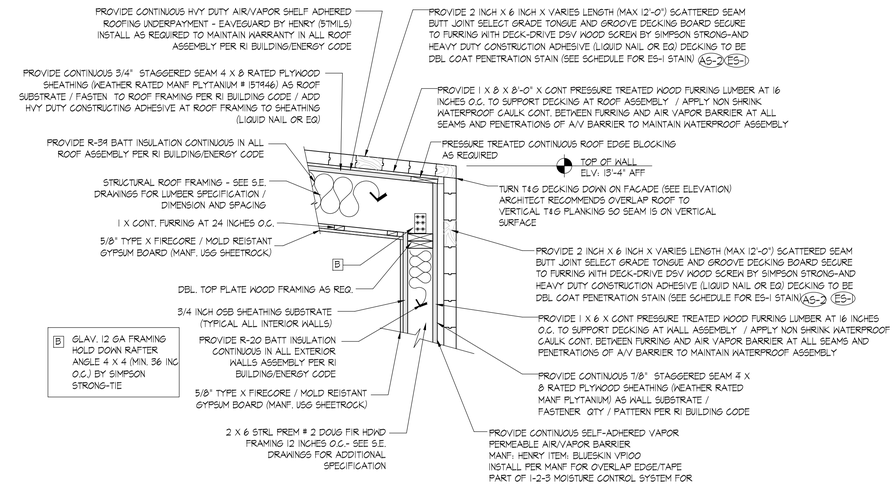

C A2.03 DETAIL AT LOWER ROOF TRANSITION TO FACADE
SCALE: 3/4" = 1'-0"

D A2.03 DETAIL AT BOTTOM OF VERTICAL T & G VERTICAL PLANKING ON FACADE
SCALE: 3/4" = 1'-0"

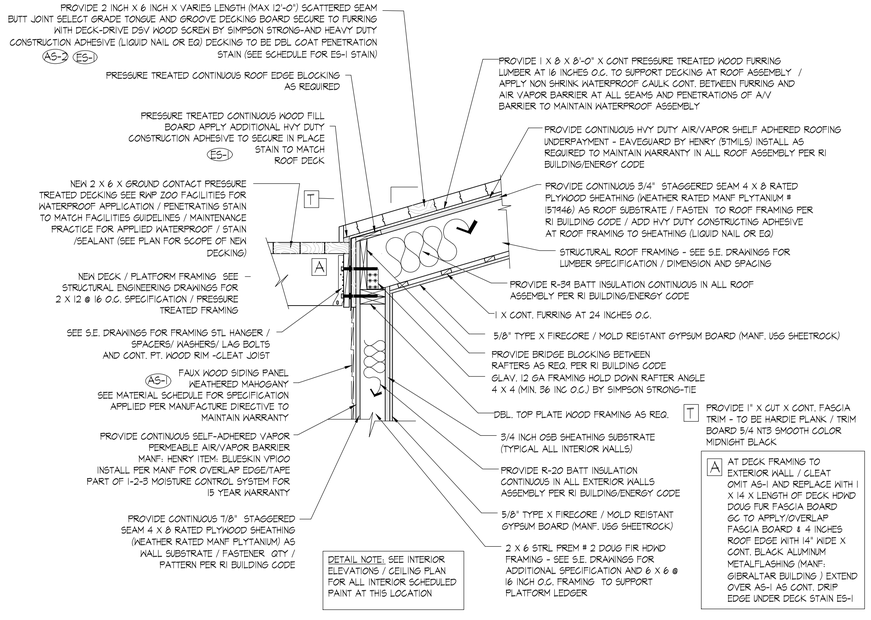

A A2.03 DETAIL AT ROOF EDGE TO VISITOR DECK
SCALE: 3/4" = 1'-0"

IF THIS SHEET IS NOT 24 X 36 IT IS A REDUCED SCALE PRINT - SCALE ACCORDINGLY
ARCHITECTS AIA 2030 CHALLENGE ADOPTER
LDL STUDIO INC. - CELEBRATING 27 YEARS OF AWARD WINNING SERVICE 1995 - 2022
WWW.LDLSTUDIO.COM

ARCHITECT OF RECORD:
LDL STUDIO
ARCHITECT / HOSPITALITY DESIGNER
LDL STUDIO, INC.
106 Putnam Street
Providence, RI 02909
P: 401.274.4516
F. 401.421.2631
www.ldlstudio.com
Architect of Record: Gary M. Lepore, AIA

CERTIFICATION:
GARY M. LEPORE
No. 7610
REGISTERED ARCHITECT

CONSULTANTS:
M/E/P & FP ENGINEER:
HP ENGINEERING CONSULTING ENGINEERS, P.C.
15 MAIDEN LANE
NORTH HAVEN, CT
P: 203-239-9425
JOHN PHILLIPS, P.E.

STRUCTURAL ENGINEER:
AMP ENGINEERING INC.
82 SCENIC DRIVE
WEST WARWICK , RI 02893
P: 401.559.3659
ANTHONY ROTONDO, P.E.

OWNER:
ROGER WILLIAMS PARK ZOO
RHODE ISLAND ZOOLOGICAL ASSOC. FOR THE ROGER WILLIAMS PARK ZOO
1000 ELMWOOD AVENUE
PROVIDENCE
RHODE ISLAND 02907

NUMBER	DATE	DESCRIPTION

REVISIONS:

PROJECT NAME:
RED PANDA EXHIBIT
RWPZ
1000 ELMWOOD AVENUE
PROVIDENCE
RHODE ISLAND 02907

SUBMISSION TYPE: PERMIT SET

PROJECT TYPE: NEW CONSTRUCTION

CLIENT NUMBER: RWPZ 2022_01

ISSUE DATE: NOVEMBER 14, 2022

SHEET NAME: BUILDING SECTION A_A & CONSTRUCTION DETAILS

DRAWING SCALE:

PROJECT NUMBER: 2022-03

DATE ISSUED: 11/14/2022

A2.03

© 2022 LDL STUDIO INC.

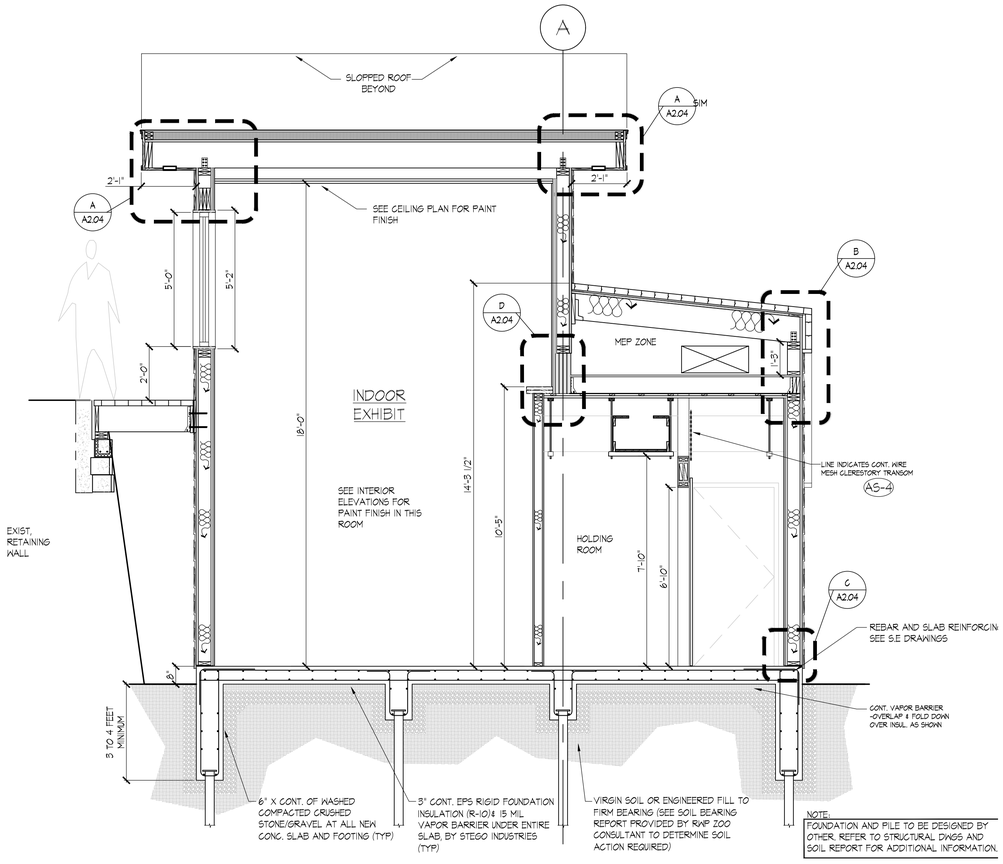

1 A2.04 BUILDING SECTIN B_B
SCALE: 3/8"= 1'-0"

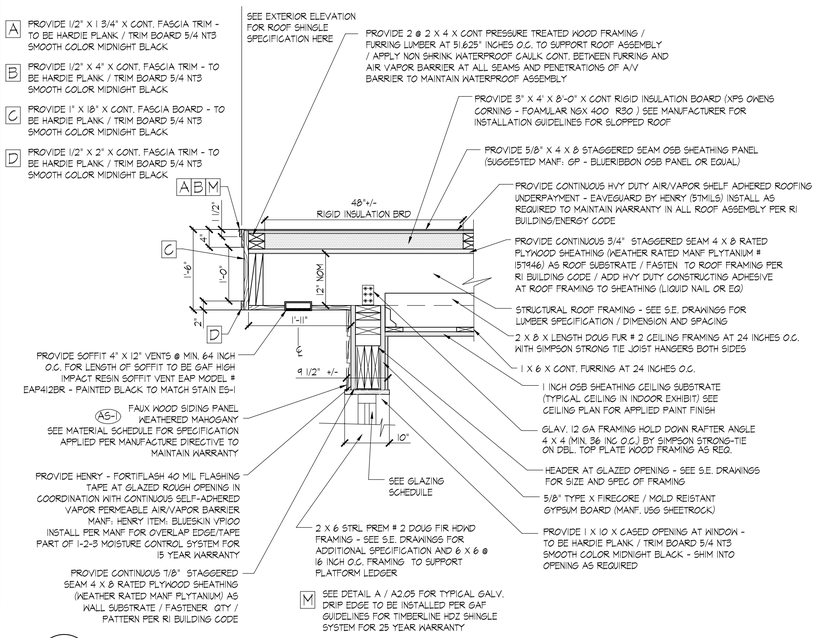

A A2.04 DETAIL AT UPPER ROOF EDGE AND MAIN VIEW WINDOW
SCALE: 3/4" = 1'-0"

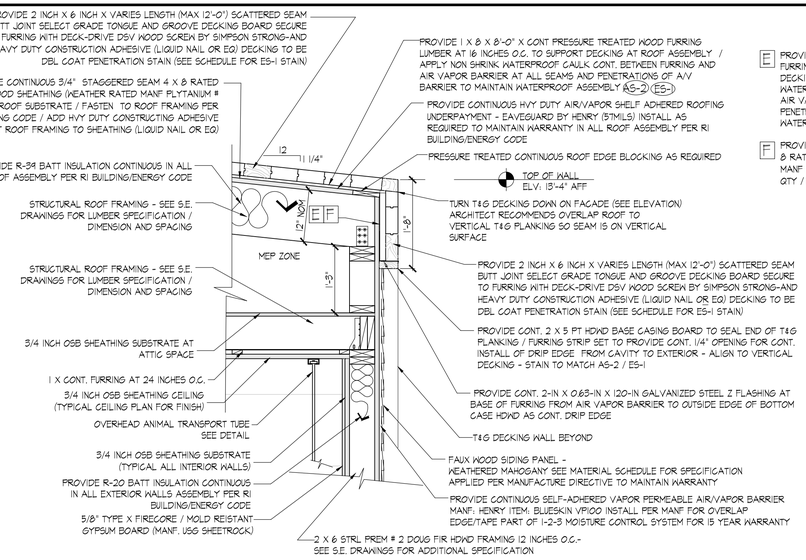

B A2.04 DETAIL AT MECH. ZONE ABOVE CORRIDOR / EXTERIOR WALL
SCALE: 3/4" = 1'-0"

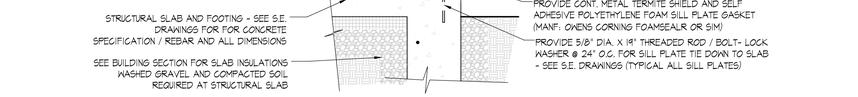

C A2.04 DETAIL AT MECH. TYPICAL EXTERIOR SILL PLATE TO SLAB
SCALE: 3/4" = 1'-0"

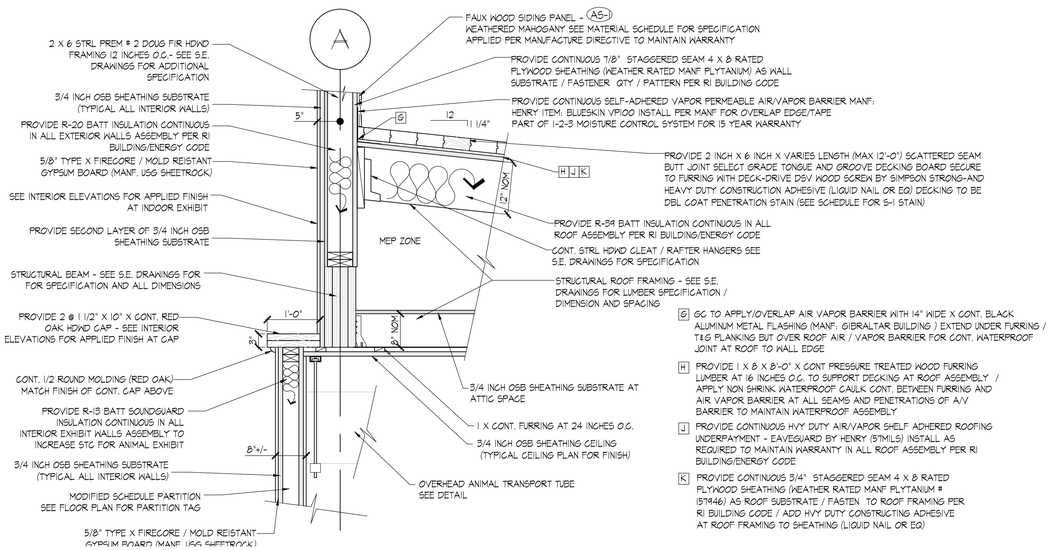

D A2.04 DETAIL AT MAIN STRUCTURAL BEAM
SCALE: 3/4" = 1'-0"

© 2022 LDL STUDIO INC.

ARCHITECT OF RECORD:
LDL STUDIO
ARCHITECT / HOSPITALITY DESIGNER
LDL STUDIO, INC.
106 Putnam Street
Providence, RI 02909
P: 401.274.4516
F. 401.421.2631
www.ldlstudio.com
Architect of Record: Gary M. Lepore, AIA

CERTIFICATION:
GARY M. LEPORE
No. 7810
REGISTERED ARCHITECT

CONSULTANTS:
M/E/P & FP ENGINEER:
HP ENGINEERING CONSULTING ENGINEERS, P.C.
15 MAIDEN LANE
NORTH HAVEN, CT
P: 203-239-9425
JOHN PHILLIPS, P.E.

STRUCTURAL ENGINEER:
AMP ENGINEERING INC.
82 SCENIC DRIVE
WEST WARWICK , RI 02893
P: 401.559.3659
ANTHONY ROTONDO, P.E.

OWNER:
ROGER WILLIAMS PARK ZOO
RHODE ISLAND ZOOLOGICAL ASSOC. FOR THE ROGER WILLIAMS PARK ZOO
1000 ELMWOOD AVENUE
PROVIDENCE
RHODE ISLAND 02907

NUMBER	DATE	DESCRIPTION

REVISIONS:

PROJECT NAME:
RED PANDA EXHIBIT
RWPZ
1000 ELMWOOD AVENUE
PROVIDENCE
RHODE ISLAND 02907

SUBMISSION TYPE:
PERMIT SET

PROJECT TYPE:
NEW CONSTRUCTION

CLIENT NUMBER:
RWPZ 2022_01

ISSUE DATE: NOVEMBER 14, 2022

SHEET NAME:
BUILDING SECTION B_B & CONSTRUCTION DETAILS

DRAWING SCALE:

PROJECT NUMBER:
2022-03

DATE ISSUED:
11/14/2022

A2.04

IF THIS SHEET IS NOT 24 X 36 IT IS A REDUCED SCALE PRINT - SCALE ACCORDINGLY
WWW. LDLSTUDIO.COM LDL STUDIO INC. - CELEBRATING 27 YEARS OF AWARD WINNING SERVICE 1995 - 2022 ARCHITECTS AIA 2030 CHALLENGE ADOPTER

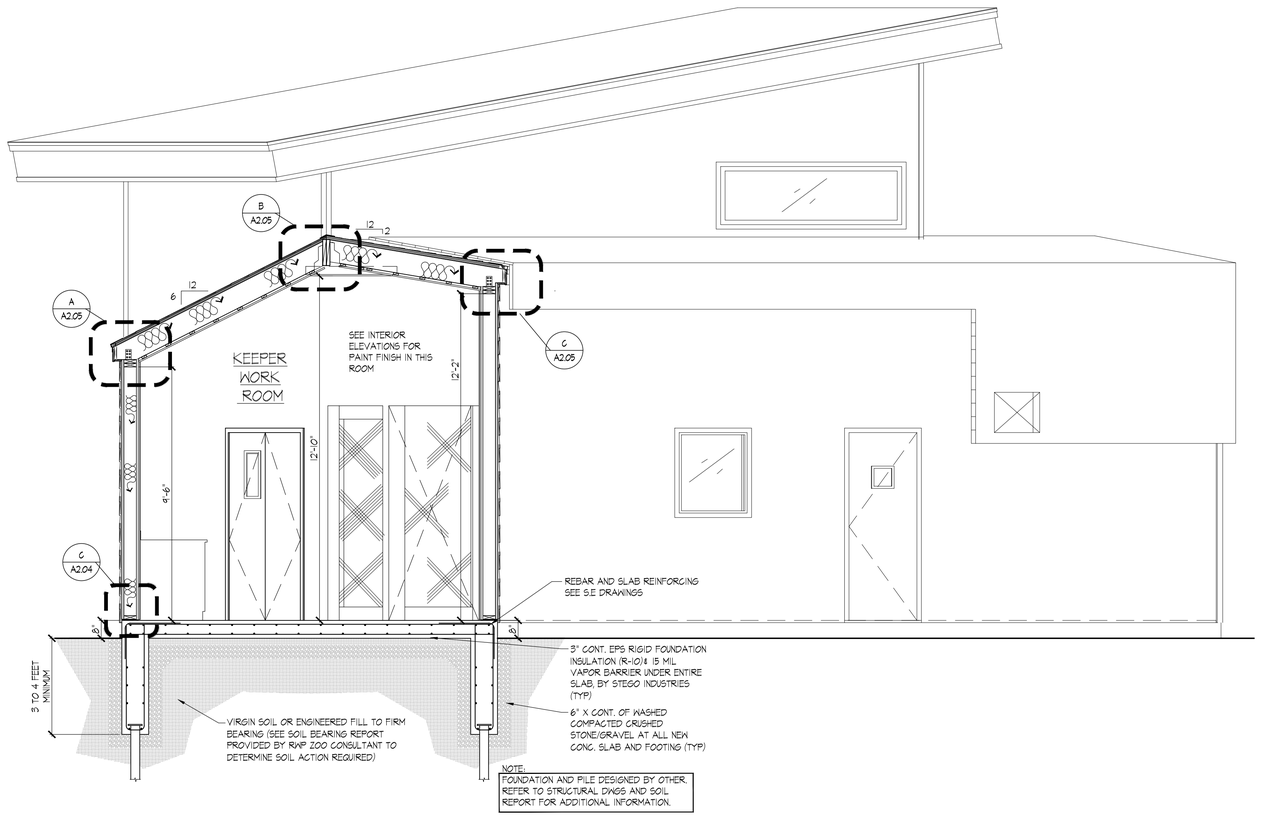

1 A2.05 BUILDING SECTIN C_C
SCALE: 3/8"= 1'-0"

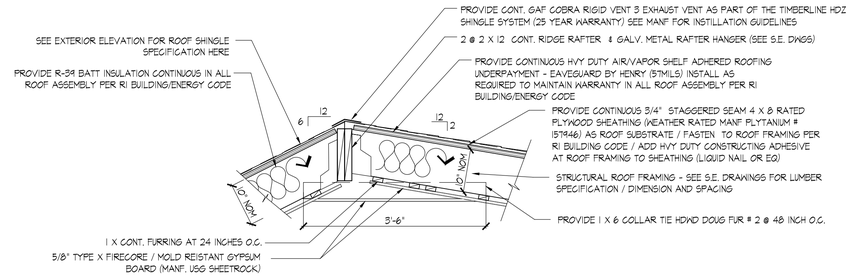

B A2.05 DETAIL AT ROOF RIDGE
SCALE: 3/4" = 1'-0"

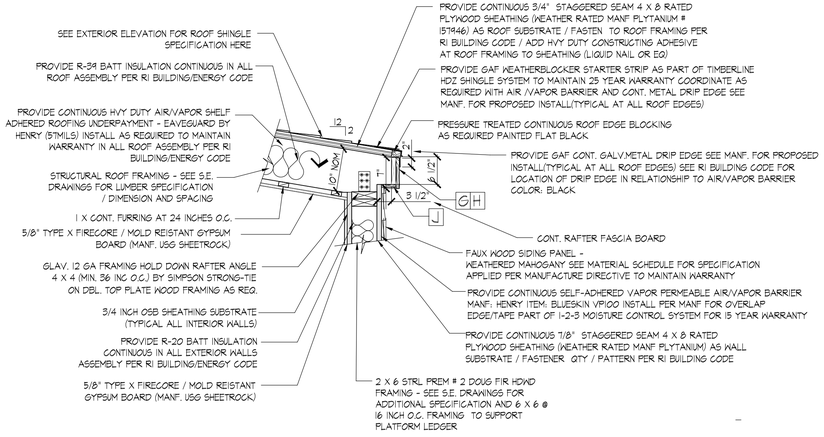

C A2.05 DETAIL AT ROOF EAVE & SOFFIT NORTH/ EAST FACADE
SCALE: 3/4" = 1'-0"

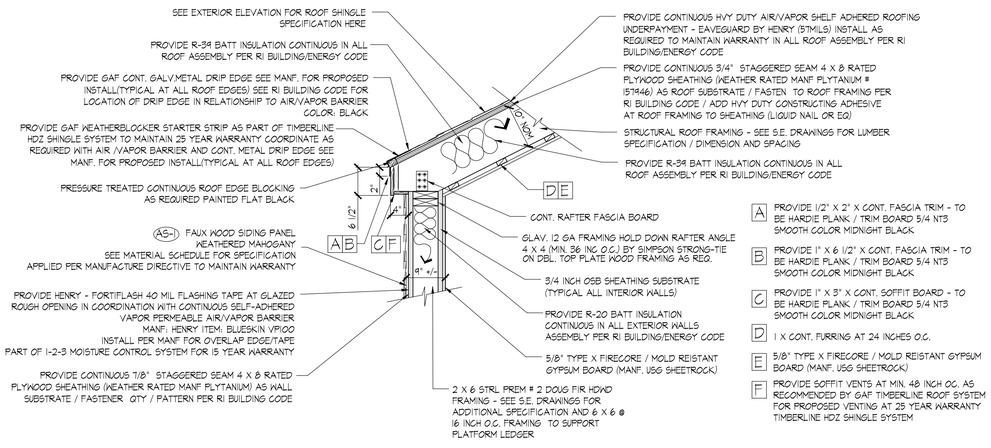

A DETAIL AT ROOF EAVE / SOFFIT
A2.05 SCALE: 3/4" = 1'-0"

A PROVIDE 1/2" X 2" X CONT. FASCIA TRIM - TO BE HARDIE PLANK / TRIM BOARD 5/4 NT3 SMOOTH COLOR MIDNIGHT BLACK

B PROVIDE 1" X 6 1/2" X CONT. FASCIA TRIM - TO BE HARDIE PLANK / TRIM BOARD 5/4 NT3 SMOOTH COLOR MIDNIGHT BLACK

C PROVIDE 1" X 3" X CONT. SOFFIT BOARD - TO BE HARDIE PLANK / TRIM BOARD 5/4 NT3 SMOOTH COLOR MIDNIGHT BLACK

D 1 X CONT. FURRING AT 24 INCHES O.C.

E 5/8" TYPE X FIRECORE / MOLD REISTANT GYPSUM BOARD (MANF. USG SHEETROCK)

F PROVIDE SOFFIT VENTS AT MIN. 48 INCH OC. AS RECOMMENDED BY GAF TIMBERLINE ROOF SYSTEM FOR PROPOSED VENTING AT 25 YEAR WARRANTY TIMBERLINE HDZ SHINGLE SYSTEM

ARCHITECTS AIA 2030 CHALLENGE ADOPTER
SCALE 0 1" SCALE 1 3"
SCALE 0 1 1/2" SCALE 2 1/2"
SCALE 0 1" SCALE 3 1"
SCALE 0 3/4" SCALE 4 3/4"
IF THIS SHEET IS NOT 24 X 36 IT IS A REDUCED SCALE PRINT - SCALE ACCORDINGLY
SCALE 0 3/4" SCALE 6 1/2"
SCALE 0 1/2" SCALE 8 1/4"
SCALE 0 1/4" SCALE 12 1"
SCALE 0 1/8" SCALE 16 1 1/2"
SCALE 0 1/8" SCALE 20 1 7/8"
SCALE 0 1/16" SCALE 40 3"
SERVICE 1995 - 2022
LDL STUDIO INC. - CELEBRATING 27 YEARS OF AWARD WINNING
WWW.LDLSTUDIO.COM

ARCHITECT OF RECORD:
LDL STUDIO
ARCHITECT / HOSPITALITY DESIGNER
LDL STUDIO, INC.
106 Putnam Street
Providence, RI 02909
P: 401.274.4516
F. 401.421.2631
www.ldlstudio.com
Architect of Record: Gary M. Lepore, AIA

CERTIFICATION:
GARY M. LEPORE
No. 7980
REGISTERED ARCHITECT

CONSULTANTS:
M/E/P & FP ENGINEER:
HP ENGINEERING CONSULTING ENGINEERS, P.C.
15 MAIDEN LANE
NORTH HAVEN, CT
P: 203-239-9425
JOHN PHILLIPS, P.E.

STRUCTURAL ENGINEER:
AMP ENGINEERING INC.
82 SCENIC DRIVE
WEST WARWICK , RI 02893
P: 401.559.3659
ANTHONY ROTONDO, P.E.

OWNER:
ROGER WILLIAMS PARK ZOO
RHODE ISLAND ZOOLOGICAL ASSOC. FOR THE ROGER WILLIAMS PARK ZOO
1000 ELMWOOD AVENUE
PROVIDENCE
RHODE ISLAND 02907

NUMBER	DATE	DESCRIPTION

REVISIONS:

PROJECT NAME:
RED PANDA EXHIBIT
RWPZ
1000 ELMWOOD AVENUE
PROVIDENCE
RHODE ISLAND 02907

SUBMISSION TYPE:
PERMIT SET

PROJECT TYPE:
NEW CONSTRUCTION

CLIENT NUMBER:
RWPZ 2022_01

ISSUE DATE: NOVEMBER 14, 2022

SHEET NAME:
BUILDING SECTION C_C
& CONSTRUCTION DETAILS

DRAWING SCALE:
PROJECT NUMBER: 2022-03
DATE ISSUED: 11/14/2022
A2.05

© 2022 LDL STUDIO INC.

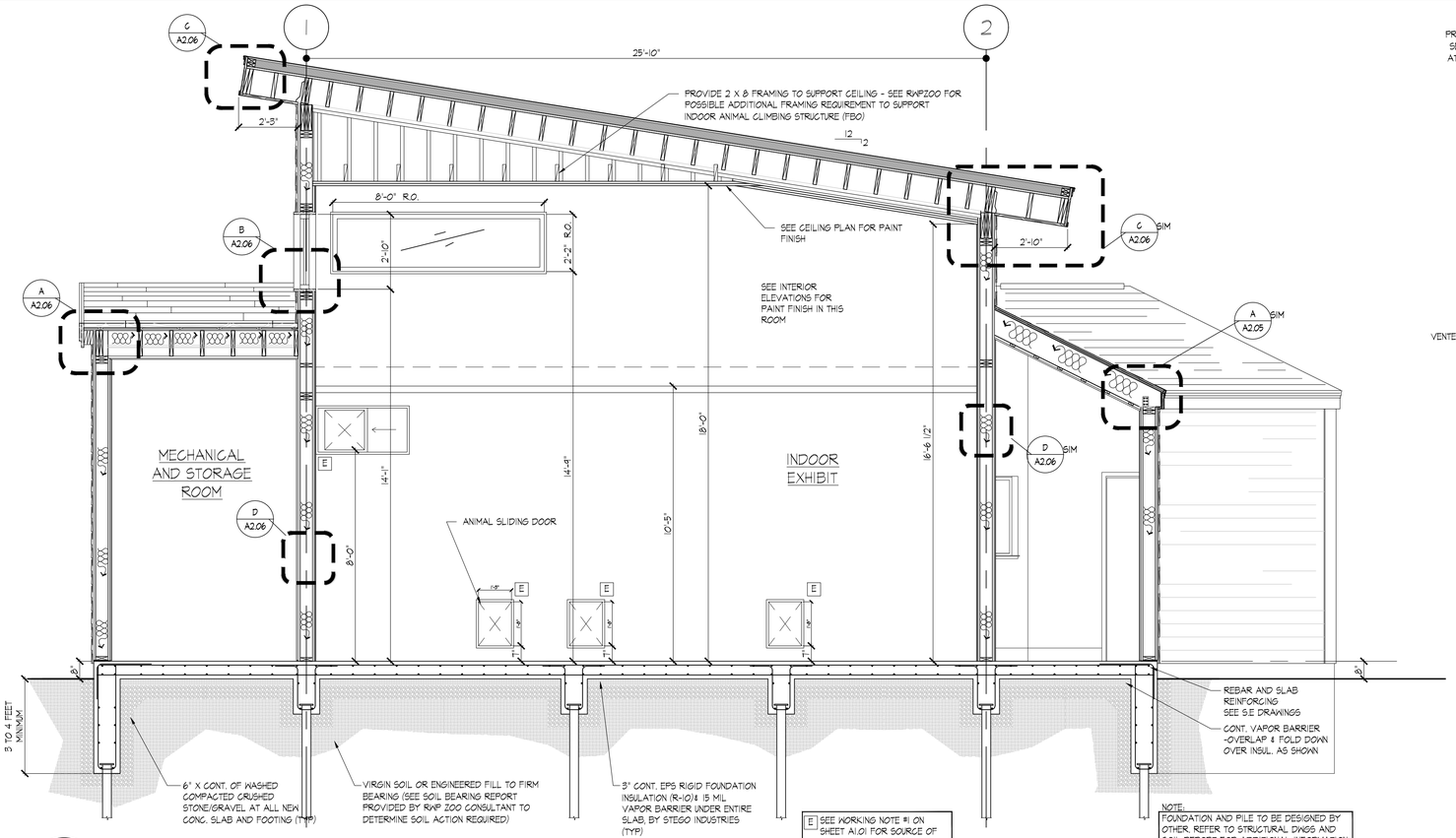

1 / A2.05 BUILDING SECTIN C_C
SCALE: 3/8"= 1'-0"

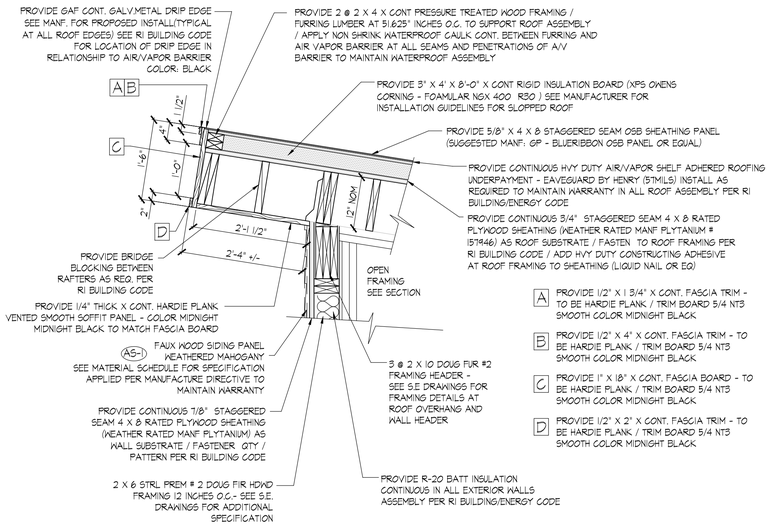

C / A2.06 DETAIL AT UPPER ROOF OVERHANG
SCALE: 3/4" = 1'-0"

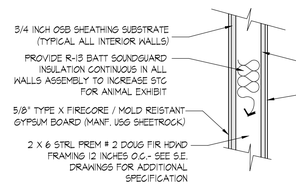

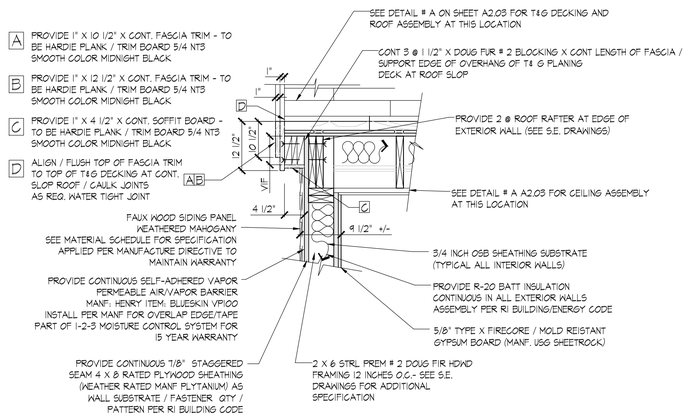

A / A2.06 DETAIL AT EDGE OF T& G SLOPPED DECKING ROOF
SCALE: 3/4" = 1'-0"

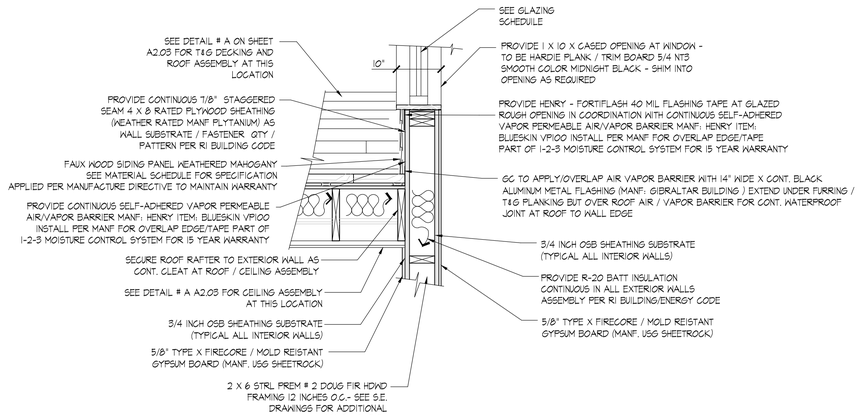

B / A2.06 DETAIL AT GALZED OPENING AND T&G ROOF DECKING
SCALE: 3/4" = 1'-0"

D / A2.06 PARTITION DETAIL @ MECH ROOM TO INDOOR EXHIBIT
SCALE: 1" = 1'-0"

ARCHITECT OF RECORD:
LDL STUDIO
ARCHITECT / HOSPITALITY DESIGNER
LDL STUDIO, INC.
106 Putnam Street
Providence, RI 02909
P: 401.274.4516
F. 401.421.2631
www.ldlstudio.com
Architect of Record: Gary M. Lepore, AIA

CERTIFICATION:
GARY M. LEPORE
No. 10,160
REGISTERED ARCHITECT

CONSULTANTS:
M/E/P & FP ENGINEER:
HP ENGINEERING CONSULTING ENGINEERS, P.C.
15 MAIDEN LANE
NORTH HAVEN, CT
P: 203-239-9425
JOHN PHILLIPS, P.E.

STRUCTURAL ENGINEER:
AMP ENGINEERING INC.
82 SCENIC DRIVE
WEST WARWICK , RI 02893
P: 401.559.3659
ANTHONY ROTONDO, P.E.

OWNER:
ROGER WILLIAMS PARK ZOO
RHODE ISLAND ZOOLOGICAL ASSOC. FOR THE ROGER WILLIAMS PARK ZOO
1000 ELMWOOD AVENUE
PROVIDENCE
RHODE ISLAND 02907

NUMBER	DATE	DESCRIPTION
REVISIONS:		

PROJECT NAME:
RED PANDA EXHIBIT
RWPZ
1000 ELMWOOD AVENUE
PROVIDENCE
RHODE ISLAND 02907

SUBMISSION TYPE:
PERMIT SET

PROJECT TYPE:
NEW CONSTRUCTION

CLIENT NUMBER:
RWPZ 2022_01

ISSUE DATE: NOVEMBER 14, 2022

SHEET NAME:
BUILDING SECTION 1_1
& CONSTRUCTION DETAILS

DRAWING SCALE:

PROJECT NUMBER:
2022-03

DATE ISSUED:
11/14/2022

SHEET NUMBER:
A2.06

© 2022 LDL STUDIO INC.

IF THIS SHEET IS NOT 24 X 36 IT IS A REDUCED SCALE PRINT - SCALE ACCORDINGLY
WWW.LDLSTUDIO.COM LDL STUDIO INC. - CELEBRATING 27 YEARS OF AWARD WINNING SERVICE 1995 - 2022 ARCHITECTS AIA 2030 CHALLENGE ADOPTER

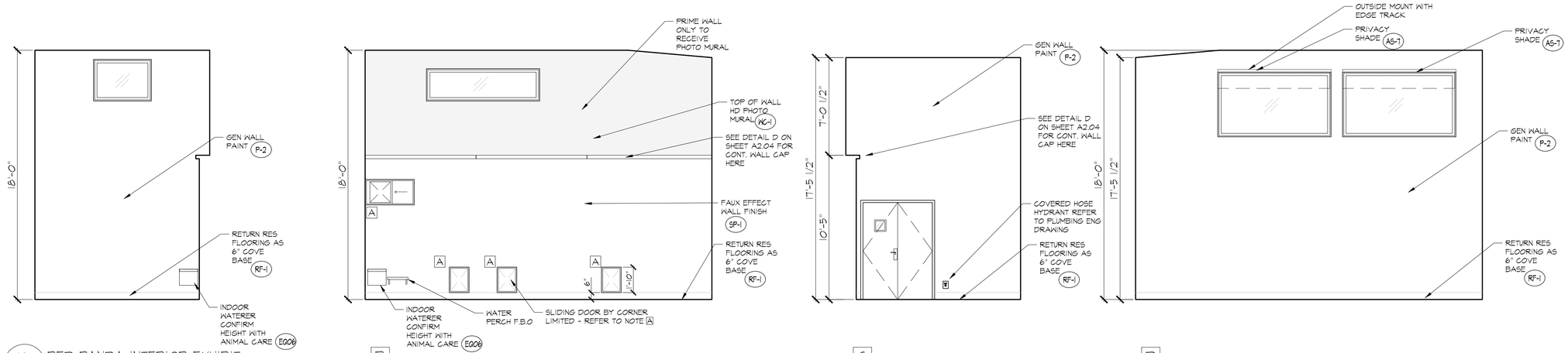

1A A3.00 RED PANDA INTERIOR EXHIBIT
SCALE: 1/4" = 1'-0"

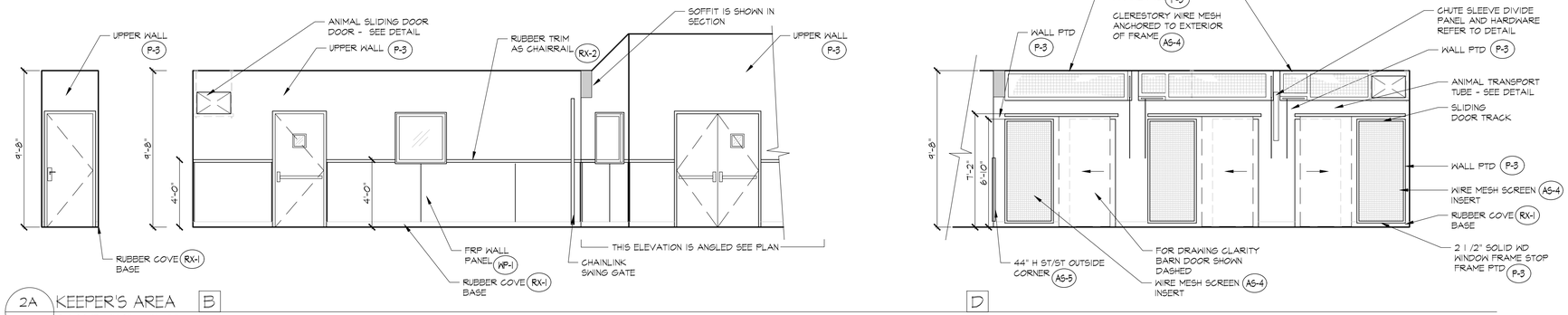

2A A3.00 KEEPER'S AREA B
SCALE: 1/4" = 1'-0"

D

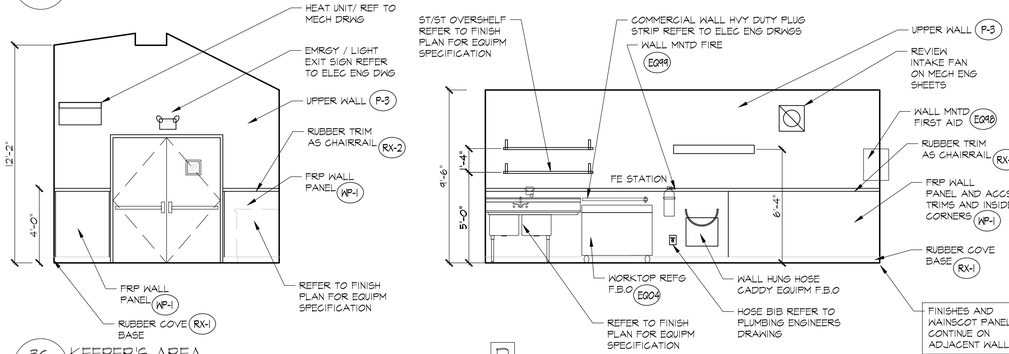

3C A3.00 KEEPER'S AREA
SCALE: 1/4" = 1'-0"

D A

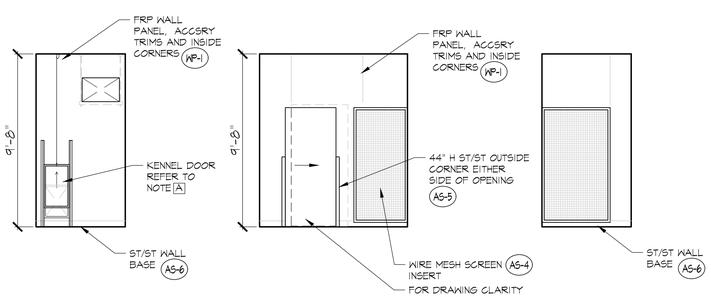

4A A3.00 HOLDING #3 (TYPICAL) B C D TYPICAL
SCALE: 1/4" = 1'-0"

NOTE A

SLIDING DOOR SPECS:

INSTALLED BY CORNERS LIMITED

CONTACT:
JEFF SMITH
OPERATION MANAGER
269-207-0088

DOOR NOTE:

GC TO PROVIDE BLOCKING AS REQUIRED FOR INSTALLATION.

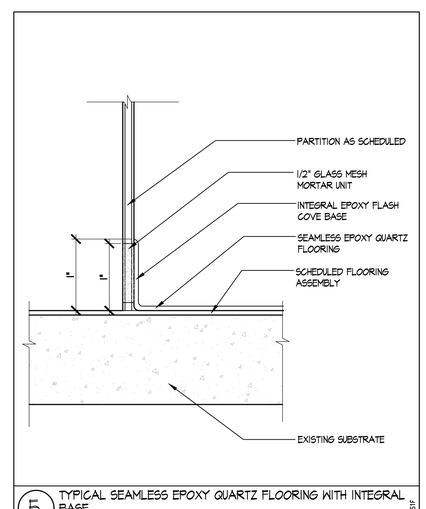

5 TYPICAL SEAMLESS EPOXY QUARTZ FLOORING WITH INTEGRAL BASE
SCALE: 3" = 1'-0"

© 2022 LDL STUDIO INC.

IF THIS SHEET IS NOT 24 X 36 IT IS A REDUCED SCALE PRINT - SCALE ACCORDINGLY
WWW.LDLSTUDIO.COM LDL STUDIO INC. - CELEBRATING 27 YEARS OF AWARD WINNING SERVICE 1995 - 2022 ARCHITECTS AIA 2030 CHALLENGE ADOPTER

ARCHITECT OF RECORD:
LDL STUDIO
ARCHITECT / HOSPITALITY DESIGNER
LDL STUDIO, INC.
106 Putnam Street
Providence, RI 02909
P: 401.274.4516
F. 401.421.2631
www.ldlstudio.com
Architect of Record: Gary M. Lepore, AIA

CERTIFICATION:

CONSULTANTS:

M/E/P & FP ENGINEER:
HP ENGINEERING CONSULTING ENGINEERS, P.C.
15 MAIDEN LANE
NORTH HAVEN, CT
P: 203-239-9425
JOHN PHILLIPS, P.E.

STRUCTURAL ENGINEER:
AMP ENGINEERING INC.
82 SCENIC DRIVE
WEST WARWICK , RI 02893
P: 401.559.3659
ANTHONY ROTONDO, P.E.

OWNER:
RHODE ISLAND ZOOLOGICAL ASSOC.
FOR THE ROGER WILLIAMS PARK ZOO
1000 ELMWOOD AVENUE
PROVIDENCE
RHODE ISLAND 02907

NUMBER	DATE	DESCRIPTION

REVISIONS:

PROJECT NAME:
RED PANDA EXHIBIT
RWPZ
1000 ELMWOOD AVENUE
PROVIDENCE
RHODE ISLAND 02907

SUBMISSION TYPE:
PERMIT SET

PROJECT TYPE:
NEW CONSTRUCTION

CLIENT NUMBER:
RWPZ 2022_01

ISSUE DATE: NOVEMBER 14, 2022

SHEET NAME:
INTERIOR ELEVAITONS

DRAWING SCALE:

PROJECT NUMBER
2022-03

DATE ISSUED
11/14/2022

A3.00

ARCHITECTS AIA 2030 CHALLENGE ADOPTER

LDL STUDIO INC. - CELEBRATING 27 YEARS OF AWARD WINNING SERVICE 1995 - 2022

WWW.LDLSTUDIO.COM

IF THIS SHEET IS NOT 24 X 36 IT IS A REDUCED SCALE PRINT - SCALE ACCORDINGLY

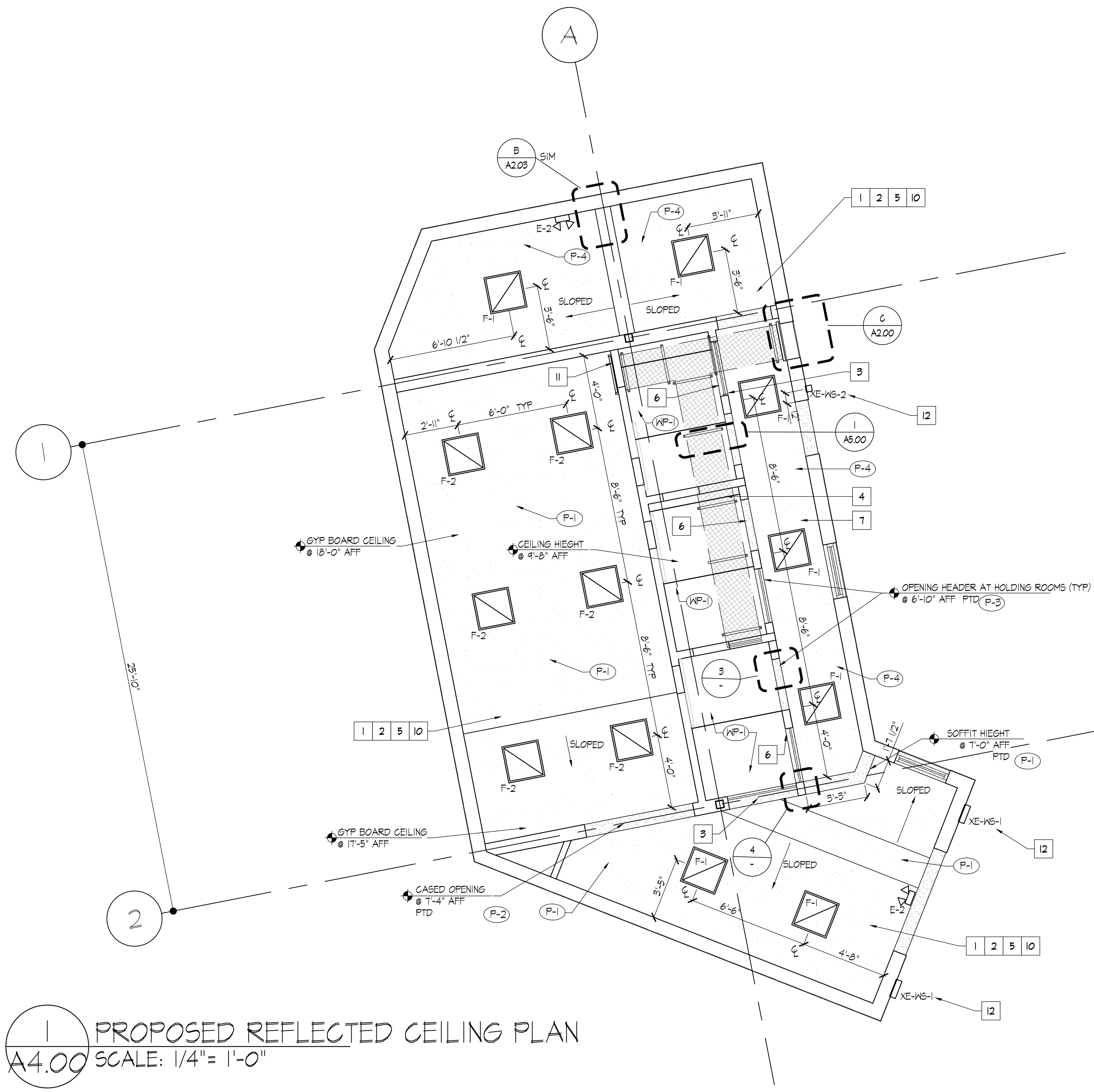

1 / A4.00 PROPOSED REFLECTED CEILING PLAN
SCALE: 1/4"= 1'-0"

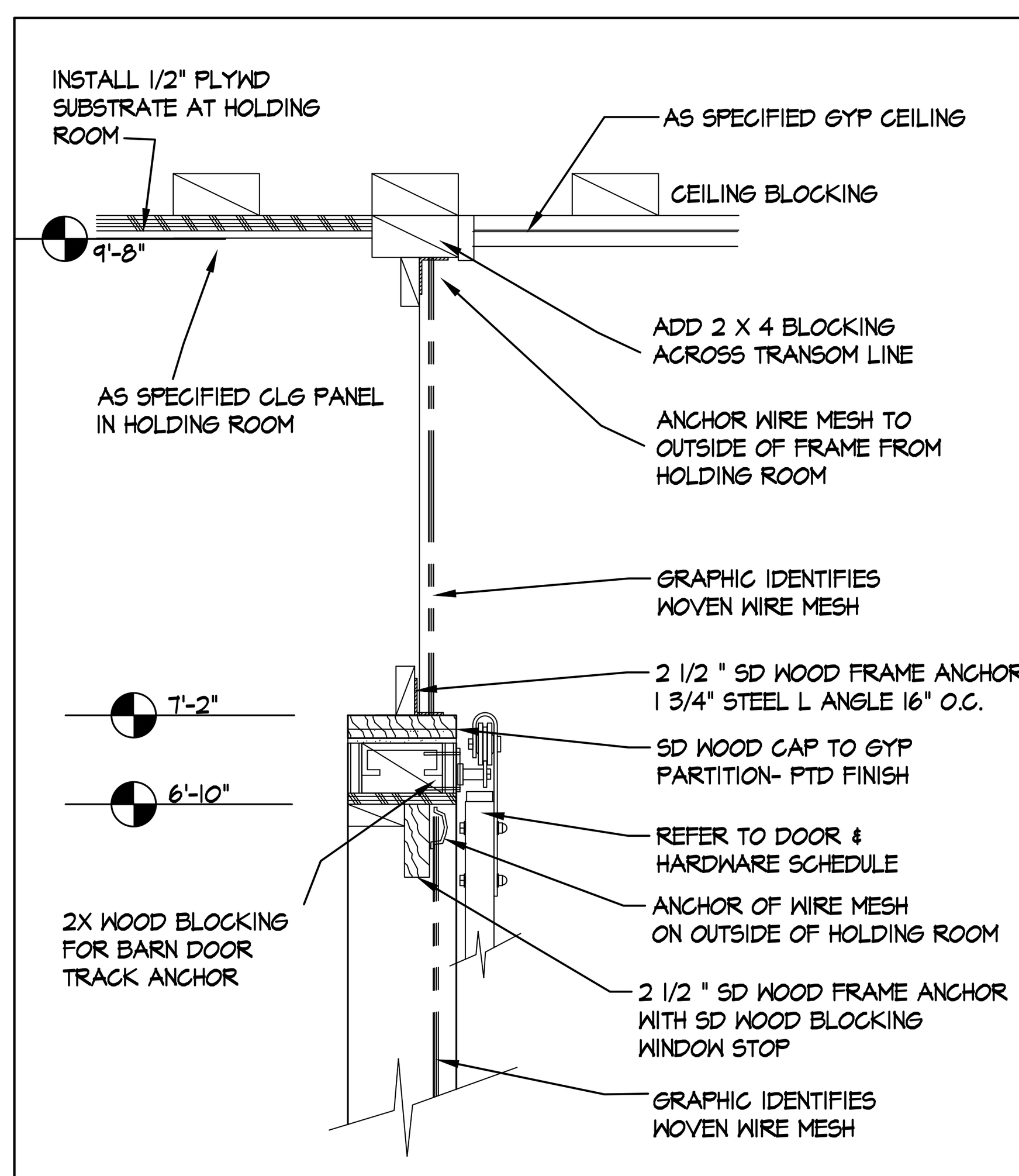

03 TYPICAL FRAMING AT HEADER /TRANSOM AT HOLDING IDENTIFIES CEILING SUBSTRATE
SCALE: 1-1/2" = 1'-0"

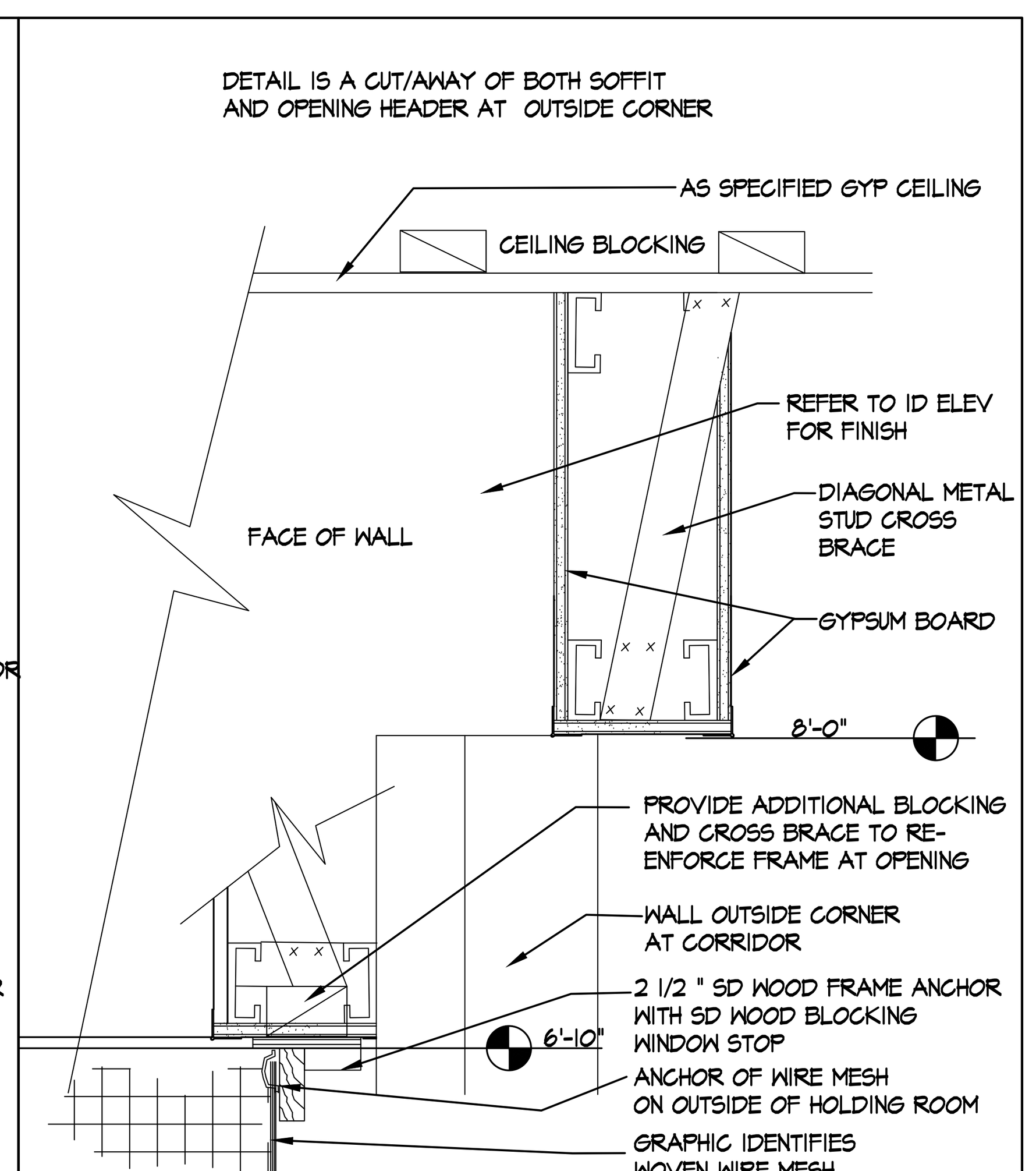

04 CROSS SECTION AT SOFFIT/FASCIA AND OPENING DETAIL
SCALE: 1-1/2" = 1'-0"

LEGEND

DESCRIPTION	SYMBOL	EXST.
RECESSED DOWN LIGHT	A -	EA-
REC WALL WASH	B -	ED-
TRACK FIXTURES	C -	EC-
PENDANT/CHANDALIER FXTR	D -	ED-
EXTERIOR FIXTURE	XE -	EXE-
EMERGENCY EXIT SIGN	E-1	EEM-1
EMERGENCY WALL PAK	E-2	EEM-2
COMBINATION EXIT SIGN	E-3	EEM-3
EMERGENCY SMOKE SENSOR	SD-1	ESD-
EMERGENCY HEAT SENSOR	HD-1	EHD-
STROBE/VISUAL FIRE ALARM	SB-	ESB-
PULL STATION	FP	EFP-
FLUORESCENT FIXTR	F -	EF-
ACCESS PANEL / DOOR	AP -	EAP-
CEILING FAN	FN -	EFN -
SURFACE MOUNT FIXTURE	G -	EG-
CABINET MNTD PUCK FIXTR	H -	EH-
MONO ADJUSTABLE PT / FIXT.	M -	EM-
SPECIALTY MNTD FIXTR	R -	ER-
SURFACE MNTD MONO PT	S -	ES-
REC. STEREO SPEAKER	SPK-	ESPK-
TRACK INDICATOR SYMBL INDCTS LENGTH	T -O'	ETK-
SECURITY CAMERAS		
WALL MOUNTED SCONCE	WS -	EWS-
COVE / LT. STRIP	X -	EX -
HVAC DIFFUSER / SUPPLY		
HVAC DIFFUSER / 3 WAY		
HVAC DIFFUSER /1 WAY		
HVAC DIFFUSER / RETURN		
LINEAR DIFFUSER		
DIFFUSER BLANK SECTION		
GYPSUM WALLBOARD		
ACOUSTICAL CEILING TILE		
ACOUSTICAL NOISE REDUCTION PANEL		
VIDEO / DIGITAL DISPLAY SCREEN (SEE SCHEDULE)	DS -	EDS-

GENERAL NOTE:
1) SEE LIGHTING FIXT. SCHEDULE - ALL FIXTURES MAYBE LAMPED / BULB WITH AN LED LAMP SOURCE - FIXTURE MAYBE IDENTIFIED BASED ON THIS SCHEDULE - BUT FURNISHED AS LED FIXT.
2) FIXTURE WITH PREFIX OF "XE-" WILL BE AN EXTERIOR FIXTURE SEE SCHEDULE FOR CRITERIA
3) CEILING PLAN SHOWN FOR COORDINATION - GC / ELECTRICAL SUB-CONTRACTOR TO REVIEW ELECTRICAL DRAWINGS FOR FULL LIGHTING SCOPE OF WORK

WORKING NOTES:

1 SEE M/E/P ENGINEERING DRAWINGS AND FIRE SPRINKLER DRAWINGS FOR FULL COORDINATION AT CEILING - GC TO IDENTIFY CONFLICT PRIOR TO INSTALL

2 G.C. TO REVIEW ALL SWITCHING LOCATIONS AND OCCUPANCY SENSOR REQUIREMENTS WITH OWNER.

3 HEADER AT THIS LOCATION TO BE 6'-10" AFF

4 SEE ENLARGED DETAIL FOR FABRICATION AND MOUNTING BRACKETS FOR OVERHEAD ANIMAL TRANSFER TUBE SYSTEM

5 G.C. WILL FURNISH ALL NECESSARY CONTROL JOINTS AND EXPANSION JOINTS AS REQUIRED PER USG GYPSUM CONSTRUCTION HANDBOOK AND ALL CURRENT APPLICABLE CODES FOR A LEVEL THREE FINISH

6 GC TO FRAME THIS AS A CASED FINISHED OPENING WITH METAL TRIM (SEE DETAIL) TO RECEIVE ANIMAL CAGING FRAME

7 WHEN NOTED INSTALLER TO CENTER FIXTURES IN X AND Y AXIS BETWEEN ADJACENT ARCHITECTURAL ELEMENTS AND OR ADJACENT WALLS

8 GYPSUM SOFFIT AT THIS LOCATION TO BE AT 8'-0" AFF - NOTE SEE INTERIOR ELEVATION FOR SCHEDULED FINISH TO MATCH ADJ. WALL

9 SEE DETAILS ALL DEVICES AND FIXTURES TO BE CENTERED IN CEILING TILE UNLESS OTHERWISE INDICATED (TYP. IN ALL ACT - #)

10 SEE ELECTRICAL ENGINEERING DRAWINGS FOR ALL SPECIFICATIONS AND LIGHT SCHEDULE - ARCHITECT'S CEILING PLAN SHOWN FOR COORDINATION OF ALL CEILING ELEMENTS AND LIGHTING FIXTURE LOCATIONS - GC TO COORDINATE BETWEEN THIS DRAWING AND ELECTRICAL ENGINEERING DRAWINGS.

11 SEE ELEVATION FOR DETAIL TAG OF ANIMAL DOOR AT THIS LOCATION

12 SEE EXTERIOR ELEVATION FOR MOUNTING HEIGHT OF FIXTURE

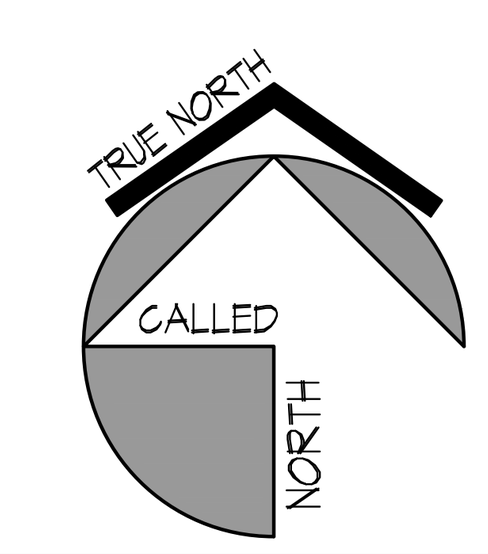

GENERAL NOTES:

1. THESE DRAWINGS HAVE BEEN COMPILED FROM THE BEST AVAILABLE INFORMATION AND ARE NOT INTENDED TO LIMIT THE SCOPE OF THE WORK. THE CONTRACTOR MAY ENCOUNTER COORDINATION OR CONFLICTS WITH OTHER CONSTRUCTION, NOT INDICATED IN THESE DOCUMENTS, REQUIRING THE CONTRACTOR TO PROVIDE ADDITIONAL WORK FOR THE COMPLETION OF HIS OR HER CONTRACT. IT WILL BE ASSUMED THAT THE CONTRACTOR HAS INSPECTED THE ENTIRE DRAWING / SPECIFICATION SET AND CAN COORDINATE ALL TRADES
2. **THE GENERAL CONTRACTOR IS REQUIRED TO FIELD VERIFY ALL CONDITIONS AND/OR DIMENSIONS PRIOR TO THE START OF CONSTRUCTION AND IDENTIFY ANY DISCREPANCIES TO THE ARCHITECT. GENERAL CONTRACTOR TO REVIEW ALL ABOVE CEILING CONDITIONS AS PART OF THE PROJECT SCOPE. RWPZOO REQUIRES CONTRACTOR TO PHOTO DOCUMENT ALL CONDITIONS INSIDE CEILINGS THAT MAY REQUIRE VERIFICATION IN FUTURE DATE.**
3. ALL WORK SHALL CONFORM TO ALL GOVERNING CODES AND ORDINANCES UNDER WHICH THEY ARE PERFORMED.
4. THE GENERAL CONTRACTOR IS RESPONSIBLE TO COORDINATE THE INSTALLATION OF ALL CEILING DIFFUSERS, EMERGENCY SIGNAGE AND LIGHTING, SPRINKLER HEADS, ACCESS PANELS, SURVEILLANCE CAMERAS, ETC. AND ANY LIGHTING NOT IDENTIFIED IN THESE DOCUMENTS OR LIGHTING SCHEDULE TO FULLY COMPLETE THE SCOPE OF WORK.
5. ALL GYP BOARD CEILING, SOFFITS, HEADERS, ETC. TO BE TAPED, JOINT COMPOUND APPLIED AND THEN SANDED TO A SMOOTH FINISH PRIOR TO APPLYING ANY FINAL FINISH. FINISH REQUIRED IS LEVEL 3 PER USG GYPSUM CONSTRUCTION HANDBOOK
6. THE CONTRACTOR SHALL COORDINATE AND VERIFY WITH THE OWNER ALL CAMERAS / VIDEO MONITORS / SURVEILLANCE / ANIMAL MONITORING EQUIPMENT PRIOR TO INSTALLATION OF POWER AND CABLE SUPPLIES. PROVIDE A SUPPORT FRAME SYSTEM WHICH SHALL BE SECURED TO THE STRUCTURE ABOVE.
7. **ALL LIGHTING FIXTURES ARE TO BE INSTALLED BY THE ELECTRICAL CONTRACTOR SEE ELECTRICAL ENGINEERING DWGS / INTERIOR / EXTERIOR ELEVATIONS FOR ADDITIONAL FIXTURES. (ALL FIXTURES WILL REQUIRE A SUBMITTAL AND APPROVAL BY ENGINEER / ARCHITECT PRIOR TO PROCUREMENT. (SEE GENERAL CONDITIONS G1.00)**
8. SEE ENGINEERING DRAWINGS FOR ADDITIONAL GENERAL NOTES AND COORDINATION REQUIREMENTS WITHIN CEILING PLANS
9. ALL EXPOSED MECHANICAL GRILLS, DIFFUSERS, ETC. ARE TO BE PAINTED TO MATCH ADJACENT AREAS. ARCH. DWGS GOVERN LOCATION
10. THE GENERAL CONTRACTOR SHALL COORDINATE AND VERIFY WITH OWNER THE LOCATIONS OF ANY MUSIC AND/OR PAGING SYSTEM CONTROL PANELS, SPEAKERS, ASSOCIATED EQUIPMENT, ETC. AND SHALL COORDINATE THE INSTALLATION ACCORDINGLY WITH THE ELECTRICAL CONTRACTOR.
11. THE ELECTRICAL CONTRACTOR SHALL COORDINATE WITH THE OWNER ALL LIGHTING TO BE CONTROLLED BY DIMMERS AND LOCATION OF DIMMER CONTROL PANEL.
12. THE GENERAL CONTRACTOR & ALL SUB-CONTRACTORS ARE RESPONSIBLE FOR COORDINATION OF ALL EQUIPMENT / SYSTEMS / ROUTES IDENTIFIED IN ENGINEERING DRAWINGS AND ARCHITECT'S DRAWINGS. GC TO BRING TO THE ATTENTION OF OWNER / ARCHITECT AND ENGINEERS ANY AND ALL CONFLICTS PRIOR TO FABRICATION AND OR INSTALL SO A SOLUTION TO AVOID CONFLICT MAYBE REVIEWED.
13. ALL CONCEALED IN-WALL BLOCKING SHALL BE FIRE TREATED.
14. THE GENERAL CONTRACTOR SHALL PROVIDE & COORDINATE WITH THE ELECTRICAL CONTRACTOR AND THE FIRE DEPARTMENT ALL LOCATIONS FOR EXIT SIGNS, EMERGENCY LIGHTING, FIRE EXTINGUISHERS, FIRE ALARM PULL STATIONS, HORN STROBES ETC. IF LOCAL AHJ REQUEST ADDITIONAL SCOPE BEYOND WHAT IS DEFINED IN PROJECT DOCUMENTS CONTRACTOR TO REVIEW WITH OWNER / ARCHITECT REQUEST MADE BY **RWPZOO** FACILITIES DEPARTMENT OR AHJ
15. SEE ENGINEERS DRAWINGS FOR NEW SPRINKLER SYSTEM TO BE COORDINATED AGAINST ARCHITECT CEILING PLAN. SPRINKLER INSTALLER TO FURNISH NECESSARY DRAWINGS AND TEST RESULTS REQUIRED BY LOCAL AUTHORITIES HAVING JURISDICTION / FILE FOR PERMIT. INCLUDING (IF REQUIRED) CONNECTION TO EXISTING SPRINKLER SYSTEM OR REUSE OF SPRINKLER MAINS WITH NEW HEAD LOCATION. REFER TO ENGINEERS DRAWINGS
16. OPEN
17. THE GENERAL CONTRACTOR SHALL COORDINATE WITH THE OWNER, ARCHITECT AND ELECTRICAL CONTRACTOR ALL PROPOSED BUILDING SIGNAGE AND ELECTRICAL REQUIREMENTS FOR EMERGENCY LIGHTING
18. THE ELECTRICAL CONTRACTOR SHALL COORDINATE WITH THE OWNER & ENGINEER AND ARCHITECT ALL LOCATIONS FOR RECEPTACLES, CABLE, DATA, LIGHTING, SWITCHES, POWER & TELEPHONE PRIOR TO THE START OF CONSTRUCTION, THAT ARE NOT INDICATED ON ENGINEERING DRAWINGS. ALL DEVICE LOCATIONS SHALL BE GOVERNED BY APPLICABLE CURRENT CODES AND ORDINANCES.
19. SEE ENGINEERING DRAWINGS FOR MECHANICAL DUCTWORK ROUTES MECHANICAL SUB CONTRACTOR / GC / ENGINEERS WILL REVIEW FINAL DUCT WORK LOCATIONS BASED ON PROPOSED STRUCTURE AND BUILDING CONDITIONS. NO PENETRATIONS NOT SHOWN ON DRAWINGS IN ROOF WILL BE MADE WITH-OUT APPROVAL OF OWNER / ARCHITECT.
20. GC WILL FURNISH ALL NECESSARY CONTROL AND EXPANSION JOINTS REQUIRED IN FIRE RATED CEILING ASSEMBLY (UL LISTED) IDENTIFIED BY USG GYPSUM CONSTRUCTION HANDBOOK AND ALL CURRENT APPLICABLE CODES.
21. IF A GYPSUM CEILING IS IDENTIFIED AS PART OF FIRE RATED (UL LISTED) ASSEMBLY. ALL PENETRATIONS AND ADHERENCES SHALL COMPLY WITH ALL RATINGS, TESTS AND UL/ATSM RATINGS TO MAINTAIN OVERALL FIRE RATED ASSEMBLY.
22. ALL M/E/P AND FIRE PROTECTION SYSTEMS THAT PENETRATE A FIRE RATED ASSEMBLY MUST PROVIDE NECESSARY DETAILS AND / OR ADDITIONAL EQUIPMENT TO MAINTAIN FIRE ASSEMBLY RATING PER LOCAL FIRE / BUILDING CODE AND NFPA 101 / ANSI / UL RATINGS
23. CONTRACTOR IS MADE AWARE THAT PROJECT HAS BEEN DOCUMENTED IN ACCORDANCE WITH AMERICAN ZOOLOGICAL ASSOCIATION (AZA) GUIDELINES FOR ANIMAL HABITAT, AS SUCH STRICT COMPLIANCE TO ALL MATERIAL SELECTIONS AND FABRICATION MUST BE MAINTAINED FOR THE SAFETY AND WELL BEING OF THE ANIMAL - NO SUBSTITUTES, WITHOUT PERMISSION IS ALLOWED.
24. ALL COLOR / STYLE / CONFIGURATION OF OUTLET FACES / RECEPTACLE AND SWITCH FACE PLATES WILL BE DEFINED IN DRAWINGS AND SPECIFICATIONS - IF NOTHING IS IDENTIFIED - GENERAL CONTRACTOR AND SUB-CONTRACTORS TO SUBMIT STANDARD COLOR OPTIONS FOR APPROVAL BY OWNER AND ARCHITECT PRIOR TO PURCHASE AND INSTALL
25. GC / ELECTRICAL SUB CONTRACTOR TO REVIEW ALL EQUIPMENT DRAWINGS AND SPECIFICATIONS TO COORDINATE NEEDED SERVICES FOR ALL ZOO EQUIPMENT IN RELATIONSHIP TO OVERALL ELECTRICAL SERVICE.
26. **PROJECT HAS PROVIDED M/E/P/ FIRE PROTECTION ENGINEERING DRAWINGS AS PART OF INSTRUMENTS OF SERVICE AND FABRICATION DOCUMENTS. GENERAL CONTRACTOR AND ALL SUB-CONTRACTORS WILL BE RESPONSIBLE FOR REVIEWING AND FAMILIARIZING THEMSELVES WITH ALL DOCUMENTS. IF CHANGE OF SERVICE AND/ OR ADDITIONAL SERVICES, SCOPE AND OR COST IS INCURRED BECAUSE OF FAILURE TO FAMILIARIZE ONESELF WITH DRAWINGS AND SPECIFICATIONS PROJECT WILL NOT BE RESPONSIBLE FOR SCOPE/SERVICE/SCHEDULE OR COST WITHOUT REVIEW AND WRITTEN APPROVAL BY OWNER / ARCHITECT.**

© 2022 LDL STUDIO INC.

ARCHITECT OF RECORD:
LDL STUDIO
ARCHITECT / HOSPITALITY DESIGNER
LDL STUDIO, INC.
106 Putnam Street
Providence, RI 02909
P: 401.274.4516
F. 401.421.2631
www.ldlstudio.com
Architect of Record: Gary M. Lepore, AIA

CERTIFICATION:

CONSULTANTS:
M/E/P & FP ENGINEER:
HP ENGINEERING CONSULTING ENGINEERS, P.C.
15 MAIDEN LANE
NORTH HAVEN, CT
P: 203-239-9425
JOHN PHILLIPS, P.E.

STRUCTURAL ENGINEER:
AMR ENGINEERING INC.
82 SCENIC DRIVE
WEST WARWICK , RI 02893
P: 401.559.3659
ANTHONY ROTONDO, P.E.

OWNER:
ROGER WILLIAMS PARK ZOO
RHODE ISLAND ZOOLOGICAL ASSOC. FOR THE ROGER WILLIAMS PARK ZOO
1000 ELMWOOD AVENUE
PROVIDENCE
RHODE ISLAND 02907

NUMBER	DATE	DESCRIPTION

REVISIONS:

PROJECT NAME:
RED PANDA EXHIBIT
RWPZ
1000 ELMWOOD AVENUE
PROVIDENCE
RHODE ISLAND 02907

SUBMISSION TYPE:
PERMIT SET

PROJECT TYPE:
NEW CONSTRUCTION

CLIENT NUMBER:
RWPZ 2022_01

ISSUE DATE: NOVEMBER 14, 2022

SHEET NAME:
PROPOSED REFLECTED CEILING PLAN

DRAWING SCALE:

PROJECT NUMBER:
2022-03

DATE ISSUED:
11/14/2022

A4.00

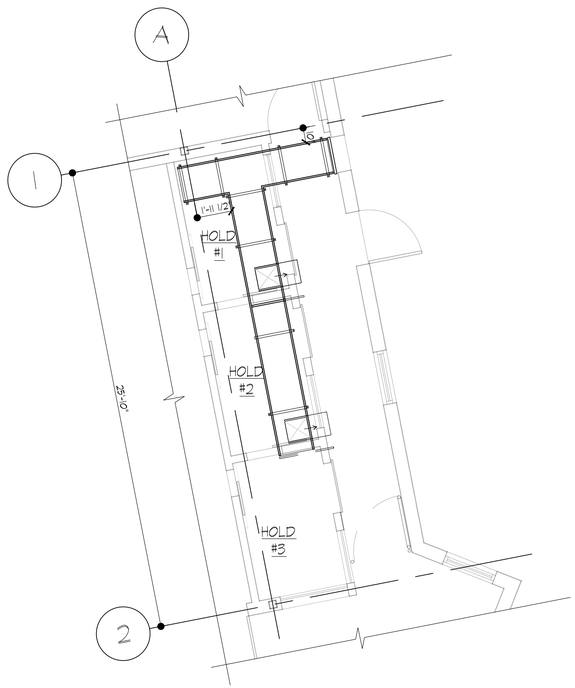

1 A5.00 ANIMAL TRANSFER TUBE LOCATION
SCALE: 1/4"= 1'-0"

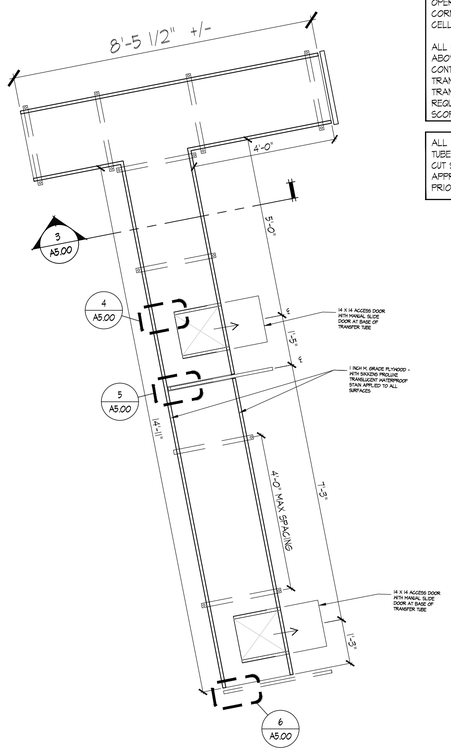

2 A5.00 ENLARGED PLAN @ ANIMAL TRANSFER TUBE
SCALE: 1/2"= 1'-0"

NOTES:

ANIMAL SLIDING DOORS / INTERIOR HOLDING CAGES / CHAIN LINK AND TRANSFER TUBE TO BE INSTALLED BY CORNERS LIMITED. GC TO COORDINATE WITH VENDER LISTED BELOW FOR ADDITIONAL REQUIREMENT.

JEFF SMITH
OPERATIONS MANAGER
CORNERS LIMITED
CELL: 269-207-0088

ALL CONTRACTORS ARE HEREBY NOTIFIED THAT THE ABOVE CONTRACTOR IS THE RWPZOO PREFERRED CONTRACTOR FOR INSTILLATION OF ALL ANIMAL TRANSFER DOORS / CHAIN LINK / CAGE AND ANIMAL TRANSFER TUBE - ALL BIDDING CONTRACTORS ARE REQUIRED TO CARRY THIS CONTRACTOR IN ALL BIDS AND SCOPE OF WORK -

ALL ANIMAL SLIDING DOORS AND TRANSFER TUBE REQUIRES SUBMITTAL OF SPECIFICATIONS/ CUT SHEET AND SHOP DRAWINGS TO BE APPROVED BY RWPZOO ANIMAL CARE STAFF PRIOR FABRICATION.

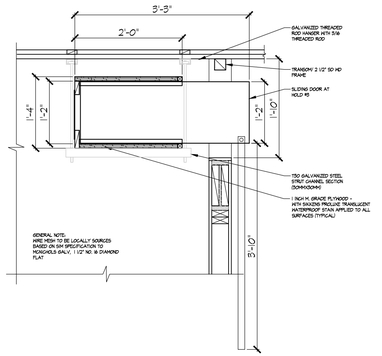

5 A5.00 ENLARGED SECTION @ SLIDING DOOR
SCALE: 3/4"= 1'-0"

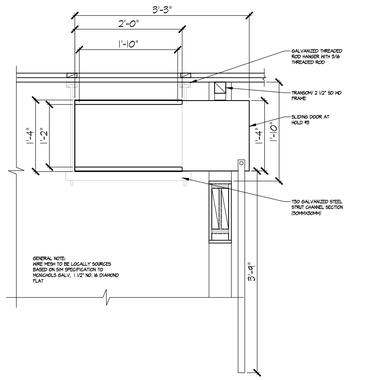

6 A5.00 ENLARGED SECTION @ SLIDING DOOR (HOLD #3)
SCALE: 3/4"= 1'-0"

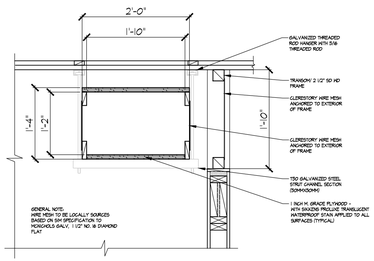

3 A5.00 ENLARGED SECTION @ ANIMAL TUBE
SCALE: 3/4"= 1'-0"

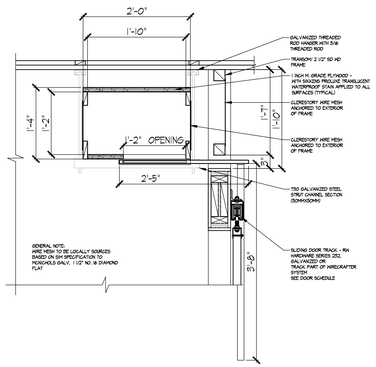

4 A5.00 ENLARGED SECTION @ SLIDING DOOR (HOLD #1 & 2)
SCALE: 3/4"= 1'-0"

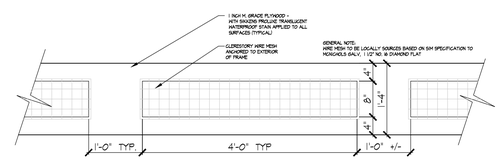

7 A5.00 ENLARGED ELEVATION @ ANIMAL TRANSFER TUBE
SCALE: 3/4"= 1'-0"

ARCHITECT OF RECORD:
LDL STUDIO
ARCHITECT / HOSPITALITY DESIGNER
LDL STUDIO, INC.
106 Putnam Street
Providence, RI 02909
P: 401.274.4516
F. 401.421.2631
www.ldlstudio.com
Architect of Record: Gary M. Lepore, AIA

SEAL/SIGNATURE:
GARY M. LEPORE
No. 7750
REGISTERED ARCHITECT

M/E/P & FP ENGINEER:
HP ENGINEERING CONSULTING ENGINEERS, P.C.
15 MAIDEN LANE
NORTH HAVEN, CT
P: 203-239-9425
JOHN PHILLIPS, P.E.

STRUCTURAL ENGINEER:
AMR ENGINEERING INC.
82 SCENIC DRIVE
WEST WARWICK, RI 02893
P: 401.559.3659
ANTHONY ROTONDO, P.E.

OWNER:
ROGER WILLIAMS PARK ZOO
RHODE ISLAND ZOOLOGICAL ASSOC. FOR THE ROGER WILLIAMS PARK ZOO
1000 ELMWOOD AVENUE
PROVIDENCE
RHODE ISLAND 02907

NUMBER	DATE	DESCRIPTION

REVISIONS:

PROJECT NAME:
RED PANDA EXHIBIT
RWPZ
1000 ELMWOOD AVENUE
PROVIDENCE
RHODE ISLAND 02907

SUBMISSION TYPE:
PERMIT SET

PROJECT TYPE:
NEW CONSTRUCTION

PROJECT NUMBER:
RWPZ 2022_01

ISSUE DATE: NOVEMBER 14, 2022

SHEET NAME:
ANIMAL TRANSFER TUBE DETAILS

DRAWING SCALE:

PROJECT NUMBER:
2022-03

DATE ISSUED:
1/14/2022

SHEET NUMBER:
A5.00

© 2022 LDL STUDIO INC.

IF THIS SHEET IS NOT 24 X 36 IT IS A REDUCED SCALE PRINT - SCALE ACCORDINGLY
WWW.LDLSTUDIO.COM LDL STUDIO INC. - CELEBRATING 27 YEARS OF AWARD WINNING SERVICE 1995 - 2022 ARCHITECTS AIA 2030 CHALLENGE ADOPTER

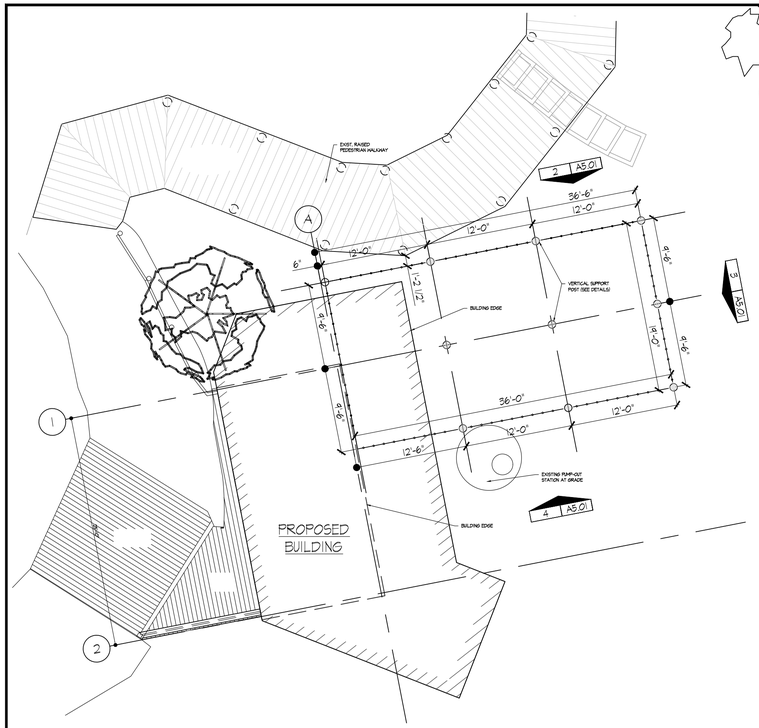

1 A5.01 PROPOSED SITE PLAN
SCALE: 1/8"= 1'-0"

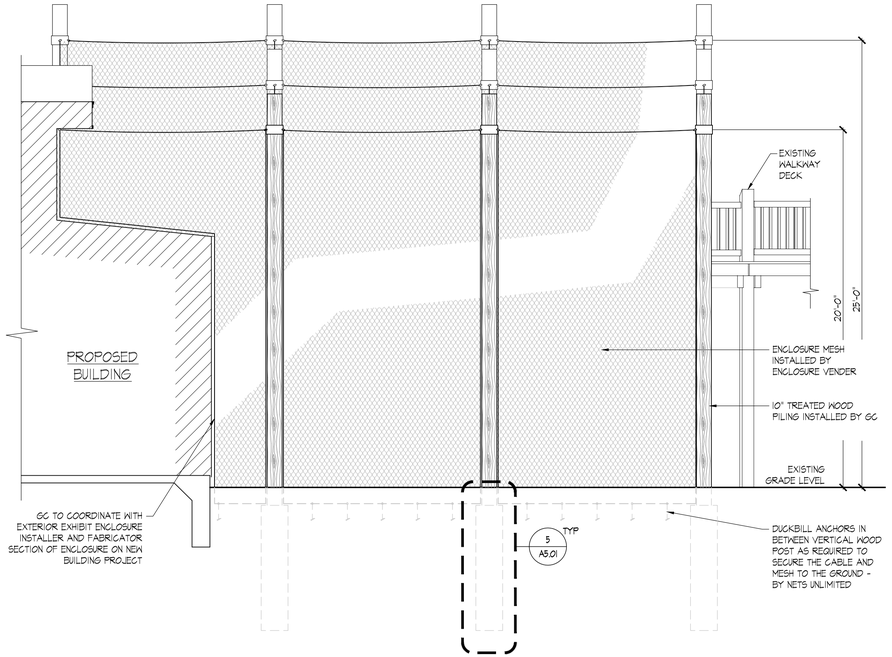

2 A5.01 ELEVATION @ EXTERIOR ENCLOSURE EXHIBIT
SCALE: 1/4"= 1'-0"

NOTE:

PROPOSED NEW EXTERIOR EXHIBIT ENCLOSURE. GC TO COORDINATE WITH ENCLOSURE VENDER LISTED BELOW AS REQUIRED WITH OWNERS ENCLOSURE CONSULTANT ANY AND ALL BUILDING/ SITE COORDINATION INCLUDING BUT NOT LIMITED TO IN-WALL BLOCKING AT NEW BUILDING FOR THE INSTALLATION OF EXTERIOR ENCLOSURE SURROUND AT NEW RED PANDA OUTDOOR EXHIBIT.

NETS UNLIMITED Nets Unlimited
20625 NORTH 28TH PLACE
PHOENIX, ARIZONA 85050
480-515-1300
INFO@NETSUNLIMITED.COM
CONTACT: VERONICA

ALL CONTRACTORS ARE HEREBY NOTIFIED THAT THE ABOVE CONTRACTOR IS THE RWPZOO PREFERRED CONTRACTOR FOR INSTILLATION OF ALL EXTERIOR EXHIBIT ENCLOSURE - ALL BIDDING CONTRACTORS ARE REQUIRED TO CARRY THIS CONTRACTOR IN ALL BIDS AND SCOPE OF WORK -

EXTERIOR ENCLOSURE SPECIFICATION / FABRICATION DETAILS REQUIRES SUBMITTAL OF SPECIFICATIONS/ CUT SHEETS AND SHOP DRAWINGS TO BE APPROVED BY RWPZOO ANIMAL CARE STAFF PRIOR FABRICATION.

NETS UNLIMITED



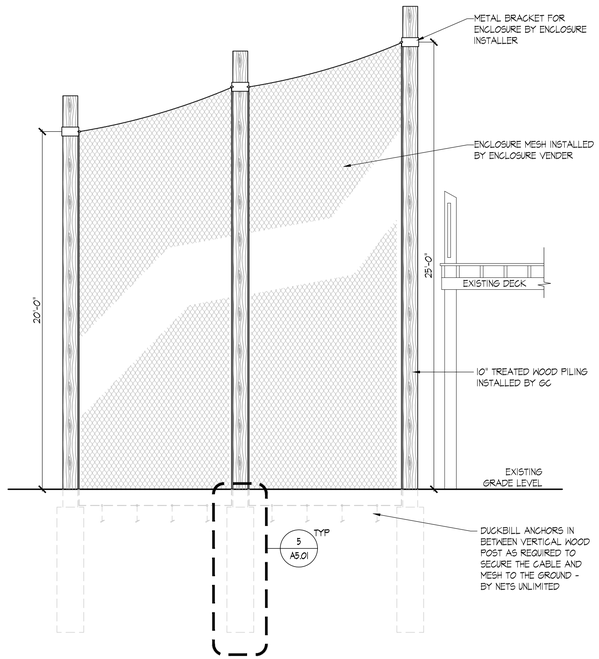

3 A5.01 ELEVATION @ EXTERIOR ENCLOSURE EXHIBIT
SCALE: 1/4"= 1'-0"

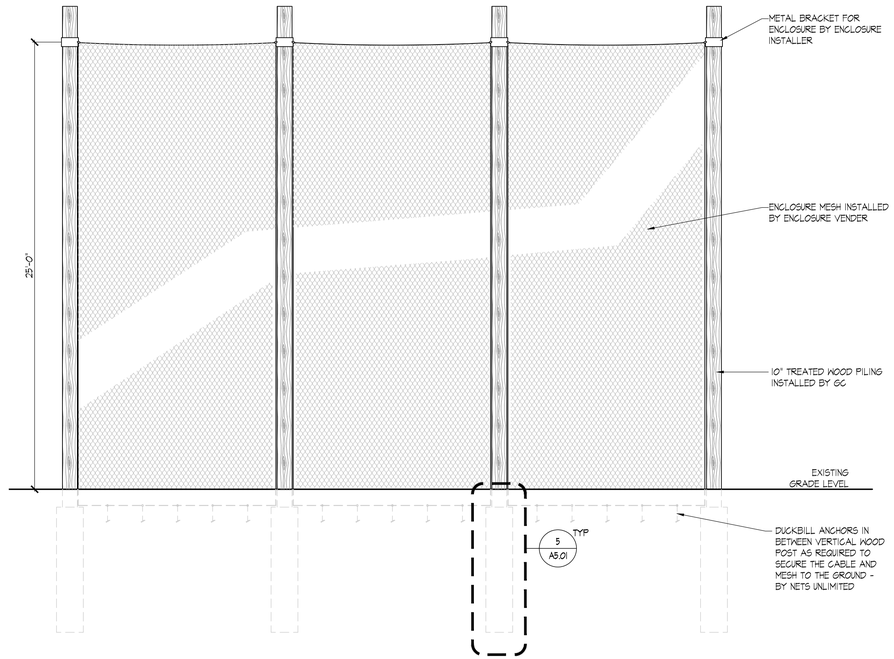

4 A5.01 ELEVATION @ EXTERIOR ENCLOSURE EXHIBIT
SCALE: 1/4"= 1'-0"

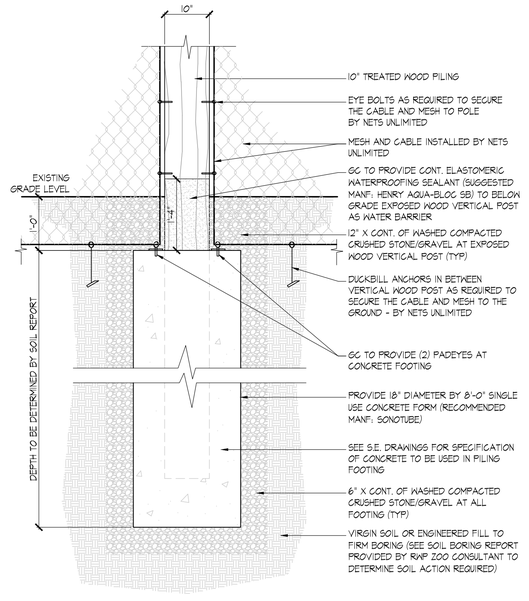

5 A5.01 DETAIL @ PILING FOOTING (TYP)
SCALE: 3/4"= 1'-0"

ARCHITECT OF RECORD
LDL STUDIO
ARCHITECT / HOSPITALITY DESIGNER
LDL STUDIO, INC.
106 Putnam Street
Providence, RI 02909
P: 401.274.4516
F: 401.421.2631
www.ldlstudio.com
Architect of Record: Gary M. Lepore, AIA

SEAL / SIGNATURE



M/E/P & FP ENGINEER:
HP ENGINEERING CONSULTING ENGINEERS, P.C.
15 MAIDEN LANE
NORTH HAVEN, CT
P: 203-239-9425
JOHN PHILLIPS, P.E.

STRUCTURAL ENGINEER:
AMP ENGINEERING INC.
82 SCENIC DRIVE
WEST WARWICK, RI 02893
P: 401.559.3659
ANTHONY ROTONDO, P.E.

OWNER
ROGER WILLIAMS PARK ZOO
RHODE ISLAND ZOOLOGICAL ASSOC. FOR THE ROGER WILLIAMS PARK ZOO
1000 ELMWOOD AVENUE
PROVIDENCE
RHODE ISLAND 02907

NUMBER	DATE	DESCRIPTION

REVISIONS

PROJECT NAME
RED PANDA EXHIBIT
RWPZ
1000 ELMWOOD AVENUE
PROVIDENCE
RHODE ISLAND 02907

SUBMISSION TYPE
PERMIT SET

PROJECT TYPE
NEW CONSTRUCTION

PROJECT NUMBER
RWPZ 2022_01

ISSUE DATE: NOVEMBER 14, 2022

SHEET NAME
EXTERIOR ENCLOSER EXHIBIT PLAN AND ELEVATIONS

DRAWING SCALE

PROJECT NO.	2022-03
DATE	11/14/2022

SHEET NO. A5.01

© 2022 LDL STUDIO INC.

IF THIS SHEET IS NOT 24 X 36 IT IS A REDUCED SCALE PRINT. SCALE ACCORDINGLY
WWW.LDLSTUDIO.COM LDL STUDIO INC. - CELEBRATING 27 YEARS OF AWARD WINNING SERVICE 1995 - 2022 ARCHITECTS AIA 2030 CHALLENGE ADOPTER

IF THIS SHEET IS NOT 24 X 36 IT IS A REDUCED SCALE PRINT - SCALE ACCORDINGLY

ARCHITECTS AIA 2030 CHALLENGE ADOPTER
LDL STUDIO INC. - CELEBRATING 27 YEARS OF AWARD WINNING SERVICE 1995 - 2022
WWW.LDLSTUDIO.COM

DOOR SCHEDULE

GENERAL CONTRACTOR WILL VERIFY ALL WINDOWS AND DOOR OPENINGS AND REQUIREMENTS WITH ARCHITECT AND OWNER PRIOR TO PURCHASE.

ITEM #	OPENING SIZE	DOOR HT.	DOOR TYPE	THK	CONST.	FINISH	GL TYPE	FRAME TYPE / DTL	FIRE RATNG	HARDWARE SET	REMARKS	MANUFACTURER	MANUF. #
D-01	6'-0"	7'-0"	V/F	1-3/4"	PFCM	MF	WFG	#5/ #6	--	# 1	DBL DOOR / INACTIVE # 20 / #22 / #29 / #32	CECO DOOR	18 GA / LEGION FLUSH
D-02	6'-0"	7'-0"	V/F	1-3/4"	HCMH	MP	WFG	#5/ #6	--	# 2	SEE NOTES #4 / # 5 BELOW AND #13	CECO DOOR	18 GA / REGENT FLUSH
D-03	3'-0"	7'-0"	V	1-3/4"	PFCM	MP	WFG		-	# 3	#20 AND SEE NOTE # 4 BELOW / EXTR BLACK	CECO DOOR	18 GA / LEGION FLUSH
D-04	3'-0"	7'-0"	F	1-3/4"	HCMH	MF	--	#5/ #6	-	# 4	# 13	CECO DOOR	18 GA / REGENT FLUSH
D-05	3'-0"	6'-8"	G	1"	SEE SPEC	SEE SPEC	--	SEE SPEC	-	SEE SPEC	STL LOCKABLE SLIDING GATE DR WITH TRACK	REFER TO NOTE #8: DOORS TO BE FURNISHED AND INSTALLED BY CORNERS LIMITED. CONTACT : JEFF SMITH, OPERATION MANAGER 269-207-0088	
D-06	3'-0"	6'-8"	G	1"	SEE SPEC	SEE SPEC	--	SEE SPEC	-	SEE SPEC	STL LOCKABLE SLIDING GATE DR WITH TRACK		
D-07	3'-0"	6'-8"	G	1"	SEE SPEC	SEE SPEC	--	SEE SPEC	-	SEE SPEC	STL LOCKABLE SLIDING GATE DR WITH TRACK		
D-08	3'-0"	6'-8"	G	1"	SEE SPEC	SEE SPEC	--	SEE SPEC	-	SEE SPEC	CHAINLINK SWING GATE		

SCHEDULE NOTE:

1) GC TO SUBMIT MANF./STYLE SPECIFICATIONS ON DOORS SELECTED TO MEET PERFORMANCE INDICATED FOR REVIEW AND APPROVAL BY ARCHITECT PRIOR TO PURCHASE.

2) GC TO SUBMIT SHOP DRAWINGS AND CUTS FOR FINAL APPROVAL ON ALL HARDWARE SPECIFIED AND FINISH / MATERIAL SELECTION FROM STANDARD AVAILABLE SELECT

3) GENERAL REMARKS AND NOTES - # 1, # 11, # 14, # 15, # 16, #17 AND # 18 APPLY TO ALL DOORS IN SCHEDULE .

4) DOORS INDICATED TO HAVE SECURITY TIE AND LOCK CORE MUST BE REVIEWED BY RWPZOO FOR COORDINATION TO RWPZOO KEY STANDARDS AND SECURITY GUIDELINES WITH ZOO, AND G.C. TO REVIEW IF FRAME REQUIRES MODIFICATION & COORDINATION W/ ELEC

5) ARCHITECTS RECOMMENDS MANUFACTURER NOTED ABOVE - HOWEVER, IF **RWPZ** HAS STANDARD MANF. PLEASE FOLLOW CLIENT STANDARDS. CLIENT APPROVAL REQUIRED.

8) ALL CHAINLINK DOOR, ANIMAL SLIDING DOOR & ANIMAL TRANSFER TUBE DOORS TO BE COVERED BY CORNERS LIMITED. GC TO COORDINATE WITH DOOR VENDER FOR ANY REQUIREMENT BEFORE INSTALLATION.

CONTACT:
JEFF SMITH
OPERATION MANAGER
269-207-20088

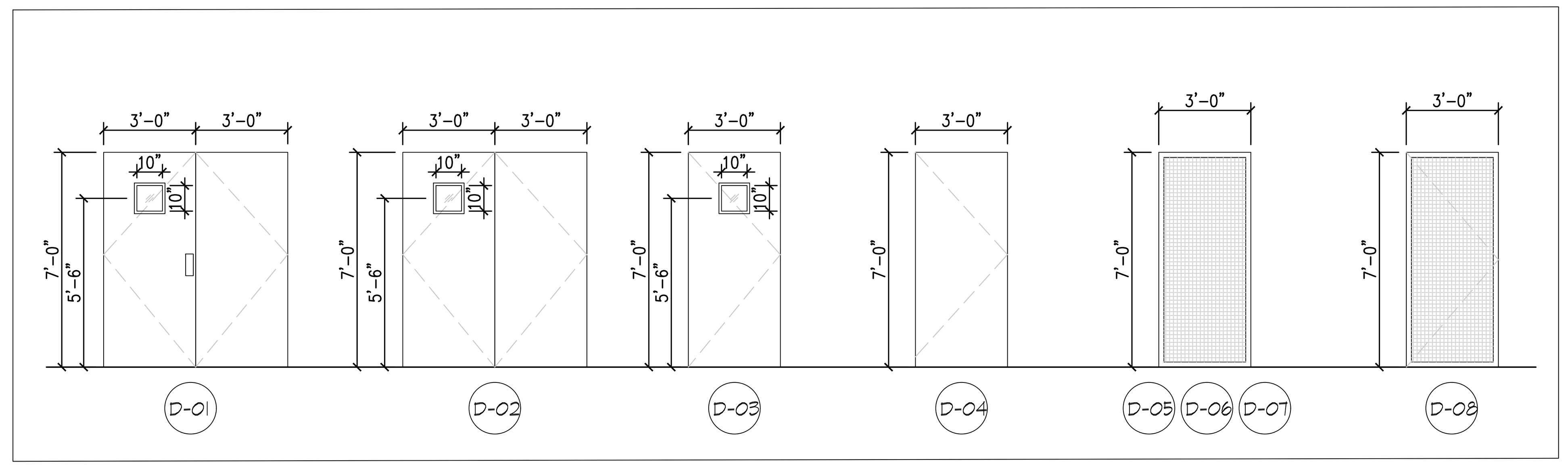

HARDWARE SET:

PREFERED HARDWARE - SCHLAGE - ALX SERIES
STYLE: GRADE 2 LEVER - LAT FINISH: 622 BLK

SEE DOOR SCHEUDLE FOR HARDWARE SET SPECIFIED FOR SPECIFIC DOOR
ALL HARDWARE SPECIFICATION / COLOR / STYLE / TECH DATA MUST BE SUBMITTED AS PART OF THE DOOR SUBMITTAL FOR APPROVAL BE ARCHITECT PRIOR TO ORDER

SET # 1	SET # 2	SET # 3
6 @ HINGE SET ENTRANCE SET 1@ DEADBOLT INACTIVE DOOR DOOR CLOSER O.H. STOP BOTH DOORS WEATHER STRIP GASKET	6 @ HINGE SET ENTRANCE SET INACTIVE DOOR FOOT STOP BOTH DOOR (OUTSIDE) SOUND GASKET	3 @ HINGE SET ENTRANCE SET DOOR CLOSER WEATHER STRIP GASKET O.H. STOP

SET # 4		SET # - ES
3 @ HINGE SET STOREROOM SET DOOR CLOSER SOUND GASKET O.H. STOP		IF A HARDWARE SET NUMBER IS FOLLOWED BY - ES THIS SET REQUIRES ELECTRONIC CONNECTIONS TO EITHER A FIRE ALARM OR SECURITY SYSTEM

GENERAL NOTE - LOCKSETS SHOWN FOR INTENT - RWPZOO MAY REQUIRE STANDARD LOCK / BOLT OR ELECTRONCI / SMART LOCK SYSTEM. SEE RWP ZOO FOR PARK STANDARD AND GUIDELINES FOR LOCK SETS

HINGE SET : STANLEY STANDARD WEIGHT FULL MORTISE 5 KNUCKLE HINGE
__X__ FBB179 (ANSI A8112) STEEL - POLISHED /PLATED OR PHOSPHATED % PRIME COATED FOR PAINTING
_____ FBB191 (ANSI A2112) ____ BRASS OR ____ BRONZE: POLISHED AND PLATED ___ HINGE FINISH TO MATCH LEVER
SPECIAL HINGE TYPE ___ 180D FULL CLEAR SWING MORTISE HINGE
___ NON-REMOVABLE PINS ___ SHEAR RESISTANT STUD
___ SECURITY STUD ___ CONT. HVY DUTY GEARED FULL HIEGHT
___ SECURITY/ ELECTRIFICATION OPTION ___ CNTR HUNG PIVOT MODEL
___ TOP / BOTTOM HVY DTY PIVOT MODEL ___ OFFSET PIVOT MODEL

DOOR CLOSER
_____ SARGENT 1431 SERIES POWERGLIDE (ANSI/BHMA GRADE 1 (A156.4)
_____ SARGENT 351 SERIES POWERGLIDE (HVY DTY - HIGH TRAFFIC)
_____ PARALLEL ARM APPLICATION _____ HVY DTY PARALLEL ARMS
_____ P10 HVY DTY PARALLEL ARM
_____ PS - HVY DTY PARALLEL ARM W/ POSITIVE STOP
_____ CPS - HVY DTY PARALLEL ARM W/ COMPRESSION STOP
_____ FINISH FINISH TO MATCH LEVER
SPECIAL CLOSER
_____ SARGENT 590 SERIES CLOSER / SURFACE MOUNTED
___ H - HOLDER ___ S - STOP HVY DUTY OVRHD CLOSER
_____ SARGENT 269 SERIES POWERGLIDE
TRACK / STEEL ARM VISIBLE - DOOR IS OPEN
_____ SARGENT 2409 SERIES HOLDER - CLOSER
ELECTROMECHANICAL FIRE GUARD / SMOKE DETECTOR
_____ SARGENT 1560 SERIES WALL MNTED HOLDER - SELF-CLOSER
ELECTROMAGNETIC DOOR HOLDER / FAIL-SAFE DEVICE

METAL FRAMES
_____ STEELCRAFT CO. F16 & F14 SERIES FLUSH FRAMES 16 GAGE
HVY DUTY / EXTRA HVY DUTY APPLICATION (ANSI A250.8 -1998)
FIRE RTD: ASTM E152 / UL-10B POS PRESSURE : UBC 7-2 /UL-10C
____ CORNER CONNECTIONS: SUA (SET-UP WELDED) ANSI A250.8-1998
____ CORNER CONNECTIONS: KD (KNOCK-DOWN) ANSI A250.8-1998
____ DW16- SERIES EASY SET DRYWALL FRAMES (16 GAGE)
POS PRESSURE (ASTM E152 & UL-10B) F. RATED UBC 7-2 & UL-10C
____ SECURITY / ELECTRIFICATION OPTION

_X_ IF THIS BOX IS CHECKED -SEE PROJECT SPECIFICATIONS / SCHEDULE FOR SPECIFIC TYPE OF HARDWARE / PULL / PUSH / LEVER / HINGE OR OTHER DEVICE IDENTIFIED FOR THIS PROJECT. SUPPLIER / GC TO PROVIDE CUT SHEET / TECH. DATA AND FINISH SAMPLE FOR APPROVAL BY ARCHITECT PRIOR TO ORDER

OVERHEAD STOPS: GLYNN-JOHNSON
___ 450 SERIES SURFACE OVRHD DR STOPS
MED DUTY . FINISH FINISH TO MATCH LEVER

MAGNETIC DOOR HOLDERS
ARCH. BUILDERS HARDWARE MFG.
____ 2100 REC. WALL MOUNT
____ 2300 SURFACE WALL MOUNT
____ 2400 FLUSH WALL MOUNTED
____ 2400L FLUSH WALL MOUNTED

THRESHOLD: HAGER CO.
___ 410S FINISH______________
___ 412S FINISH______________
___ 413S FINISH______________

DOOR BOTTOM SWEEPS: PEMKO
___ 315DN FINISH______________
___ 18062WNB FINISH______________

PERIMETER GASKETING: PEMKO
___ 303DV FINISH________
WEATHERIZATION
___ SILICONSEAL S88____
___ PEMKOPRENE PK55________
___ SPRING BRONZE

PUSH AND PULL BARS / BAR & PLATE AND PLATES
_____ IVES ARCHITECTURAL PULLS AND PUSH BARS
___ 8103EZHD SOLID PULL BAR 1" DIA
SIZES __ 8 INCH __ 10 INCH __ 12 INCH
COMPLY ADA & BARRIER FREE APPLCTN
___ 9100HD SOLID PUSH BAR 1" DIA
SIZES __ 28 INCH __ 33 INCH __ OTHER INCH
___ 9103EZHD SOLID 90D PULL/PUSH BAR COMB 1 INCH DIA
___ 8200 PUSH PLATE - .05 THICKNESS
SIZES __ 3 X 12 INCH __ 4 X 16 INCH
___ 8303 PULL PLATE - 1" DIA / .05 THICKNESS
SIZES __ 3 1/2 X 15 INCH __ 4 X 16 INCH
___ 9264 OFFSET LONG DR PULL - 1" DIA
SIZES __ 72 INCH __ 36 INCH __ OTHER INCH
__ ROUND TOP __ FLAT TOP
_____ FINISH ___ SATIN NICKEL ___ ST/ST
_____ HEAVY DUTY MOUNTING HARDWARE REQ.
_____ FINISH FINISH TO MATCH LEVER

EXIT DEVICE: VON DUPRIN
___ 22-F RIM FIRE EXIT DEVICE FINISH: ____ SP28 SPRAYED ALUM. ____ SP313 DARK BRONZE
___ 22EO-F (EXIT ONLY-TRIM) ___ 230TP-BE** THUMB-PIECE PULL / BLANK PLATE ___ 22L-F LEVER KEY / LOCKSET
___ 230NL (KEY RETRACT LATCHBOLT) W/ PULL PLATE ___ 22NL-OP-F (KEY RETRACT LATCHBOLT) / PULL REQ.

POCKET DOOR FRAMES / ASSEMBLY KITS:
_____ JOHNSTON HARDWARE SOFT-CLOSE POCKET DOOR KIT
____ COMMERCIAL GRADE - 200LBS MAX DOOR WEIGHT ____ HEAVY DUTY POCKET KIT - 400 LBS MAX DOOR WEIGHT
PROVIDE WITH SOFT-CLOSE KIT / TOP HUNG ONLY
____ # 1500SC (2 INCH X 4 INCH WALL) -- 20" MIN. DOOR WIDTH FOR SOFT CLOSE & SOFT OPEN KIT
____ # 152468SC (1-28 X 80 INCH DR) ___ # 152668SC (1-30 X 80 INCH DR) ___ # 152868SC (1-32 X 80 INCH DR)
____ # 153068SC (1-36 X 80 INCH DR)
____ # 1560 (2 INCH X 6 INCH WALL)
____ # 15603068 (36 INCH DOOR) ___ # 15602668 (MAX 30 INCH DOOR)
____ CONVERGING DOORS REQ. TWO FRAMES & #1555 KIT
____ SPCL FRAME FOR 60 INCH W X 108 INCH H DOOR
____ PRIVACY LOCK # 1534 ____ 1 3/8 INCH DIA PULL # 21 ____ 1-3/4 INCH DIA PULL # 134 ____ PULL CLENCH #30
____ DOOR EDGE PULL # 150 ____ 1 - 3/8 INCH X 3 INCH RECTANGULAR PULL # 35 ____ HIDDEN GUIDE SET # 2041
____ PULL TO BE SPECIAL - SEE DOOR SCHEUDLE ____ PULL FINISH TO BE FINISH TO MATCH LEVER

_X_ IF THIS BOX IS CHECKED -SEE PROJECT SPECIFICATIONS / SCHEDULE FOR TYPE OF POCKET DOOR FRAMES AND ASSEMBLY

WALL MOUNTED SLIDING DOOR HARDWARE
_____ JOHNSTON HARDWARE SOFT-CLOSE WALL MOUNT SLIDING DOOR KIT
____ COMMERCIAL GRADE - 200LBS MAX DOOR WEIGHT # 2610F
____ COMMERCIAL GRADE - 400LBS MAX DOOR WEIGHT # 200WF
___ 1 DOOR HARDWARE SET ___ 2 DOOR HARDWARE SET
___ CONVERGING HARDWARE SET
___ CLEAR ANODIZED ___ BRONZE ANODIZED
___ BALL BEARING WHEELS ___ TRACK END CAP
___ WOOD FASCIA BRACKET SET ___ MATCH DOOR HARDWARE FINISH
___ FLOOR MOUNTED GUIDE POST ___ WALL MOUNTED DOOR GUIDE
___ 2020 DOOR HANGER (400 LBS MAX) ___ TRACK STOP

___ 24 INCH DOOR / 48 INCH TRACK
___ 30 INCH DOOR / 60 INCH TRACK
___ 36 INCH DOOR / 72 INCH TRACK
___ 48INCH DOOR / 96 INCH TRACK
___ 24 INCH DOOR / 96 INCH TRACK 2 DOORS
___ 30 INCH DOOR / 120 INCH TRACK 2 DOORS
___ 36 INCH DOOR / 144 INCH TRACK 2 DOORS
___ 48 INCH DOOR / 192 INCH TRACK 2 DOORS

___ IF THIS BOX IS CHECKED -SEE PROJECT SPECIFICATIONS / SCHEDULE FOR TYPE OF SLIDING DOOR HARDWARE / ASSEMBLY

HARDWARE SCHEDULE & LEGEND
SCALE: N.T.S

DOOR CONSTRUCTION

HC	HOLLOW CORE WOOD
HCH	HOLLOW-CORE DOOR WITH HARDBOARD
HCT	HOLLOW-CORE DOOR WITH TEXTURED FACES
HCPL	HOLLOW-CORE DOOR WITH PLASTIC LAMINATE
HCMH	HONEYCOMB FIBER CORE METAL DOOR
PFCM	INSULATED POLY FOAM-CORE METAL DOOR
AG	PARTICLEBOARD CORE- 5 PLY CONSTRN
SC	SOLID CORE WOOD
FC	FIRE CORE PLASTIC / WOOD / PARTICLE CORE
PC	PARTICLEBOARD CORE (TYPE II)
MCWV	FIRE RESISTANT MINERAL-CORE- WD VENEER
SCH	SOLID-CORE DOOR W/ HARDBOARD
SCPL	SOLID-CORE DOOR W/ PLASTIC LAMINATE
SCMO	SOLID-CORE DOOR W/ MEDIUM DENSITY OVRLY
SCW	SOLID-CORE DOOR W/ WOOD-VENEER FACES
SRW	STILE AND RAIL DOOR
FRP	FIBERGLASS REINFORCED POLYESTER DOOR
ACOUS	ACOUSTICAL CORE WOOD
AC	ALUMINUM CLAD WOOD
AL	ALUMINUM
HM	HOLLOW METAL
S	STEEL DOOR
SS	STAINLESS STEEL DOOR
LSG	WOOD-FRAMED GLASS DOOR
AFG	ALUMINUM-FRAMED GLASS DOOR
SOHF	SOFT CORE - MOLDED HARDBOARD FACE
SCRECY	SOLID CORE - <75% POST INDUSTRL RECYCLD

GLASS TYPE

--	NO GLASS REQUIRED
CIG	CLEAR INSULATING GLASS
FRG	FIRE RATED GLAZING
WFG	LAMINATED SAFETY GLASS
AFG	PATTERNED GLASS
PW	PATTERNED WIRE GLASS
PWG	POLISHED 1/4" WIRE GLASS
TPG	TEMPERED PATTERNED GLASS
IG	1" INSULATING SECURITY GLASS
UCFT	UNCOATED CLEAR FULLY TEMPERED FLOAT GLASS
TF	1/4" UNCOATED CLEAR FULLY TEMPERED FLOAT
UTFT	UNCOATED TINTED FULLY TEMPERED FLOAT GLASS
LGS	LAMINATED GLASS - SANDBLASTED; 20% OPACITY
AEG	ACID ETCHED GLASS; COATED / 100% FULL FROST

FRAME MATERIAL

ACW	ALUMINUM CLAD WOOD
AL	ALUMINUM
PS	PRESSED STEEL
SS	STAINLESS STEEL
WD	WOOD
HM	HOLLOW METAL

DOOR FACING AND FINISH

AF	ALUMINUM FACTORY FINISH
CL	HARDWOOD WITH TRANSPARENT FINISH
WFF	WOOD FACTORY FINISH
MF	METAL FACTORY FINISH
MP	METAL FIELD PAINTED
WS	WOOD FIELD STAINED
WP	WOOD FIELD PAINTED
WF	WOOD FACTORY PRIME ONLY
OP	OPAQUE WITH FLAT GLOSS TOPCOAT
LF	LAMINATED FACTORY FINISH
FP	HARDBOARD- FACTORY PAINTED FINISH
MTCH	MATCH EXISTING

FIRE RATINGS

A180	3 HOUR RATING "A" LABEL
B90	1 1/2 HOUR RATING "B" LABEL
B60	1 HOUR RATING "B" LABEL
C45	3/4 HOUR RATING "C" LABEL
20	1/3 HOUR RATING
--	NO FIRE RATING REQUIRED

ALL DOORS WILL REQUIRE SUBMISSION OF CUT SHEETS COLOR SAMPLE AND SHOP DRAWINGS FOR APPROVAL PRIOR TO PLACING ORDER

GENERAL NOTES / REMARKS:

1. ALL DOORS ARE 1 3/4" THICK UNLESS OTHERWISE NOTED.
2. PROVIDE A 3/4" UNDERCUT ON THE FOLLOWING DOORS: TOILETS, M/E/P ROOMS,
3. REFER TO DRAWING **A8.00** FOR DOOR AND FRAME TYPES.
4. REFER TO FLOOR PLAN DRAWINGS FOR LOCATION OF DOORS.
5. DOOR NUMBERING INDICATED BY DOOR TAG (SEE ABBREV. SCHEDULE FOR TAG)
.01 DOORS THAT SWING INTO A ROOM OR SERVE A ROOM ARE NUMBERED AS THE ROOM.
.02 ALL CORRIDOR DOORS ARE NUMBERED AS THE CORRIDOR WITH THE LOWER NUMBER.
6. ALL WOOD DOORS (UNLESS NOTED ELSEWHERE) WILL COMPLY WITH CURRENT ADDITION OF THE AWS SECTION 9 DOORS STANDARDS AND WITH WDMA / ANSI CURRENT NATIONAL STANDARDS FOR WOOD DOORS
7. TYPICAL DOOR TYPE "F" UNLESS OTHERWISE NOTED.
8. TYPICAL FRAME TYPE "HOLLOW METAL DOOR FRAME" UNLESS OTHERWISE NOTED.
9. FLUSH WOOD DOOR W/ TRANSPARENT FINISH WILL HAVE CUSTOM GRADE A FACES / **WHITE MAPLE**, PLAIN SLICED / BOOK MATCH VENEER LEAVES & BALANCE MATCH VENEER ON DOOR FACE
10. FLUSH WOOD DOORS MAY BE NOTED FOR STAINED FINISH / GRADE A FACE / MAPLE, PLAIN SLICED - MATCH VENEER LEAVES. WD VENEER SLCTD. BY ARCHITECT
11. SOLID CORE DOORS WILL COMPLY WITH ANSI A208.1, GRADE LD-2 PARTICLEBOARD
12. WET CONDITION - SEAL INSIDE DOOR WITH HYDRO SEAL (SILKEN) / PROVIDE NEOPRENE WEATHER GASKET @ BASE
13. GC TO PROVIDE FULL SOUND GASKET @ ROOM DOOR - REQ'D MIN STC RATING: **46**
14. ALL DOORS TO BE CONST. / PERFORMANCE DUTY: HVY. DUTY
15. ALL DOORS VERTICAL EDGE TO MATCH FACE VENEER / ALL PAIRS AND SETS TO MATCH VENEER & GRADE SELECTED. FACE ASSEMBLY ADHESIVE TYPE II (WATER-RESISTANT)
16. DOORS TO COMPLY WITH WDMA - PREMIUM GRADE CONSTRUCTION. FACTORY FINISHES WHEN SPEC TO BE ARCYLATED UV CURABLE EPOXY PER AWI 1500
17. FIRE RATED DOORS TO COMPLY WITH CURRENT IBC CODE IN PROJECT JURISDICTION / NFPA 252 / UL 10 B & C / NFPA 101 / STNDARDS & UL RATINGS FOR SPCIFD HOUR RATING AND IF REQ. IMPACT & HEAT TEMPERATURE RISE CODES
18. PARTICLEBOARD CORE TO BE PC-5 TYPE II WATER RESISTANT (ANSI A208.1 / 1-LD-1)
19. FRAMES TO BE GALVANIZED FOR LOCATIONS WITH HIGH HUMIDITY (16 GAGE) ANY AND ALL REINFORCEMENTS ALSO GALVANIZE
20. SECURITY SYSTEM AND/OR FIRE ALARM TIE-IN REQUIRED
21. MAGNETIC HOLD OPEN REQUIRED
22. FIELD MEASUREMENTS REQUIRED
23. NEW DOOR TO BE PLACED INTO AN EXITING FRAMED OPENING - AND/OR NEW DOOR & NEW FRAME TO BE INSTALLED INTO EXIST. OPENING - FIELD MEASUREMENTS REQ.
24. SEE PROJECTS FINISH SCHEDULE / ELEVATION FOR APPLIED STAIN OR PAINT
25. IF NOT INDICATED IN SCHEDULE DOOR TO BE THE FOLLOWING SPECIFICATION
.01 - GRAIN PATTERN TO BE - PLAIN SLICED
.02 - HARDWOOD VENEER - WHITE OAK
.03 - WITH CLEAR TRANSPARENT FINISH
26. 3-PLY FLUSH HARDBOARD COMMERCIAL SERIES WITH RECYCLED PARTICLEBOARD CORE
27. DOOR TO BE PROVIDE WITH S/S 304 12 GA HALF HIEGHT KICK PLATES LOCATED ON BOTH SIDES OF DOOR
28. DOOR TO BE PART OF SPECIFIED STOREFRONT / DOOR / WINDOW FRAME SYSTEM TO MATCH ASSEMBLY'S FACTORY FINISH - AS INDICATED ON GLAZING AND / OR DR SCHED.
29. EXTERIOR DOOR IF NOTED SHALL MATCH ADJACENT WALL / FRAME ASSEMBLY FOR WIND EXPOSURE / FIRE RATING / IMPACT LOADS AS INDICATED IN CURRENT APPLICABLE BUILDING / FIRE CODE
30. DOOR TO BE PROVIDED WITH FSC CHAIN OF CUSTODY CERTIFICATION AS PART OF PROJECT REQUIRMENTS
31. DOOR TO BE PROVIDED WITH RECYCLED CONTENT CERTIFICATION AS PART OF PROJECT REQUIRMENTS
32. DOOR THRESHOLD TO BE PROVIDE BY DOOR MANUFACTURER AS PART OF INSTALLATION
33. REUSE / PATCH AND REPAIR EXISTING FRAME TO RECEIVE NEW SCHEDULED DOOR
34. PROVIDE SAMPLE OF STAIN ON SPECIFIED VENEER FOR THIS DOOR - FOR APPROVAL
35. PROVIDE SAMPLE OF FACTORY FINISH ON SPECIFIED SURFACE MATERIAL FOR THIS DOOR FOR APPROVAL
36. DR TO BE EXTRA HVY DUTY PARTICLEBRD CORE / NON RATED - FACTORY PAINTED FINISH
37. DOOR TO BE PART OF POCKET DOOR ASSEMBLY OR SLIDING RAIL - COORDINATION OF ADDITIONAL MOUNTING HARDWARE WILL BE REQUIRED - DOOR FABRICATION TO BE APPROVED FOR THIS USAGE. SEE HARDWARE SCHEDULE

REMARK # 38 - DOOR TO BE THE FOLLOWING SPECIFICATION (PROVIDE WHAT IS CHECKED BELOW)
___ PLAIN SLICED CUT PATTERN ___ BOOK MATCH VENEER PATTERN ___ RED OAK ___ NATURAL BIRCH ___ PINE
___ ROTARY CUT PATTERN ___ SLIP MATCH VENEER PATTERN ___ WHITE OAK ___ NATURAL CHERRY ___ POPLAR
___ QUARTER CUT PATTERN ___ RANDOM MATCH VENEER PATTERN ___ WHITE MAPLE ___ MAHOGANY ___ WALNUT
___ RIFT CUT PATTERN ___ END MATCH VENEER PATTERN ___ WHITE BIRCH ___ OTHER / SEE SPEC ___ ALDER

REMARK # 39 - DOOR TO BE THE FOLLOWING SPECIFICATION (PROVIDE WHAT IS CHECKED BELOW)
___ PREMIUM / AA GRADE ___ SELECT GRADE ___ RUNNING MATCH VENEER ASSEMBLY ___ MATCH EXISTING SPECIES AND VENEER
___ CUSTOM / A GRADE ___ NATURAL GRADE ___ BALANCE MATCH VENEER ASSEMBLY ___ MATCH SAMPLE PROVIDE BY DESIGN TEAM

REMARK # 40 - SEE FOOT NOTE ON DOOR SCHEDULE FOR MORE SPECIFICATION INFORMATION

DOOR/FAME SCHEDULE LEGEND
SCALE: N.T.S

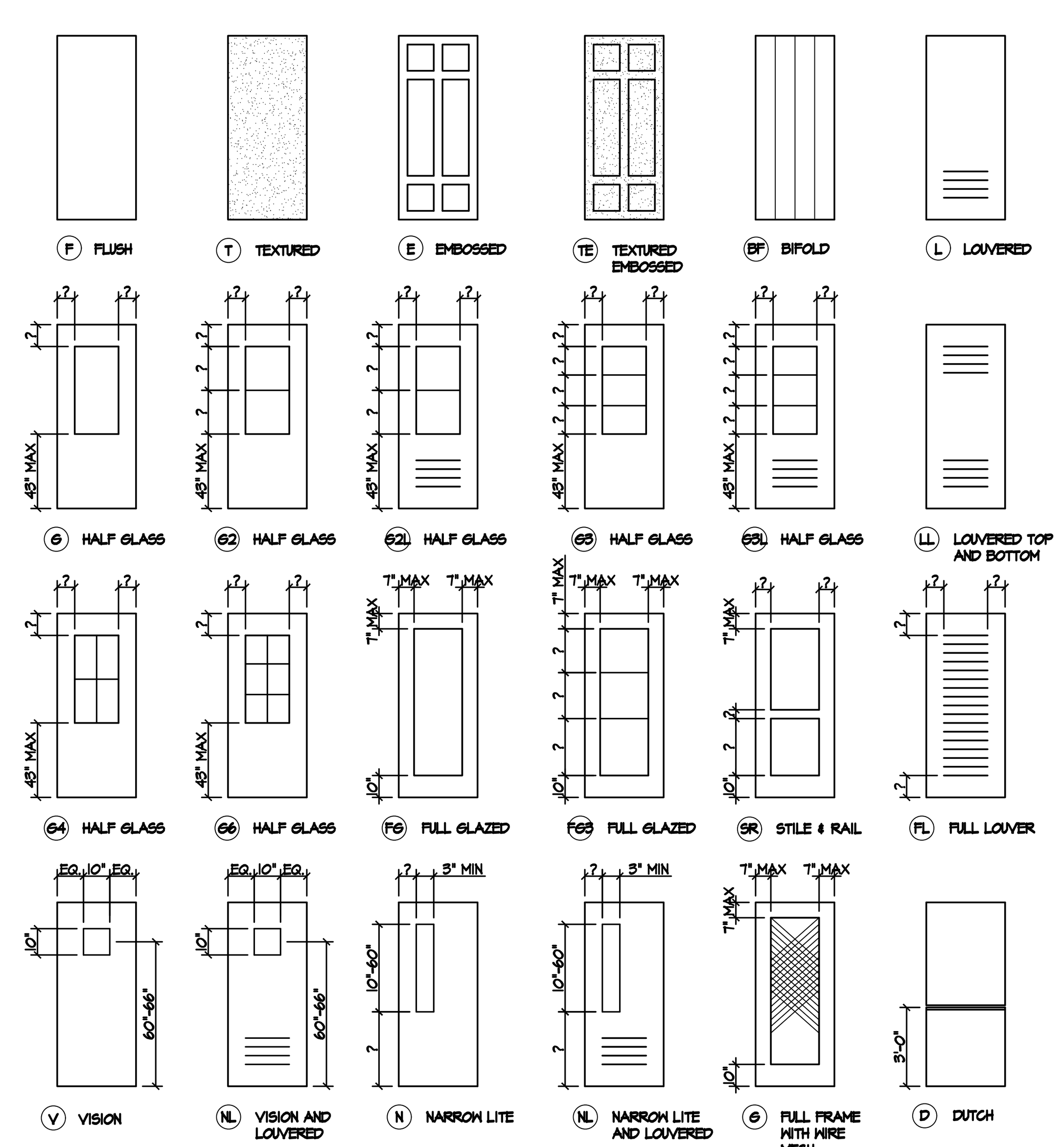

DOOR TYPE
SCALE: 1/4" = 1'-0"
STANDARD DOOR DESIGN NOMENCLATURE (PER STEEL DOOR INSTITUTE RECOMMENDATIONS)

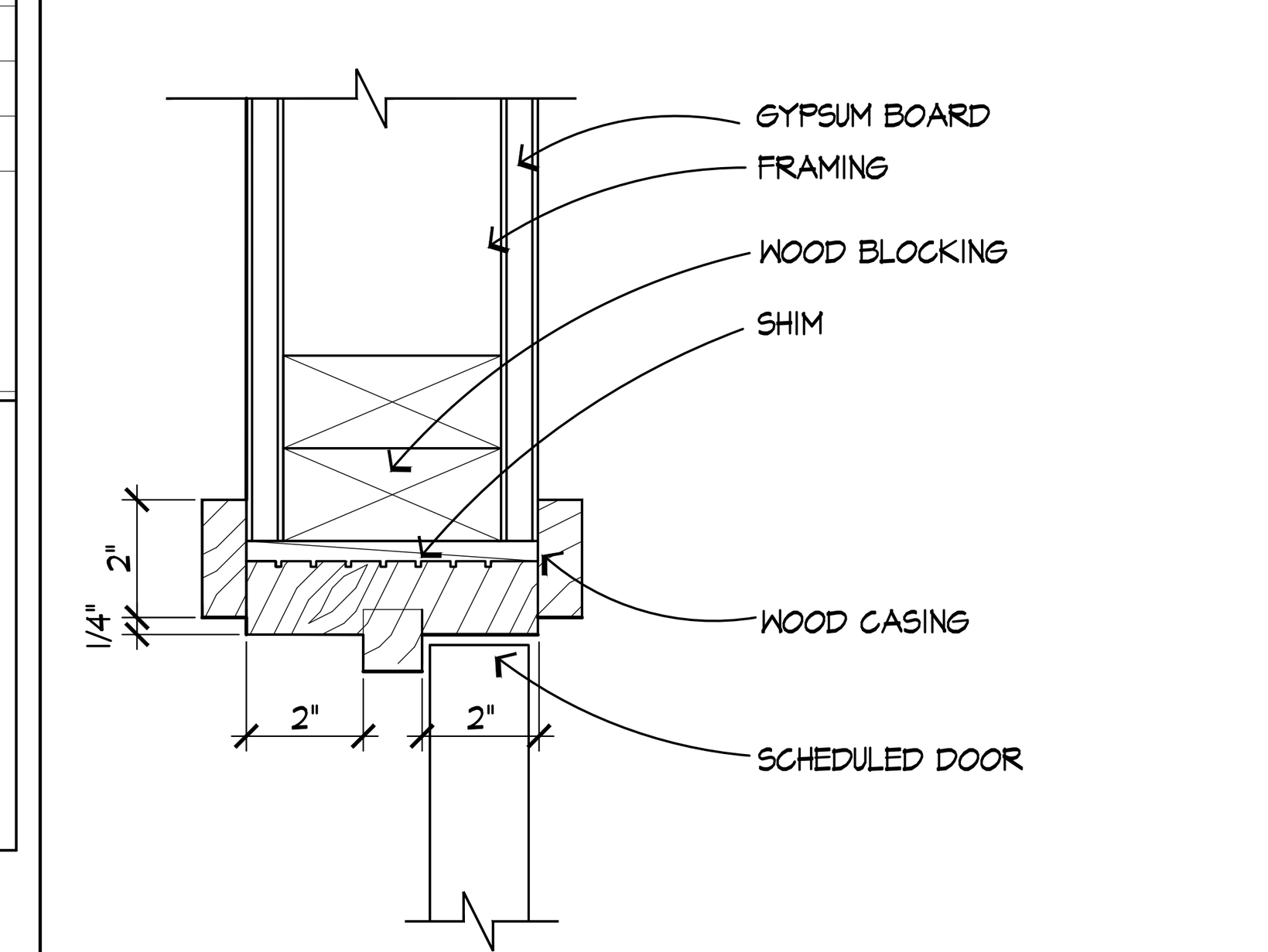

**SEE INTERIOR ELEVATIONS FOR SCHEDULED FINISH AT WOOD FRAMES

4 TYPICAL DOOR FRAME JAMB, HEAD AND SILL
SCALE: 3" = 1'-0"
WDFRAMSa.dwg

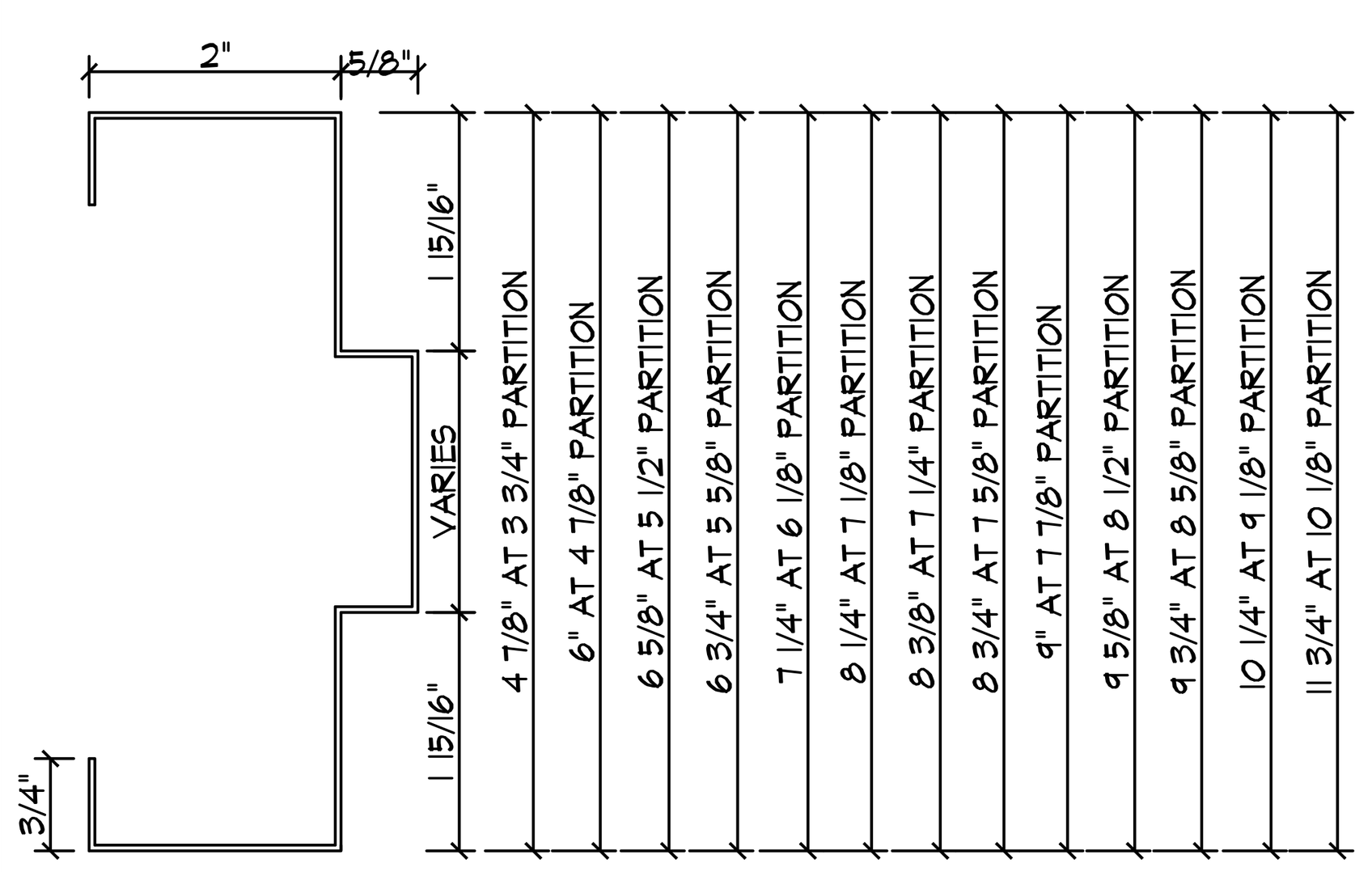

5 TYPICAL DOOR FRAME JAMB
SCALE: 6"=1'-0"
DFDET1-4

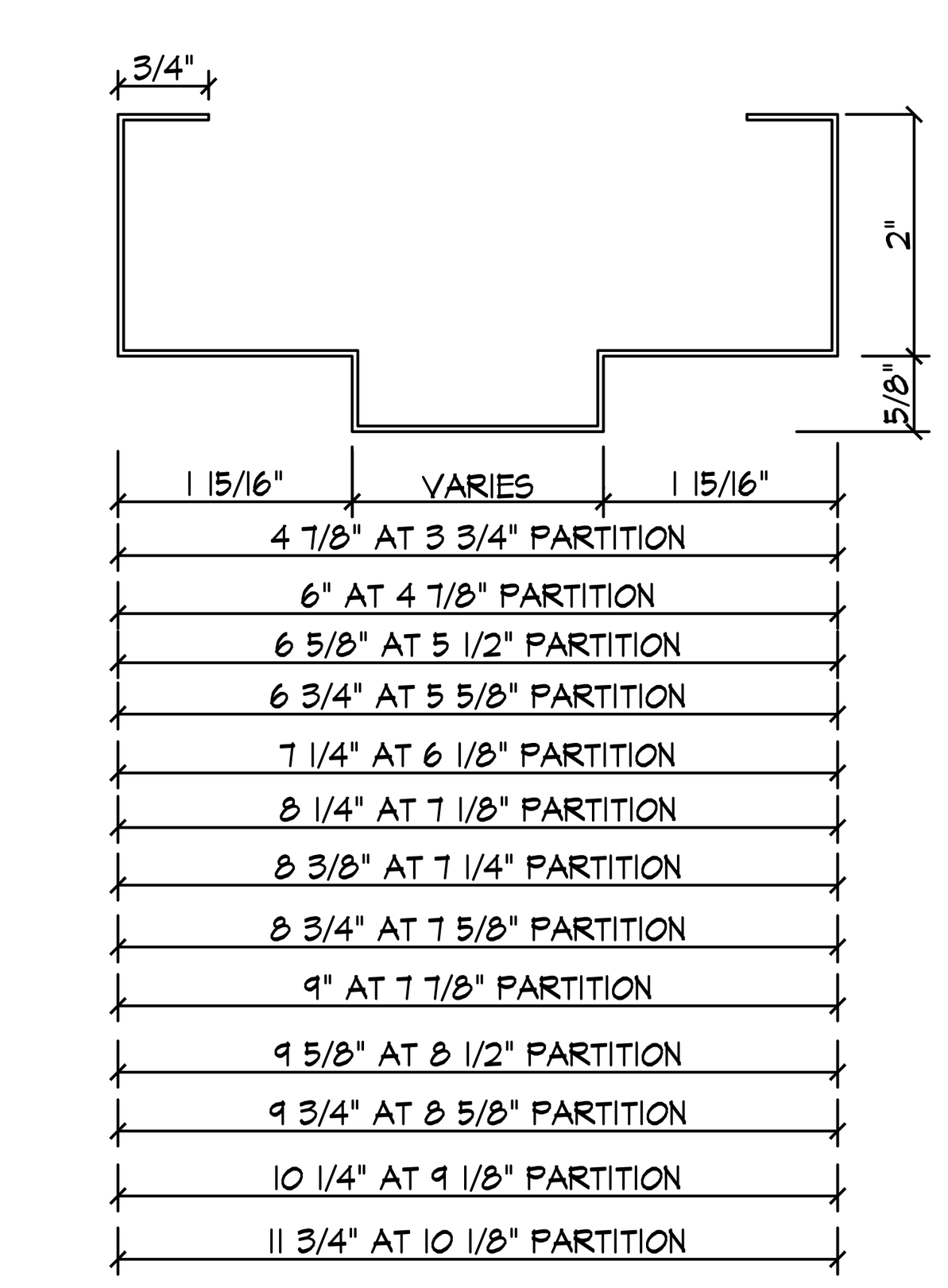

6 TYPICAL DOOR FRAME HEAD
SCALE: 6"=1'-0"
DFDET1-3

© 2022 LDL STUDIO INC.

ARCHITECT OF RECORD:
LDL STUDIO
ARCHITECT / HOSPITALITY DESIGNER
LDL STUDIO, INC.
106 Putnam Street
Providence, RI 02909
P: 401.274.4516
F. 401.421.2631
www.ldlstudio.com
Architect of Record: Gary M. Lepore, AIA

CERTIFICATION:
GARY M. LEPORE No. 2750 REGISTERED ARCHITECT

CONSULTANTS:
M/E/P & FP ENGINEER:
HP ENGINEERING CONSULTING ENGINEERS, P.C.
15 MAIDEN LANE
NORTH HAVEN, CT
P: 203-239-9425
JOHN PHILLIPS, P.E.
STRUCTURAL ENGINEER:
AMR ENGINEERING INC.
82 SCENIC DRIVE
WEST WARWICK , RI 02893
P: 401.559.3659
ANTHONY ROTONDO, P.E.

OWNER:
ROGER WILLIAMS PARK ZOO
RHODE ISLAND ZOOLOGICAL ASSOC. FOR THE ROGER WILLIAMS PARK ZOO
1000 ELMWOOD AVENUE
PROVIDENCE
RHODE ISLAND 02907

NUMBER	DATE	DESCRIPTION

REVISIONS:

PROJECT NAME:
RED PANDA EXHIBIT
RWPZ
1000 ELMWOOD AVENUE
PROVIDENCE
RHODE ISLAND 02907

SUBMISSION TYPE: PERMIT SET

PROJECT TYPE: NEW CONSTRUCTION

CLIENT NUMBER: RWPZ 2022_01

ISSUE DATE: NOVEMBER 14, 2022

SHEET NAME: DOOR / HARDWARE AND TYP. DOOR FRAME DETAILS

DRAWING SCALE:
PROJECT NUMBER: 2022-03
DATE ISSUED: 11/14/2022

A8.00

WWW.LDLSTUDIO.COM LDL STUDIO INC. - CELEBRATING 27 YEARS OF AWARD WINNING SERVICE 1995 - 2022 ARCHITECTS AIA 2030 CHALLENGE ADOPTER
IF THIS SHEET IS NOT 24 X 36 IT IS A REDUCED SCALE PRINT - SCALE ACCORDINGLY

WINDOW SCHEDULE

ITEM #	WIDTH	HEIGHT	WINDOW TYPE	TRANSOM TYPE	EXT	INT	FINISH	WINDOW GL TYPE	FRAME TYPE / DTL	REMARKS	MANUFACTURER	MANUF. #
W-01	3'-0"	3'-0"	FIXED	--	X		POWDER COATED	IG # 3	DETAIL _A		PELLA WINDOW	PELLA IMPERVIA
W-02	3'-0"	3'-0"	FIXED	--	X		POWDER COATED	IG # 3	DETAIL _A			
W-03	4'-0"	3'-0"	FIXED	--	X		POWDER COATED	IG # 3	DETAIL _A			
W-04	8'-0"	4'-6"	FIXED	--	X		POWDER COATED	IG # 3	DETAIL _A			
W-05	8'-0"	4'-6"	FIXED	--	X		POWDER COATED	IG # 3	DETAIL _A			
W-06	8'-0"	2'-2"	FIXED	--	X		POWDER COATED	IG # 3	DETAIL _A	SEE BID ALTERNATE		

SCHEDULE NOTE: 1) ALL WINDOWS TO BE COLOR BLACK

2) GC TO SUBMIT MANF./ STYLE SPECIFICATIONS ON WINDOWS SELECTED TO MEET PERFORMANCE INDICATED FOR REVIEW AND APPROVAL BY ARCHITECT PRIOR TO PURCHASE.

3) GC TO FIELD VERIFY ALL GLAZING DIMENSIONS AND ALL ROUGH OPENINGS. GLAZING MANUF/INSTALLER MUST SUBMIT SAMPLES AND SHOP DRAWINGS FOR REVIEW BY ARCHITECT PRIOR TO PURCHASE AND INSTALL.

3) ALL GLASS TO BE 1 INCH INSULATED SAFETY GLASS WITH HIGHEST RATING OF NON GLARE / LOW E-RATED GLAZING - GC TO SUBMIT SPECIFICATION / SAMPLE FOR APPROVAL PRIOR TO ORDER -NON GLARE IS PRIORITY FOR RWPZOO SO VISITORS CAN OBSERVE ANIMALS IN INDOOR HABITAT

GC TO ENSURE RATED WINDOW FOR APPLICABLE WIND RATINGS AND EXPOSURE

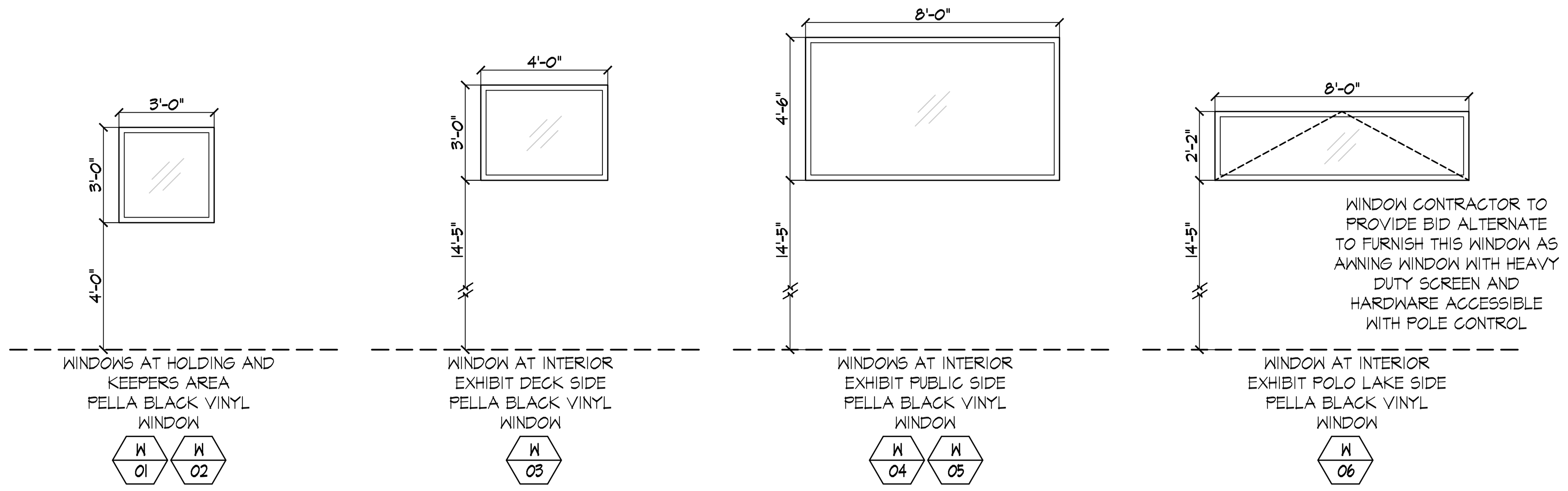

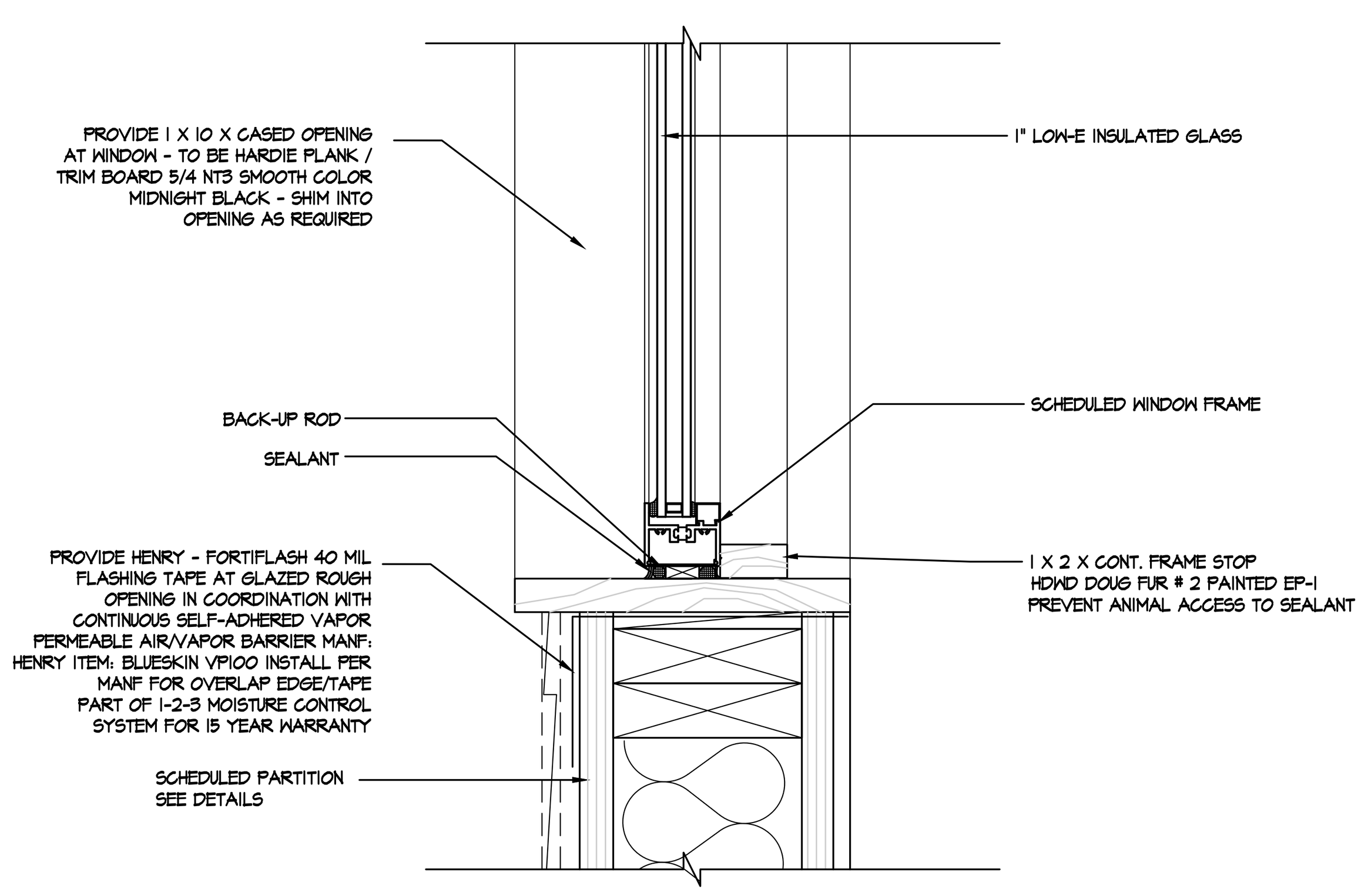

A WINDOW SILL DETAIL (JAMB TO BE SIMILAR)
SCALE: 3" = 1'-0"

GENERAL NOTES:
1) SEE GLAZING SCHEDULE FOR SIZE AND MANUFACTURER OF GLAZING COMPONENTS FOR PROJECT.
2) ALL STANDARD GLAZED OPENINGS INDICATED TO BE PELLA VINYL IMPERVIA / WINDOWS (IMPACT) WILL BE PROVIDED WITH FRAME PROGRAM AS ILLUSTRATED. CONTACT PELLA WINDOW REPRESENTATIVE COSIMO D'ELIA AT 508-304-4115 FOR COORDINATION OF ORDER / QUOTE FOR PELLA WINDOWS.
3) ALL EXTERIOR GLAZING WILL BE FURNISHED WITH MAX. ALLOWABLE NON GLARE / TINT FILM - COLOR SELECTED / APPROVED BY RWPZOO / ARCHITECT.
4) ALL GLAZING WILL BE 1 INCH SAFETY / INSULATED IMPACT GLASS AT LEVEL ONE AND LEVEL 2 INTERIORS PER **RWP ZOO / RI BUILDING CODE** FOR GLASS AT GRADE AND AT PUBLIC 18 INCHES ABOVE FLOOR (PELLA: INSULATED DUAL IMPACT ANNEALED LOW-E PVB ADVANCED LOW-E INSULATING GLASS 1")
IN ADDITION, ALL EXTERIOR GLAZING ON PROJECT WILL MEET WIND LOAD / HURRICANE AND IMPACT RESISTANT CRITERIA AS REQUIRED BY CURRENT **RI** STATE BUILDING CODE FOR PROJECT LOCATION
5) PELLA WINDOWS WILL BE BLACK EXTERIOR / COLOR: BLACK INTERIOR / COLOR CHART TO BE SUBMITTED FOR APPROVAL
6) OPEN
7) GLAZING AND STOREFRONT SUPPLY COMPANY MUST PROVIDE CONTRACTOR AND ARCHITECT SUBMITTALS/ SHOP DRAWINGS AND CUT SHEETS FOR APPROVAL PRIOR TO ORDER, FABRICATION AND INSTALL
8) SEE GLAZING COMPONENT SCHEDULE FOR MULLIONS IF REQ.
9) SEE SHEET **A8.01** FOR FRAME DETAILS
10) IF REQUIRED, ALL WINDOW & ALUMINUM STOREFRONT WILL BE DEFINED IN GLAZING SCHEDULE AND SHOP DRAWINGS AND SUBMITTALS WILL BE REQUIRED PRIOR TO FABRICATION AND INSTALLATION.
11) SEE SHEET **A8.01** FOR WINDOW SPECIFICATION

FIBERGLASS FIXED FRAME WINDOWS

PART 1 GENERAL

1.1 SECTION INCLUDES

A. FIBERGLASS FIXED FRAME WINDOWS.

1.2 RELATED SECTIONS

A. SECTION 07270 (07 27 00) - AIR BARRIERS: WATER-RESISTANT BARRIER.

B. SECTION 07920 (07 92 00) - JOINT SEALANTS: SEALANTS AND CAULKING.

1.3 REFERENCES

A. AMERICAN ARCHITECTURAL MANUFACTURERS ASSOCIATION (AAMA):
1. AAMA 502 - VOLUNTARY SPECIFICATION FOR FIELD TESTING OF WINDOWS AND SLIDING DOORS.
2. AAMA 624 - VOLUNTARY PERFORMANCE REQUIREMENTS AND TEST PROCEDURES FOR ORGANIC COATINGS ON FIBER REINFORCED THERMOSET PROFILES.

B. AMERICAN SOCIETY FOR TESTING AND MATERIALS (ASTM):
1. ASTM C 1036 - FLAT GLASS.
2. ASTM C 1048 - HEAT-TREATED FLAT GLASS--KIND HS, KIND FT COATED AND UNCOATED GLASS.
3. ASTM E 283 - RATE OF AIR LEAKAGE THROUGH EXTERIOR WINDOWS, CURTAIN WALLS AND DOORS UNDER SPECIFIED PRESSURE DIFFERENCE ACROSS THE SPECIMEN.
4. ASTM E 547 - WATER PENETRATION OF EXTERIOR WINDOWS, CURTAIN WALLS AND DOORS BY CYCLIC STATIC AIR PRESSURE DIFFERENTIAL.
5. ASTM E 1105 - STANDARD TEST METHOD FOR FIELD DETERMINATION OF WATER PENETRATION OF EXTERIOR WINDOWS, DOORS, SKYLIGHTS AND CURTAIN WALLS BY UNIFORM STATIC AIR PRESSURE DIFFERENCE.

C. WINDOW AND DOOR MANUFACTURERS ASSOCIATION (WDMA):
1. ANSI/AAMA/NWWDA 101/I.S.2 - VOLUNTARY SPECIFICATIONS FOR ALUMINUM, VINYL (PVC) AND WOOD WINDOWS AND GLASS DOORS.

1.4 PERFORMANCE REQUIREMENTS

A. WINDOWS SHALL MEET RATING FW-CW-PG 50 SPECIFICATIONS IN ACCORDANCE WITH ANSI/AAMA/NWWDA 101/I.S.2/A440-08 OR ANSI/AAMA/WDMA 101/I.S.2/A440-11.

B. WINDOW AIR LEAKAGE, ASTM E 283: WINDOW AIR LEAKAGE WHEN TESTED AT 1.57 PSF (25 MPH) SHALL BE 0.05 CFM/FT^2 OF FRAME OR LESS.

C. WINDOW WATER PENETRATION, ASTM E 547: NO WATER PENETRATION THROUGH WINDOW WHEN TESTED UNDER STATIC PRESSURE OF 7.5 PSF (54 MPH) AFTER 4 CYCLES OF 5 MINUTES EACH, WITH WATER BEING APPLIED AT A RATE OF 5 GALLONS PER HOUR PER SQUARE FOOT.

D. FACTORY MULLION STRUCTURAL PERFORMANCE (PER IBC SECTION 16, IBC SECTION 24, AND AAMA 450): [STRUCTURAL PERFORMANCE OF MULLIONS AT PROJECT DESIGN PRESSURE SHALL BE VALIDATED BY TESTING] [DEFLECTION OF MULLIONS SHALL BE ENGINEERED TO L/175 OR 3/4" MAX. AT PROJECT DESIGN PRESSURE (CW/AW PERFORMANCE)].

1.5 SUBMITTALS

A. SUBMIT IN ACCORDANCE WITH DIVISION 1 REQUIREMENTS.

B. PRODUCT DATA: SUBMIT MANUFACTURER'S PRODUCT DATA, INCLUDING INSTALLATION INSTRUCTIONS.

C. SHOP DRAWINGS: SUBMIT MANUFACTURER'S SHOP DRAWINGS, INDICATING DIMENSIONS, CONSTRUCTION, COMPONENT CONNECTIONS AND LOCATIONS, ANCHORAGE METHODS AND LOCATIONS, HARDWARE LOCATIONS, AND INSTALLATION DETAILS.

1.7 DELIVERY, STORAGE, AND HANDLING

A. DELIVERY: DELIVER MATERIALS TO SITE UNDAMAGED IN MANUFACTURER'S OR SALES BRANCH'S ORIGINAL, UNOPENED CONTAINERS AND PACKAGING, WITH LABELS CLEARLY IDENTIFYING MANUFACTURER AND PRODUCT NAME. INCLUDE INSTALLATION INSTRUCTIONS.

B. STORAGE:
1. STORE MATERIALS IN ACCORDANCE WITH MANUFACTURER'S INSTRUCTIONS.
2. STORE MATERIALS OFF GROUND AND UNDER COVER.
3. PROTECT MATERIALS FROM WEATHER, DIRECT SUNLIGHT, AND CONSTRUCTION ACTIVITIES.

C. HANDLING: PROTECT MATERIALS AND FINISH DURING HANDLING AND INSTALLATION TO PREVENT DAMAGE.

PART 2 PRODUCTS

2.1 MANUFACTURER

A. PELLA CORPORATION, 102 MAIN STREET, PELLA, IOWA 50219. CONTACT JACQUELINE V PAGEL, 401-500-5249, JPAGEL@GOPELLA.COM WEBSITE WWW.PELLA.COM.

2.2 FIBERGLASS FIXED FRAME WINDOWS

A. FIXED FRAME WINDOWS: PELLA IMPERVIA.
1. FACTORY-ASSEMBLED FIXED FRAME WINDOW.
2. FRAME MATERIAL: 5-LAYER, PULTRUDED-FIBERGLASS MATERIAL, REINFORCED WITH INTERLOCKING MAT.

B. FRAME:
1. TYPE: BLOCK FRAME.
2. INTERIOR AND EXTERIOR FRAME: PULTRUDED, FIBERGLASS COMPOSITE [WITH FOAM INSERTS].
3. OVERALL FRAME DEPTH: 3-1/4 INCHES.
4. NOMINAL WALL THICKNESS OF FIBERGLASS MEMBERS: 0.070 INCH TO 0.135 INCH.
5. FRAME CORNERS:
A. MITERED.
B. JOINED AND BONDED WITH NYLON CORNER LOCK, AND MECHANICAL FASTENERS, AND INJECTED WITH POLYURETHANE ADHESIVE SEALANT.
6. WEEP SYSTEM AT SILL TO CHANNEL INCIDENTAL MOISTURE TO THE EXTERIOR.

C. GLAZING:
1. FLOAT GLASS: ASTM C 1036, QUALITY 1.
A. TEMPERED GLASS: ASTM C 1048.

2. TYPE: POLYURETHANE REACTIVE (PUR) HOT-MELT GLAZED, DUAL-PANE 1-INCH, DUAL-SEAL, TEMPERED INSULATING SAFETY GLASS, MULTI-LAYER LOW-E COATED WITH ARGON.

2.4 TOLERANCES

A. WINDOWS SHALL ACCOMMODATE THE FOLLOWING OPENING TOLERANCES:
1. VERTICAL DIMENSIONS BETWEEN HIGH AND LOW POINTS: PLUS 1/4-INCH, MINUS 0 INCH.
2. WIDTH DIMENSIONS: PLUS 1/4-INCH, MINUS 0 INCH.
3. BUILDING COLUMNS OR MASONRY OPENINGS: PLUS OR MINUS 1/4-INCH FROM PLUMB.

2.5 FINISH

A. EXTERIOR AND INTERIOR FINISH: FACTORY-APPLIED POWDER-COAT PAINT, COMPLY WITH AAMA 624.
1. COLOR: BLACK

2.6 INSTALLATION ACCESSORIES

A. FLASHING/SEALANT TAPE: PELLA SMARTFLASH.
1. ALUMINUM-FOIL-BACKED BUTYL WINDOW AND DOOR FLASHING TAPE.
2. MAXIMUM TOTAL THICKNESS: 0.013 INCH.
3. UV RESISTANT.
4. VERIFY SEALANT COMPATIBILITY WITH SEALANT MANUFACTURER.

B. EXTERIOR PERIMETER SEALANT: @PELLA WINDOW AND DOOR INSTALLATION SEALANTA OR EQUIVALENT HIGH QUALITY, MULTI-PURPOSE SEALANT AS SPECIFIED IN THE JOINTS SEALANT SECTION.

PART 3 EXECUTION

3.1 EXAMINATION

A. EXAMINE AREAS TO RECEIVE WINDOWS. NOTIFY ARCHITECT OF CONDITIONS THAT WOULD ADVERSELY AFFECT INSTALLATION OR SUBSEQUENT USE. DO NOT PROCEED WITH INSTALLATION UNTIL UNSATISFACTORY CONDITIONS ARE CORRECTED.

3.2 INSTALLATION

A. INSTALL WINDOWS IN ACCORDANCE WITH MANUFACTURER'S INSTRUCTIONS.
B. INSTALL WINDOWS TO BE WEATHER-TIGHT.
C. MAINTAIN ALIGNMENT WITH ADJACENT WORK.
D. SECURE ASSEMBLY TO FRAMED OPENINGS, PLUMB AND SQUARE, WITHOUT DISTORTION.
E. INTEGRATE WINDOW SYSTEM INSTALLATION WITH EXTERIOR WATER-RESISTANT BARRIER USING FLASHING/SEALANT TAPE. APPLY AND INTEGRATE FLASHING/SEALANT TAPE WITH WATER-RESISTANT BARRIER USING WATERSHED PRINCIPLES IN ACCORDANCE WITH WINDOW MANUFACTURER'S INSTRUCTIONS.
F. PLACE INTERIOR SEAL AROUND WINDOW PERIMETER TO MAINTAIN CONTINUITY OF BUILDING THERMAL AND AIR BARRIER USING INSULATING FOAM SEALANT.
G. SEAL WINDOW TO EXTERIOR WALL CLADDING WITH SEALANT AND RELATED BACKING MATERIALS AT PERIMETER OF ASSEMBLY.

3.3 CLEANING

A. CLEAN WINDOW FRAMES AND GLASS IN ACCORDANCE WITH DIVISION 1 REQUIREMENTS.
B. Do not use harsh cleaning materials or methods that would damage finish or glass.
C. Remove labels and visible markings.

3.4 PROTECTION

A. Protect installed windows to ensure that, except for normal weathering, windows will be without damage or deterioration at time of substantial completion.

END OF SECTION

ARCHITECT OF RECORD:
LDL STUDIO
ARCHITECT / HOSPITALITY DESIGNER
LDL STUDIO, INC.
106 Putnam Street
Providence, RI 02909
P: 401.274.4516
F. 401.421.2631
www.ldlstudio.com
Architect of Record: Gary M. Lepore, AIA

CERTIFICATION:

CONSULTANTS:
M/E/P & FP ENGINEER:
HP ENGINEERING CONSULTING ENGINEERS, P.C.
15 MAIDEN LANE
NORTH HAVEN, CT
P: 203-239-9425
JOHN PHILLIPS, P.E.
STRUCTURAL ENGINEER:
AMR ENGINEERING INC.
82 SCENIC DRIVE
WEST WARWICK , RI 02893
P: 401.559.3659
ANTHONY ROTONDO, P.E.

OWNER:
RHODE ISLAND ZOOLOGICAL ASSOC. FOR THE ROGER WILLIAMS PARK ZOO
1000 ELMWOOD AVENUE
PROVIDENCE
RHODE ISLAND 02907

NUMBER	DATE	DESCRIPTION

REVISIONS:

PROJECT NAME:
RED PANDA EXHIBIT
RWPZ
1000 ELMWOOD AVENUE
PROVIDENCE
RHODE ISLAND 02907

SUBMISSION TYPE: PERMIT SET

PROJECT TYPE: NEW CONSTRUCTION

CLIENT NUMBER: RWPZ 2022_01

ISSUE DATE: NOVEMBER 14, 2022

SHEET NAME: WINDOWS TYPES/ GLAZING

DRAWING SCALE:

PROJECT NUMBER: 2022-03

DATE ISSUED: 11/14/2022

A8.01

© 2022 LDL STUDIO INC.

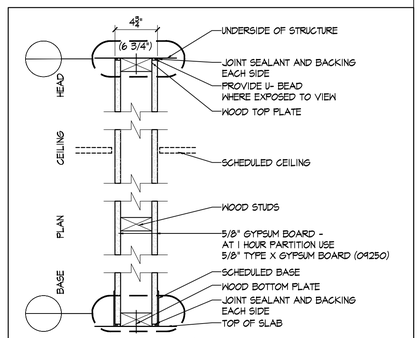

A	4 3/4" (3 1/2" STUD) NO FIRE RESISTANCE RATING STC = 50-54	LIMITING HEIGHT 14'-0"
A1	4 3/4" (3 1/2" STUD) 1 HOUR FIRE - UL# U305 STC = 50-54	LIMITING HEIGHT 14'-0"
A2	6 3/4" (5 1/2" STUD) NO FIRE RESISTANCE RATING STC = 50-54	LIMITING HEIGHT 20'-0"
A3	6 3/4" (5 1/2" STUD) 1 HOUR FIRE - UL# U305 STC = 50-54	LIMITING HEIGHT 20'-0"

PARTITION TYPE A, A1, A2 AND A3

SCALE: 1-1/2" = 1'-0"

1) PARTITION SYMBOLS ARE NOTED ON THE FLOOR PLANS, SEE ABBREVIATION SHEET (G1.0) FOR SYMBOL

2) ALL GYPSUM BOARD IS TO BE 5/8" TYPE "X", UNLESS OTHERWISE NOTED.

3) REFERENCE EGRESS PLANS FOR LOCATION AND EXTENTS OR LIMIT OF RATED PARTITIONS.

4) ALL FIRE RATED ASSEMBLIES ARE BASED UPON IBC, UL, ASHRAE, ASTM AND U.S. GYPSUM ASSOCIATION (GA) TEST DATA. FIRE RATED PARTITIONS ARE TO BE CONSTRUCTED IN ACCORDANCE WITH THE REQUIREMENTS OF THE TESTING AGENCIES. REFER TO SPECIFIC TEST REPORTS INDICATED FOR REQUIRED COMPONENTS AND ASSEMBLY.

5) ACOUSTIC PARTITIONS ARE TO BE CONSTRCUTED IN ACCORDANCE WITH THE REQUIREMENTS OF TESTING AGENCIES, REFER TO SPECIFIC TEST REPORTS FOR REQUIRED COMPONENTS AND ASSEMBLY. PROVIDE ACOUSTIC SEALANT AROUND WALL PERIMETER & OPENINGS AT BASE OF GWB / GYP LAYER. SEAL ALL PENETRATIONS & OFFSETS BY (1) STUD MINIMUM. INSTALL STUD RUNNER WITH ACOUSTIC FOAM TAPE WHERE DESIGNATED BY ASSEMBLY.

6) AT WET AREAS, SUBSTITUTE FACE LAYER GYP BD WITH (1) LAYER WATER RESISTANT GWB / GYP PANEL, UNLESS INDICATED BY PARTITION TYPE AND/OR DRAWINGS.

7) ALL OTHER PARTITIONS ARE TO BE CONSTRUCTED IN ACCORDANCE WITH THE REQUIREMENTS OF THE SPECIFIC MATERIALS MANUFACTURER AND INDUSTRY STANDARDS.

8) SEE SHEET A0.0 FOR RESPONSIBILITY IN RECEIVING MATERIALS AND MATERIALS WITH HIGH RESISTANCE TO MOLD

9) BLOCKING IS REQUIRED AT THE FOLLOWING LOCATIONS: WALL MOUNTED CABINETS, ACCESSORIES, EQUIPMENT, DOORSTOPS, HOLD-OPENS, TOILET ROOM PARTITIONS AND ACCESSORIES, AND OTHER LOCATIONS AS REQUIRED BY MANUFACTURER SPECIFICATIONS OR INDUSTRY STANDARDS. SEE ALL INTERIOR ELEVATIONS & MILLWORK DETAILS FOR ADDTIONAL BLOCKING LOCATIONS AS INDICATED IN DRAWING SET.

10) PROVIDE BRACING AT ALL LOCATIONS PER US GYPSUM GUIDELINES FOR PARTITION FRAMING

11) AT FURRING ASSEMBLIES PROVIDE NAILING AS PER GA. NO. ASSOCIATED TO THAT ASSEMBLY AND/OR LOCAL BUILDING CODE REGULATIONS

12) 1-HOUR AND 2-HOUR WALL RATING CONTINUES THROUGH INTERSECTIONS WITH NON-RATED WALLS, TYPICAL.

13) ALL PARTITIONS UNLESS INDICATED OTHERWISE WILL BE PREPARED AND FINISHED TO INDUSTRY STANDARD DEFINEDS AS LEVEL 4 AND LEVEL 5. LEVEL 4 FINISH TO BE USED ON ALL PARTITIONS TO RECEIVE A SCHEDULED WALL COVERING, TILE OR OTHER COVERING MATERIAL. LEVEL 5 FINISH TO BE USED ON ALL PARTITIONS TO RECEIVE A SCHEDULE PAINT, PRIMER OR APPLIED MATERIAL. (FINISH LEVEL AS DEFINED USG CONSTRUCTION HANDBOOK)

PARTITION SCHEDULE NOTES

SCALE: N.T.S.

IF THIS SHEET IS NOT 24 X 36 IT IS A REDUCED SCALE PRINT. SCALE ACCORDINGLY

WWW. LDLSTUDIO. COM LDL STUDIO INC. - CELEBRATING 27 YEARS OF AWARD WINNING ARCHITECTS AIA 2030 CHALLENGE ADOPTER PLANNING SERVICE 1995 - 2022

ARCHITECT OF RECORD:

LDL STUDIO
ARCHITECT / HOSPITALITY DESIGNER

LDL STUDIO, INC.
106 Putnam Street
Providence, RI 02909
P: 401.274.4516
F. 401.421.2631
www.ldlstudio.com

Architect of Record: Gary M. Lepore, AIA

CERTIFICATION:

CONSULTANTS:

M/E/P & FP ENGINEER:
HP ENGINEERING CONSULTING ENGINEERS, P.C.
15 MAIDEN LANE
NORTH HAVEN, CT
P: 203-239-9425
JOHN PHILLIPS, P.E.

STRUCTURAL ENGINEER:
AMP ENGINEERING INC.
82 SCENIC DRIVE
WEST WARWICK , RI 02893
P: 401.559.3659
ANTHONY ROTONDO, P.E.

OWNER:

ROGER WILLIAMS PARK ZOO

RHODE ISLAND ZOOLOGICAL ASSOC.
FOR THE ROGER WILLIAMS PARK ZOO

1000 ELMWOOD AVENUE
PROVIDENCE
RHODE ISLAND 02907

NUMBER	DATE	DESCRIPTION

REVISIONS:

PROJECT NAME:

RED PANDA EXHIBIT

RWPZ
1000 ELMWOOD AVENUE
PROVIDENCE
RHODE ISLAND 02907

SUBMISSION TYPE:
PERMIT SET

PROJECT TYPE:
NEW CONSTRUCTION

CLIENT NUMBER:
RWPZ 2022_01

ISSUE DATE: NOVEMBER 14, 2022

SHEET NAME:
PARTITION SCHEDULE

DRAWING SCALE:

PROJECT NUMBER:
2022-03

DATE ISSUED:
11/14/2022

A8.02

© 2022 LDL STUDIO INC.

MATERIAL SCHEDULE 11/14/2022

SPECIFICATIONS HAVE BEEN CONFIRMED AT DATE OF ISSUE , GENERAL CONTRACTOR IS DIRECTED TO COMMENCE WITH COORDINATION OF MATERIALS AND CONTACT LISTED RESOURCES. DUE TO CURRENT MATERIALS SUPPLY CHAIN ANY DELAY MAY RESULT IN A FORCED CHANGE OF MATERIAL ; SUBJECT TO ADDITIONAL FEE TO COORDINATE RE-SELECTIONS. OWNER WILL START COORDINATION WITH ITEMS DIRECTED AS PURCHASED OR F.B.O.

JOB NAME: RED PANDA JOB #:2022_03

DATE:

LEGEND	#	ORDER IMMEDIATELY
	##	ORDER WITHIN 10 DAYS
	###	ORDER WITHIN 20 DAYS

MATERIAL SCHEDULE

SYM	ITEM	MANUFACTURER	MODEL	FINISH	DIM.	PUR BY	INST BY	PRIORITY	REMARKS
	ARCHITECTURAL SPECIALTY								
AS-1	EXTERIOR DRIFTWOOD SYNTH PLANK	EKENA MILLWORK ENDURATHANE FAUX WOOD SIDING THRU : ARCHITECTURALDEPOT.COM C:RYAN 888-573-3768 x7154	SKU PN916NRWM EACH PANEL IS 25.8 SQF	WEATHERED MOHAGANY	97" W X 38" H X 1 1/8" THCK	GC	GC	#	COORDINATE SQF AREA NEEDED WHEN ORDERING FOLLOW MANUF. GUIDELINES WHEN ORDERING
AS-2	EXTERIOR TOUNGE & GROOVE DECK	LOCALLY SOURCED ARNOLD LUMBER OR HOME DEPOT	BBS TREATED LUMBER SELECT GRADE TIMBER T&G DECKING BOARD	SOUTHERN YELLOW PINE	6" W X 2" THK X 12'L	GC	GC	#	COORDINATE SQF AREA NEEDED WHEN ORDERING SELECT GRADE- REVIEW DISCARD WOOD KNOTS
AS-3	ROOFING ARCH SHINGES	LOCALLY SOURCED MJ SUPPLY /GULF EAGLE OR HOME DEPOT	GAF ARCH TIMBERLINE HDZ ALGAE RESIST	CHARCOAL		GC	GC	#	ORDER ACCESSORIES LAYER LOCK 8" ICE SHIELD DRIP EDGE AND FRAME EDGE GAF COBRA RIDGE CAP SHINGLES GC TO PROVIDE MANUF WARRANTY SHEETS IN TURNOVER BOOK TO CLIENT
AS-4	WIRE MESH	CORNERS LIMITED JEFF SMITH 269-209-0088	BY VENDER	BY VENDER	BY VENDER	GC	VENDOR	#	48X96 IS STOCK INVENTORY/ GC MAY CHOOSE TO ORDER SHEET CUT AND EDGE FINISHED TO NEEDED OPENING SIZE DOES ADD 18 DAYS TO ORDER
AS-5	OUTSIDE CORNERS ST./ST	CAP INDUSTRIES 301-937-4383 WW.CAPCORNERGUARDS.COM	2 X 2 X 44 16 GA STAINLESS #4 CORNER GUARD	SATIN FINISH	2" X 2" 44" L	GC	GC	#	REVIEW FLAT ANCHOR SCREWS AND GC ADHESIVE GLUE TO AVOID ANY RAISED EDGES
AS-6	STAINLESS WALL BASE	SCHLUTER SUPPLY NEW ENGLAND 401-739-8000	DESIGN BASE-SL DBSL110EB METAL PROFILE WALL BASE	BRUSHED ST/ST V2A	4 3/8" HT 8'-0" L	GC	GC	#	COORDINATE WHEN ORDERING - INSIDE CORNER #90/DBSL110EB
AS-7	EXHIBIT WINDOW PRIVACY BLINDS	ONLINE BILNDSGALORE.COM 877-702-5463	CUSTOM GRAPHIC SHADE OUTSIDE MOUNT STANDARD CLUTCH GRAPHICS FB ZOO	BOTTOM BAR- BLACK BLACKOUT		OWNER	GC	#	OWNER TO DETERMINE GRAPHIC LOGO- - I.E." WE ARE SLEEPING" / GRAPHIC FB ZOO COLOR BACKGROUND WILL BE PRINTED FACE - BLACK-OUT- INTERIOR IS WHITE DUE TO MOUNTING HIEGHT- REVIEW IF BOTTOM HANDLE CAN BE MOUNTED TO BAR TO OPERATE WITH AN AWNINGS STYLE POLE FROM FLOOR LEVEL
	EXTERIOR PAINT								
EP-1	MAIN BUILDING TRIM	SHERWIN WILLIAMS COMMERCIAL 401- 781- 6615	PRIMER: MULTI PRIMER 6503-57106 PAINT: 650405830 DURATION LATEX- SATIN	SW 7069 IRON ORE	2 COATS REQUIRED	GC	PNTR	##	PAINTER TO APPLY 2 FINISHED COATS
EP-2	OPEN								
	EXT STAIN								
ES-1	EXT TRIM	PPG SIKKENS PROLUXE SRD PPG STORE 401-732-8999	ALL IN ONE COATING PENETRATING STAIN W/ GRAIN INHIBITR	COLOR 094 EBONY	EXTERIOR STAIN USED OVER WOOD	GC	PNTR	##	FOLLOW GUIDE FOR WOOD PREP WITH MEDIUM GRIT SANDPAPER COATING IS A STAIN AND FINISHING OIL COMBO
	PAINT								
P-1	CEILING PAINT	SHERWIN WILLIAMS COMMERCIAL 401- 781- 6615	PRIMER: NOT NEEDED PAINT: SUPER PAINT A86W00061 FLAT	SW 6224 MOUNTAIN AIR	2 COATS REQUIRED	GC	PNTR	##	SPRAY CEILING PAINT
P-2	EXHIBIT GENERAL WALL COLOR	SHERWIN WILLIAMS COMMERCIAL 401- 781- 6615	PRIMER: MULTI PURPOSE B51W00450 PAINT PRO INDUSTRIAL MULTI-SURFACE ACRYLIC EPOXY B66W01571-20- MATTE	SW 6190 FILMY GREEN	2 COATS REQUIRED	GC	PNTR	##	REVIEW EPOXY PAINT APPLICATION TINT PRIMER PAINTER TO APPLY 2 FINISHED COATS
P-3	BACK OF HOUSE WALL COLOR	SHERWIN WILLIAMS COMMERCIAL 401- 781- 6615	PRIMER: MULTI PURPOSE B51W00450 PAINT PRO INDUSTRIAL MULTI-SURFACE ACRYLIC EPOXY B66W01571-20- MATTE	SW 66413 RESTORATION IVORY	2 COATS REQUIRED	GC	PNTR	##	PAINTER TO APPLY 2 FINISHED COATS
P-4	BACK OF HOUSE CEILING PAINT	SHERWIN WILLIAMS COMMERCIAL 401- 781- 6615	PRIMER: MULTI PURPOSE B51W00450 PAINT SW EMERALD K37W00451- SATIN	SW 9136 LULLABY	2 COATS REQUIRED	GC	PNTR	##	PAINTER TO APPLY 2 FINISHED COATS
P-5	FEATURE WALL STONE COLORS EXHIBIT ROOM	SHERWIN WILLIAMS COMMERCIAL 401- 781- 6615	PRIMER: MULTI PURPOSE B51W00450 PAINT SW EMERALD K37W00451- SATIN	FX MIX SW7648-BIG CHILL SW7517-RIVERSEDGE SW7031-MEGAGREIGE SHADOW	2 COATS REQUIRED SW7060 ATTITUDE GREY	GC	PNTR	##	OVER DRYWALL COUMPOUND PAINTER TO APPLY 2 FINISHED COATS FAUX STONE EFFECT
P-6	OPEN								
	RESILIENT FLOORING								
RF-1	EPOXY SERVICE FLOOR	DUR-A-FLEX SAM SACKS 401-369-6564	POLYCRETE MDB EPOXY	POURED EPOXY CHARCOAL	VERIFY	GC	VENDOR	##	WALL BASE IN EPOXY S-COVE BASE FOR BAR DIE WALL INETRIOR / EQUIPMENT ALCOVES
	RESILIENT TRIM								
RX-1	WALL BASE	JOHNSONITE THRU WJ GROSVENOR 877-485-7900	BASEWORKS RUBBER THERMOSET RUBBER TS PART # TSB 476X100 1/8 TOE	#47 BROWN	6" H	GC	GC	#	RUBBER UTILITY WALL BASE PROFILE
RX-2	APPLY WALL BASE AS CHAIRRAIL PANEL CAP	JOHNSONITE THRU WJ GROSVENOR 877-485-7900	MILLWORK ACCESSORY SHOE MOLDING PART # SH-469-A	Ref. 440473043 #469 MISTIFY	1 1/2" H	GC	GC	#	REPURPOSE 1 1/2" SHOEBASE AS CHAIR RAIL CAP TO FRP PANEL CONTRACTORS ADHESIVE
	SPECIALTY FINISH	**DECORATIVE FINISHES**							
SP-1	INTERIOR FAUX STONE TEXTURE FEATURE WALL	BY PAINTER OR ZOO MAY HAVE DECORATIVE ARTIST RESOURCE	DRYWALL COMPOUND ROUGH TROWEL STONE EFFECT	MULTIPLE COLORS REFER TO P-5	VERIFY	GC	PAINTER OR ARTIST	#	GC TO COORDINATE WALL PREP WITH PAINTER REVIEW FINAL MATTE SET COAT TYPE COATING TO PREVENT SCRATCHING
	THRESHOLD								
TH-1	CONCRETE TO RES FLR	SCHLUTER SUPPLY NEW ENGLAND 401-739-8000	PROFILE RETROFIT RENO-U-REDUCER ALUMN	BRUSHED ANT BRONZE ABGB	3/8" HT	GC	GC	#	TRANSITION AT CONCRETE TO RES FLOOR
	WALL COVER								
WC-1	FEATURE WALL MURAL	MAGIC MURALS DENISE STRICKLAND 919-205-1961	MOUNTAIN FOREST CANOPY BHUTAN	SET ON CLASS A VINYL	MUST VERIFY 94" H X 25'-0"	OWNER	GC	#	REVIEW CUSTOM SIZE WHEN ORDERING WILL REQUIRE WALL COVER INSTALLATION OVER MGYP SUSBSTRATE
	WALL PANEL								
WP-1	SERVICE AREA FRP WALL PANEL	MARLITE KAMCO SUPPLY 401-463-5266	STANDARD FRP SMOOTH FINISH	S-490N LIGHT GREY	4 X 8 X .09	GC	GC	#	ORDER SEAM COVERS / OUTSIDE AND INSIDE CORNER TRIM M350-M360-M370

ARCHITECT OF RECORD:

LDL STUDIO
ARCHITECT / HOSPITALITY DESIGNER

LDL STUDIO, INC.
106 Putnam Street
Providence, RI 02909
P: 401.274.4516
F. 401.421.2631
www.ldlstudio.com

Architect of Record: Gary M. Lepore, AIA

CERTIFICATION:

GARY M. LEPORE — No. 5,762 — REGISTERED ARCHITECT

CONSULTANTS:

M/E/P & FP ENGINEER:
HP ENGINEERING CONSULTING ENGINEERS, P.C.
15 MAIDEN LANE
NORTH HAVEN, CT
P: 203-239-9425
JOHN PHILLIPS, P.E.

STRUCTURAL ENGINEER:
AMP ENGINEERING INC.
82 SCENIC DRIVE
WEST WARWICK , RI 02893
P: 401.559.3659
ANTHONY ROTONDO, P.E.

OWNER:

ROGER WILLIAMS PARK ZOO

RHODE ISLAND ZOOLOGICAL ASSOC.
FOR THE ROGER WILLIAMS PARK ZOO

1000 ELMWOOD AVENUE
PROVIDENCE
RHODE ISLAND 02907

NUMBER	DATE	DESCRIPTION

REVISIONS:

PROJECT NAME:

RED PANDA EXHIBIT

RWPZ
1000 ELMWOOD AVENUE
PROVIDENCE
RHODE ISLAND 02907

SUBMISSION TYPE:
PERMIT SET

PROJECT TYPE:
NEW CONSTRUCTION

CLIENT NUMBER:
RWPZ 2022_01

ISSUE DATE: NOVEMBER 14, 2022

SHEET NAME:
MATERIAL SCHEDULE

DRAWING SCALE:

PROJECT NUMBER:
2022-03

DATE ISSUED:
11/14/2022

A9.00

© 2022 LDL STUDIO INC.

IF THIS SHEET IS NOT 24 X 36 IT IS A REDUCED SCALE PRINT - SCALE ACCORDINGLY

WWW. LDLSTUDIO.COM LDL STUDIO INC. - CELEBRATING 27 YEARS OF AWARD WINNING SERVICE 1995 - 2022 ARCHITECTS AIA 2030 CHALLENGE ADOPTER

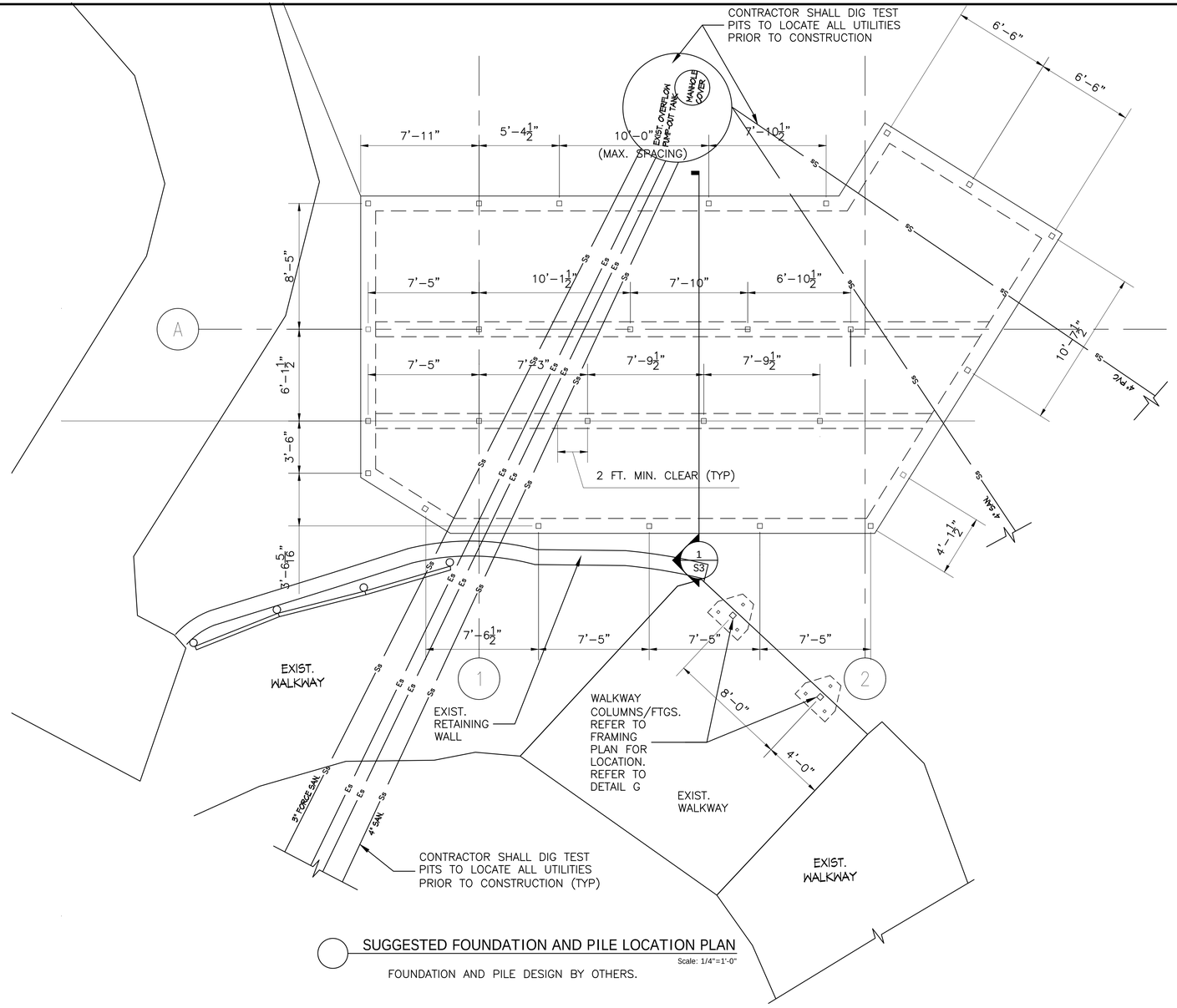

SUGGESTED FOUNDATION AND PILE LOCATION PLAN

Scale: 1/4"=1'-0"

FOUNDATION AND PILE DESIGN BY OTHERS.

GENERAL NOTES

1. ALL CONSTRUCTION SHALL BE IN ACCORDANCE WITH THE LATEST EDITION OF THE RHODE ISLAND STATE BUILDING CODE, INTERNATIONAL BUILDING CODE (IBC) AND THE NOTES INCLUDED HEREIN.
2. REFERENCE MECHANICAL, ARCHITECTURAL AND ELECTRICAL DRAWINGS FOR SIZES, AND LOCATIONS OF ALL OPENINGS AND LOCATIONS OF EMBEDDED ITEMS.
3. CONTRACTOR SHALL VERIFY ALL DIMENSIONS AND ELEVATIONS PRIOR TO ORDERING MATERIAL OR STARTING WORK.
4. INFORMATION CONCERNING EXISTING BUILDING CONDITIONS IS NOT PART OF THESE CONTRACT DOCUMENTS AND IS FURNISHED SOLELY FOR THE INFORMATION AND CONVENIENCE OF THE CONTRACTOR AND IS NOT GUARANTEED. THE CONTRACTOR SHALL CONDUCT THEIR OWN INDEPENDENT EXAMINATION OF SITE AND BUILDING CONDITIONS FOR THE PURPOSE OF BIDDING, FABRICATIONS AND CONSTRUCTION ASSOCIATED WITH THIS PROJECT. ANY RELIANCE UPON INFORMATION MADE AVAILABLE IN THESE DOCUMENTS SHALL BE AT THE CONTRACTOR'S RISK. THE ARCHITECT AND ENGINEER SHALL BE NOTIFIED OF ANY DISCREPANCIES.
5. THESE DRAWINGS REPRESENT THE COMPLETE AND FINAL STRUCTURE. ALL TEMPORARY BRACING AND SHORING REQUIRED TO MAINTAIN STRUCTURAL STABILITY DURING CONSTRUCTION IS THE RESPONSIBILITY OF THE CONTRACTOR.

DESIGN LOADS:

WIND VELOCITY = 135 mph
SNOW GROUND LOAD = 30 psf
WALKWAY LIVE LOAD = 100 psf
BUILDING LIVE LOAD = 50 psf

FOUNDATION NOTES:

1. REFER TO GEOTECHNICAL REPORT FOR EARTHWORK AND PILE DESIGN CRITERIA AND CONSTRUCTION SOIL DISTURBANCE MONITORING.
2. CONTRACTOR SHALL PROVIDE TEMPORARY SUPPORT OF EXCAVATION AS NECESSARY, DESIGNED BY A REGISTERED PROFESSIONAL, TO PROTECT ALL UTILITIES, RETAINING WALLS AND ALL OTHER EXISTING FEATURES DURING EXCAVATION, PILE INSTALLATION AND FOUNDATION CONSTRUCTION..
3. PILE ILLUSTRATIONS, INFORMATION AND LOADS SHOWN HEREIN ARE FOR ILLUSTRATIVE PROPOSES ONLY AND ARE NOT PART OF THESE CONSTRUCTION DOCUMENTS.
4. CONTRACTOR SHALL RETAIN THE SERVICES OF A RI PROFESSIONAL REGISTERED ENGINEER TO DESIGN THE FOUNDATION PILES. PILE INSTALLATION SHALL BE MONITORED AND TESTED BY A REGISTERED PROFESSIONAL ENGINEER. A MINIMUM OF ONE PILE LOAD TEST SHALL BE CONDUCTED.
5. CONTRACTOR SHALL LOCATE ALL UTILITIES, EXISTING STRUCTURE FOUNDATIONS AND ALL OTHER OBSTRUCTIONS PRIOR TO THE START OF DESIGN AND WORK.
6. CONTRACTOR SHALL CONDUCT AN EXISTING FACILITY SURVEY PRIOR TO THE START OF WORK AND PROVIDE A SOIL DISTURBANCE MONITORING PROGRAM DURING PILE DRIVING OPERATIONS. THE CONTRACTOR IS RESPONSIBLE FOR ANY DAMAGE TO EXISTING STRUCTURES AND UTILITIES CAUSED BY EARTHWORK, PILE INSTALLATION AND FOUNDATION CONSTRUCTION.

REINFORCED CONCRETE NOTES:

1. CONCRETE WORK SHALL BE IN ACCORDANCE WITH ACI 318 BUILDING CODE REQUIREMENTS FOR REINFORCED CONCRETE AND ACI 301 SPECIFICATIONS FOR STRUCTURAL CONCRETE FOR BUILDINGS.
2. ALL STRUCTURAL CONCRETE SHALL BE OF NORMAL WEIGHT AGGREGATE PROPORTIONED, MIXED AND PLACED IN ACCORDANCE WITH ACI 318 AND 301 AND HAVE A MINIMUM COMPRESSIVE STRENGTH AT 28 DAYS AS FOLLOWS:

   SLAB - 4000 PSI
3. CONCRETE EXPOSED TO WEATHER SHALL BE AIR-ENTRAINED.
4. REINFORCING STEEL SHALL CONFORM TO ASTM A-615, GRADE 60, EXCEPT STIRRUPS AND TIES SHALL BE GRADE 40 MINIMUM.
5. WELDED WIRE FABRIC SHALL BE PLACED AT TOP 1/3 OF SLAB EXCEPT WHERE SHOWN OTHERWISE. END LAP AND EDGE LAP SHALL BE 6 INCHES. WIRE FABRIC SHALL CONFORM TO ASTM DESIGNATION (A-185).
6. DETAILING OF CONCRETE REINFORCING AND ACCESSORIES SHALL BE IN ACCORDANCE WITH LATEST EDITION OF ACI PUBLICATION 315.
7. WHEN REINFORCEMENT IS LAP SPLICED, CLASS C SPLICES SHALL BE PROVIDED IN ACCORDANCE WITH ACI-318, UNLESS NOTED OTHERWISE.
8. MINIMUM CONCRETE COVER FOR REINFORCING STEEL SHALL BE AS FOLLOWS. (REFER TO ACI 318 FOR CONDITIONS NOT NOTED):

   BASE SLABS AND FOOTINGS.....2" TOP, 3" BOTTOM
9. ALL REINFORCING SHALL BE HELD RIGIDLY AND ACCURATELY IN PLACE. BARS TO BE SECURELY WIRE TIED TOGETHER AND PROTECTED AGAINST DISPLACEMENT BEFORE AND DURING PLACEMENT OF CONCRETE.
10. PROVIDE 3/4" CHAMFER ON ALL EXPOSED EDGES OF CONCRETE.
11. INTERIOR FLOOR SLABS SHALL RECEIVE A STEEL TROWEL FINISH. EXTERIOR SLABS AND SIDEWALKS SHALL RECEIVE A COARSE BROOM FINISH.

STRUCTURAL STEEL NOTES:

1. STEEL WORK SHALL BE IN ACCORDANCE WITH THE LATEST EDITION OF "AISC SPECIFICATIONS FOR DESIGN, FABRICATION, AND ERECTION OF STRUCTURAL STEEL FOR BUILDINGS.
2. ALL STEEL SHALL BE FABRICATED BY AN AISC CERTIFIED BUILDING FABRICATOR. ALL STEEL ERECTION SHALL BE PERFORMED BY AN AISC CERTIFIED BUILDING ERECTOR.
3. ALL STRUCTURAL STEEL SHALL ASTM A36 FOR ANGLES AND PLATES.
4. ALL STRUCTURAL TUBING SHALL CONFORM TO ASTM A-500 GRADE B.
5. ALL WELDING SHALL BE DONE IN ACCORDANCE WITH A.W.S. CODE D1.1, BY CERTIFIED WELDERS. WELDING ELECTRODES SHALL BE E70XX.
6. GROUT UNDER COLUMN BASE PLATES AND BEARING PLATES SHALL BE NON-SHRINK, NON-METALLIC GROUT WITH A MINIMUM COMPRESSIVE STRENGTH OF 5000 PSI AT 3 DAYS.
7. STRUCTURAL STEEL SHALL BE SHOP PRIMED AND PAINTED.
8. THE CONTRACTOR SHALL SUBMIT SHOP DRAWINGS STAMPED BY A RI REGISTERED PROFESSIONAL ENGINEER TO THE ENGINEER OF RECORD FOR REVIEW AND APPROVAL AND SHALL NOT START THE WORK UNTIL THE SHOP DRAWINGS HAVE BEEN REVIEWED AND APPROVED.
9. SUBMIT SHOP DRAWINGS PREPARED AND STAMPED BY A RI REGISTERED PROFESSIONAL ENGINEER FOR REVIEW PRIOR TO FABRICATION AND ERECTION.

TIMBER NOTES

1. ALL TIMBER WORK SHALL BE IN ACCORDANCE WITH THE NATIONAL FOREST PRODUCTS ASSOCIATION NATIONAL DESIGN SPECIFICATION (NDS) FOR WOOD CONSTRUCTION.
2. ALL TIMBER FRAMING SHALL HAVE THE FOLLOWING STRUCTURAL PROPERTIES UNLESS NOTED OTHERWISE:

   WALL STUDS - HEM-FIR No.1
   FLOOR JOISTS - HEM-FIR No.1
   ROOF RAFTERS - HEM-FIR No.1
3. ALL TIMBER SIZES ARE NOMINAL OTHERWISE NOTED.
4. ALL FASTENING SHALL BE IN ACCORDANCE WITH THE RHODE ISLAND STATE BUILDING CODE AND NDS UNLESS NOTED OTHERWISE.
5. ALL NOTED CONNECTORS ARE SIMPSON UNLESS NOTED OTHERWISE. INSTALL ALL FASTENERS ACCORDING TO THE MANUFACTURER'S SPECIFICATIONS.
6. ALL TIMBER EXPOSED TO WEATHER OR IN CONTACT WITH CONCRETE OR MASONRY SHALL BE TREATED WITH WOOD PRESERVATIVE.

TESTING AND INSPECTION:

THE OWNER/CONTRACTOR SHALL ENGAGE THE SERVICES OF A CERTIFIED INDEPENDENT TESTING AND INSPECTION AGENCY (INSPECTOR) TO PERFORM INSPECTION AND TESTING REQUIREMENTS ON THE FOLLOWING MATERIALS AND COMPONENTS:

PILE INSTALLATION AND SOIL DISTURBANCE MONITORING PROGRAM
EARTHWORK
CAST-IN-PLACE CONCRETE AND REINFORCING PLACEMENT

THESE TESTS AND INSPECTIONS ARE FOR QUALITY ASSURANCE AUDITS AND THEIR IMPLEMENTATION DOES NOT RELIEVE THE CONTRACTOR OF SUBCONTRACTORS OF THEIR RESPONSIBILITY FOR QUALITY CONTROL OF THEIR WORK.

ARCHITECT OF RECORD:
LDL STUDIO
ARCHITECT / HOSPITALITY DESIGNER
LDL STUDIO, INC.
106 Putnam Street
Providence, RI 02909
P: 401.274.4516
F. 401.421.2631
www.ldlstudio.com
Architect of Record: Gary M. Lepore, AIA

CERTIFICATION:
ANTHONY ROTONDO, JR.
No. 5327
12-5-22
REGISTERED PROFESSIONAL ENGINEER

CONSULTANTS:
M/E/P & FP ENGINEER:
HP ENGINEERING CONSULTING ENGINEERS, P.C.
15 MAIDEN LANE
NORTH HAVEN, CT
P: 203-239-9425
JOHN PHILLIPS, P.E.

STRUCTURAL ENGINEER:
AMR ENGINEERING INC.
82 SCENIC DRIVE
WEST WARWICK , RI 02893
P: 401.559.3659
ANTHONY ROTONDO, P.E.

OWNER:
ROGER WILLIAMS PARK ZOO
RHODE ISLAND ZOOLOGICAL ASSOC.
FOR THE ROGER WILLIAMS PARK ZOO
1000 ELMWOOD AVENUE
PROVIDENCE
RHODE ISLAND 02907

NUMBER	DATE	DESCRIPTION

REVISIONS:

PROJECT NAME:
RED PANDA EXHIBIT
RWPZ
1000 ELMWOOD AVENUE
PROVIDENCE
RHODE ISLAND 02907

SUBMISSION TYPE:
PERMIT SET

PROJECT TYPE:
NEW CONSTRUCTION

CLIENT NUMBER:
RWPZ 2022_01

ISSUE DATE: NOVEMBER 14, 2022

SHEET NAME:
FOUNDATION PLAN

DRAWING SCALE: AS NOTED
PROJECT NUMBER: 2022-03
DATE ISSUED: 11/14/2022

S1

© 2022 LDL STUDIO INC.

IF THIS SHEET IS NOT 24 X 36 IT IS A REDUCED SCALE PRINT - SCALE ACCORDINGLY
WWW. LDLSTUDIO. COM LDL STUDIO INC. - CELEBRATING 27 YEARS OF AWARD WINNING SERVICE 1995 - 2022 ARCHITECTS AIA 2030 CHALLENGE ADOPTER

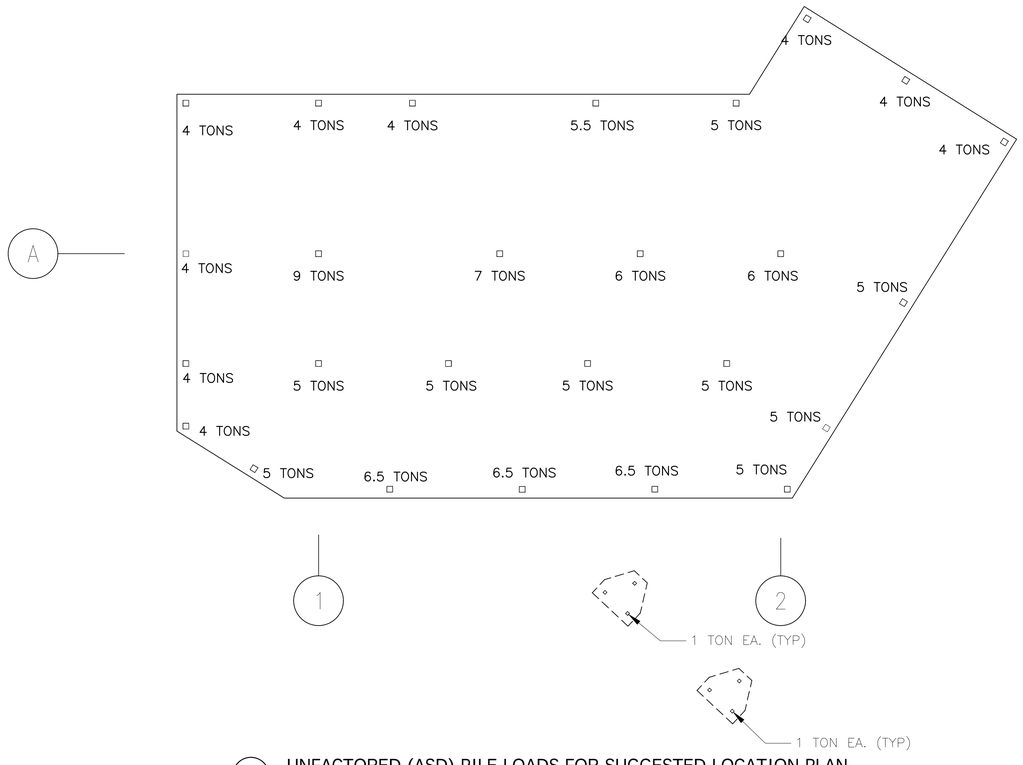

UNFACTORED (ASD) PILE LOADS FOR SUGGESTED LOCATION PLAN

Scale: 1/4"=1'-0"

FOUNDATION PILE DESIGN BY OTHERS.

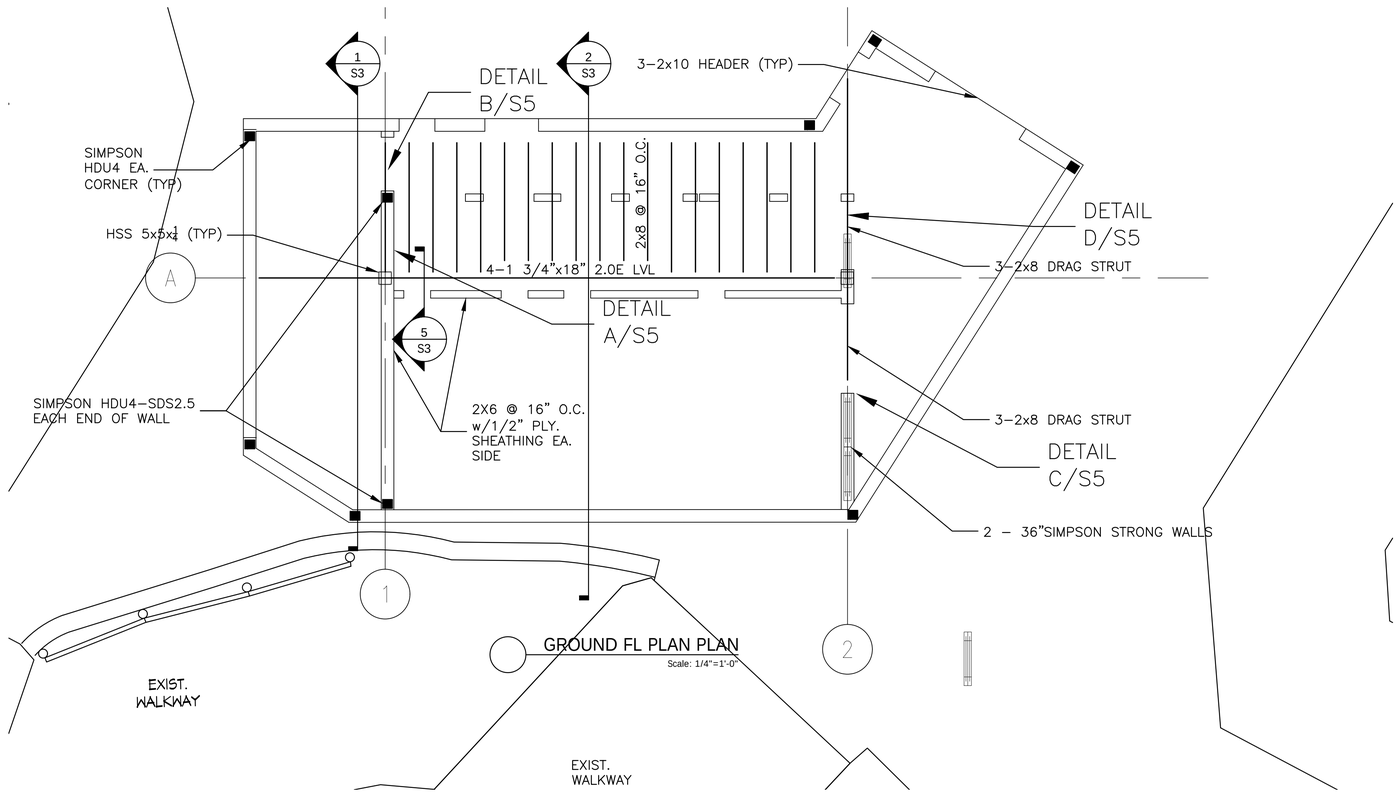

GROUND FL PLAN PLAN

Scale: 1/4"=1'-0"

IF THIS SHEET IS NOT 24 X 36 IT IS A REDUCED SCALE PRINT – SCALE ACCORDINGLY

WWW. LDLSTUDIO. COM LDL STUDIO INC. – CELEBRATING 27 YEARS OF AWARD WINNING SERVICE 1995 – 2022 AIA 2030 CHALLENGE ADOPTER ARCHITECTS

ARCHITECT OF RECORD:

LDL STUDIO

ARCHITECT / HOSPITALITY DESIGNER

LDL STUDIO, INC.
106 Putnam Street
Providence, RI 02909
P: 401.274.4516
F. 401.421.2631
www.ldlstudio.com

Architect of Record: Gary M. Lepore, AIA

CERTIFICATION:

ANTHONY ROTONDO, JR.
No. 5327
11-29-22
REGISTERED
PROFESSIONAL ENGINEER

CONSULTANTS:

M/E/P & FP ENGINEER:

HP ENGINEERING CONSULTING ENGINEERS, P.C.
15 MAIDEN LANE
NORTH HAVEN, CT
P: 203–239–9425
JOHN PHILLIPS, P.E.

STRUCTURAL ENGINEER:

AMR ENGINEERING INC.
82 SCENIC DRIVE
WEST WARWICK , RI 02893
P: 401.559.3659
ANTHONY ROTONDO, P.E.

OWNER:

ROGER WILLIAMS PARK ZOO

RHODE ISLAND ZOOLOGICAL ASSOC.
FOR THE ROGER WILLIAMS PARK ZOO

1000 ELMWOOD AVENUE
PROVIDENCE
RHODE ISLAND 02907

NUMBER	DATE	DESCRIPTION

REVISIONS:

PROJECT NAME:

RED PANDA EXHIBIT

RWPZ
1000 ELMWOOD AVENUE
PROVIDENCE
RHODE ISLAND 02907

SUBMISSION TYPE:
PERMIT SET

PROJECT TYPE:
NEW CONSTRUCTION

CLIENT NUMBER:
RWPZ 2022_01

ISSUE DATE: NOVEMBER 14, 2022

SHEET NAME:
FOUNDATION PLAN

DRAWING SCALE: AS NOTED

PROJECT NUMBER: 2022–03

DATE ISSUED: 11/14/2022

S2

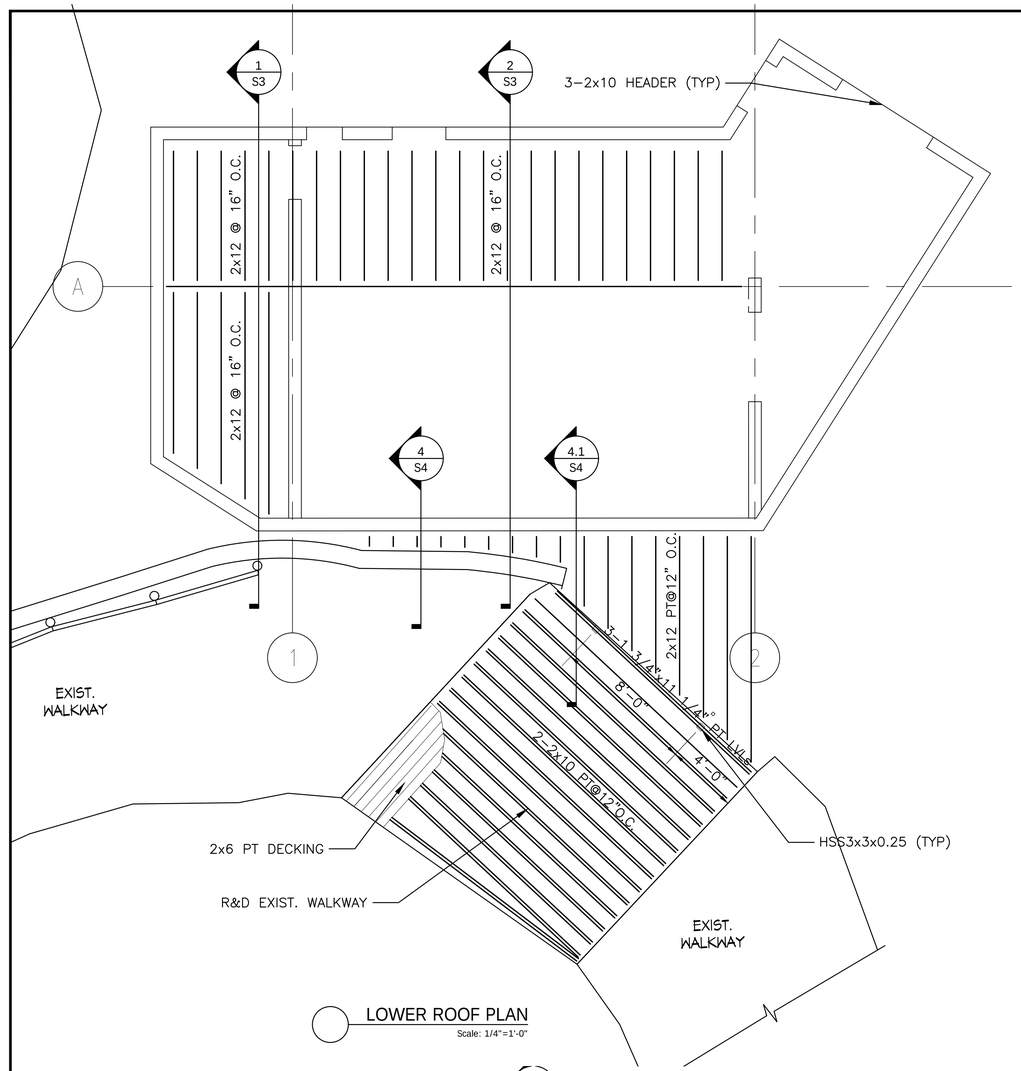

LOWER ROOF PLAN
Scale: 1/4"=1'-0"

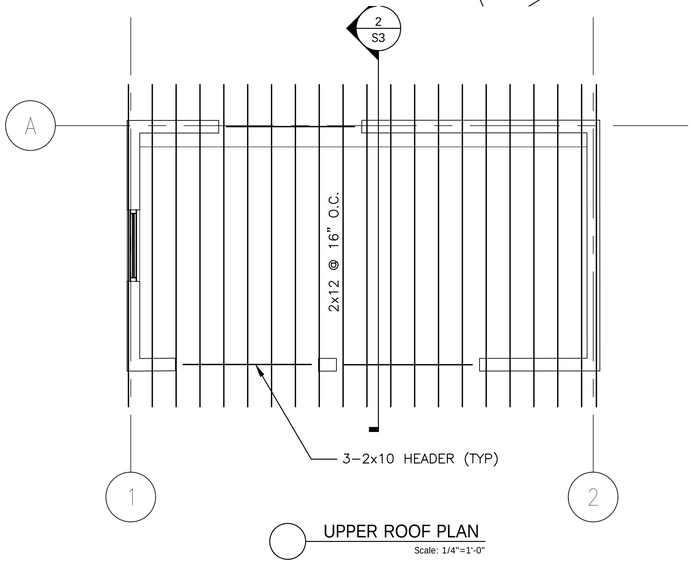

UPPER ROOF PLAN
Scale: 1/4"=1'-0"

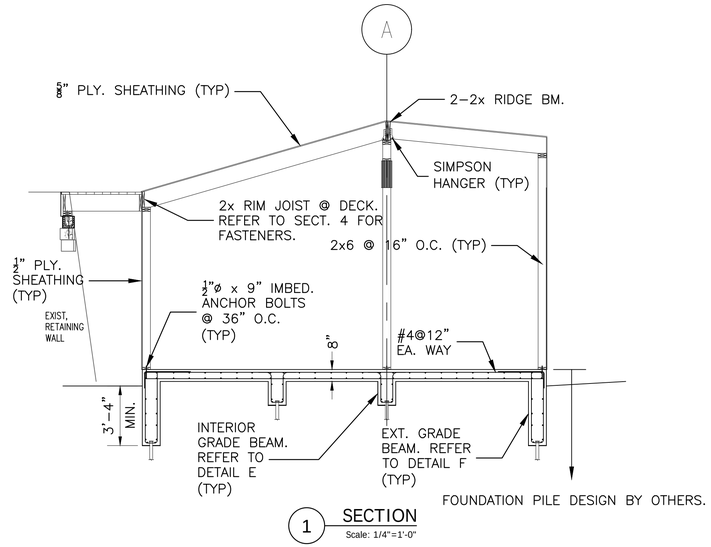

1 SECTION
Scale: 1/4"=1'-0"

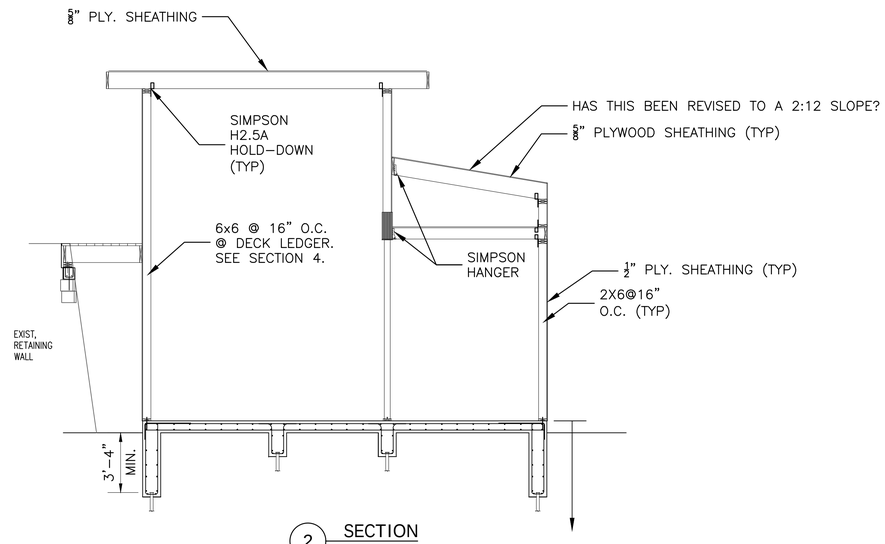

2 SECTION
Scale: 1/4"=1'-0"

FOUNDATION PILE DESIGN BY OTHERS.

IF THIS SHEET IS NOT 24 X 36 IT IS A REDUCED SCALE PRINT – SCALE ACCORDINGLY

WWW.LDLSTUDIO.COM LDL STUDIO INC. – CELEBRATING 27 YEARS OF AWARD WINNING SERVICE 1995 – 2022 ARCHITECTS AIA 2030 CHALLENGE ADOPTER

ARCHITECT OF RECORD:

LDL STUDIO
ARCHITECT / HOSPITALITY DESIGNER

LDL STUDIO, INC.
106 Putnam Street
Providence, RI 02909
P: 401.274.4516
F. 401.421.2631
www.ldlstudio.com

Architect of Record: Gary M. Lepore, AIA

CERTIFICATION:

ANTHONY ROTONDO, JR.
No. 5327
11-29-22
REGISTERED
PROFESSIONAL ENGINEER

CONSULTANTS:

M/E/P & FP ENGINEER:
HP ENGINEERING CONSULTING
ENGINEERS, P.C.
15 MAIDEN LANE
NORTH HAVEN, CT
P: 203–239–9425
JOHN PHILLIPS, P.E.

STRUCTURAL ENGINEER:
AMR ENGINEERING INC.
82 SCENIC DRIVE
WEST WARWICK , RI 02893
P: 401.559.3659
ANTHONY ROTONDO, P.E.

OWNER:

ROGER WILLIAMS PARK ZOO

RHODE ISLAND ZOOLOGICAL ASSOC.
FOR THE ROGER WILLIAMS PARK ZOO

1000 ELMWOOD AVENUE
PROVIDENCE
RHODE ISLAND 02907

NUMBER	DATE	DESCRIPTION

REVISIONS:

PROJECT NAME:

RED PANDA EXHIBIT

RWPZ
1000 ELMWOOD AVENUE
PROVIDENCE
RHODE ISLAND 02907

SUBMISSION TYPE:
PERMIT SET

PROJECT TYPE:
NEW CONSTRUCTION

CLIENT NUMBER:
RWPZ 2022_01

ISSUE DATE: NOVEMBER 14, 2022

SHEET NAME:
FOUNDATION PLAN

DRAWING SCALE: AS NOTED

PROJECT NUMBER: 2022–03

DATE ISSUED: 11/14/2022

S3

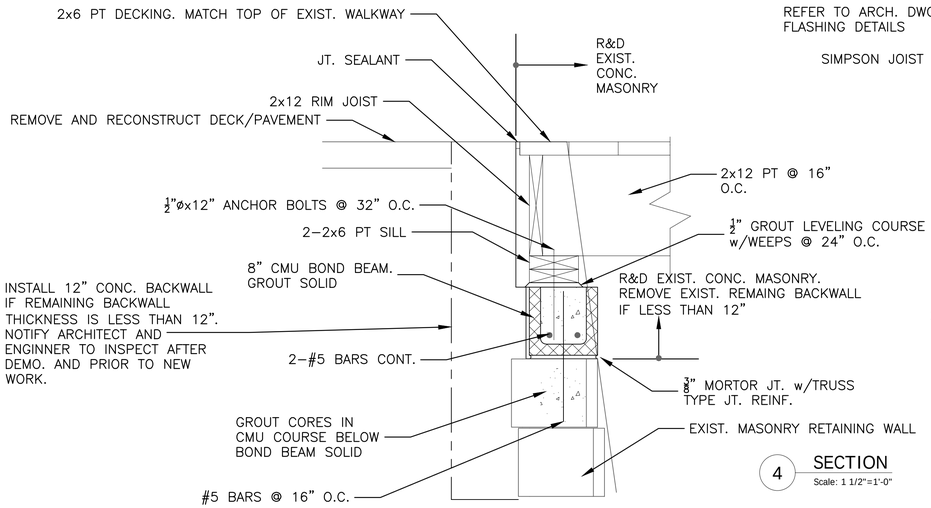

4 SECTION
Scale: 1 1/2"=1'-0"

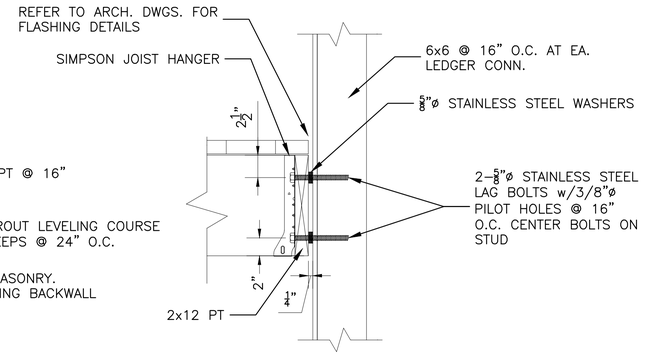

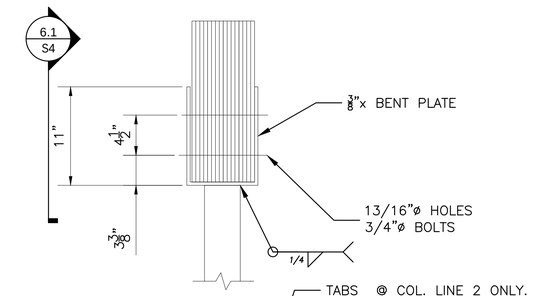

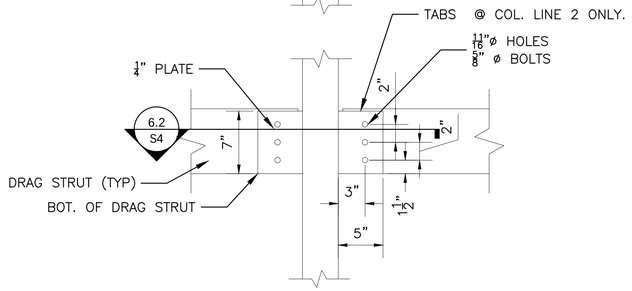

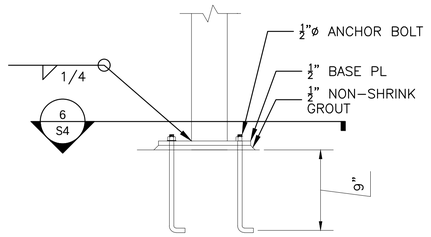

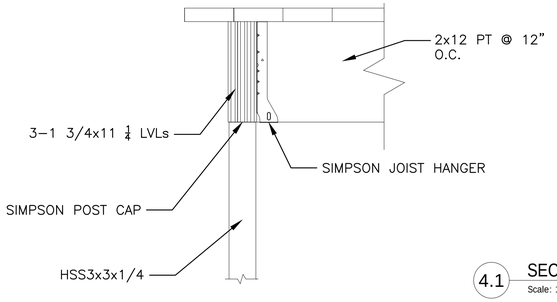

4.1 SECTION
Scale: 1 1/2"=1'-0"

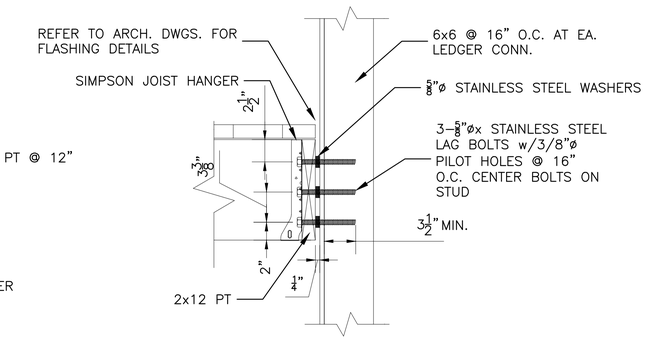

5 SECTION
Scale: 1 1/2"=1'-0"

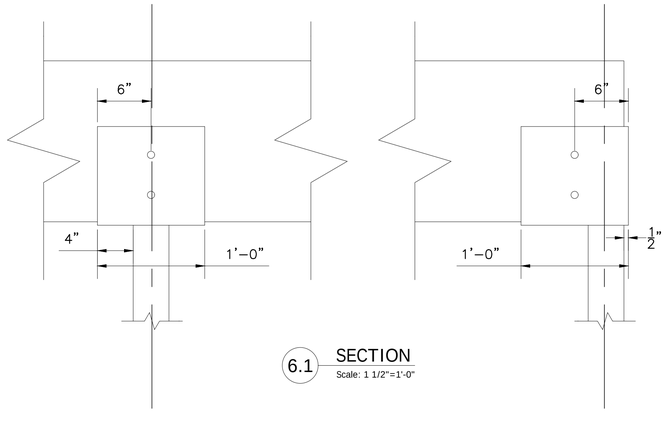

6.1 SECTION
Scale: 1 1/2"=1'-0"

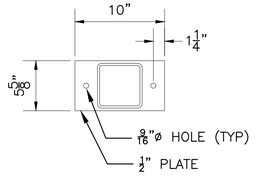

6 SECTION
Scale: 1 1/2"=1'-0"

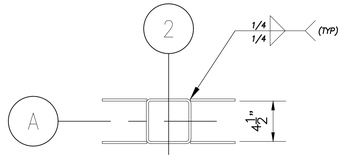

6.2 SECTION
Scale: 1 1/2"=1'-0"
@ COL. LINE 2 ONLY

ARCHITECT OF RECORD:
LDL STUDIO
ARCHITECT / HOSPITALITY DESIGNER
LDL STUDIO, INC.
106 Putnam Street
Providence, RI 02909
P: 401.274.4516
F. 401.421.2631
www.ldlstudio.com
Architect of Record: Gary M. Lepore, AIA

CERTIFICATION:
ANTHONY ROTONDO, JR.
No. 5327
11-29-22
REGISTERED PROFESSIONAL ENGINEER

CONSULTANTS:
M/E/P & FP ENGINEER:
HP ENGINEERING CONSULTING ENGINEERS, P.C.
15 MAIDEN LANE
NORTH HAVEN, CT
P: 203–239–9425
JOHN PHILLIPS, P.E.

STRUCTURAL ENGINEER:
AMR ENGINEERING INC.
82 SCENIC DRIVE
WEST WAIRWICK , RI 02893
P: 401.559.3659
ANTHONY ROTONDO, P.E.

OWNER:
ROGER WILLIAMS PARK ZOO
RHODE ISLAND ZOOLOGICAL ASSOC.
FOR THE ROGER WILLIAMS PARK ZOO
1000 ELMWOOD AVENUE
PROVIDENCE
RHODE ISLAND 02907

NUMBER	DATE	DESCRIPTION

REVISIONS:

PROJECT NAME:
RED PANDA EXHIBIT
RWPZ
1000 ELMWOOD AVENUE
PROVIDENCE
RHODE ISLAND 02907

SUBMISSION TYPE:
PERMIT SET

PROJECT TYPE:
NEW CONSTRUCTION

CLIENT NUMBER:
RWPZ 2022_01

ISSUE DATE: NOVEMBER 14, 2022

SHEET NAME:
FOUNDATION PLAN

DRAWING SCALE: AS NOTED
PROJECT NUMBER: 2022–03
DATE ISSUED: 11/14/2022

S4

IF THIS SHEET IS NOT 24 X 36 IT IS A REDUCED SCALE PRINT – SCALE ACCORDINGLY
WWW. LDLSTUDIO. COM LDL STUDIO INC. – CELEBRATING 27 YEARS OF AWARD WINNING SERVICE 1995 – 2022 ARCHITECTS AIA 2030 CHALLENGE ADOPTER

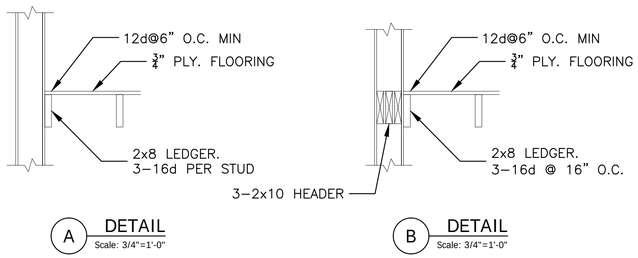

A DETAIL
Scale: 3/4"=1'-0"

B DETAIL
Scale: 3/4"=1'-0"

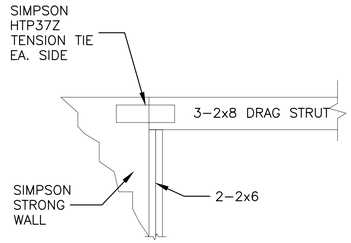

C DETAIL
Scale: 3/4"=1'-0"

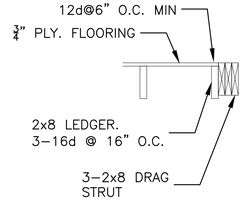

D DETAIL
Scale: 3/4"=1'-0"

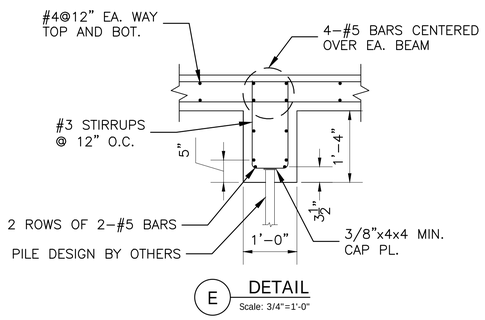

E DETAIL
Scale: 3/4"=1'-0"

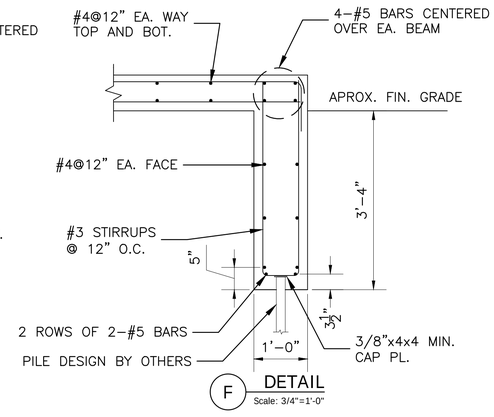

F DETAIL
Scale: 3/4"=1'-0"

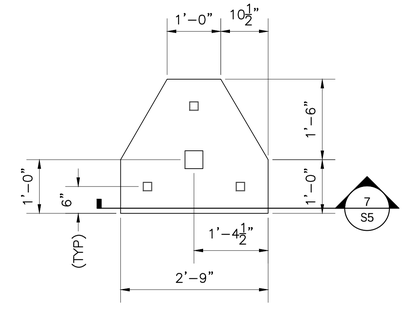

G DETAIL
Scale: 3/4"=1'-0"

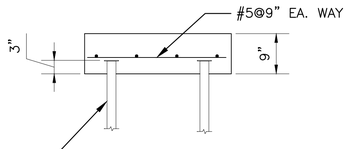

7 SECTION
Scale: 3/4"=1'-0"

IF THIS SHEET IS NOT 24 X 36 IT IS A REDUCED SCALE PRINT – SCALE ACCORDINGLY

AWARD WINNING SERVICE 1995 – 2022 ARCHITECTS AIA 2030 CHALLENGE ADOPTER

OF 27 YEARS CELEBRATING – INC. STUDIO LDL .COM WWW. LDLSTUDIO

ARCHITECT OF RECORD:

LDL STUDIO
ARCHITECT / HOSPITALITY DESIGNER

LDL STUDIO, INC.
106 Putnam Street
Providence, RI 02909
P: 401.274.4516
F. 401.421.2631
www.ldlstudio.com

Architect of Record: Gary M. Lepore, AIA

CERTIFICATION:

ANTHONY ROTONDO, JR.
No. 5327
11-29-22
REGISTERED
PROFESSIONAL ENGINEER

CONSULTANTS:

M/E/P & FP ENGINEER:
HP ENGINEERING CONSULTING ENGINEERS, P.C.
15 MAIDEN LANE
NORTH HAVEN, CT
P: 203–239–9425
JOHN PHILLIPS, P.E.

STRUCTURAL ENGINEER:
AMR ENGINEERING INC.
82 SCENIC DRIVE
WEST WAIRWICK , RI 02893
P: 401.559.3659
ANTHONY ROTONDO, P.E.

OWNER:

RHODE ISLAND ZOOLOGICAL ASSOC.
FOR THE ROGER WILLIAMS PARK ZOO

1000 ELMWOOD AVENUE
PROVIDENCE
RHODE ISLAND 02907

NUMBER	DATE	DESCRIPTION

REVISIONS:

PROJECT NAME:

RED PANDA EXHIBIT

RWPZ
1000 ELMWOOD AVENUE
PROVIDENCE
RHODE ISLAND 02907

SUBMISSION TYPE:
PERMIT SET

PROJECT TYPE:
NEW CONSTRUCTION

CLIENT NUMBER:
RWPZ 2022_01

ISSUE DATE: NOVEMBER 14, 2022

SHEET NAME:
FOUNDATION PLAN

DRAWING SCALE: AS NOTED

PROJECT NUMBER: 2022–03

DATE ISSUED: 11/14/2022

S5

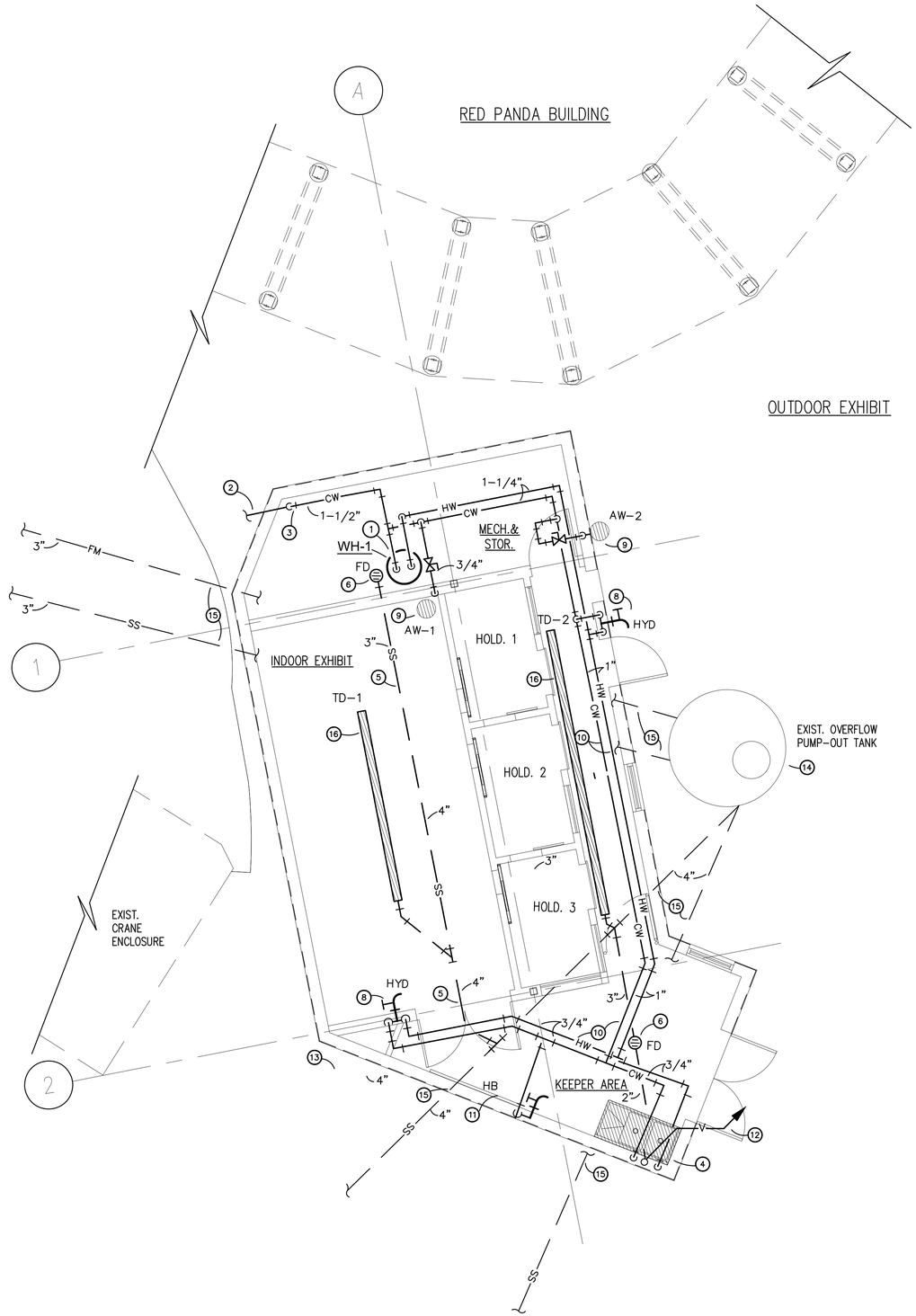

GROUND FLOOR PLUMBING PLAN

1/4" = 1'-0"

PLUMBING LEGEND:

CW	DOMESTIC COLD WATER PIPING
HW	DOMESTIC COLD WATER PIPING
SS	SANITARY SEWER PIPING
FM	FORCED MAIN PIPING
FCO	PIPING CLEANOUT
FD	FLOOR DRAIN
HYD	NON-FREEZE WALL HYDRANT
AW	ANIMAL WATERER
WH	ELECTRIC WATER HEATER

PLUMBING PLAN LEGEND:

1. FURNISH AND INSTALL NEW ELECTRIC WATER HEATER IN MECHANICAL CLOSET. REFER TO WATER HEATER PIPING DETAIL ON DWG RP-M3.
2. CONTRACTOR SHALL REMOVE EXISTING DOMESTIC WATER PIPING IN EXISTING RED PANDA BUILDING AND MODIFY SERVICE PIPING INSIDE NEW MECHANICAL ROOM AS REQUIRED.
3. FURNISH AND INSTALL NEW WATER SERVICE PIPING WITH BACKFLOW PREVENTER ASSEMBLY AND MAIN (BALL TYPE) SHUT-OFF VALVE.
4. FURNISH AND INSTALL NEW KEEPER'S UTILITY SINK WITH ASSOCIATED TRIM, PIPING TO/FROM AS SHOWN/AS REQUIRED.
5. FURNISH AND INSTALL NEW SANITARY SEWER PIPING BELOW FLOOR SLAB AS SHOWN/AS REQUIRED. - TYPICAL.
6. FURNISH AND INSTALL NEW FLOOR DRAIN CAST INTO FLOOR SLAB AND ASSOCIATED PIPING TO/FROM PER PIPING DETAIL AS SHOWN/AS REQUIRED - TYPICAL.
7. FURNISH AND INSTALL NEW PIPING CLEANOUT CAST INTO FLOOR SLAB AND ASSOCIATED PIPING TO/FROM AS SHOWN/AS REQUIRED.
8. FURNISH AND INSTALL NEW TEMPERED WATER, NON-FREEZE HYDRANT WITH PIPING TO/FROM AS SHOWN/AS REQUIRED AT 24" AFF.
9. FURNISH AND INSTALL NEW ANIMAL WATERER (WALL MOUNTED) WITH PIPING INCLUDING WATER FILTER PER MANUFACTURER'S INSTALLATION INSTRUCTIONS.
10. FURNISH AND INSTALL NEW DOMESTIC WATER PIPING CONCEALED ABOVE CEILING AS SHOWN/AS REQUIRED.
11. FURNISH AND INSTALL NEW INTERIOR HOSE BIBB AT 24" AFF.
12. FURNISH AND INSTALL NEW SANITARY VENT PIPING CONCEALED IN WALL, OFFSET AND RISE UP THRU ROOF BOOT.
13. FURNISH AND INSTALL NEW UNDERGROUND SANITARY SEWER PIPING - EXTEND AND CONNECT TO EXISTING SEWER PIPING (FIELD VERIFY LOCATION) AS REQUIRED.
14. CONTRACTOR SHALL FIELD VERIFY LOCATION OF EXISTING UNDERGROUND UTILITIES (SEWER PIPING, FORCE MAIN PIPING, ELECTRICAL CONDUIT) IN VICINITY OF NEW RED PANDA STRUCTURE SERVING PUMP STATION IN SERVICE ROAD. UNDERGROUND UTILITIES (TO REMAIN) SHALL BE PROPERLY PROTECTED FROM ANY DAMAGE CAUSED BY DEMOLITION OR NEW CONSTRUCTION.
15. EXISTING UNDERGROUND SANITARY WASTE AND FORCED MAIN PIPING TO/FROM PUMP OUT TANK EXTENDING BELOW NEW EXHIBIT STRUCTURE SHALL INCLUDE PROTECTIVE SLEEVES THROUGH NEW FOUNDATION WALLS.
16. FURNISH AND INSTALL NEW TRENCH DRAIN CAST INTO FLOOR SLAB AND ASSOCIATED PIPING TO/FROM AS SHOWN/AS REQUIRED.

0' 4' 8'

SCALE: 1/4" = 1'-0"

© 2022 LDL STUDIO INC.

ARCHITECT OF RECORD:
LDL STUDIO
ARCHITECT / HOSPITALITY DESIGNER
LDL STUDIO, INC.
106 Putnam Street
Providence, RI 02909
P: 401.274.4516
F. 401.421.2631
www.ldlstudio.com
Architect of Record: Gary M. Lepore, AIA

CERTIFICATION:

CONSULTANTS:
M/E/P & FP ENGINEER:
HP ENGINEERING CONSULTING ENGINEERS, P.C.
15 MAIDEN LANE
NORTH HAVEN, CT
P: 203-239-9425
JOHN PHILLIPS, P.E.

STRUCTURAL ENGINEER:
AMR ENGINEERING INC.
82 SCENIC DRIVE
WEST WARWICK , RI 02893
P: 401.559.3659
ANTHONY ROTONDO, P.E.

OWNER:
ROGER WILLIAMS PARK ZOO
1000 ELMWOOD AVENUE
PROVIDENCE
RHODE ISLAND 02907

NUMBER	DATE	DESCRIPTION

REVISIONS:

PROJECT NAME:
RED PANDA EXHIBIT

RWPZ
1000 ELMWOOD AVENUE
PROVIDENCE
RHODE ISLAND 02907

SUBMISSION TYPE:
PERMIT SET

PROJECT TYPE:
NEW CONSTRUCTION

CLIENT NUMBER:

ISSUE DATE: NOVEMBER 14, 2022

SHEET NAME:
RED PANDA ENCLOSURE PLUMBING PLAN

DRAWING SCALE:

PROJECT NUMBER: 2022-03

DATE ISSUED: 11/14/2022

RP-M1

IF THIS SHEET IS NOT 24 X 36 IT IS A REDUCED SCALE PRINT - SCALE ACCORDINGLY
LDL STUDIO INC. - 2022 ARCHITECTS AIA 2030 CHALLENGE ADOPTER
WWW.LDLSTUDIO.COM CELEBRATING 27 YEARS OF AWARD WINNING SERVICE 1995 -
P:\22020\RPM1.dwg, 11/16/2022 10:58:30 AM, Adobe PDFa.pc3

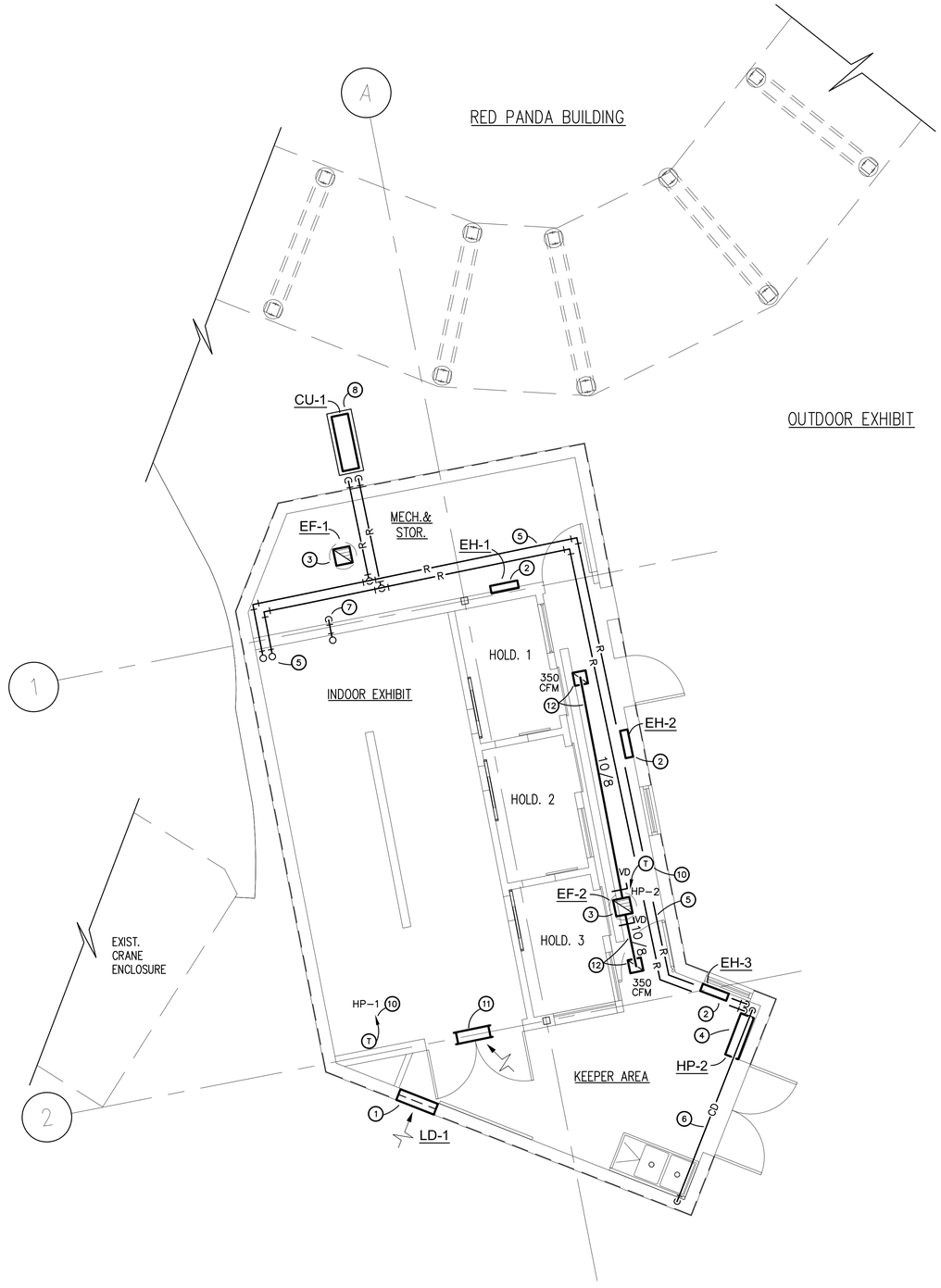

GROUND FLOOR HVAC PLAN

1/4" = 1'-0"

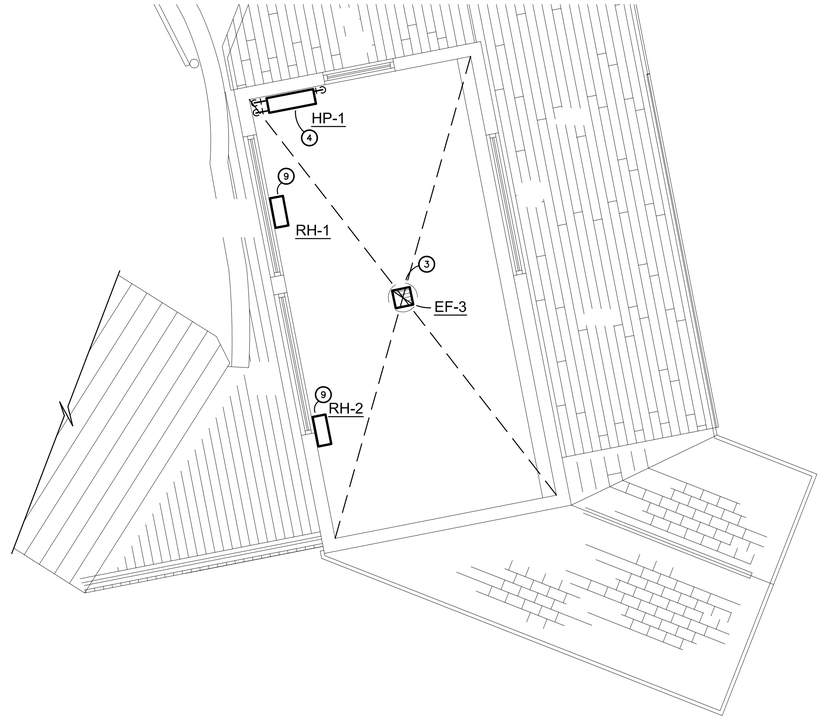

UPPER FLOOR HVAC PLAN

1/4" = 1'-0"

HVAC LEGEND:

R	REFRIGERANT PIPING
CD	CONDENSATE DRAIN PIPING
	RIGID ALUMINUM DUCTWORK
EF	ROOF MOUNTED EXHAUST FAN
CU	OUTDOOR CONDENSING UNIT
HP	HIGH WALL HEAT PUMP
RH	RADIANT HEATER
LD	OUTDOOR AIR INTAKE LOUVER WITH DAMPER
	EXHAUST AIR GRILLE
T	WALL-MOUNTED THERMOSTAT
VD	AIR VOLUME DAMPER

HVAC PLAN LEGEND:

1. FURNISH AND INSTALL NEW OUTSIDE AIR INTAKE LOUVER WITH MOTOR OPERATED (24V) DAMPER (NORM. CLOSED). INTERLOCK DAMPER OPERATION WITH EXHAUST FANS EF-2 & EF-3. 24" AFF MOUNTING HEIGHT.
2. FURNISH AND INSTALL NEW ELECTRIC WALL HEATER AT 18" AFF.
3. FURNISH AND INSTALL NEW ROOF MOUNTED EXHAUST FAN WITH ROOF CURB ON ROOF ABOVE - TYPICAL.
4. FURNISH AND INSTALL NEW WALL MOUNTED HEAT PUMP WITH CONDENSATE PUMP MOUNTED BELOW UNIT AT 8'-0" AFF.
5. FURNISH AND INSTALL NEW REFRIGERANT PIPING TO/FROM UNIT CONCEALED IN ENCLOSURE. REFER TO SYSTEM PIPING DIAGRAM ON DWG RP-M3.
6. FURNISH AND INSTALL NEW CONDENSATE DISCHARGE PIPING FROM UNIT PUMP, RUN IN ENCLOSURE AND DISCHARGE TO INDIRECT WASTE CONNECTION BELOW SINK AS SHOWN/AS REQUIRED.
7. FURNISH AND INSTALL NEW CONDENSATE DISCHARGE PIPING FROM UNIT PUMP, RUN IN ENCLOSURE AND DISCHARGE TO FUNNEL FLOOR DRAIN AS SHOWN/AS REQUIRED.
8. FURNISH AND INSTALL NEW CONDENSING UNIT MOUNTED WITH 18" HIGH STEEL STAND ON 4" HIGH CONCRETE PAD.
9. FURNISH AND INSTALL NEW WALL MOUNTED INFRARED RADIANT HEATER AT 10-0" AFF (BELOW WINDOW).
10. FURNISH AND INSTALL NEW WALL MOUNTED T'STAT FOR HEAT PUMP CONTROL.
11. FURNISH AND INSTALL NEW WALL MOUNTED TRANSFER AIR GRILLES 8'-0" AFF.
12. FURNISH AND INSTALL NEW CEILING MOUNTED EXHAUST GRILLE WITH DUCTWORK RUN BACK TO EXHAUST RISER.

0' 4' 8'

SCALE: 1/4" = 1'-0"

© 2022 LDL STUDIO INC.

ARCHITECT OF RECORD:
LDL STUDIO
ARCHITECT / HOSPITALITY DESIGNER
LDL STUDIO, INC.
106 Putnam Street
Providence, RI 02909
P: 401.274.4516
F. 401.421.2631
www.ldlstudio.com
Architect of Record: Gary M. Lepore, AIA

CERTIFICATION:

CONSULTANTS:

M/E/P & FP ENGINEER:
HP ENGINEERING CONSULTING ENGINEERS, P.C.
15 MAIDEN LANE
NORTH HAVEN, CT
P: 203-239-9425
JOHN PHILLIPS, P.E.

STRUCTURAL ENGINEER:
AMR ENGINEERING INC.
82 SCENIC DRIVE
WEST WARWICK , RI 02893
P: 401.559.3659
ANTHONY ROTONDO, P.E.

OWNER:
ROGER WILLIAMS PARK ZOO
1000 ELMWOOD AVENUE
PROVIDENCE
RHODE ISLAND 02907

NUMBER	DATE	DESCRIPTION

REVISIONS:

PROJECT NAME:
RED PANDA EXHIBIT
RWPZ
1000 ELMWOOD AVENUE
PROVIDENCE
RHODE ISLAND 02907

SUBMISSION TYPE:
PERMIT SET

PROJECT TYPE:
NEW CONSTRUCTION

CLIENT NUMBER:

ISSUE DATE: NOVEMBER 14, 2022

SHEET NAME:
RED PANDA ENCLOSURE HVAC PLAN

DRAWING SCALE:

PROJECT NUMBER: 2022-03

DATE ISSUED: 11/14/2022

RP-M2

IF THIS SHEET IS NOT 24 X 36 IT IS A REDUCED SCALE PRINT - SCALE ACCORDINGLY
LDL STUDIO INC. - CELEBRATING 27 YEARS OF AWARD WINNING SERVICE 1995 - 2022 ARCHITECTS AIA 2030 CHALLENGE ADOPTER
WWW.LDLSTUDIO.COM

P:\22020\RPM2.dwg, 11/16/2022 10:59:31 AM, Adobe PDFa.pc3

HEAT PUMP UNIT SCHEDULE

NO.	SYSTEM	UNIT TYPE	TOT. COOL MBH	SENS. COOL MBH	HEAT MBH	MAX. CFM	ELEC.	MFG. & MODEL NO.
HP-1	CU-1	WALL MOUNT	17.7	15.6	21.6	646	208V-1ø	MITSUBISHI TRANE #TPKFYP018LM140A
HP-2	CU-1	WALL MOUNT	17.7	15.6	21.6	646	208V-1ø	MITSUBISHI TRANE #TPKFYP018LM140A

NOTES:

1. PROVIDE WALL MOUNT UNITS WITH ASPEN MINI WHITE CONDENSATE PUMP MOUNTED TO BASE OF UNIT.
2. PROVIDE ALL UNITS WITH WALL MOUNTED CONTROLLER.

AIR COOLED CONDENSING UNIT SCHEDULE

NO.	SERVING	REFRIG.	DESIGN CONDITIONS SUMMER DB	SUMMER WB	WINTER DB	WINTER WB	COOLING MBH	HEATING MBH	ELEC.	MFG. & MODEL NO.
CU-1	EXHIBIT & HOLDING AREAS	R-410A	95	75	3	2	36	45	208V-1ø	MITSUBISHI TRANE #NTXMPH36A142AA

NOTES:

1. PROVIDE ALL UNITS WITH "QUICK-SLING" 18" HIGH MOUNTING STAND.

FAN SCHEDULE

NO.	TYPE	CFM	S.P.	HP/WATTS	VOLTAGE	DRIVE	TYPE	RPM	MFG. & MODEL NO.
EF-1	EXHAUST	250	.125"	1/20	120V-1ø	DIRECT	ROOF	1550	LOREN COOK #70C15DH
EF-2	EXHAUST	900	.125"	1/4	120V-1ø	DIRECT	ROOF	1550	LOREN COOK #120C15D
EF-3	EXHAUST	700	.25"	1/8	120V-1ø	DIRECT	ROOF	1550	LOREN COOK #100C15DH

NOTES:

1. FURNISH ALL NEW FANS WITH UNIT-MOUNTED, PRE-WIRED DISCONNECT SWITCHES, GRAVITY-TYPE BACKDRAFT DAMPERS, BIRD SCREENS, AND PREFABRICATED ROOF CURB.
2. DIRECT DRIVE FANS SHALL BE FURNISHED WITH ELECTRONIC VARIABLE SPEED SWITCH.
3. INTERLOCK FAN CONTROL OPERATION WITH OUTDOOR AIR INTAKE LOUVER DAMPER.

ELECTRIC WALL HEATER SCHEDULE

NO.	WATTS	BTU	VOLTAGE	TYPE	MFG. & MODEL NO.
EH-1	3000/1500	10,235/5120	208V-1ø	ARCHITECTURAL	BERKO #FRC-4024
EH-2	3000/1500	10,235/5120	208V-1ø	ARCHITECTURAL	BERKO #FRC-4024
EH-3	3000/1500	10,235/5120	208V-1ø	ARCHITECTURAL	BERKO #FRC-4024

NOTES:

1. FURNISH WITH SURFACE MOUNTING BOX FOR WALL INSTALLATION.
2. FURNISH WITH UNIT-MOUNTED THERMOSTAT AND DISCONNECT SWITCH.
3. ENCLOSURE SHALL HAVE BAKED ENAMEL FINISH (COLOR BY OWNER).

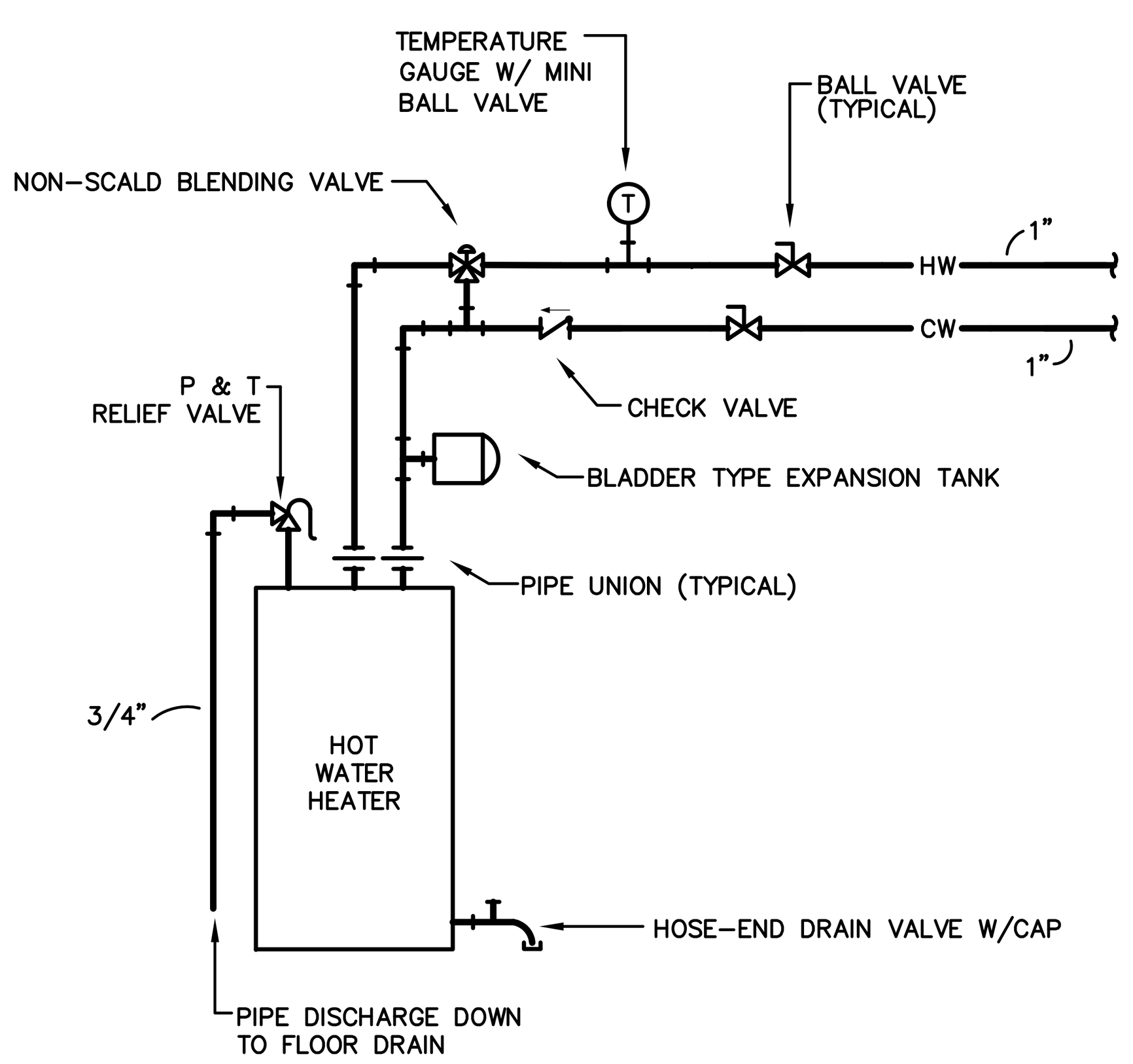

WATER HEATER PIPING

NOT TO SCALE

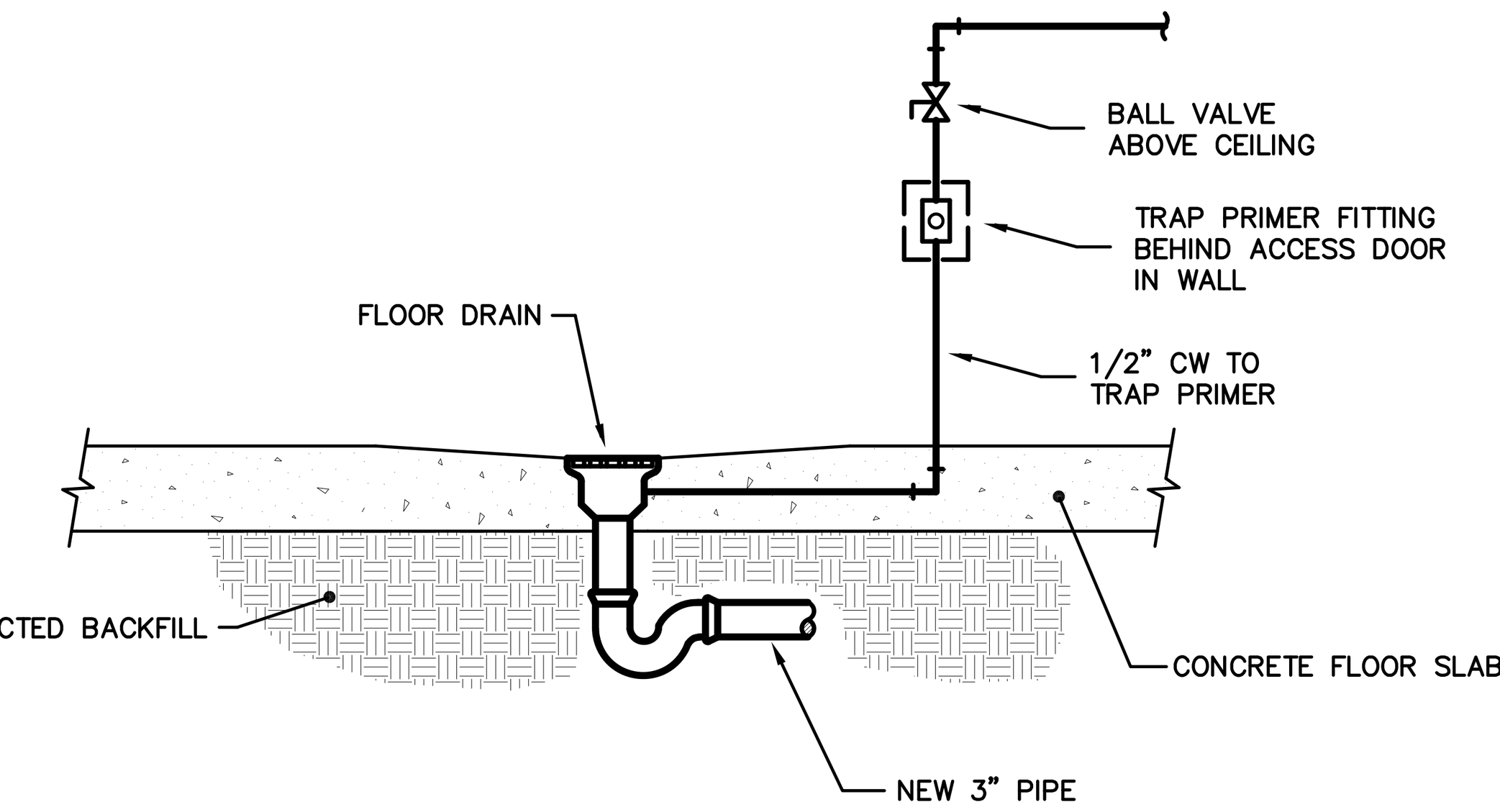

TYPICAL NEW FLOOR DRAIN INSTALLATION

NOT TO SCALE

DIAGRAM SYMBOL LEGEND	
DISPLAY	DESCRIPTION
—///—	POWER WIRE
———	CONTROL WIRE
— —	REF. PIPE

PIPING AND CONTROLS		
SYMBOL	BRANCH PIPE MODEL NAME	
J1	CMY-Y62-G-E	
SYMBOL	LIQUID PIPE/GAS PIPE SIZE	
P1	3/8	/ 5/8
P2	1/4	/ 1/2
SYMBOL	MODEL NUMBER	
MA	TAR-40MAAU	

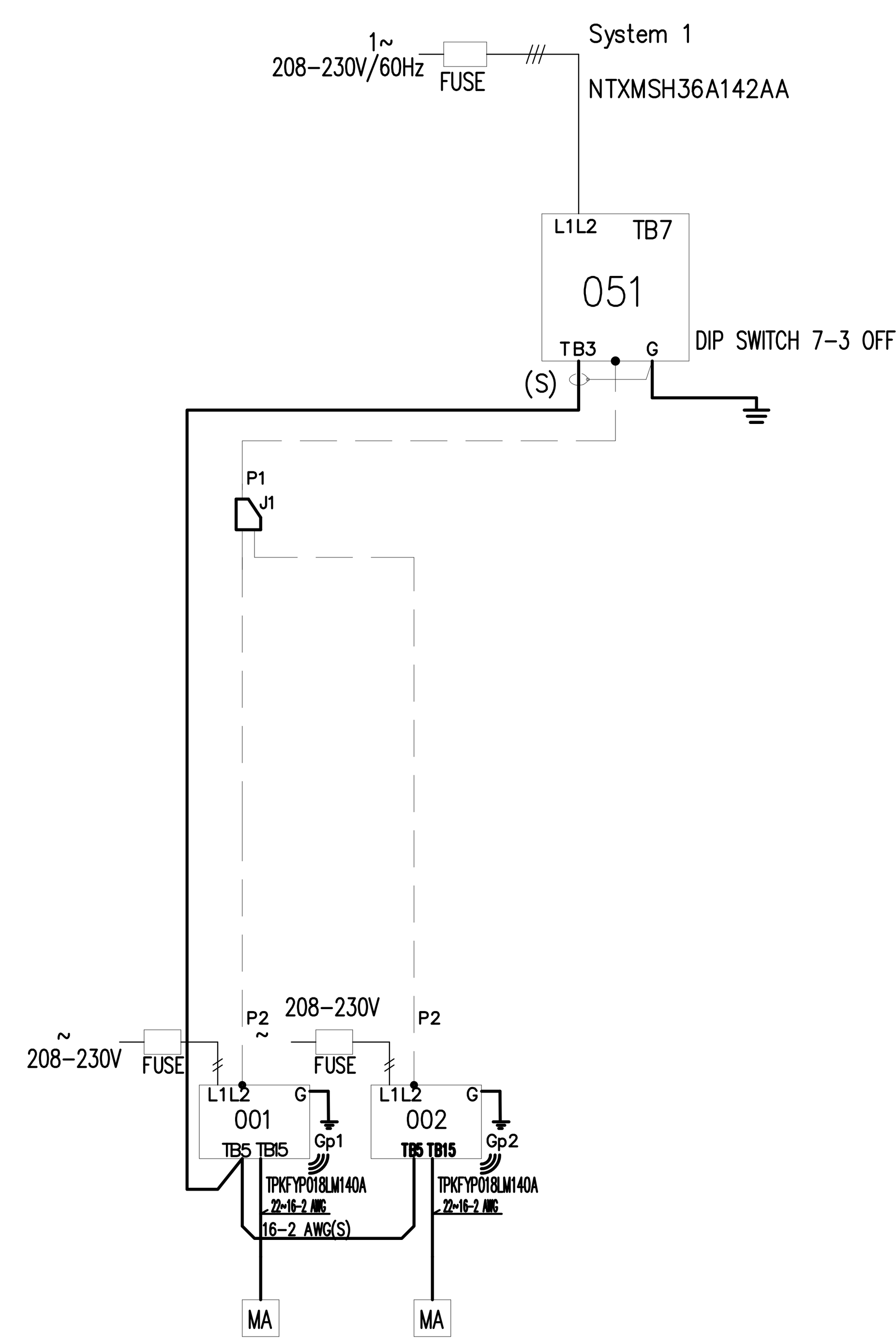

This drawing is schematic in nature. Final routing of piping & wiring shall be determined by the installing contractor and/or designer of record

Additional refrigerant charge is needed depending on the size and length of extended piping. Please refer the amount of pre-charge and the formula of calculation which is mentioned on the data book.

1.25mm²(16 AWG) : 1.25mm²(16 AWG) or more. 0.75mm²(20 AWG) : between 0.5mm²(24 AWG) and 0.75mm²(20 AWG).

HEAT PUMP SYSTEM SCHEMATIC DIAGRAM

NOT TO SCALE

GENERAL NOTES:

1. THE BUILDING WILL REMAIN OPERATIONAL THROUGH THE COURSE OF THE CONSTRUCTION PROJECT. THE CONTRACTOR SHALL MAKE EVERY EFFORT TO MINIMIZE DISRUPTIONS TO THE NORMAL DAY-TO-DAY OPERATIONS OF THE BUILDING DURING THE COURSE OF THE CONSTRUCTION PROJECT.
2. CONTRACTOR SHALL VISIT THE SITE PRIOR TO SUBMITTING HIS BID FOR THE CONSTRUCTION WORK TO BECOME FULLY AWARE OF ALL EXISTING CONDITIONS THAT COULD AFFECT THE CONTRACTOR'S ABILITY TO COMPLETE HIS WORK.
3. CONTRACTOR SHALL BE RESPONSIBLE FOR ALL PIPING SHUTDOWNS, DRAINING OF PIPING SYSTEMS, REFILLING, TESTING, ETC., OF EXISTING PIPING SYSTEMS AS REQUIRED TO MAKE NEW PIPING CONNECTIONS TO EXISTING SYSTEMS, PIPING SHUTDOWNS SHALL BE SCHEDULED THROUGH OWNER'S REPRESENTATIVE.
4. CONTRACTOR SHALL BE RESPONSIBLE FOR CONFIRMING SIZE AND EXACT LOCATIONS OF EXISTING PIPING, ETC., PRIOR TO COMMENCING WITH CONSTRUCTION.
5. CONTRACTOR SHALL BE RESPONSIBLE FOR ALL CUTTING AND PATCHING REQUIRED TO COMPLETE HIS WORK.
6. ALL MECHANICAL WORK COMPLETED ON THIS PROJECT SHALL BE DONE IN STRICT COMPLIANCE WITH THE ROGER WILLIAMS PARK ZOO STANDARDS FOR EQUIPMENT, MATERIALS, AND INSTALLATION PROCEDURES FOR ELECTRICAL CONSTRUCTION PROJECTS. ALL CONSTRUCTION PROCEDURES SHALL BE DONE IN STRICT COMPLIANCE WITH THE ROGER WILLIAMS PARK ZOO FACILITIES, FIRE, SAFETY, ANIMAL HANDLERS AND SECURITY DEPARTMENTS.
7. ALL NEW WORK SHALL BE HUNG AND BRACED FOR SEISMIC REQUIREMENTS IN STRICT CONFORMANCE WITH APPLICABLE SECTIONS OF INTERNATIONAL BUILDING CODE (LATEST APPLICABLE EDITION).
8. FURNISH AND INSTALL ANY/ALL AUXILIARY STEEL REQUIRED FOR HANGING AND SUPPORTING NEW EQUIPMENT, DUCTWORK, PIPING, ETC. ALL NEW AUXILIARY STEEL SHALL BE PAINTED (TWO COATS OF ALKYD ENAMEL TO MATCH ADJACENT SURFACES).
9. MECHANICAL CONTRACTOR SHALL COORDINATE LOCATIONS, DIMENSIONS, ELEVATIONS, ETC., OF NEW EQUIPMENT, DUCTWORK, PIPING, ETC., WITH OTHER TRADES.
10. CONTRACTOR SHALL MAKE ANY/ALL REQUIRED OFFSETS IN NEW PIPING, DUCTWORK, ETC., TO CLEAR EXISTING OBSTRUCTIONS OR TO MEET FIELD CONDITIONS.
11. CONTRACTOR SHALL MAKE EVERY POSSIBLE EFFORT TO KEEP CONSTRUCTION AREA CLEAN AT ALL TIMES AND TO MINIMIZE CONSTRUCTION DIRT AND DUST.
12. AT CONCLUSION OF CONSTRUCTION, CONTRACTOR SHALL TEST SYSTEMS (WITNESSED BY OWNER'S REPRESENTATIVE) AND MAKE NECESSARY ADJUSTMENTS TO SYSTEMS TO INSURE THEY ARE OPERATING PROPERLY.
13. PITCH ALL NEW PIPING DOWN IN THE DIRECTION OF FLOW.
14. FURNISH/INSTALL DIELECTRIC PIPE UNIONS IN PIPING SYSTEMS BETWEEN PIPING OF DISSIMILAR METALS.
15. FURNISH/INSTALL ESCUTCHEON PLATES ON ALL EXPOSED PIPING PENETRATIONS THROUGH FLOORS, CEILINGS, WALLS, ETC.
16. CONTRACTOR SHALL BE RESPONSIBLE FOR ALL FEES, INCLUDING BUT NOT LIMITED TO: PERMITS, TESTING, UTILITY COMPANY COSTS, ETC.
17. ANY DEVIATIONS FROM THESE PLANS AND SPECS SHALL BE REQUESTED IN WRITING BY THE CONTRACTOR AND REQUIRE A WRITTEN APPROVAL FROM THE ENGINEER.
18. THE CONTRACTOR SHALL BE RESPONSIBLE FOR MAINTAINING A RECORD SET OF "AS-BUILT" DRAWINGS TO BE TURNED OVER TO THE OWNER'S REPRESENTATIVE AT THE COMPLETION OF THE PROJECT. THE INFORMATION MUST INCLUDE ANY VARIATIONS MADE, LOCATIONS OF EQUIPMENT, ROUTING OF NEW PIPING AND DUCTWORK, CHANGES TO ANY MODEL NUMBERS OF THE SPECIFIED ITEMS AND ANY OTHER INFORMATION THAT VARIES FROM THE PLANS.
19. THE CONTRACTOR SHALL BE RESPONSIBLE FOR ALL RIGGING OF NEW EQUIPMENT AS REQUIRED TO COMPLETE THE PROJECT. CONTRACTOR SHALL COORDINATE RIGGING WITH OWNER'S REPRESENTATIVE.
20. ALL NEW PIPING, DUCTWORK, ETC., SHALL BE INSTALLED PLUMB AND PARALLEL WITH WALLS AND CEILINGS TO PRESENT A NEAT AND WORKMANLIKE APPEARANCE.
21. CONTRACTOR SHALL PROVIDE PROOF OF LIABILITY AND PROPERTY INSURANCE TO THE OWNER. ALL DEDUCTIBLES SHALL BE PAID FOR BY THE CONTRACTOR IN THE EVENT OF A CLAIM. INSURANCE CERTIFICATES SHALL BE FURNISHED TO OWNER PRIOR TO CONTRACTOR COMMENCING WITH CONSTRUCTION.
22. CONTRACTOR SHALL WARRANT AND GUARANTEE ALL WORK AND MATERIALS FOR A PERIOD OF ONE YEAR FROM THE FINAL ACCEPTANCE BY THE OWNER.
23. CONTRACTOR SHALL SUBMIT EIGHT (8) COMPLETE SETS OF SHOP DRAWINGS OF ALL NEW EQUIPMENT, MATERIALS, ETC., PROPOSED TO BE UTILIZED ON THIS PROJECT. SUBMIT SHOP DRAWINGS IN SINGLE BOUND PACKAGE FOR APPROVAL BY THE ENGINEER PRIOR TO COMMENCING WITH CONSTRUCTION.
24. AT THE CONCLUSION OF CONSTRUCTION, THE CONTRACTOR SHALL PROVIDE A MINIMUM 4 HOURS OF INSTRUCTION TO OWNER'S REPRESENTATIVES TO DEMONSTRATE OPERATION OF NEW SYSTEMS AND EQUIPMENT.
25. AT THE CONCLUSION OF CONSTRUCTION, THE CONTRACTOR SHALL PROVIDE THE OWNER WITH THREE (3) BOUND COPIES OF OPERATING AND MAINTENANCE MANUALS CONTAINING MAINTENANCE INFORMATION, PARTS NUMBERS, ETC., FOR ALL NEW EQUIPMENT.
26. WHERE PRODUCT NAMES ARE SPECIFIED ON THESE CONTRACT BID DOCUMENTS, THE CONTRACTOR MAY ELECT TO SUBSTITUTE AN EQUAL PRODUCT FOR REVIEW/APPROVAL BY THE ENGINEER/OWNER'S REPRESENTATIVE. IT IS UP TO THE ENGINEER/OWNER'S REPRESENTATIVE TO QUALIFY IF THE SUBSTITUTED PRODUCT IS AN APPROVED EQUAL.
27. CONTRACTOR SHALL FURNISH AND INSTALL SUITABLE ACCESS TO ALL VALVES, DAMPERS, CONTROL COMPONENTS, ETC., INCLUDING 12 X 12" ACCESS DOORS IN INACCESSIBLE CONSTRUCTION SUCH AS DRYWALL.
28. DO NOT SCALE DRAWINGS FOR DIMENSIONAL PURPOSES. DRAWINGS ARE DIAGRAMMATIC, CONTRACTOR SHALL DETERMINE ALL PERTINENT DIMENSIONING IN FIELD. SHOULD DIMENSIONAL QUESTIONS AND/OR ERRORS ARISE, PLEASE CONSULT ENGINEER FOR CLARIFICATIONS PRIOR TO COMMENCING WITH CONSTRUCTION.

MECHANICAL SPECIFICATIONS:

1. CONTRACTOR SHALL PROVIDE ALL MATERIALS, EQUIPMENT, LABOR, ETC., REQUIRED TO COMPLETE THE MECHANICAL WORK AS OUTLINED ON CONTRACT DRAWINGS. ALL WORK SHALL BE DONE IN ACCORDANCE WITH ALL APPLICABLE NATIONAL, STATE, AND LOCAL CODES (LATEST RECOGNIZED EDITIONS).
2. PIPING:
   a. DOMESTIC HOT AND COLD WATER PIPING: SHALL BE TYPE "L" HARD DRAWN COPPER TUBING, ASTM B88 WITH VIEGA "PROPRESS" JOINTS OR VIEGA "PROPRESS" FITTINGS WITH MECHANICAL JOINTS.
   b. WASTE AND VENT PIPING: SHALL BE Sch. 40 PVC PIPE, ASTM F1488, WITH DRAINAGE PATTERN FITTINGS WITH SOLVENT-WELD SOCKET JOINTS.
   c. REFRIGERANT PIPING: SHALL BE TYPE "ACR", ASTM B280, PRE-WASHED HARD DRAWN COPPER TUBING WITH SWEAT TYPE WROUGHT COPPER FITTINGS UTILIZING BRAZED SILVER SOLDER JOINTS.
   d. CONDENSATE DRAIN PIPING: SHALL BE SAME AS DOMESTIC WATER PIPING.
3. PIPE INSULATION: SHALL BE PREFORMED FIBERGLASS PIPE INSULATION WITH INTEGRAL ALL SERVICE (ASJ) VAPOR BARRIER JACKET AND PVC FITTING JACKETS. INSULATION SHALL BE OF THE FOLLOWING THICKNESS:

PIPING TYPE	*THICKNESS*
DOMESTIC COLD WATER	1/2"
DOMESTIC HOT WATER	1/2"
CONDENSATE DRAIN	1/2"
REFRIGERANT	1/2"

4. VALVES: ALL NEW VALVES SHALL BE 200 POUND RATED (OWG). CAST BRONZE COMPOSITION CONSTRUCTION, WITH SCREW OR SWEAT CONNECTION ENDS FOR PIPING UP TO 2-1/2" SIZE, VALVES FOR SIZE 3" AND ABOVE SHALL BE CAST IRON GATE VALVES WITH FLANGED END CONNECTIONS.
5. PIPE TESTING: UPON COMPLETION OF PIPING INSTALLATION, ALL PIPING SHALL BE THOROUGHLY FLUSHED OF ALL DIRT AND FOREIGN MATTER. PIPING SHALL THEN BE HYDROSTATICALLY TESTED AT 100 PSIG FOR TWO HOURS. TEST SHALL BE WITNESSED BY OWNER'S REPRESENTATIVE. CONTRACTOR SHALL PROVIDE ALL MATERIALS, EQUIPMENT, ETC., REQUIRED TO PERFORM TESTS.
6. FLOOR DRAINS: SHALL BE JOSAM SERIES 30000, COATED 2-PIECE CAST IRON CONSTRUCTION, BOTTOM OUTLET, ADJUSTABLE 6" SQUARE NIKALOY STRAINER TOP, AND 1/2" PRIMER TAP CONNECTION.
7. WALL HYDRANT: SHALL BE PRIER MODEL P-754, NON-FREEZE TYPE, COMMERCIAL HOT & COLD WALL HYDRANT WITH INTEGRAL VACUUM BREAKER/DOUBLE BACKFLOW PREVENTER, 3/4" HOSE CONNECTION, FLUSH-MOUNT HYDRANT BOX AND REMOVABLE KEY OPERATOR.
8. KEEPERS SINK: SHALL BE REGENCY MODEL No. 600S218241GRT STAINLESS STEEL TWO COMPARTMENT SINK WITH RIGHT DRAINBOARD, TWIST HANDLE WASTE VALVE, 3-1/2" BASKET DRAIN OUTLET, AND WATERLOO MODEL No. 750PRWL812 1.15 GPM LOW PROFILE WALL-MOUNTED PRE-RINSE FAUCET WITH 8" CENTERS AND 12" ADD-ON FAUCET.
9. DOMESTIC HOT WATER HEATER: SHALL BE A.O. SMITH MODEL NO. ENT-30 ELECTRIC, 30 GALLON STORAGE, 21 GPH RECOVERY AT 90 DEGREE RISE, COMPLETE WITH UNIT MOUNTED CONTROLS. DUAL 4500 WATT ELEMENTS, 208 VOLT -SINGLE PHASE.
10. INFRARED RADIANT HEATER (RH-1&2): SHALL BE RE-VERBER-RAY MODEL ELX-46B1-208 HOUSING WITH EL-MW-B46 ELEMENT, 2 KW HEATING CAPACITY, 208 VOLT/1/60 ELECTRICAL, COMPLETE WITH HEATER CONTROL, ELEMENT WIRE GUARD, ADJUSTABLE WALL MOUNTING BRACKET AND OCCUPANCY SENSOR.
11. PIPE ENCLOSURE: SHALL BE "LINE HIDE" LINESET COVER SYSTEM PVC CONSTRUCTION COVERS WITH SNAP-ON JOINTS, SIZED TO ENCLOSE REFRIGERANT PIPING, CONDENSATE DRAIN, AND POWER WIRING.
12. LOUVER (LD): SHALL BE RUSKIN MODEL NO. ELF375DX STATIONARY LOUVER, DRAINABLE, EXTRUDED ALUMINUM, 4" DEEP, 30"x30" SIZE, WITH INSECT SCREEN.
13. EXHAUST/TRANSFER GRILLE: SHALL BE TITUS MODEL NO. 350FL EXTRUDED ALUMINUM, 10"x10" SIZE EXHAUST GRILLES, 24"x14" TRANSFER GRILLES.
14. ANIMAL WATERER: SHALL BE NELSON 700 SERIES AUTOMATIC WATERERS. AW-1 SHALL BE MODEL NO. 730-10 WALL MOUNT AT 30" AFF. AW-2 SHALL BE SAME AS AW-2 EXCEPT FURNISHED WITH ELECTRIC HEATER FOR EXTERIOR INSTALLATION.
15. TRENCH DRAIN: SHALL BE WATTS DEAD LEVEL DX PRE-SLOPED TRENCH DRAIN SYSTEM, 6" WIDE x 12'-0" LONG (TR-1), 6" WIDE x 18'-0" LONG (TR-2), PAW-PROOF POLYPROPYLENE SLOTTED GRATE, FRAME AND FRAME GUARD.

PLUMBING GENERAL NOTES:

1. ENTIRE PLUMBING SYSTEM SHALL BE INSTALLED IN ACCORDANCE WITH ALL APPLICABLE STATE AND LOCAL CODES.
2. CHECK/VERIFY ALL DIMENSIONS WITH ARCHITECTURAL PLANS AND FIELD MEASUREMENTS PRIOR TO INSTALLING ROUGH PIPING.
3. FURNISH AND INSTALL DIELECTRIC UNIONS IN PIPING SYSTEM BETWEEN PIPING OF DISSIMILAR METALS.
4. FURNISH AND INSTALL ESCUTCHEON PLATES ON ALL EXPOSED PIPING PENETRATIONS THROUGH FLOORS, CEILINGS, WALLS, ETC.
5. FURNISH AND INSTALL ISOLATION VALVES ON DOMESTIC COLD WATER AND HOT WATER PIPING CONNECTIONS TO ALL FIXTURES AND EQUIPMENT (ANGLE TYPE VALVES ON PLUMBING FIXTURES AND BALL TYPE VALVES ON EQUIPMENT).
6. CONTRACTOR SHALL FLUSH AND SANITIZE ALL DOMESTIC COLD WATER AND HOT WATER PIPING PER STANDARDS SET FORTH BY LOCAL HYDRAULIC COMPANY.
7. FIELD VERIFY EXACT LOCATIONS AND SIZES OF EXISTING PIPING WHERE NEW PIPING CONNECTIONS ARE TO BE MADE.
8. ALL PIPE HANGERS UTILIZED FOR HANGING INSULATED PIPING SHALL HAVE GALVANIZED INSULATION SHIELDS. ALL INSULATION SHIELDS SHALL BE TACK-WELDED TO PIPE HANGERS.
9. CONTRACTOR SHALL SAFE-OFF ALL NEW PIPING PENETRATIONS THROUGH FIRE-RATED WALLS AND FLOORS WITH APPROVED FIRE CAULK AS REQUIRED TO MAINTAIN FIRE INTEGRITY OF SAME.

ARCHITECT OF RECORD:
LDL STUDIO
ARCHITECT / HOSPITALITY DESIGNER
LDL STUDIO, INC.
106 Putnam Street
Providence, RI 02909
P: 401.274.4516
F. 401.421.2631
www.ldlstudio.com
Architect of Record: Gary M. Lepore, AIA

CERTIFICATION:

CONSULTANTS:
M/E/P & FP ENGINEER:
HP ENGINEERING CONSULTING ENGINEERS, P.C.
15 MAIDEN LANE
NORTH HAVEN, CT
P: 203-239-9425
JOHN PHILLIPS, P.E.
STRUCTURAL ENGINEER:
AMR ENGINEERING INC.
82 SCENIC DRIVE
WEST WARWICK , RI 02893
P: 401.559.3659
ANTHONY ROTONDO, P.E.

OWNER:
ROGER WILLIAMS PARK ZOO
1000 ELMWOOD AVENUE
PROVIDENCE
RHODE ISLAND 02907

NUMBER	DATE	DESCRIPTION

REVISIONS:

PROJECT NAME:
RED PANDA EXHIBIT
RWPZ
1000 ELMWOOD AVENUE
PROVIDENCE
RHODE ISLAND 02907

SUBMISSION TYPE: PERMIT SET

PROJECT TYPE: NEW CONSTRUCTION

CLIENT NUMBER:

ISSUE DATE: NOVEMBER 14, 2022

SHEET NAME: RED PANDA ENCLOSURE MECHANICAL SPECIFICATIONS

DRAWING SCALE:

PROJECT NUMBER: 2022-03

DATE ISSUED: 11/14/2022

RP-M3

© 2022 LDL STUDIO INC.
LDL STUDIO INC. - CELEBRATING 27 YEARS OF AWARD WINNING SERVICE 1995 - 2022 ARCHITECTS AIA 2030 CHALLENGE ADOPTER
WWW. LDLSTUDIO. COM
IF THIS SHEET IS NOT 24 X 36 IT IS A REDUCED SCALE PRINT - SCALE ACCORDINGLY

IF THIS SHEET IS NOT 24 X 36 IT IS A REDUCED SCALE PRINT – SCALE ACCORDINGLY
LDL STUDIO INC. – CELEBRATING 27 YEARS OF AWARD WINNING SERVICE 1995 – 2022 ARCHITECTS AIA 2030 CHALLENGE ADOPTER
WWW.LDLSTUDIO.COM

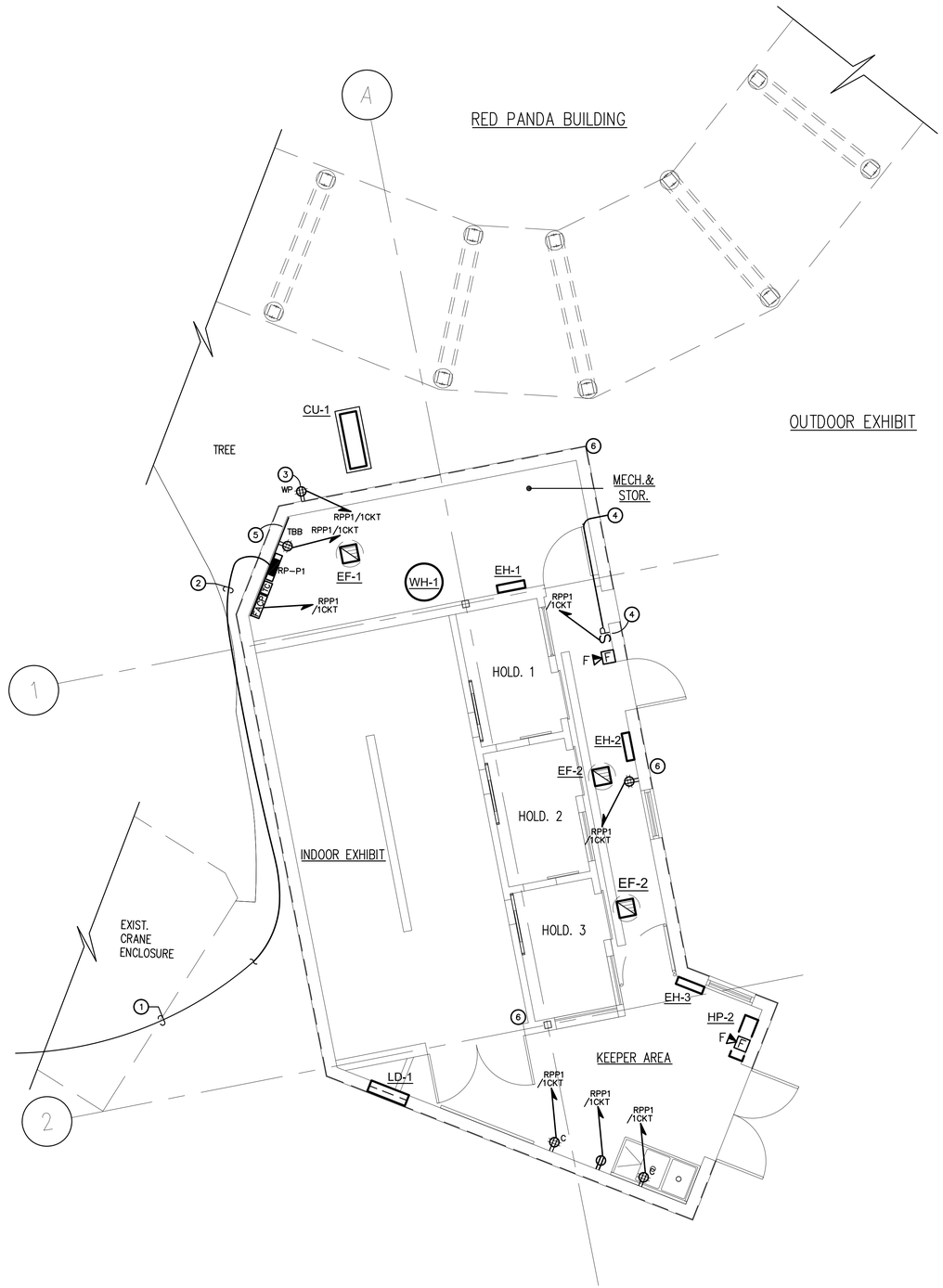

GROUND FLOOR ELECTRICAL PLAN

1/4" = 1'-0"

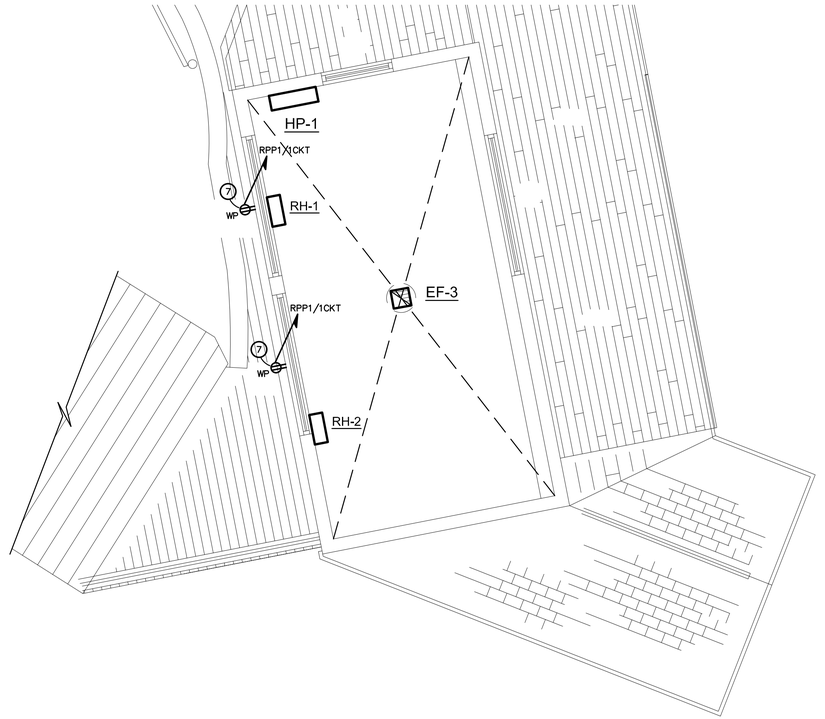

UPPER FLOOR ELECTRICAL PLAN

1/4" = 1'-0"

LOWER LEVEL ELECTRICAL PLAN LEGEND

1. THE ELECTRICAL CONTRACTOR SHALL DISCONNECT AND REMOVE THE EXISTING CONDUCTORS CONSISTING OF 2 # 10, 1 # 10 GROUND IN EXISTING BURIED 1" SCHEDULE 40 PVC CONDUIT PRESENTLY SERVING THE RED PANDA ENCLOSURE AND SHALL FURNISH AND INSTALL 4 # 6, 1 # 10 GROUND IN THE EXISTING/EXTENDED 1" SCHEDULE 40 PVC CONDUIT.
2. THE ELECTRICAL CONTRACTOR SHALL EXTEND 1" SCHEDULE 40 PVC FEEDER CONDUIT BELOW GRADE TO NEW PANEL RP–P1 COMPLETE WITH CONTINUATION OF 4 # 6, 1 # 10 GROUND FEEDER CONDUCTORS AS INDICATED/AS REQUIRED – MINIMUM BURIAL DEPTH 24" – REFER TO ELECTRICAL RISER DIAGRAMS AND PANELBOARD SCHEDULES FOR ADDITIONAL INFORMATION.
3. THE ELECTRICAL CONTRACTOR SHALL FURNISH AND INSTALL NEW DEDICATED EXTERIOR GFCI PROTECTED QUADRAPLEX (DOUBLE DUPLEX) RECEPTACLE WITH EXTERIOR GRADE 2–GANG IN–USE ALUMINUM COVER EQUAL TO TAYMAC MODEL # MX6200 FOR POWERING OWNER FURNISHED ELECTRIC FENCING AND NEW NEMA 4X, IP67 RATED UV–STABILIZED POLYCARBONATE RESIN ENCLOSURE WITH CLEAR POLYCARBONATE DOOR EQUAL TO BUD INDUSTRIES MODEL # PTQ–11076–C FOR HOUSING ELECTRIC FENCE CONTROLLER – COORDINATE INSTALLATION OF ELECTRIC FENCING SYSTEM WITH OWNERS ELECTRIC FENCING INSTALLER.
4. THE ELECTRICAL CONTRACTOR SHALL FURNISH AND INSTALL NEW DEDICATED EXTERIOR GFCI PROTECTED BRANCH CIRCUIT CONSISTING OF 2 # 12, 1 # 12 GROUND IN 1" SCHEDULE 40 PVC CONDUIT TO SERVE NEW EXTERIOR 250 WATT, 120 VOLT WATER BOWL HEATER – THE ELECTRICAL CONTRACTOR SHALL COORDINATE WITH WATER BOWL HEATER INSTALLER AND SHALL WIRE PER MANUFACTURERS DIRECTION – CONTROL WATER BOWL HEATER VIA NEW MOTOR RATED SINGLE POLE SWITCH WITH PILOT LIGHT MOUNTED INSIDE BUILDING ADJACENT TO DOOR LEADING TO THE OUTDOOR EXHIBIT AREA.
5. THE ELECTRICAL CONTRACTOR SHALL FURNISH AND INSTALL 3/4" FIRE RATED TELEPHONE BACK BOARD "TBB" (PAINTED GRAY) RUN FROM 6" A.F.F. TO CEILING FOR MOUNTING OF OWNER FURNISHED EQUIPMENT.
6. THE ELECTRICAL CONTRACTOR SHALL FURNISH AND INSTALL CAST ALUMINUM SURFACE MOUNTED BACK–BOX AND WEATHER–TIGHT BLANK COVER WITH 3/4" CONDUIT WITH METERED NYLON PULL CORD RUN FROM BOX LOCATION TO TELEPHONE BACK BOARD LOCATED ADJACENT TO THE ELECTRICAL PANEL FOR USE IN WIRING OWNER FURNISHED MONITORING CAMERAS – FURNISH AND INSTALL ANY/ALL MOUNTING HARDWARE AND ACCESSORIES AS REQUIRED FOR A COMPLETE INSTALLATION – VERIFY FIANL MOUNTING LOCATION WITH OWNERS REPRESENTATIVE PRIOR TO INSTALLATION.
7. THE ELECTRICAL CONTRACTOR SHALL FURNISH AND INSTALL NEW DEDICATED EXTERIOR GFCI PROTECTED DUPLEX RECEPTACLE MOUNTED ABOVE WINDOWS WITH EXTERIOR GRADE SINGLE–GANG IN–USE ALUMINUM COVER EQUAL TO TAYMAC MODEL # MX3200 FOR POWERING FUTURE OWNER FURNISHED ELECTRIC INRARED HEATERS.

RECEPTACLE NOTE:

ALL RECEPTACLES WITHIN PROJECT SCOPE AREA SHALL BE TAMPER AND WEATHER RESISTANT GFCI PROTECTED TYPE EQUAL TO PASS & SEYMOUR MODEL # 2097TRWRNAGRY WITH CAST ALUMINUM SURFACE MOUNTED BACK–BOX AND WEATHER–TIGHT IN–USE COVER

0' 4' 8'

SCALE: 1/4" = 1'-0"

© 2022 LDL STUDIO INC.

ARCHITECT OF RECORD:
LDL STUDIO
ARCHITECT / HOSPITALITY DESIGNER
LDL STUDIO, INC.
106 Putnam Street
Providence, RI 02909
P: 401.274.4516
F. 401.421.2631
www.ldlstudio.com
Architect of Record: Gary M. Lepore, AIA

CERTIFICATION:



CONSULTANTS:
M/E/P & FP ENGINEER:
HP ENGINEERING CONSULTING ENGINEERS, P.C.
15 MAIDEN LANE
NORTH HAVEN, CT
P: 203–239–9425
JOHN PHILLIPS, P.E.

STRUCTURAL ENGINEER:
AMR ENGINEERING INC.
82 SCENIC DRIVE
WEST WARWICK , RI 02893
P: 401.559.3659
ANTHONY ROTONDO, P.E.

OWNER:
ROGER WILLIAMS PARK ZOO
1000 ELMWOOD AVENUE
PROVIDENCE
RHODE ISLAND 02907

NUMBER	DATE	DESCRIPTION

REVISIONS:

PROJECT NAME:

RED PANDA EXHIBIT

RWPZ
1000 ELMWOOD AVENUE
PROVIDENCE
RHODE ISLAND 02907

SUBMISSION TYPE:
PERMIT SET

PROJECT TYPE:
NEW CONSTRUCTION

CLIENT NUMBER:

ISSUE DATE: NOVEMBER 14, 2022

SHEET NAME:
RED PANDA ENCLOSURE ELECTRICAL PLAN

DRAWING SCALE:

PROJECT NUMBER: 2022-03

DATE ISSUED: 11/14/2022

RP–E1

P:\22020\RPE1.dwg, 11/16/2022 10:53:10 AM, Adobe PDFa.pc3

IF THIS SHEET IS NOT 24 X 36 IT IS A REDUCED SCALE PRINT – SCALE ACCORDINGLY
LDL STUDIO INC. – CELEBRATING 27 YEARS OF AWARD WINNING SERVICE 1995 – 2022 ARCHITECTS AIA 2030 CHALLENGE ADOPTER
WWW.LDLSTUDIO.COM

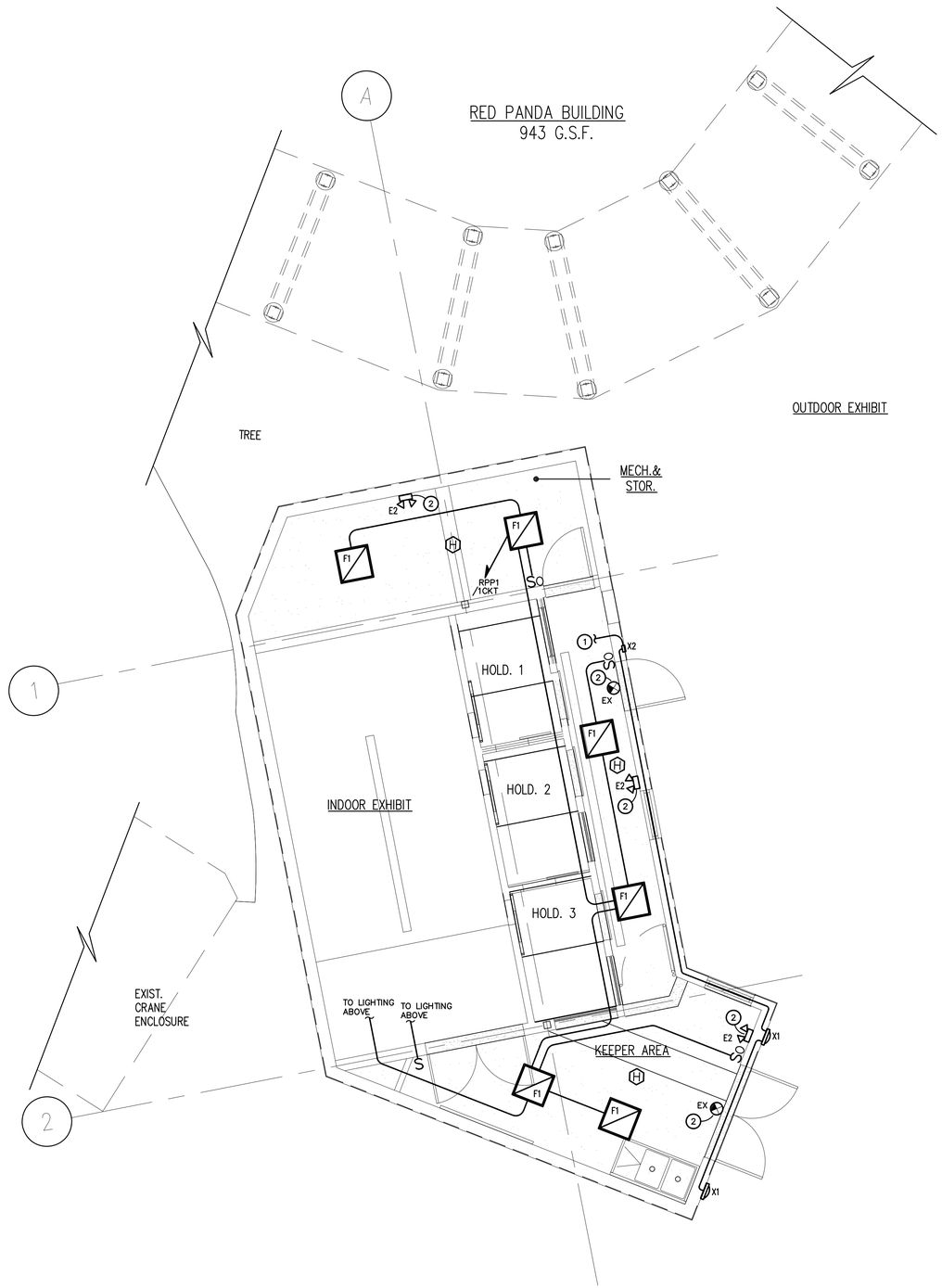

GROUND FLOOR LIGHTING PLAN

1/4" = 1'-0"

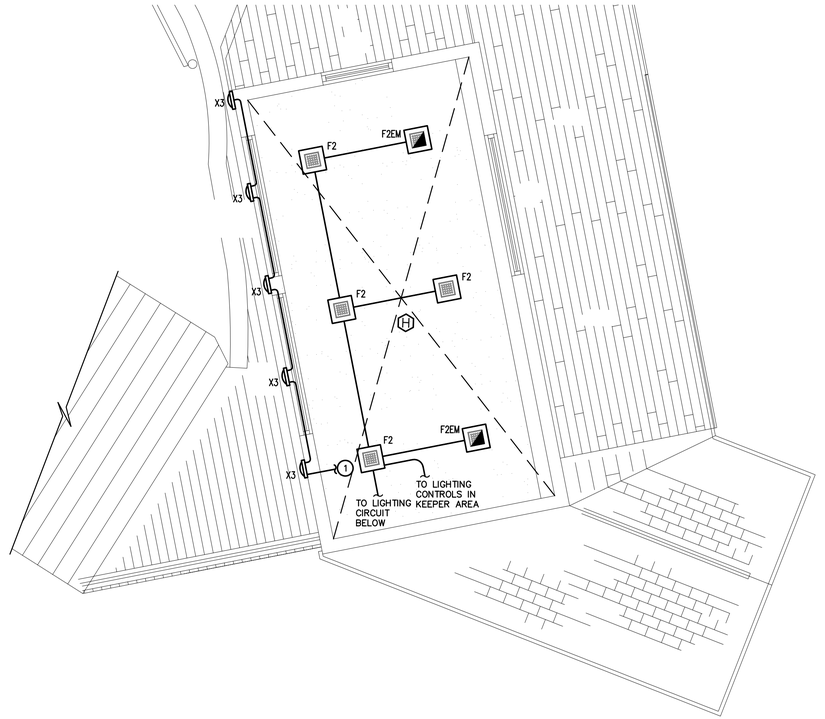

UPPER FLOOR LIGHTING PLAN

1/4" = 1'-0"

LIGHTING PLAN LEGEND

(1) THE ELECTRICAL CONTRACTOR SHALL FURNISH AND INSTALL BRANCH CIRCUIT WIRING TO SERVE ALL EXTERIOR LIGHTING FIXTURES CONSISTING OF 2 # 12, 1 # 12 GROUND IN 3/4" CONDUIT RUN TO PANEL "RPP1" VIA LIGHTING INVERTER EQUAL TO ISI MODEL # ABC2–110, 110 WATT AND CONTROLLED THRU TIME CLOCK AND PHOTO CELL – LOCATE TIME CLOCK AND INVERTER ADJACENT TO ELECTRICAL PANEL AND LOCATE PHOTOCELL IN FIELD PER ARCHITECTS DIRECTION.

(2) THE ELECTRICAL CONTRACTOR SHALL WIRE ALL EMERGENCY LIGHTING AND EXIT SIGNAGE FROM LINE SIDE OF LOCAL LIGHTING CIRCUIT (TYPICAL OF ALL).

LIGHTING BRANCH CIRCUIT NOTE:
ALL BRANCH CIRCUIT WIRING SERVING LIGHTING SHALL BE EQUAL TO AFC MC LIMINARY CABLE WITH INTEGRAL TWISTED PAIR 0–10VDC CONTROL CONDUCTORS.

0' 4' 8'

SCALE: 1/4" = 1'-0"

© 2022 LDL STUDIO INC.

ARCHITECT OF RECORD:
LDL STUDIO
ARCHITECT / HOSPITALITY DESIGNER
LDL STUDIO, INC.
106 Putnam Street
Providence, RI 02909
P: 401.274.4516
F. 401.421.2631
www.ldlstudio.com
Architect of Record: Gary M. Lepore, AIA

CERTIFICATION:

CONSULTANTS:

M/E/P & FP ENGINEER:
HP ENGINEERING CONSULTING ENGINEERS, P.C.
15 MAIDEN LANE
NORTH HAVEN, CT
P: 203–239–9425
JOHN PHILLIPS, P.E.

STRUCTURAL ENGINEER:
AMR ENGINEERING INC.
82 SCENIC DRIVE
WEST WARWICK , RI 02893
P: 401.559.3659
ANTHONY ROTONDO, P.E.

OWNER:
ROGER WILLIAMS PARK ZOO
1000 ELMWOOD AVENUE
PROVIDENCE
RHODE ISLAND 02907

NUMBER	DATE	DESCRIPTION

REVISIONS:

PROJECT NAME:
RED PANDA EXHIBIT
RWPZ
1000 ELMWOOD AVENUE
PROVIDENCE
RHODE ISLAND 02907

SUBMISSION TYPE:
PERMIT SET

PROJECT TYPE:
NEW CONSTRUCTION

CLIENT NUMBER:

ISSUE DATE: NOVEMBER 14, 2022

SHEET NAME:
RED PANDA ENCLOSURE LIGHTING PLAN

DRAWING SCALE:

PROJECT NUMBER: 2022-03

DATE ISSUED: 11/14/2022

RP–E2

P:\22020\RPE2.dwg, 11/16/2022 10:55:36 AM, Adobe PDFa.pc3

ADOPTER 2030 CHALLENGE AIA 2023 ARCHITECTS – 1995 SERVICE WINNING AWARD OF 27 YEARS CELEBRATING – 2022 INC. STUDIO LDL .COM WWW.LDLSTUDIO
IF THIS SHEET IS NOT 24 X 36 IT IS A REDUCED SCALE PRINT – SCALE ACCORDINGLY

ELECTRICAL RISER DIAGRAMS LEGEND

(A) THE ELECTRICAL CONTRACTOR SHALL FURNISH AND INSTALL NEW 60 AMP, 3 POLE, CIRCUIT BREAKER EXISTING DISTRIBUTION ENCLOSURE PANEL TO SERVE RED PANDA ENCLOSURE PANEL RP–P1.

(F1) THE ELECTRICAL CONTRACTOR SHALL DISCONNECT AND REMOVE THE EXISTING CONDUCTORS CONSISTING OF 2 # 10, 1 # 10 GROUND IN EXISTING BURIED 1" SCHEDULE 40 PVC CONDUIT PRESENTLY SERVING THE RED PANDA ENCLOSURE AND SHALL FURNISH AND INSTALL 4 # 6, 1 # 10 GROUND IN THE EXISTING/EXTENDED 1" SCHEDULE 40 PVC CONDUIT.

(F2) THE ELECTRICAL CONTRACTOR SHALL EXTEND 1" SCHEDULE 40 PVC FEEDER CONDUIT BELOW GRADE TO NEW PANEL RP–P1 COMPLETE WITH CONTINUATION OF 4 # 6, 1 # 10 GROUND FEEDER CONDUCTORS AS INDICATED/AS REQUIRED – MINIMUM BURIAL DEPTH 24".

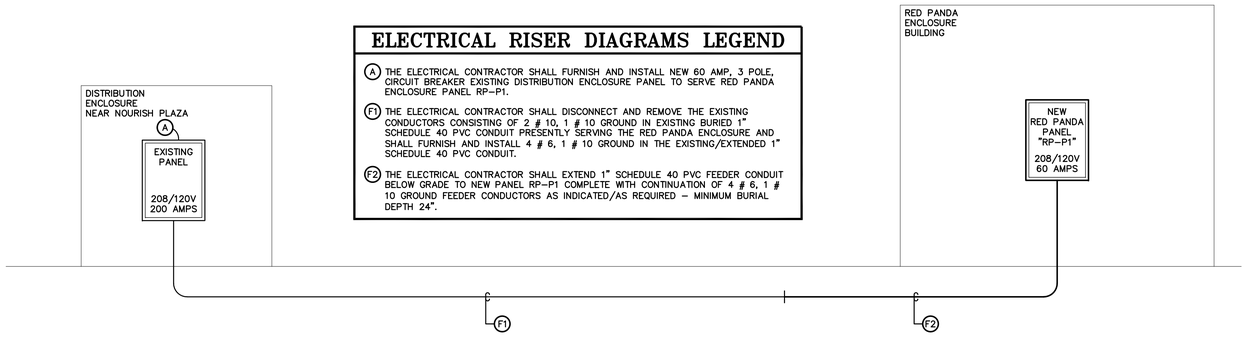

RED PANDA ENCLOSURE ELECTRICAL RISER DIAGRAM

MECHANICAL EQUIPMENT FEEDER SCHEDULE

RED PANDA ENCLOSURE

NAME/ LOCATION	VOLTAGE/ PHASE	AMPS	FEEDER	DISCONNECT SWITCH	FUSE SIZE	STARTER SIZE	CIRCUIT BREAKER	PANEL	HP	REMARKS
WH–1	208V, 1ø	21.63	(2) #10, (1) #10 GND. IN 3/4" CONDUIT	30A Stt NEMA 1	–	–	30A, 2P	RP–P1	–	3
CU–1	208V, 1ø	30.0	(2) #8, (1) #10 GND. IN 1" CONDUIT	60A, 2P, 240V NEMA 3R	–	–	40A, 2P	RP–P1	–	5 6 7
HP–1,2	120V, 1ø	2.0 EACH	(2) #12, (1) #12 GND. IN 3/4" CONDUIT	St NEMA 1	–	PWU	20A, 1P EACH	RP–P1	–	1
RH–1,2	208V, 1ø	9.62 EACH	(2) #12, (1) #12 GND. IN 3/4" CONDUIT	Stt NEMA 1	–	PWU	20A, 2P EACH	RP–P1	–	2
EF–1	120V, 1ø	4.4	(2) #12, (1) #12 GND. IN 3/4" CONDUIT	PWU	–		20A, 1P	RP–P1	.167 HP	4
EF–2	120V, 1ø	4.4	(2) #12, (1) #12 GND. IN 3/4" CONDUIT	PWU	–		20A, 1P	RP–P1	.167 HP	4 9
EF–3	120V, 1ø	4.4		PWU	–				.167 HP	4 9
EH–1,2	208V, 1ø	7.2 EACH	(2) #12, (1) #12 GND. IN 3/4" CONDUIT	PWU NEMA 1	–	PWU	20A, 2P EACH	CH–P1	1.5 KW	

NOTES:

1. ALL NEW CIRCUIT BREAKERS SERVING MECHANICAL EQUIPMENT SHALL BE HACR RATED.
2. ALL FINAL MOTOR CONNECTIONS SHALL UTILIZE A MAXIMUM 4' LENGTH OF LIQUID TIGHT FLEXIBLE STEEL CONDUIT.
3. THE TEMPERATURE CONTROL CONTRACTOR SHALL FURNISH AND INSTALL ALL LOW VOLTAGE TEMPERATURE CONTROL WIRING AND 120V POWER WIRING REQUIRED TO SUPPORT TEMPERATURE CONTROL PANELS AND CONTROL TRANSFORMERS.
4. UNLESS OTHERWISE NOTED THE MECHANICAL CONTRACTOR SHALL FURNISH AND INSTALL ALL MECHANICAL EQUIPMENT INDICATED WITHIN THE MECHANICAL EQUIPMENT FEEDER SCHEDULE INCLUDING ALL ACCESSORIES AND HARDWARE REQUIRED FOR A COMPLETE INSTALLATION. THE ELECTRICAL CONTRACTOR SHALL FURNISH AND INSTALL ELECTRICAL FEEDER FROM ELECTRICAL PANEL TO EQUIPMENT TERMINATION CONNECTION, CONDUIT FOR CONTROL WIRING, DISCONNECT, STARTER, ETC. FOR A COMPLETE ELECTRICAL INSTALLATION. THE EXACT LOCATION OF THE EQUIPMENT SHALL BE LOCATED IN THE FIELD BY THE MECHANICAL CONTRACTOR.

REMARKS:

1. THE ELECTRICAL CONTRACTOR SHALL FURNISH AND INSTALL NEW SINGLE POLE MANUAL STARTER, TOGGLE TYPE, WITH THERMAL OVERLOAD RELAY, RED "RUN" PILOT LIGHT, AND STAINLESS STEEL COVER PLATE. SQUARE D – TYPE F OR EQUAL.
2. THE ELECTRICAL CONTRACTOR SHALL FURNISH AND INSTALL NEW TWO POLE MANUAL STARTER, TOGGLE TYPE, WITH THERMAL OVERLOAD RELAY, RED "RUN" PILOT LIGHT, AND STAINLESS STEEL COVER PLATE. SQUARE D – TYPE F OR EQUAL.
3. THE ELECTRICAL CONTRACTOR SHALL FURNISH AND INSTALL NEW 30 AMP, TWO POLE MANUAL STARTER, TOGGLE TYPE, WITH THERMAL OVERLOAD RELAY, RED "RUN" PILOT LIGHT, AND STAINLESS STEEL COVER PLATE. SQUARE D – TYPE F OR EQUAL.
4. THE ELECTRICAL CONTRACTOR SHALL FURNISH AND INSTALL TIME CLOCK ADJACENT TO ELECTRICAL PANEL FOR FAN CONTROL. TIME CLOCK TO BE EQUAL TO INTERMATIC #T7400BC SERIES.
5. THE ELECTRICAL CONTRACTOR SHALL FURNISH AND INSTALL A DISCONNECT SWITCH OF SIZE AS INDICATED AT UNIT. VERIFY TERMINATION POINT PRIOR TO INSTALLATION WITH THE MECHANICAL CONTRACTOR.
6. THE ELECTRICAL CONTRACTOR SHALL FURNISH AND INSTALL (1) GFI SERVICE DUPLEX RECEPTACLE WITH NEMA 3R IN–USE COVER, (AS REQUIRED BY NEC). (1) SURFACE MOUNTED, NONMETALLIC, GASKETED, CORROSION RESISTANT, LED FIXTURE. FIXTURE SHALL BE CANLET #02–15–L–W–F–OG–18 OR EQUAL. (1) SINGLE POLE SWITCH IN WEATHER–TIGHT ENCLOSURE. FURNISH AND INSTALL (2) #12, (1) #12 GND. IN 3/4" CONDUIT TO NEW 20AMP, 1–POLE CIRCUIT BREAKER IN NEAREST AVAILABLE 120V PANEL.
7. SPLIT SYSTEMS ARE EQUIPPED WITH AN INDOOR AIR HANDLING UNIT AND AN OUTDOOR AIR COOLED CONDENSING UNIT. THE ELECTRICAL CONTRACTOR SHALL RUN SEPARATE ELECTRICAL FEEDS TO THE INDOOR AIR HANDLER AND THE OUTDOOR CONDENSING UNIT. INTERCONNECTING CONTROL CABLING SHALL BE FURNISHED WITH UNITS, INSTALLED BY THE MECHANICAL CONTRACTOR AND WIRED BY THE ELECTRICAL CONTRACTOR. THE ELECTRICAL CONTRACTOR SHALL PROVIDE A DEDICATED 120V, 20A RECEPTACLE MOUNTED ADJACENT TO INDOOR UNIT FOR OPERATION OF CONDENSATE PUMP.
8. THE ELECTRICAL CONTRACTOR SHALL FURNISH AND INSTALL NEW EMERGENCY SHUT–OFF SWITCH AT EXITS AND 120V RATED HEATSTAT AT CEILING OF AREAS CONTAINING GAS OR OIL FIRED UNIT HEATERS, WATER HEATERS, FURNACES, OR BOILERS TO SEVER ELECTRICAL POWER TO ALL EQUIPMENT INDICATED THRU CONTROL CIRCUIT. HEATSTATS SHALL BE WIRED TO SHUT DOWN NATURAL GAS FLOW UPON DETECTION OF EXCESS HEAT WITHIN AREA.
9. THE ELECTRICAL CONTRACTOR SHALL INTERLOCK EXHAUST FANS EF–2 & EF–3 WITH 24V MOTOR OPERATED LOUVER LD–1 – WIRE PER MANUFACTURERS DIRECTION.

EQUIPMENT ABBREVIATIONS:

CU – CONDENSING UNIT	WH – WATER HEATER
GUH – GAS–FIRED UNIT HEATER	EF – EXHAUST FAN
HP – HEAT PUMP	LD – DAMPER
EH – ELECTRIC HEATER	FDF – FLOOR FAN
RH – RADIANT HEATER	PWU – PACKAGED WITH UNIT

PANELBOARD SCHEDULE

PANEL/LOCATION	SOURCE	MANUFACTURER	MLO/MCB	VOLTS–PHASE–WIRES	POLES	BRANCH DEVICES	REMARKS
RP–P1 RED PANDA ENCLOSURE	EXISTING DISTRIBUTION CABINET	EATON PRL1A	100A RATED 60A MCB	208Y/120V–1ø–3W	30	(1) 40A, 2P C/B – CU–1 (1) 30A, 2P C/B – WH–1 (2) 20A, 2P C/B'S – RH–1,2 (2) 20A, 2P C/B'S – EH–1,2 (17) 20A, 1P C/B'S (1) 20A, 1P GFCI C/B – WATER BOWL HTR	
EXISTING PANEL IN DIST. ENCLOSURE NEAR NOURISH PLAZA	ADJACENT BUILDING	SIEMENS	200A RATED MLO	208Y/120V–3ø–4W	30	ADD (1) 60A, 2P C/B – PANEL RP–P1	

PANELBOARD SCHEDULE NOTES:

1. FURNISH AND INSTALL SELF ADHESIVE PHENOLIC NAME PLATES FOR ALL NEW AND EXISTING PANELBOARDS WITHIN PROJECT SCOPE. VERIFY NOMENCLATURE PRIOR TO AFFIXING NAMEPLATE TO PANELBOARD. EACH LINE OF TEXT SHALL BE CENTER ALIGNED ON NAMEPLATE. INFORMATION ON NAMEPLATES SHALL BE AS FOLLOWS:

   PANEL NAME – LETTER HEIGHT 3/4"
   (NAME AS INDICATED ON PANELBOARD SCHEDULE)
   VOLTAGE/AMPS – LETTER HEIGHT 1/4"
   (208Y/120V – 125A)

2. ALL NEW PANELBOARDS SHALL HAVE THE FOLLOWING:
   – A DOUBLE PIANO HINGED GUTTER/DOOR ACCESS.
   – A 100% RATED COPPER BUS, NEUTRAL BAR, AND GROUND BAR.
   – A 22K AIC RATING MINIMUM.
   – BOLT–ON TYPE CIRCUIT BREAKERS.
3. FURNISH AND INSTALL (2) NEW TYPED PANEL DIRECTORIES WITH CIRCUIT DESCRIPTIONS FOR ALL NEW AND EXISTING PANELS ASSOCIATED WITH THE PROJECT. (1) DIRECTORY SHALL BE INSTALLED IN THE PANEL AND (1) DIRECTORY SHALL GO TO FACILITIES MANAGEMENT FOR RECORD FILE.
4. ALL DIMENSIONS SHALL BE VERIFIED IN THE FIELD PRIOR TO ORDERING ANY NEW PANELBOARDS TO CONFIRM THEIR ABILITY TO BE INSTALLED IN THE LOCATIONS SHOWN ON THE PLANS.

LIGHT FIXTURE SCHEDULE

TYPE	MANUFACTURER	CATALOG NUMBER	DESCRIPTION	LAMPS	VOLTAGE	MOUNTING
EX	SURE–LITES	APXH7–R–BK	EXIT SIGNAGE – BLACK THERMOPLASTIC HOUSING WITH RED LED WITH DIFFUSED LENS AND SELF–CONTAINED EMERGENCY NICAD BATTERY AND REMOTE HEAD CAPABILITIES EXIT SIGN SHALL COMPLY WITH NFPA 101–5–10 IN ALL REGARDS INCLUDING DIRECTIONAL "CHEVRON" TYPE INDICATOR	LED	MULTI	UNIVERSAL
EM	SURE–LITES	SEL–50–SD	DUAL HEAD EMERGENCY LIGHT – WHITE THERMOPLASTIC HOUSING WITH SELF–CONTAINED EMERGENCY NICAD BATTERY AND SELF DIAGNOSTIC FEATURE	LED	MULTI	SURFACE
X1	LIGHTWAY	TURW–9–LED–F1C–2–B1–CSA	EXTERIOR WET LOCATION WALL MOUNTED LED FIXTURE WITH SATIN BLACK FINISH – FEED FIXTURE FROM LIGHTING INVERTER AS INDICATED	10W LED 1518 LUMEN 3000 KELVIN	MULTI	SURFACE
X2	SOLAVANTI LIGHTING	KAHN–D68066BL–30–44–BL–N–65–120	EXTERIOR WET LOCATION STEP LIGHT LED FIXTURE WITH BLACK FINISH FEED FIXTURE FROM LIGHTING INVERTER AS INDICATED	8.5W LED 150 LUMEN 3000 KELVIN	120	RECESSED
X3	SOLAVANTI LIGHTING	YAZ–D68068C–6W–30–G–BL–N–65–120	EXTERIOR WET LOCATION WALL MOUNTED LED FIXTURE WITH BLACK FINISH – FEED FIXTURE FROM LIGHTING INVERTER AS INDICATED	6W LED 540 LUMEN 3000 KELVIN	120	RECESSED
F1	NEWSTAR LIGHTING	33–W–2–A–L4–35–1–2–LC3–12–WL–DM	20" X 24.31" X 3" LED SURFACE MOUNTED WET LOCATION WALL FIXTURE WITH 0–10VDC DIMMING CAPABILITIES	50W LED 6000 LUMEN 3500 KELVIN	120	SURFACE MOUNTED
F2	NEWSTAR LIGHTING	33–W–2–A–L6–35–1–2–LC3–12–WL–DM	20" X 24.31" X 3" LED SURFACE MOUNTED WET LOCATION WALL FIXTURE WITH 0–10VDC DIMMING CAPABILITIES	75W LED 8625 LUMEN 3500 KELVIN	120	SURFACE MOUNTED
F2EM	NEWSTAR LIGHTING	33–W–2–A–L6–35–1–2–LC3–12–WL–DM	20" X 24.31" X 3" LED SURFACE MOUNTED WET LOCATION WALL FIXTURE WITH 0–10VDC DIMMING CAPABILITIES – FURNISH AND INSTALL WITH MINI LIGHTING INVERTER EQUAL TO ISI MODEL # ISI–ABC2–220, 220 WATT TO SERVE THE F2EM FIXTURES – LOCATE MINI INVERTER IN THE MECHANICAL & STORAGE ROOM ADJACENT TO ELECTRICAL PANEL RP–P1	75W LED 8625 LUMEN 3500 KELVIN	120	SURFACE MOUNTED

NOTES:

1. CONTRACTOR SHALL FURNISH AND INSTALL A SAMPLE OF EACH PROPOSED SUBSTITUTED LIGHT FIXTURE AND SUPPORTING PHOTO–METRIC DATA TO THE OWNER FOR INSPECTION AND REVIEW. INCLUDE ALL MOUNTING HARDWARE, LENSES, AND LAMPS AS REQUIRED FOR COMPLETE INSTALLATION. CONTRACTOR SHALL BE RESPONSIBLE FOR COORDINATING DELIVERY AND SCHEDULING OF SUBSTITUTED LIGHT FIXTURE WITHOUT DELAYING PROJECT. UPON REJECTION OF ANY PROPOSED SUBSTITUTE LIGHT FIXTURE, CONTRACTOR SHALL PROVIDE THE SPECIFIED FIXTURE.
2. ALL LIGHT FIXTURES SHALL BE RESTRAINED FOR SEISMIC FORCES IN ACCORDANCE WITH ALL BUILDING CODES.
3. UPON COMPLETION OF CONSTRUCTION ELECTRICAL CONTRACTOR SHALL REPLACE ALL NON–FUNCTIONING LIGHT BOARDS AND DRIVERS AND SHALL CLEAN ALL FIXTURES FROM CONSTRUCTION DEBRIS AND FINGERPRINTS. REPLACE ALL LENSES, REFLECTORS, AND/OR COMPLETE FIXTURES THAT HAVE BEEN DAMAGED PRIOR TO COMPLETION OF CONSTRUCTION.
4. ALL NEW TYPE "EX", "EM", AND "E" LIGHT FIXTURES SHALL BE WIRED TO LINE SIDE OF AREA LIGHTING CIRCUIT. FURNISH AND INSTALL NEW CIRCUIT BREAKER LOCK–ON DEVICE TO CIRCUIT BREAKERS THAT SERVE ANY EMERGENCY/NIGHT LIGHT FIXTURES.

REMARKS:

E – "EMERGENCY LIGHTING FIXTURE" – LIGHT FIXTURES DENOTED WITH "E" SUFFIX SHALL BE FURNISH AND INSTALL WITH A INTEGRAL EMERGENCY BATTERY PACK COMPLETE WITH TEST STATION. EMERGENCY BATTERY PACK SHALL BE WIRED LINE SIDE OF AREA SWITCHING AND OPERATE AS AN "EMERGENCY LIGHT" FIXTURE IN THE EVENT OF UTILITY POWER INTERRUPTION.

0–10VDC – ALL BRANCH LIGHTING CIRCUITS SERVING LIGHTING FIXTURES WITH 0–10VDC DIMMING CAPABILITING SHALL BE PROVIDED WITH GRAY AND PURPLE, 600 V RATED CONTROL WIRES RUN WITHIN THE SAME CONDUIT AS THE POWER CONDUCTORS – WIRE PER MANUFACTURERS DIRECTION.

ARCHITECT OF RECORD:
LDL STUDIO
ARCHITECT / HOSPITALITY DESIGNER
LDL STUDIO, INC.
106 Putnam Street
Providence, RI 02909
P: 401.274.4516
F. 401.421.2631
www.ldlstudio.com
Architect of Record: Gary M. Lepore, AIA

CERTIFICATION:

CONSULTANTS:

M/E/P & FP ENGINEER:
HP ENGINEERING CONSULTING ENGINEERS, P.C.
15 MAIDEN LANE
NORTH HAVEN, CT
P: 203–239–9425
JOHN PHILLIPS, P.E.

STRUCTURAL ENGINEER:
AMR ENGINEERING INC.
82 SCENIC DRIVE
WEST WARWICK , RI 02893
P: 401.559.3659
ANTHONY ROTONDO, P.E.

OWNER:
ROGER WILLIAMS PARK ZOO
1000 ELMWOOD AVENUE
PROVIDENCE
RHODE ISLAND 02907

NUMBER	DATE	DESCRIPTION

REVISIONS:

PROJECT NAME:
RED PANDA EXHIBIT
RWPZ
1000 ELMWOOD AVENUE
PROVIDENCE
RHODE ISLAND 02907

SUBMISSION TYPE:
PERMIT SET

PROJECT TYPE:
NEW CONSTRUCTION

CLIENT NUMBER:

ISSUE DATE: NOVEMBER 14, 2022

SHEET NAME:
ELECTRICAL RISER DIAGRAMS & SCHEDULES

DRAWING SCALE:

PROJECT NUMBER: 2022-03

DATE ISSUED: 11/14/2022

RP–E3

© 2022 LDL STUDIO INC.

P:\22020\RPE3.dwg, 11/16/2022 10:56:52 AM, Adobe PDFa.pc3

IF THIS SHEET IS NOT 24 X 36 IT IS A REDUCED SCALE PRINT – SCALE ACCORDINGLY

WWW. LDLSTUDIO. COM LDL STUDIO INC. – CELEBRATING 27 YEARS OF AWARD WINNING SERVICE 1995 – 2022 ARCHITECTS AIA 2030 CHALLENGE ADOPTER

ELECTRICAL SYMBOLS LEGEND

LIGHTING

S	0–10VDC WALL DIMMER SWITCH – 10A, 120/277V PASS & SEYMOUR/LEGRAND #RH4FBL3PTC
So	0–10VDC DIMMING OCCUPANCY SENSOR PASS & SEYMOUR #PW–311–G
	LIGHT FIXTURE (TYPE AS INDICATED) SEE LIGHTING FIXTURE SCHEDULE FOR INFORMATION
SINGLE FACE / DUAL FACE	EXIT SIGN CHEVRON(S) INDICATE DIRECTION OF EGRESS SEE LIGHTING FIXTURE SCHEDULE FOR INFORMATION
	TWIN HEAD EMERGENCY LIGHTING UNIT WITH BATTERY BACK–UP SEE LIGHTING FIXTURE SCHEDULE FOR INFORMATION

POWER

	DUPLEX (GFCI) RECEPTACLE – 20A, 125V, NEMA 5–20R PASS & SEYMOUR/LEGRAND #2097TRWRNAGRY
	QUADRAPLEX (DOUBLE DUPLEX) (GFCI) RECEPTACLE – 20A, 125V, NEMA 5–20R – (2) PASS & SEYMOUR/LEGRAND #2097TRWRNAGRY
J	JUNCTION OR BACK BOX
RP/20A,1P	ELECTRICAL HOMERUN (PANELBOARD AND CIRCUIT BREAKER SIZE) ALL HOMERUNS SHALL BE (3) #12'S UNLESS NOTED OTHERWISE.
RP	ELECTRICAL PANELBOARD (PANELBOARD NAME AS INDICATED) SEE PANELBOARD SCHEDULE FOR INFORMATION.
	GROUND
S_{tp}	SINGLE POLE MOTOR STARTER SWITCH WITH THERMAL OVERLOAD PROTECTION "p" DENOTES WITH PILOT LIGHT
	DISCONNECT SWITCH
	MOTOR
TC	TIME CLOCK – 24 HOUR, 7 DAY INTERMATIC OR EQUAL
S_{EM}	EMERGENCY POWER OFF RED TOGGLE SWITCH WITH RED COVER PLATE ENGRAVED WITH "EMERGENCY POWER OFF" IN WHITE. SEE MECHANICAL EQUIPMENT FEEDER SCHEDULE FOR WIRING REQUIREMENTS. MOUNT AT 48" A.F.F. TO CENTER OF DEVICE UNLESS NOTED OTHERWISE

FIRE ALARM

FACP	INTELLIGENT ADDRESSABLE FIRE ALARM CONTROL PANEL FIRE–LITE MODEL MS–25 WITH BATTERY BACK–UP
F	ADDRESSABLE MANUAL DUAL–ACTION PULL STATION W/ FLASHSCAN & KEY–LOCK RESET FIRE–LITE – NBG–12LX AND STOPPER II COVER SEMI–FLUSH MOUNT AT 42" A.F.F. TO CENTER OF DEVICE FOR SURFACE MOUNT USE BACKBOX #SB–10
F	SYNCHRONIZED SELECTABLE OUTPUT HORN/STROBE (ADA COMPLIANT) FIRE–LITE – P1224MC–MDL FOR SURFACE MOUNT USE BACKBOX SKIRT #BBS–SP2R MOUNT AT 7'–6" A.F.F. TO CENTER OF DEVICE
S	INTELLIGENT MULTI–SENSOR PHOTOELECTRIC AND THERMAL DETECTOR WITH AUTO ADJUSTING SENSITIVITY LEVELS & LOW–TEMP SIGNAL FIRE–LITE – FAPT–851 – ACCLIMATE PLUS
H	INTELLIGENT HEAT DETECTOR (FIXED TEMPERATURE) FIRE–LITE – FST–851 SERIES
H HS	120V RATED HEAT STAT

ABBREVIATIONS

(2)	INDICATES QUANTITIES OF DEVICES AT THE SAME LOCATION
48"	INDICATES MOUNTING HEIGHT TO CENTER OF DEVICE
A.F.F.	ABOVE FINISHED FLOOR
C	MOUNT DEVICE ABOVE COUNTER BACKSPLASH
EM or EMG	EMERGENCY
G or GFI	GROUND FAULT INTERRUPTER
S.S.	STAINLESS STEEL
W	WALL MOUNT
WP	FURNISH AND INSTALL DEVICE IN A WEATHERPROOF ENCLOSURE

ELECTRICAL SYMBOL LEGEND NOTES:

"G or GFI" – "GROUND FAULT INTERRUPTER RECEPTACLE"

IN ADDITION TO ALL LOCATIONS INDICATED ON THE ELECTRICAL PLANS THE ELECTRICAL CONTRACTOR SHALL PROVIDE A "GROUND FAULT INTERRUPTER RECEPTACLE" AT ALL LOCATIONS WITHIN 6' OF SINK AND AS REQUIRED PER THE NATIONAL ELECTRIC CODE.

GENERAL ELECTRICAL NOTES

1. THESE DRAWINGS ARE INTENDED TO OUTLINE THE PROJECT SCOPE OF WORK. THE ELECTRICAL CONTRACTOR SHALL FURNISH AND INSTALL ALL DEVICES, BACK BOXES, EQUIPMENT, ACCESSORIES, MOUNTING HARDWARE, CIRCUIT BREAKERS, CONDUIT, WIRE, CABLE, ETC. AS NECESSARY TO SATISFACTORILY COMPLETE THE PROJECT AS OUTLINED ON THE ELECTRICAL DRAWINGS, UNLESS SPECIFICALLY NOTED OTHERWISE.
2. ALL ELECTRICAL WORK SHALL BE PERFORMED IN COMPLIANCE WITH THE NATIONAL ELECTRICAL CODE, ALL STATE AND LOCAL BUILDING CODES, AND ALL OTHER APPLICABLE CODES IN EFFECT.
3. ALL ELECTRICAL WORK COMPLETED ON THIS PROJECT SHALL BE DONE IN STRICT COMPLIANCE WITH THE ROGER WILLIAMS PARK ZOO STANDARDS FOR EQUIPMENT, MATERIALS, AND INSTALLATION PROCEDURES FOR ELECTRICAL CONSTRUCTION PROJECTS. ALL CONSTRUCTION PROCEDURES SHALL BE DONE IN STRICT COMPLIANCE WITH THE ROGER WILLIAMS PARK ZOO FACILITIES, FIRE, SAFETY, ANIMAL HANDLERS AND SECURITY DEPARTMENTS.
4. THE ELECTRICAL CONTRACTOR SHALL TAKE ALL REQUIRED SAFETY PRECAUTIONS INCLUDING PERSONAL ARC–FLASH PROTECTION PROCEDURES WHILE WORKING ON ALL ELECTRICAL EQUIPMENT.
5. THE BUILDING WILL REMAIN OPERATIONAL THROUGHOUT THE COURSE OF THE CONSTRUCTION PROJECT. THE CONTRACTOR SHALL MAKE EVERY EFFORT TO MINIMIZE DISRUPTIONS TO THE NORMAL DAY TO DAY OPERATIONS. ALL SYSTEMS SHUT DOWN OR OUT OF SERVICE DURING THE WORK SHIFT MUST BE RETURNED TO SERVICE BY THE END OF THE SHIFT.
6. CONTRACTOR SHALL BE RESPONSIBLE FOR COORDINATING ALL WORK WITH UTILITY, OWNER AND OTHER TRADES.
7. CONTRACTOR SHALL BE RESPONSIBLE FOR ALL FEES, INCLUDING BUT NOT LIMITED TO: PERMITS, TESTING, ETC.
8. PROVIDE PROOF OF LIABILITY AND PROPERTY INSURANCE TO THE OWNER BEFORE COMMENCING WITH WORK. ALL DEDUCTIBLES SHALL BE PAID FOR BY THE CONTRACTOR IN CASE OF A CLAIM.
9. WARRANT AND GUARANTEE ALL WORK AND MATERIALS FOR ONE YEAR FROM THE FINAL ACCEPTANCE BY THE OWNER.
10. THE CONTRACTOR SHALL BE RESPONSIBLE FOR ALL RIGGING OF NEW EQUIPMENT AS REQUIRED TO COMPLETE THE PROJECT. INCLUDING ANY/ALL OWNER FURNISHED EQUIPMENT WHEN PROVIDED. ALL ELECTRICAL EQUIPMENT SHALL BE PURCHASED BY ELECTRICAL CONTRACTOR UNLESS NOTED OTHERWISE ON CONTRACT DOCUMENTS.
11. INSTALL ALL MATERIALS LEVEL, PLUMB, AND PARALLEL WITH WALLS AND CEILINGS TO PRESENT A NEAT AND WORKMANLIKE APPEARANCE.
12. LAYOUT AND WIRING SHOWN ON THESE DRAWINGS IS DIAGRAMMATIC ONLY. EXACT LOCATION OF EQUIPMENT AND WIRING SHALL BE DETERMINED IN FIELD.
13. INSTALL ALL WIRING CONCEALED IN WALLS OR ABOVE CEILINGS UNLESS SPECIFICALLY NOTED OTHERWISE.
14. ALL SUPPLEMENTARY STEEL REQUIRED FOR ELECTRICAL WORK SHALL BE PROVIDED BY ELECTRICAL CONTRACTOR.
15. ANY DEVIATIONS FROM THESE PLANS AND SPECIFICATIONS SHALL BE REQUESTED IN WRITING BY THE CONTRACTOR AND SHALL REQUIRE A WRITTEN APPROVAL FROM THE ENGINEER. NO CLAIMS FOR DELAYS SHALL BE ENTERTAINED AS A RESULT OF REQUESTED DEVIATIONS.
16. CONTRACTOR SHALL SUBMIT SHOP DRAWINGS OF ALL NEW EQUIPMENT, LIGHT FIXTURES, MATERIALS, ETC., PROPOSED TO BE UTILIZED ON THIS PROJECT IN ELECTRONIC PDF FORMAT FOR APPROVAL BY THE ENGINEER PRIOR TO COMMENCING WITH CONSTRUCTION.
17. PRODUCTS SPECIFIED ON THESE DRAWINGS MAY BE SUBSTITUTED ONLY WITH WRITTEN APPROVAL FROM THE ENGINEER IN ACCORDANCE WITH THE INVITATION TO BID AND ADDITIONAL PROVISIONS/SCOPE OF WORK INCLUDED WITHIN THE BID DOCUMENTS. WHERE ITEMS HAVE BEEN SUBSTITUTED, THE CONTRACTOR SHALL BEAR THE RESPONSIBILITY FOR ANY AND ALL DIMENSIONS.
18. CONTRACTOR SHALL BE RESPONSIBLE FOR MAINTAINING A RECORD SET OF AS–BUILT DRAWINGS TO BE TURNED OVER TO OWNER'S REPRESENTATIVE AT THE COMPLETION OF THE PROJECT. INFORMATION MUST INCLUDE ANY VARIATIONS MADE, LOCATIONS OF CIRCUITING, CHANGES TO ANY MODEL NUMBERS OF SPECIFIED ITEMS, AND ANY OTHER INFORMATION THAT VARIES FROM THE PLANS. CONTRACTOR SHALL ALSO PROVIDE THE OWNER WITH (3) BOUND COPIES OF OPERATING AND MAINTENANCE MANUALS CONTAINING MAINTENANCE INFORMATION, PARTS NUMBERS, ETC., FOR ALL NEW ELECTRICAL EQUIPMENT.
19. CONTRACTOR SHALL VERIFY SIZES OF ALL FUSES AND MOTOR STARTER HEATERS WITH APPROVED MECHANICAL AND OWNER FURNISHED EQUIPMENT.
20. ELECTRICAL CONTRACTOR IS RESPONSIBLE FOR ANY/ALL ELECTRICAL SHUTDOWNS REQUIRED TO COMPLETE THE WORK OUTLINED ON THESE DRAWINGS. ALL SHUTDOWNS SHALL BE LOCKED OFF AND TAGGED OUT. SHUTDOWNS SHALL BE COORDINATED THROUGH THE OWNER'S REPRESENTATIVE.
21. ELECTRICAL CONTRACTOR SHALL COORDINATE THE LAYOUT OF THE ELECTRICAL ROOMS/CLOSETS TO ASSURE THAT THERE WILL BE NO CONFLICTS OR CODE SPACING VIOLATIONS BETWEEN PANELS, TRANSFORMERS, CABLE TRAY, BUILDING STRUCTURE, OR WORK AS PERFORMED BY OTHER TRADES. CONTRACTOR SHALL NOTIFY OWNER/ENGINEER UPON ANY POTENTIAL CONFLICTS PRIOR TO INSTALLATION OF EQUIPMENT. CONTRACTOR SHALL NOT PROCEED INSTALLATION WITHOUT WRITTEN/DRAWING SOLUTION FROM ENGINEER.
22. THE CONTRACTOR SHALL FURNISH AND INSTALL BRIDAL RINGS FOR ALL ARMORED CABLE RUNS ABOVE HUNG CEILING AND ALL CABLE RUNS LEAVING CABLE TRAY. INSTALL RINGS WITHIN 2' FROM CABLE ORIGIN, AT END OF CABLE RUN, AND AT MAXIMUM 6' INTERVALS ELSEWHERE. NO CABLES SHALL BE ALLOWED TO REST ON OR BE SUPPORTED BY THE CEILING GRID OR CEILING SUPPORT SYSTEM.
23. TEMPORARILY RELOCATE ELECTRICAL EQUIPMENT AS REQUIRED TO ACCOMMODATE THE CONSTRUCTION SCHEDULE. ALL AREAS NOT UNDER CONSTRUCTION MUST BE KEPT OPERATIONAL DURING CONSTRUCTION. TO ACCOMPLISH THIS, PROVIDE THE NECESSARY TEMPORARY ELECTRICAL SERVICES. REMOVE TEMPORARY DEVICES UPON COMPLETION OF CONSTRUCTION.
24. CONTRACTOR SHALL PROVIDE TEMPORARY POWER AND LIGHTING AS REQUIRED DURING THE ENTIRE DURATION OF CONSTRUCTION. THE CONTRACTOR SHALL REMOVE ALL TEMPORARY POWER AND LIGHTING UPON COMPLETION OF THE PROJECT.
25. WHERE REMOVAL OR RELOCATION OF EXISTING CONDUIT OR INSTALLATION OF NEW CONDUIT PASSES THROUGH WALLS, THE OPENINGS SHALL BE PATCHED, SEALED, AND PAINTED TO MATCH THE SURROUNDING WALL. WHERE REMOVAL OR RELOCATION OF EXISTING CONDUIT OR INSTALLATION OF NEW CONDUIT PASSES THROUGH FLOOR, THE OPENINGS SHALL BE PATCHED AND SEALED TO MATCH SURROUNDING FLOOR. CONSULT ARCHITECT ON LOCATIONS AND MATERIALS REQUIRED.
26. ELECTRICAL CONTRACTOR SHALL SEAL ALL ELECTRICAL PENETRATIONS THROUGH FIRE RATED PARTITIONS INCLUDING THOSE LEFT BECAUSE OF THE DEMOLITION WORK WITH FIRE RATED MATERIAL EQUAL TO DOW CORNING SILICONE RTV FOAM AS A MINIMUM. MATERIAL SELECTION SHALL BE BASED ON RATING OF PARTITION PENETRATED.
27. FURNISH AND INSTALL KNOCKOUT COVERS OR PLUGS ON ALL EXISTING PANELS, EQUIPMENT, AND OUTLET BOX OPENINGS CREATED BY THE REMOVAL OR RELOCATION OF EXISTING RACEWAYS.
28. PROVIDE A METERED NYLON PULL–LINE FOR EACH EMPTY CONDUIT.
29. CONTRACTOR SHALL APPLY FOR ALL UTILITY REBATE PROGRAMS ON BEHALF OF THE OWNER AS IT PERTAINS TO THE PROJECT.

GENERAL ELECTRICAL SPECIFICATIONS

1. ALL WIRE SHALL BE 600v RATED COPPER. WIRE SIZE #14 THRU #3/0 SHALL BE DUAL RATED TYPE THHN/THWN, #4/0 AND LARGER SHALL BE TYPE THHN/THWN OR XHHW. WIRE SIZE #14 THRU #10 SHALL BE SOLID, #8 AND LARGER SHALL BE STRANDED. ALL POWER WIRING FOR MECHANICAL EQUIPMENT SHALL BE A MINIMUM OF THREE (3) #10's. ALL CONTROL WIRING SHALL BE A MINIMUM OF TWO (2) #14's. ALL HOMERUNS IN EXCESS OF 100' FROM SOURCE SHALL BE A MINIMUM OF THREE (3) #10'S. ALL OTHER WIRING SHALL BE A MINIMUM OF THREE (3) #12's.
2. ALL CURRENT CARRYING MATERIAL USED SHALL BE COPPER, INCLUDING PANELBOARD BUS MATERIALS.
3. ALL NEW RACEWAY SHALL BE METALLIC OF SIZE AS NOTED ON THE DRAWINGS OR AS DICTATED BY THE CODES IN EFFECT. THE CONTRACTOR MAY CHOOSE TO INCREASE THE SIZE OF THE RACEWAY AT HIS DISCRETION BUT WITH NO ADDITIONAL COST TO THE OWNER. WHERE NOT SUSCEPTIBLE TO PHYSICAL DAMAGE, THE CONTRACTOR MAY CHOOSE TO RUN NM–B NON–METALLIC SHEATHED CABLE CONCEALED IN WALLS AND CEILINGS FOR BRANCH CIRCUITS. ALL BRANCH CIRCUIT WIRING SERVING LIGHTING SHALL BE EQUAL TO AFC MC LIMINARY CABLE WITH INTEGRAL TWISTED PAIR 0–10VDC CONTROL CONDUCTORS. EMT WITH COMPRESSION FITTINGS SHALL BE USED FOR EXPOSED BRANCH AND FEEDER CIRCUITS. MINIMUM CONDUIT SIZE SHALL BE 3/4". THE CONTRACTOR MAY CHOOSE TO RUN PVC JACKETED FIRE ALARM/CONTROL CABLE WHERE CONCEALED IN WALLS OR ABOVE CEILINGS.
4. ALL MATERIALS SHALL BE NEW AND U/L APPROVED/LABELED.
5. FURNISH AND INSTALL GROUNDING/BONDING BUSHINGS ONTO ALL CONDUIT ENTERING/LEAVING BOXES.
6. FURNISH AND INSTALL ALL LUGS FOR ANY AND ALL ELECTRICAL EQUIPMENT REQUIRED. INCLUDING OWNER FURNISHED EQUIPMENT.
7. INSTALL ALL RECEPTACLES FLUSH MOUNTED AT 18" A.F.F. AND LIGHT SWITCHES FLUSH MOUNTED AT 48" A.F.F. UNLESS NOTED OTHERWISE. DIMENSIONS SHALL BE TO CENTER OF DEVICE. CONTRACTOR SHALL COORDINATE WITH OTHER TRADES AND SHALL MODIFY MOUNTING HEIGHTS AND LOCATIONS AS DIRECTED BY THE ARCHITECT TO AVOID CONFLICTS WITH OTHER WORK.
8. ALL GROUND CONDUCTORS SHALL BE GREEN AND NEUTRAL CONDUCTORS SHALL BE WHITE.
9. CONTRACTOR SHALL PROVIDE ALL CONDUIT, WIRE, AND LABOR AS REQUIRED BY THE FIRE ALARM MANUFACTURER TO PROPERLY CONNECT THE DEVICES INDICATED ON THE DRAWINGS. FIRE ALARM SHOP DRAWING SUBMITTAL SHALL INCLUDE A RISER DIAGRAM AND COMPLETED BATTERY CALCULATIONS.
10. ALL POWER, LIGHT SWITCHING, DATA, SECURITY, AND FIRE ALARM DEVICES SHALL BE FLUSH MOUNTED WITH BACK BOX CONCEALED IN WALL. ALL AREAS WITH BLOCK OR MASONRY WALLS ONLY, CONTRACTOR SHALL FURNISH AND INSTALL SURFACE MOUNTED CAST ALUMINUM BACK BOXES WITH EMT CONDUIT SURFACE MOUNTED ON WALL. FIRE ALARM BACK BOXES SHALL BE PAINTED RED, ALL OTHERS SHALL BE PAINTED TO MATCH SURROUNDING WALL COLOR.
11. ALL FIRE ALARM WIRING SHALL BE CONCEALED IN WALLS OR ABOVE CEILINGS. CONTRACTOR SHALL SNAKE CONDUIT AND WIRE OR PVC JACKETED FIRE ALARM CABLE THROUGH WALLS TO NEW DEVICE LOCATIONS AS REQUIRED AND SHALL REPAIR ANY DAMAGE TO THE WALL OR CEILING TO MATCH SURROUNDING CONDITION.
12. NO WIRING PENETRATIONS SHALL BE PERMITTED INTO STAIRS EXCEPT CIRCUITS SERVING STAIR AREA.
13. FURNISH AND INSTALL A SETON #2060–20 PHENOLIC NAME PLATE, BLACK WITH WHITE 1/4" LETTERING FOR EACH DISCONNECT SWITCH AND STARTER ASSOCIATED WITH THIS PROJECT. LABEL SHALL STATE NAME OF EQUIPMENT, VOLTAGE, AND POWER SOURCE. CONFIRM ALL EQUIPMENT NAMES WITH OWNER STANDARDS.

ARCHITECT OF RECORD:
LDL STUDIO
ARCHITECT / HOSPITALITY DESIGNER
LDL STUDIO, INC.
106 Putnam Street
Providence, RI 02909
P: 401.274.4516
F. 401.421.2631
www.ldlstudio.com
Architect of Record: Gary M. Lepore, AIA

CERTIFICATION:
STATE OF CONNECTICUT · HP ENGINEERING CONSULTING ENGINEERS, P.C. · CORPORATE PRACTICE OF ENGINEERING

CONSULTANTS:
M/E/P & FP ENGINEER:
HP ENGINEERING CONSULTING ENGINEERS, P.C.
15 MAIDEN LANE
NORTH HAVEN, CT
P: 203–239–9425
JOHN PHILLIPS, P.E.

STRUCTURAL ENGINEER:
AMR ENGINEERING INC.
82 SCENIC DRIVE
WEST WARWICK , RI 02893
P: 401.559.3659
ANTHONY ROTONDO, P.E.

OWNER:
ROGER WILLIAMS PARK ZOO
ROGER WILLIAMS PARK ZOO
1000 ELMWOOD AVENUE
PROVIDENCE
RHODE ISLAND 02907

NUMBER	DATE	DESCRIPTION

REVISIONS:

PROJECT NAME:

RED PANDA EXHIBIT

RWPZ
1000 ELMWOOD AVENUE
PROVIDENCE
RHODE ISLAND 02907

SUBMISSION TYPE: PERMIT SET

PROJECT TYPE: NEW CONSTRUCTION

CLIENT NUMBER:

ISSUE DATE: NOVEMBER 14, 2022

SHEET NAME: **ELECTRICAL SPECIFICATIONS & LEGENDS**

DRAWING SCALE:

PROJECT NUMBER: 2022-03

DATE ISSUED: 11/14/2022

RP–E4

GREEN LDL STUDIO GOALS

© 2022 LDL STUDIO INC.