EDUCATION CENTER AND PAVILION

FOR THE

ROGER WILLIAMS PARK ZOO

PROVIDENCE, RHODE ISLAND



ARCHITECTS
SACCOCCIO & ASSOCIATES, INC.
1085 PARK AVENUE CRANSTON, RI 02910

Garofalo & Associates, Inc.
CIVIL ENGINEERING & SURVEYING

C.A.Pretzer Associates Inc.
STRUCTURAL

Engineering Design Services
MECHANICAL, ELECTRICAL, PLUMBING
AND FIRE PROTECTION ENGINEERS

ISSUED FOR BID
AUGUST 19, 2024

LIST OF DRAWINGS

GENERAL

G0.0	PROJECT REFERENCE PLAN
G1.0	EDUCATION CENTER CODE & BUILDING PERFORMANCE
G1.1	EVENT PAVILION CODE PLAN
G2.0	GENERAL MOUNTING HEIGHTS, GENERAL NOTES
G2.1	WALL TYPES

CIVIL

C-1.0	GENERAL NOTES & LEGEND
C-2.0	OVERALL PLAN
C-3.0	DEMOLITION PLAN
C-4.0	SITE PLAN
C-5.0	GRADING & DRAINAGE PLAN
C-6.0	UTILITIES PLAN
C-7.0	SOIL EROSION & SEDIMENT CONTROL PLAN
C-8.0	CONSTRUCTION DETAILS-1
C-8.1	CONSTRUCTION DETAILS-2
C-8.2	CONSTRUCTION DETAILS-3
C-8.3	CONSTRUCTION DETAILS-4
C-8.4	CONSTRUCTION DETAILS-5

LANDSCAPE

A-L1.0	MATERIALS & LAYOUT PLAN
A-L1.1	DETAILS
A-L1.2	DETAILS
A-L1.3	DETAILS
A-L1.4	LANDSCAPE PLAN
A-L1.5	LANDSCAPE DETAILS & SCHEDULES
B-L1.0	MATERIALS & LAYOUT PLAN
B-L1.1	LANDSCAPE PLAN

MEP / FP - BUILDINGS A & B

M0.0	MECHANICAL LEGENDS & NOTES
M3.1	MECHANICAL SCHEDULES
M3.2	MECHANICAL SCHEDULES
M4.1	MECHANICAL DETAILS
M4.2	MECHANICAL DETAILS
M4.3	MECHANICAL DETAILS
P0.0	PLUMBING LEGEND, GENERAL NOTES, SCHEDULES AND DIAGRAMS
FP0.0	FIRE PROTECTION LEGEND GENERAL NOTES, AND DIAGRAMS
E0.0	ELECTRICAL LEGENDS & NOTES
E0.1	ELECTRICAL ONE-LINE DIAGRAM & SCHEDULES
E0.2	ELECTRICAL ONE-LINE DIAGRAM & SCHEDULES
E0.3	ELECTRICAL LIFE SAFETY DIAGRAMS & LEGENDS
E0.4	ELECTRICAL LIGHTING CONTROL DIAGRAMS
E0.5	ELECTRICAL SCHEDULES & NOTES
E0.6	ELECTRICAL DETAILS
E51.1	ELECTRICAL SITE PLAN
E51.2	ELECTRICAL SITE PLAN-LIGHTING

BUILDING A - EDUCATION CENTER

A-A1.0	FOUNDATION PLAN
A-A1.1	LOWER LEVEL FLOOR PLAN
A-A1.2	UPPER LEVEL FLOOR PLAN
A-A1.3	ENLARGED PLANS & DETAILS
A-A2.0	EXTERIOR ELEVATIONS
A-A2.1	EXTERIOR ELEVATIONS
A-A3.0	BUILDING SECTIONS
A-A3.1	BUILDING SECTIONS
A-A3.2	WALL SECTIONS & DETAILS
A-A3.3	WALL SECTIONS
A-A3.4	SECTIONS
A-A3.5	MISCELLANEOUS DETAILS
A-A4.0	STAIR AND ELEVATOR PLANS AND SECTIONS
A-A5.0	ROOF PLAN & DETAILS
A-A5.1	ROOF DETAILS
A-A5.2	PV PANEL ROOF ATTACHMENT DETAIL
A-A6.0	DOOR SCHEDULE
A-A6.1	DOOR & FRAME TYPES
A-A6.2	DOOR & WINDOW DETAILS
A-A6.3	WINDOW TYPES
A-A7.0	INTERIOR ELEVATIONS
A-A7.1	INTERIOR ELEVATIONS
A-A7.2	INTERIOR ELEVATIONS
A-A7.3	INTERIOR ELEVATIONS
A-A7.4	INTERIOR ELEVATIONS
A-A7.5	INTERIOR ELEVATIONS
A-A7.6	INTERIOR ELEVATIONS
A-A8.0	REFLECTED CEILING PLAN
A-A9.0	FINISH & LIGHT FIXTURE SCHEDULE
A-A9.1	FINISH PLANS
A-A9.2	FURNITURE PLANS
A-A10.0	MILLWORK & CASEWORK SECTIONS & DETAILS
A-A10.1	MILLWORK & CASEWORK SECTIONS & DETAILS

STRUCTURAL - BUILDING A

S0.1	DESIGN LOADS & GENERAL NOTES
S0.2	SPECIAL INSTRUCTIONS
A-S1.1	FOUNDATION PLAN
A-S1.2	UPPER LEVEL & LOW ROOF FRAMING PLAN
A-S1.3	ROOF FRAMING PLAN
A-S2.0	FOUNDATION SECTIONS AND DETAILS
A-S2.1	BASEPLATE AND MASONRY DETAILS
A-S3.0	STEEL FRAMING SECTIONS AND DETAILS
A-S3.1	SECTIONS AND DETAILS
A-S4.0	LOWER LEVEL SHEAR WALL PLAN
A-S4.1	SHEAR WALL PLANS

MECHANICAL - BUILDING A

A-M1.1	MECHANICAL EDUCATION CENTER LOWER LEVEL FLOOR PLAN
A-M1.2	MECHANICAL EDUCATION CENTER UPPER LEVEL PLAN
A-M1.3	MECHANICAL EDUCATION CENTER ROOF PLAN
A-M2.1	MECHANICAL EDUCATION CENTER LOWER LEVEL PIPING PLAN
A-M2.2	MECHANICAL EDUCATION CENTER UPPER LEVEL PIPING PLAN

PLUMBING - BUILDING A

A-P1.0A	PLUMBING EDUCATION BLDG UNDERSLAB PART PLAN A
A-P1.0B	PLUMBING EDUCATION BLDG UNDERSLAB PART PLAN B
A-P1.1A	PLUMBING EDUCATION BLDG LOWER LEVEL PART PLAN A
A-P1.1B	PLUMBING EDUCATION BLDG LOWER LEVEL PART PLAN B
A-P1.2	PLUMBING EDUCATION BLDG UPPER LEVEL FLOOR PLAN
A-P1.3	PLUMBING EDUCATION BLDG ROOF PLAN

FIRE PROTECTION - BUILDING A

A-FP1.0	FIRE PROTECTION EDUCATION CENTER FLOOR PLANS

ELECTRICAL - BUILDING A

A-E1.1	ELECTRICAL LOWER LEVEL FLOOR PLAN - LIGHTING
A-E1.2	ELECTRICAL UPPER LEVEL FLOOR PLAN - LIGHTING
A-E2.1	ELECTRICAL LOWER LEVEL FLOOR PLAN - POWER & SIGNAL
A-E2.2	ELECTRICAL UPPER LEVEL FLOOR PLAN - POWER & SIGNAL
A-E2.3	ELECTRICAL ROOF PLAN
A-E2.4	ELECTRICAL ELEVATOR PART PLAN & NOTES

BUILDING B - EVENT PAVILION

B-A1.0	FOUNDATION PLAN
B-A1.1	1st FLOOR PLAN
B-A1.2	FURNITURE PLAN
B-A2.1	EXTERIOR ELEVATIONS
B-A2.2	3D VIEWS
B-A3.0	BUILDING SECTIONS
B-A3.1	WALL SECTIONS AND DETAILS
B-A5.0	ROOF PLAN & DETAILS
B-A6.0	DOOR, WINDOW & FINISH SCHEDULES
B-A7.0	INTERIOR ELEVATIONS
B-A8.0	REFLECTED CEILING PLAN

MECHANICAL - BUILDING B

B-M1.1	MECHANICAL PAVILION DUCTWORK PLANS

PLUMBING - BUILDING B

B-P1.0	PLUMBING PAVILION UNDERSALB PLAN
B-P1.1	PLUMBING PAVILION PART PLANS, NOTES AND SCHEDULES

FIRE PROTECTION - BUILDING B

B-FP1.0	FIRE PROTECTION PAVILION FLOOR PLAN

ELECTRICAL - BUILDING B

B-E3.1	ELECTRICAL LOWER LEVEL FLOOR PLAN - LIGHTING
B-E3.2	ELECTRICAL LOWER LEVEL FLOOR PLAN - POWER & SIGNAL

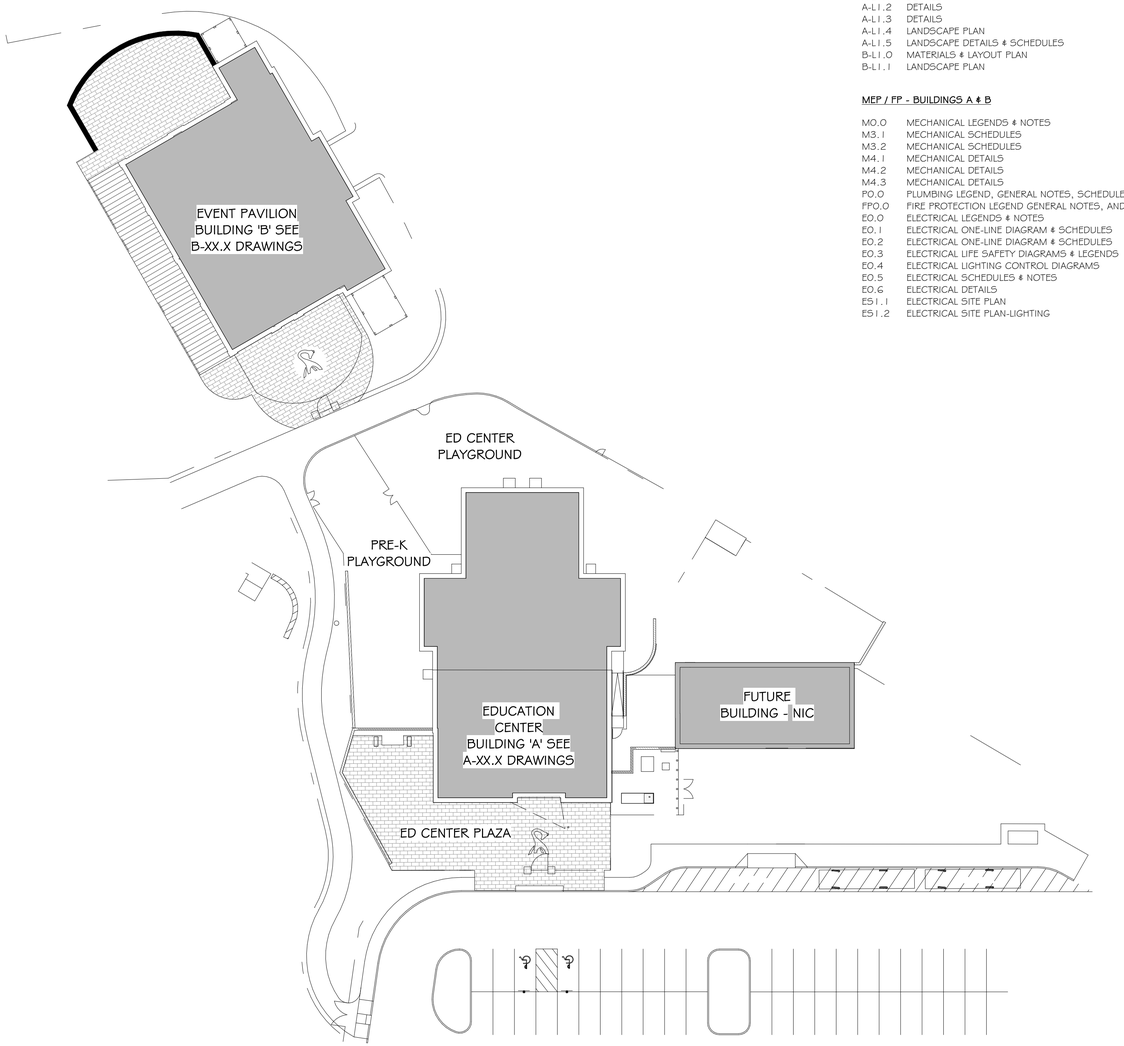

1 G0.0 REFERENCE PLAN

1" = 30'-0"

PROJECT ELEVATION REFERENCES:

LEVEL	SURVEY ELEVATION	PROJECT ELEVATION
FIRST FLOOR LEVEL BLDG 'B' (EVENT PAVILION)	34' - 4"	-0' - 8"
LOWER LEVEL BLDG 'A' (EDUCATION CENTER)	35' - 0"	0' - 0"
TOP OF WALL @ SHED ROOF (EVENT PAVILION)	42' - 11"	7' - 11"
UPPER LEVEL BLDG 'A' (EDUCATION CENTER)	47' - 0"	12' - 0"
TOP OF PLATE 'D' (EDUCATION CENTER)	48' - 6"	13' - 6"
TOP OF PLATE 'A' (EDUCATION CENTER)	56' - 9"	21' - 9"
TOP OF PLATE 'B' (EDUCATION CENTER)	58' - 0"	23' - 0"
TOP OF PLATE 'C' (EDUCATION CENTER)	59' - 2 3/4"	24' 2 3/4"

ARCHITECTS

Saccoccio & Associates, Inc.

1085 Park Avenue
Cranston, Rhode Island
02910

tel 401.942.7970
fax 401.942.7975

Consultant

ROGER WILLIAMS PARK ZOO EDUCATION CENTER & PAVILION

ROGER WILLIAMS PARK ZOO

1000 ELMWOOD AVENUE,
PROVIDENCE, RI 02907

Revision Schedule	
Revision Number	Revision Date

ISSUED FOR BID
AUGUST 19, 2024

SHEET TITLE

PROJECT REFERENCE PLAN

DRAWN BY:	KR	JOB NUMBER:	18050
CHECKED BY:	MS	DATE:	08-19-2024

G0.0

SHEET: OF:

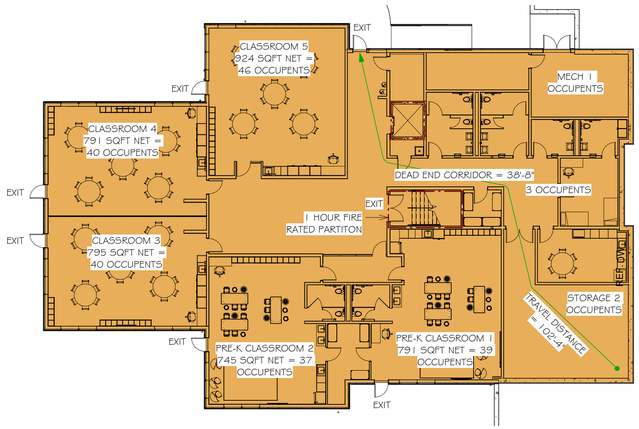

1 G1.0

LOWER FLOOR PLAN

1/16" = 1'-0"

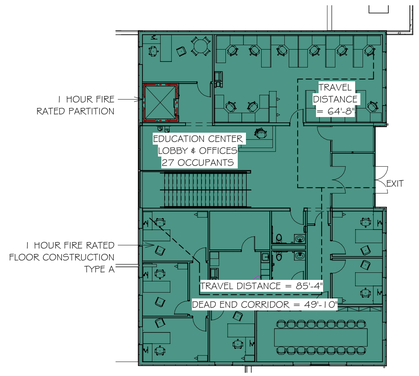

2 G1.0

UPPER LEVEL FLOOR PLAN

1/16" = 1'-0"

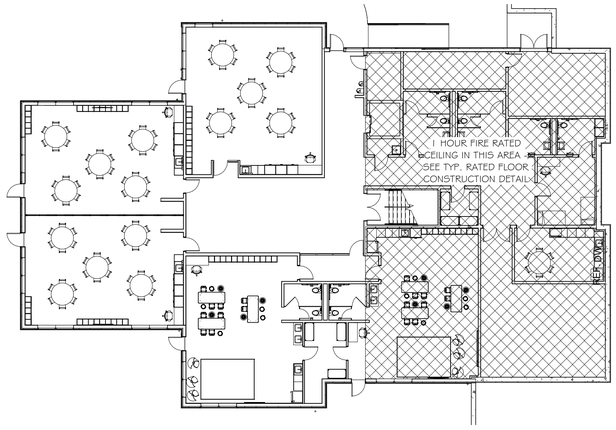

3 G1.0

LOWER FLOOR PLAN

1/16" = 1'-0"

EDUCATION CENTER BUILDING ENERGY CONSERVATION REQUIREMENTS (TYP. UNLESS NOTED OTHERWISE ON DRAWINGS:

- ROOF INSULATION - MINIMUM R-60 (R-40 CONTINUOUS & R-20 FOAMED IN PLACE)
- EXTERIOR WALL INSULATION - MINIMUM R-40 (R12 CONTINUOUS & R-28 FOAMED IN PLACE)
- EXTERIOR FOUNDATION INSULATION - MINIMUM R-15 (3" RIGID INSULATION)
- BELOW SLAB ON GRADE - MINIMUM R-20 (4" RIGID INSULATION)
- BETWEEN UPPER & LOWER LEVEL - MINIMUM R-20
- WALLS BETWEEN ANIMAL HOLDING ROOMS - MINIMUM R-20
- ALLOWABLE AIR LEAKAGE - 0.10 CFM AT 75 PASCALS TEST PRESSURE PER SQ. FT. OF BUILDNIG ENCLOSURE

FIRE SAFETY LEGEND

1. SEE DRAWING A501 FOR WALL TYPES AND DETAILS.

- 199' — TRAVEL DISTANCE
- 49' — ACCESS AISLE TRAVEL DISTANCE
- (0) — ACTUAL OCCUPANT LOAD
- 000 / 000 — EGRESS CAPACITY - ACTUAL / EGRESS CAPACITY - ALLOWABLE
- SMOKE PARTITION
- 1 HR PARTITION

PROJECT DESCRIPTION

Education Center: 2- story 13,469 square feet including: office area, two Pre-k classrooms, three classrooms, and storage spaces all protected by automated sprinkler system. Event Pavilion: 7,000 square feet including: event space, kitchen, toilet rooms and storage. Demolition of an existing 2,600 square foot green house. Modifications to the existing zoo parking and zoo walking paths.

CODE INFORMATION

CODE LIST:

- International Building Code, 2018 Edition, with Rhode Island Amendments SBC-1, 2021
- International Plumbing Code, 2018 Edition, with Rhode Island Amendments SBC-3, 2021
- International Mechanical Code, 2018 Edition, with Rhode Island Amendments SBC-4, 2021
- International Electric Code, 2018 Edition, with Rhode Island Amendments SBC-5, 2021
- International Energy Conservation Code, 2018 Edition, with Rhode Island Amendments SBC-8, 2021
- ICC/ ANSI A117.1 - 2009, Accessible and Usable Buildings and Facilities
- NFPA-1 Fire Code, 2018 Edition, with Rhode Island Fire Code
- NFPA-101 Life Safety Code, 2018 Edition, with Rhode Island Fire Safety Code
- NFPA-150 Fire and Life Safety in Animal Housing Facilities Code, 2018 Edition

- Rhode Island Regulations School Age Programs: 214-RICR-40-00-1
- Rhode Island Food Code: 216-RICR-50-10-1
- Rhode Island Regulations Governing Animal Care Facilities: 250-RICR-40-05-4
- Rhode Island Elevator Safety Code: 260-RICR-30-10-1

- U.S. Department of Agriculture "Animal Welfare Act and Animal Welfare Regulations" 2017

BUILDING CODE:

SECTION 3 - USE AND OCCUPANCY CLASSIFICATIONS
- Education Center: Business B (304.1), Education E (305.1) (Nonseparated Occupancy 508.3), Day Care classified as Education E Occupancy SBC-1 305.2.

SECTION 503 - ALLOWABLE HEIGHT / STORIES / AREAS

	Allowable	Actual
• Education Center: 5-B	40 feet height	39 feet height
Nonseparated E:	2 stories	2 stories
(sprinklered)	38,000 sf	13,469 sf

SECTION 602 - CONSTRUCTION CLASSIFICATION
- Construction Type = Type VB

TABLE 601 - FIRE RESISTANCE RATING BUILDING ELEMENTS 5-B

	Education Center
• Structural Frame =	0 hr
• Exterior Bearing Walls =	0 hr
• Interior Bearing Walls =	0 hr
• Nonbearing exterior walls =	0 hr
• Nonbearing interior walls =	0 hr
• Floor Construction =	1 hr
• Roof Construction =	0 hr
• Elevator Shaft Enclosure =	1 hr (713.4)
• Corridor Wall =	0 hr (Table 1018.1, 1018.1-1)

TABLE 803.9 - INTERIOR WALL AND CEILING FINISH

	EXIT	CORRIDOR	ROOMS
Education Center: (with automatic sprinkler system)			
• B:	B	C	C
• E:	B	C	C

SECTION 804.4.2 - FLOOR FINISH

	EXIT & CORRIDOR
Education Center: (with automatic sprinkler system)	
• B, E	Class II and DOC-FF-1

TABLE 1004.1.2 - OCCUPANT LOAD
Education Center-Lower Level: E (education)
- E: 76 occupants/Pre-K + 126 occupants/Classrooms + 3 occupants/Offices + 3 occupants/Storage/Mech = 208 occupants

Education Center-Upper Level: B (business) offices
- B: 27 occupants

TABLE 1005.3.2 - EGRESS SIZE

	Required	Provided
• Education Center - Lower Level:	42 inches	198 inches
• Education Center - Upper Level:	6 inches	69 inches

TABLE 1014.3 - COMMON PATH OF TRAVEL
- Education Center: E - 75 feet, B - 100 feet (sprinkled)

TABLE 1016.2 - TRAVEL DISTANCE TO AN EXIT
- Education Center: Max 250 feet (sprinkled)

SECTION 1020.4 - DEAD END CORRIDORS
Education Center: (with automatic sprinkler system)
- Exception 2: 50 feet maximum

SECTION 11 - ACCESSIBILITY
Education Center: building shall comply with accessibility requirements.

FIRE CODE

CLASSIFICATIONS OF OCCUPANCY: Chapt 6
- Education Center: Mixed Use Occupancy 6.1.14.2.2 including New Education Chapt 14 and New Business 38.

CORRIDORS: EXIT ACCESS: Chapt 7
Chapter 14 New Education Occupancy
- Fire resistant walls not required

Chapter 38 New Business Occupancy
- Fire resistant walls not required

STAIRS / VERTICAL OPENINGS: Chapt 8
Chapter 14 New Education Occupancy
- Unprotected stair enclosure

Chapter 38 New Business Occupancy
- Stair enclosure not required

FINISHES: WALLS & CEILINGS: Chapt 10
Chapter 14 New Education Occupancy
- Finishes: Wall & Ceilings Exits - Class A, other Class A or B

Chapter 38 New Business Occupancy
- Finishes: Wall & Ceilings Exits - Class A or B, other Class A or B or C

FINISHES: FLOORS: Chapt 10
Chapter 14 New Education Occupancy
- Finishes: Floor Exits - Class II

Chapter 38 New Business Occupancy
- Finishes: Floors: Exits - Class I or II

NEW EDUCATION: Chapt 14 - Education Center
- Travel Distance 200 feet, sprinkled 14.2.6.3
- Rescue window not required, automatic sprinkler system and door directly to exterior
- Storage walls smoke partitions
- Warming Kitchen - residential type cooking equipment protection not required

NEW BUSINESS: Chapt 38 - Education Center
- Travel Distance 300 feet, sprinkled
- Vertical openings / stairway unenclosed
- Corridor unseparated by fire barriers, automatic sprinkler system

ENERGY CONSERVATION CODE:

CLIMATE ZONE: Chapt 3
Zone 5, Providence County

COMMERCIAL ENERGY EFFICIENCY: Chapt 4

Low slope roof SRI =	82
Roof R-value =	25ci or 38 in attic
Walls R-value =	20 plus 3.8ci
Walls below grade R-value =	7.5ci
Floors R-value =	30
Slab on Grade R-value =	10 for 24" below
Window fixed/operable R-value =	2.63 / 2.22
Entrance door R-value =	1.3
Skylights R-value =	1.33 auto light controls
SHGC windows, doors =	0.40
SHGC skylights =	0.75 auto light controls

Education Center: lower level vestibules not required C402.4.7 (4)

PLUMBING FIXTURES: TABLE 2902.1
(Pre-School: Rhode Island Regulations School Age Programs: 214-RICR-40-00-1)

	Education Center Lower Level		Education Center Upper Level	
	Required	Proposed	Required	Proposed
• Water Closet (Male)	5 (M+F)	10 (M+F)	2 (M+F)	2 (M+F)
• Water Closet (Female)				
• Lavatories (Male)	5 (M+F)	10 (M+F)	2 (M+F)	2 (M+F)
• Lavatories (Female)				
• Drinking Fountains	2	2 (standing + wheelchair)	1	1 (standing + wheelchair)

ARCHITECTS

Saccoccio & Associates, Inc.
1085 Park Avenue
Cranston, Rhode Island
02910
tel 401.942.7970
fax 401.942.7975

Consultant

ROGER WILLIAMS PARK ZOO EDUCATION CENTER & PAVILION

ROGER WILLIAMS PARK ZOO

1000 ELMWOOD AVENUE,
PROVIDENCE, RI 02907

Revision Schedule	
Revision Number	Revision Date

ISSUED FOR BID
AUGUST 19, 2024

SHEET TITLE

EDUCATION CENTER CODE & BUILDING PERFORMANCE

DRAWN BY:	KR	JOB NUMBER:	18050
CHECKED BY:	MS	DATE:	08-19-2024

G1.0

SHEET: OF:

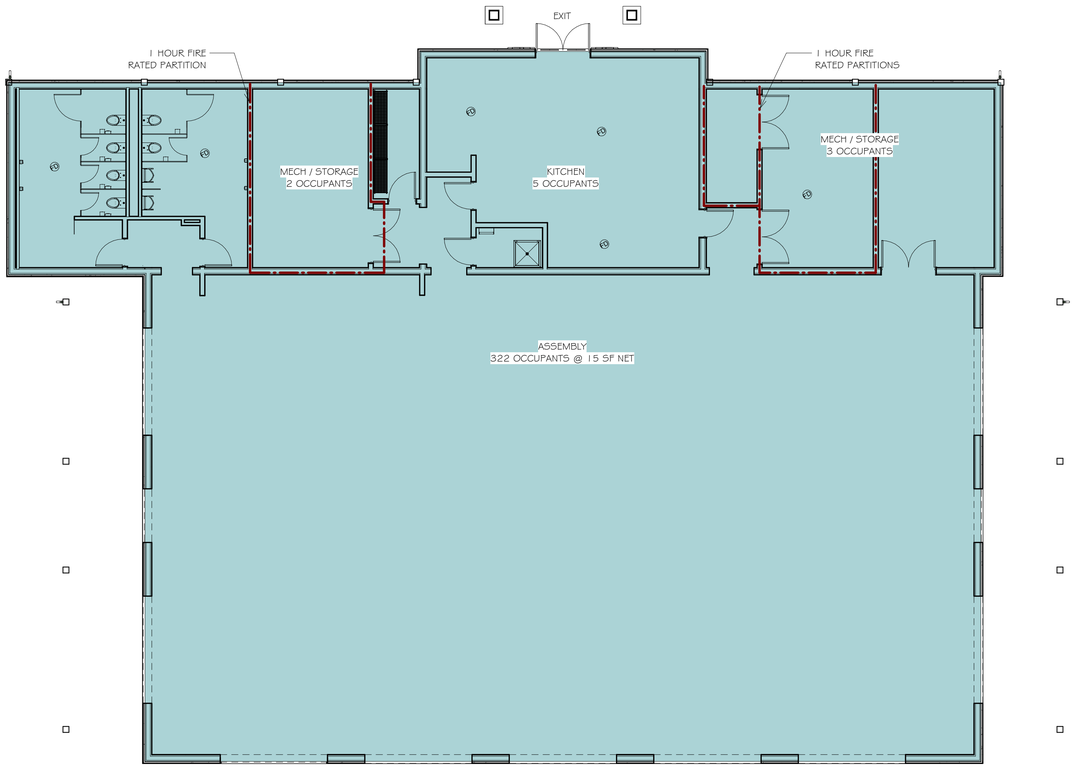

1 G1.1 FLOOR PLAN

1/8" = 1'-0"

PROJECT DESCRIPTION

Education Center: 2- story 13,469 square feet including: office area, two Pre-k classrooms, three classrooms, and storage spaces all protected by automated sprinkler system. Event Pavilion: 7,000 square feet including: event space, kitchen, toilet rooms and storage. Demolition of an existing 2,600 square foot green house. Modifications to the existing zoo parking and zoo walking paths.

CODE INFORMATION

CODE LIST:

- International Building Code, 2018 Edition, with Rhode Island Amendments SBC-1, 2021
- International Plumbing Code, 2018 Edition, with Rhode Island Amendments SBC-3, 2021
- International Mechanical Code, 2018 Edition, with Rhode Island Amendments SBC-4, 2021
- International Electric Code, 2018 Edition, with Rhode Island Amendments SBC-5, 2021
- International Energy Conservation Code, 2018 Edition, with Rhode Island Amendments SBC-8, 2021
- ICC/ ANSI A117.1 - 2009, Accessible and Usable Buildings and Facilities
- NFPA-1 Fire Code, 2018 Edition, with Rhode Island Fire Code
- NFPA-101 Life Safety Code, 2018 Edition, with Rhode Island Fire Safety Code
- NFPA-150 Fire and Life Safety in Animal Housing Facilities Code, 2018 Edition

- Rhode Island Regulations School Age Programs: 214-RICR-40-00-1
- Rhode Island Food Code: 216-RICR-50-10-1
- Rhode Island Regulations Governing Animal Care Facilities: 250-RICR-40-05-4
- Rhode Island Elevator Safety Code: 260-RICR-30-10-1

- U.S. Department of Agriculture "Animal Welfare Act and Animal Welfare Regulations" 2017

BUILDING CODE:

SECTION 3 - USE AND OCCUPANCY CLASSIFICATIONS
- Event Pavilion: Assembly A-2 (303.3)

SECTION 503 - ALLOWABLE HEIGHT / STORIES / AREAS

	Allowable	Actual
• Event Pavilion: 5-B	60 feet height	30 feet height
	2 stories	1 stories
	24,000 sf	7,575 sf

SECTION 602 - CONSTRUCTION CLASSIFICATION
- Construction Type = Type VB

TABLE 601 - FIRE RESISTANCE RATING BUILDING ELEMENTS 5-B

	Event Pavilion
• Structural Frame	0 hr
• Exterior Bearing Walls	0 hr
• Interior Bearing Walls	0 hr
• Nonbearing exterior walls	0 hr
• Nonbearing interior walls	0 hr
• Floor Construction	0 hr
• Roof Construction	0 hr

TABLE 803.9 - INTERIOR WALL AND CEILING FINISH

	EXIT	CORRIDOR	ROOMS
Event Pavilion:			
• A-2:	B	B	C

SECTION 804.4.2 - FLOOR FINISH

	EXIT & CORRIDOR
Event Pavilion:	
• A-2	Class II

TABLE 1004.1.2 - OCCUPANT LOAD

Event Pavilion: A-2 non-fixed seating/ Kitchen/ Mech-Stor
- A-2: 322 occupants/ K: 5 occupants/ M: 5 occupants = 332 occupants

TABLE 1005.3.2 - EGRESS SIZE

	Required	Provided
• Event Pavilion:	67 inches	1,506 inches

TABLE 1016.2 - TRAVEL DISTANCE TO AN EXIT

Event Pavilion: Max 200 feet

SECTION 11 - ACCESSIBILITY
- Event Pavilion: building shall comply with accessibility requirements

FIRE CODE

CLASSIFICATIONS OF OCCUPANCY: Chapt 12
- Event Pavilion: New Assembly

FINISHES: WALLS & CEILINGS:

Chapter 12 New Assembly Occupancy
- Finishes: Wall & Ceilings Exits - Class A or B, other Class A or B or C

FINISHES: FLOORS:

Chapter 14 New Assembly Occupancy
- Finishes: Floor Exits - Class II

NEW ASSEMBLY A-2: Chapt 12 - Pavilion
- Construction Type V-000, sprinklered -Table 12.1.6
- Table Storage: low combustibility materials, rated walls not required 12.3.2.1.1

ENERGY CONSERVATION CODE:

CLIMATE ZONE: Chapt 3

Zone 5, Providence County

COMMERCIAL ENERGY EFFICIENCY: Chapt 4

Low slope roof SRI =	82
Roof R-value =	25ci or 38 in attic
Walls R-value =	20 plus 3.8ci
Walls below grade R-value =	7.5ci
Floors R-value =	30
Slab on Grade R-value =	10 for 24" below
Window fixed/operable R-value =	2.63 / 2.22
Entrance door R-value =	1.3
Skylights R-value =	1.33 auto light controls
SHGC windows, doors =	0.40
SHGC skylights =	0.75 auto light controls

FIRE SAFETY LEGEND

1. SEE DRAWING A501 FOR WALL TYPES AND DETAILS.

- 199' — TRAVEL DISTANCE
- 49' — ACCESS AISLE TRAVEL DISTANCE
- (0) — ACTUAL OCCUPANT LOAD
- 000 / 000 — EGRESS CAPACITY - ACTUAL / EGRESS CAPACITY - ALLOWABLE
- SMOKE PARTITION
- 1 HR PARTITION

PLUMBING FIXTURES: TABLE 2902.1

	Event Pavilion Required	Proposed
• Water Closet (Male)	3	4
• Water Closet (Female)	3	4
• Lavatories (Male)	1	3
• Lavatories (Female)	1	3
• Drinking Fountains	1	1

ARCHITECTS

Saccoccio & Associates, Inc.

1085 Park Avenue
Cranston, Rhode Island
02910

tel 401.942.7970
fax 401.942.7975

Consultant

ROGER WILLIAMS PARK ZOO EDUCATION CENTER & PAVILION

ROGER WILLIAMS PARK ZOO

1000 ELMWOOD AVENUE,
PROVIDENCE, RI 02907

Revision Schedule	
Revision Number	Revision Date

ISSUED FOR BID
AUGUST 19, 2024

SHEET TITLE

EVENT PAVILION CODE PLAN

DRAWN BY:	KR	JOB NUMBER:	18050
CHECKED BY:	MS	DATE:	08-19-2024

G1.1

SHEET: OF:

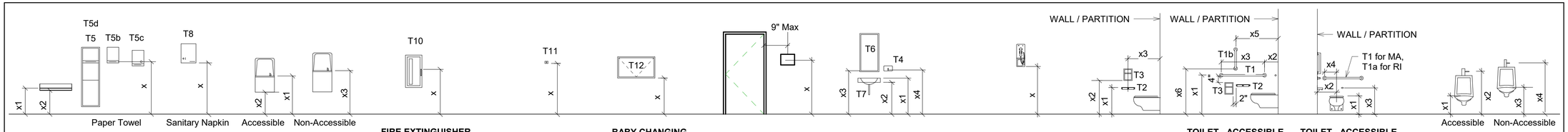

COUNTER
x1 - 28" - 34"
x2 - 27" Knee Clearance

DISPENSERS /DISPOSAL
x - 15" - 48" Front approach
48" - 54" Side Approach

DRINKING FOUNTAINS
x1 - Accessible - 36" Max To Spout
x2 - 27" Knee / 9" Toe Clearance
x3 - Standing - 38"-43"

FIRE EXTINGUISHER CABINET
x - 48" max. to top of the handle
Must not project more than 4"

ROBE HOOK
x - 48" Accessible
60" non-accessible

BABY CHANGING STATION
x - 2'-10"

SIGNAGE
x - 48-60" To Braille AFF
(mount on latch side)

SINK & ACCESSORIES
x1 - 34" Max To Rim
x2 - 27" Min. b.o. Apron / 9" Toe Clearance
x3 - 40" To bottom of reflective surface
x4 - 34" - 48" to dispensing nozzle

TELEPHONE
x - 34" Min. AFF to lowest operable part

TOILET - TYP.

TOILET - ACCESSIBLE WITH GRAB BARS
x1 - 33"-36"
x2 - 12" Max.
x3 - 42" Min.
x4 - reserved
x5 - 39" - 41"
x6 - 39" - 41"

TOILET - ACCESSIBLE WITH GRAB BARS
x1 - 17" - 19" (top of seat)
x2 - 16" - 18" away from side wall
x3 - 36" to flush control on open side
x4 - 12 Min.

URINALS
x1 - 17" Handicap
x2 - 46" Max. Flush Control
x3 - 25" Standing
x4 - 54" Max. Flush Control

TYPICAL ADULT MOUNTING HEIGHTS

SCALE: 1/4" = 1'0"

Typical - ADA & Non-ADA Mounting Heights For Children

	Toddler *Ages 1-2*	Pre-Kindergarten *Ages 3-5*	Grades K - 3 *Ages 5-8*	Grades 4-6 *Ages 9-11*
Controls or Operating Mechanisms:	**x -** 20"-28"	**x -** 20"-36"	20"-36"	20"-36"
Counters:	**x1 -** 18"-26" (non ADA) **x1 -** 26"-30" **x2 -** 24" Knee Clearance	**x1 -** 18"-30" (non ADA) **x1 -** 26"-30" **x2 -** 24" Knee Clearance	23"-30" (non ADA) 26"-30" 24" Knee Clearance	26"-30" (non ADA) 26"-30" 24" Knee Clearance
Drinking Fountains:	**x1 -** 18"-26" (non ADA) **x1 -** 30" Max. To Spout **x2 -** 27" Knee Clearance 9" Toe Clearance	**x1 -** 30" Max. To Spout **x1 -** 18"-30" (non ADA) **x2 -** 27" Knee Clearance 9" Toe Clearance	30" Max. To Spout 23"-30" (non ADA) 27" Knee Clearance 9" Toe Clearance	30" Max. To Spout 26"-30" (non ADA) 27" Knee Clearance 9" Toe Clearance
Grab Bars: *(top of gripping surface)*	**x1 -** 18"-20" (1" Diameter)	**x1 -** 18"-20" (1" Diameter)	20"-25" (1 1/4" - 1 1/2" Diameter)	25"-27" (1 1/4" - 1 1/2" Diameter)
Lavatories:	**x1 -** 18" Recommended (non ADA) **x1 -** 30" Max to Rim **x2 -** 25" min b.o. apron 24" Min. Knee Clearance 12" Toe Clearance	**x1 -** 18"-30" (non ADA) **x1 -** 30" Max to Rim **x2 -** 25" Min. b.o. Apron 24" Min. Knee Clearance 12" Toe Clearance	23"-30" (non ADA) 30" Max to Rim 25" Min. b.o. Apron 24" Min. Knee Clearance 12" Toe Clearance	26"-30" (non ADA) 30" Max to Rim 25" Min. b.o. Apron 24" Min. Knee Clearance 12" Toe Clearance
Mirrors: *(to bottom of reflective surface) recommendation: 2"-4" above lavatory*	**x3** - 34" Max. To Bottom Edge	**x3** - 34" Max. To Bottom Edge	34" Max. To Bottom Edge	34" Max. To Bottom Edge
Hooks:	**x** - 28"	**x -** 36"	36"	36"
Seating:	**x1** - 6"-10"	**x1 -** 8"-12"	12"-17"	12"-17"
Signage: *(mount on latch side)*	**x** - 60" On Center	**x** - 60" On Center	60" On Center	60" On Center
Soap Dispensers: *(to dispensing nozzle) recommendation: lavatory height or higher*	**x4** - 15"-28" (ADA & non ADA)	**x4** - 15"-48" (ADA & non ADA)	15"-48"(ADA & non ADA)	15"-48" (ADA & non ADA)
Toilet Paper Dispensers:	**x1 -** 14"	**x1 -** 14"	14"-17"	17"-19"
Urinals:	**n/a**	**R3 -** 14" **R4 -** 30" Flush Control	14" 30" Flush Control	14" 30" Flush Control
Water Closets: *(top of seat) (wall to centerline)*	**x1 -** 12" **x2 -** 11" Away From Side Wall	**x1 -** 12" **x2 -** 11" Away From Side Wall	12"-15" 11"-15" Away From Side Wall	15"-17" 15"-18" Away From Side Wall

ACCESSORY SCHEDULE

T1 - 42" GRAB BAR
T1a - 36" GRAB BAR
T1b - 18" GRAB BAR
T2 - TOILET PAPER HOLDER
T3 - SANITARY NAPKIN DISPOSAL
T4 - SOAP DISPENSER
T5 - FULLY RECESSED PAPER TOWEL DISPOSAL/DISPENSER *(LARGE)*
T5a - FULLY RECESSED PAPER TOWEL DISPENSER
T5b - SURFACE-MOUNTED PAPER TOWEL DISPENSER
T5c - ELECTRIC HAND DRYER
T5d - FULL RECESSED PAPER TOWEL DISPOSAL/DISPENSER *(SMALL)*
T6 - MIRROR, 18" x 30"
T7 - ADA PIPE COVER
T8 - SANITARY NAPKIN DISPENSER *(NOT USED)*
T9 - MARKER BOARD
T10 - FIRE EXTINGUISHER CABINET
T11 - COAT/ROBE HOOKS
T12 - BABY CHANGING STATION
T13 - MOP HOLDER



NOTE:
PROVIDE REQUIRED FIRE-RETARDANT WOOD BLOCKING WITHIN WALLS, FLOORS AND CEILINGS FOR PROPER INSTALLATION OF ALL WALL, FLOOR AND CEILING MOUNTED MARKER BOARDS, TELEVISIONS/MONITORS, PROJECTOR SCREENS, WALL CABINETS, RESTROOM AND KITCHEN ACCESSORIES AND CASEWORK, TRIM SUCH AS CHAIR RAILS/CROWN MOLDING/BASE/ETC., ELECTRONIC AND OTHER EQUIPMENT. ALSO SEE SPECIFICATIONS FOR OTHER BLOCKING REQUIREMENTS.

ARCHITECTURAL SYMBOLS LEGEND

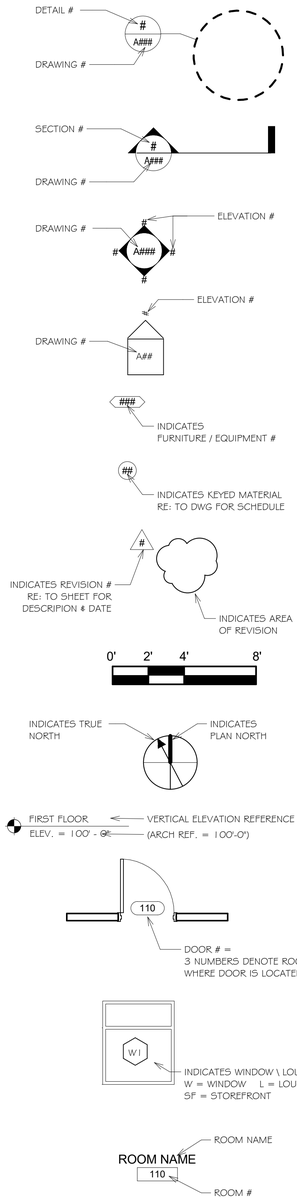

GENERAL NOTES:

THE CONTRACTOR/S SHALL:

1. UNDERSTAND THAT THE TERM "PROVIDE" AS LISTED ON THE ARCHITECTURAL DRAWINGS SHALL MEAN "FURNISH AND INSTALL".
2. UNDERSTAND THAT UNLESS SPECIFICALLY NOTED AS "PROVIDED BY OTHERS" OR "PROVIDED BY OWNER", ALL WORK IN THESE CONTRACT DOCUMENTS IS TO BE PERFORMED BY THE GENERAL CONTRACTOR AND/OR THEIR SUB CONTRACTORS.
3. VISIT THE JOB SITE AND FAMILIARIZE HIMSELF COMPLETELY WITH ALL EXISTING CONDITIONS RELATIVE TO THE NEW WORK CALLED FOR ON THE DRAWINGS AND SPECIFICATIONS. NO COMPENSATION FOR EXTRA WORK ON BEHALF OF THE CONTRACTOR WILL BE CONSIDERED THAT WOULD HAVE BEEN DETERMINED BY VISUAL OBSERVATION PRIOR TO BIDDING.
4. UNDERSTAND THAT THE TERM "MATCH EXISTING" AS LISTED ON THESE DRAWINGS SHALL MEAN THAT ALL WORK TO BE PERFORMED MUST BE OF SIMILAR MATERIALS, CONSTRUCTION AND FINISHED TO THE LINES OF ADJACENT WORK IN ALL RESPECTS.
5. BE RESPONSIBLE FOR ALL CUTTING, FILLING, PATCHING AND/OR REPAIRING OF EXISTING WALLS, FLOORS AND CEILINGS AS REQUIRED FOR THE INSTALLATION OF ALL NEW MECHANICAL, ELECTRICAL AND PLUMBING WORK IN THE EXISTING BUILDING. (VERIFY ALL CONDITIONS AT THE SITE).
6. PATCH AND REPAIR ALL WALLS, FLOORS, AND CEILINGS IN ALL AREAS AFFECTED BY DEMOLITION WORK. ALL WORK TO BE PERFORMED MUST BE OF SIMILAR MATERIALS, CONSTRUCTION AND FINISHED TO THE LINES OF ADJACENT WORK IN ALL RESPECTS.
7. COORDINATE ALL MECHANICAL, ELECTRICAL AND PLUMBING WORK WITH THE ARCHITECTURAL DRAWINGS PRIOR TO PROCEEDING WITH THE NEW WORK IN ALL AREAS.
8. PROVIDE DUST PARTITIONS AS REQUIRED TO KEEP AREAS OUTSIDE OF SCOPE FREE OF DIRT AND DUST. THE GENERAL CONTRACTOR WILL BE RESPONSIBLE FOR CLEANING ANY AREAS LEFT UNPROTECTED.
9. BE RESPONSIBLE TO CLEAN THE WORK AREA AT THE END OF EACH WORK DAY. ALL TRASH AND DEBRIS TO BE REMOVED FROM THE BUILDING.
10. SUBMIT M.E.P. COORDINATION DRAWINGS TO THE ARCHITECT FOR REVIEW OF LOCATIONS OF ALL SYSTEMS TO AVOID CONFLICTS AND COORDINATE LOCATIONS OF ALL DEVICES AND LIGHTING.
11. PROVIDE REQUIRED FIRE-RETARDANT WOOD BLOCKING WITHIN WALLS, FLOORS AND CEILINGS FOR PROPER INSTALLATION OF ALL WALL, FLOOR AND CEILING MOUNTED MARKER BOARDS, TELEVISIONS/MONITORS, PROJECTOR SCREENS, WALL CABINETS, RESTROOM AND KITCHEN ACCESSORIES AND CASEWORK, TRIM SUCH AS CHAIR RAILS/CROWN MOLDING/BASE/CASINGS/ETC., ELECTRONIC AND OTHER EQUIPMENT. ALSO SEE SPECIFICATIONS FOR OTHER BLOCKING REQUIREMENTS.

ARCHITECTURAL ABBREVIATION LEGEND

- = NO WORK NEEDED
ACT = ACOUSTICAL CEILING TILE
ACTT = ACOUSTICAL CEILING TILE-TEGULAR
AFF = ABOVE FINISH FLOOR
ALUM = ALUMINUM
CBB = CEMENTITIOUS BACKER BOARD
CJ = CONTROL JOINT
CLR = CLEAR
CMU = CONCRETE MASONRY UNIT(S)
CO = CLEAN OUT
CONC = CONCRETE
CONST = CONSTRUCTION
CORR = CORRIDOR
CT = CERAMIC TILE
CPT = CARPET
CPTT = CARPET TILE
DEMO = DEMOLISH/DEMOLITION
DIA = DIAMETER
DIM = DIMENSION
DN = DOWN
DWG = DRAWING
DWP = DURABLE WALL PROTECTION
ECT = ENTRANCE CARPET TILE
EJ = EXPANSION JOINT
ELEC = ELECTRIC/ELECTRICAL
EPX = EPOXY
EQ = EQUAL
ETR = EXISTING TO REMAIN
EXT = EXISTING
FD = FLOOR DRAIN
FE = FIRE EXTINGUISHER
FEC = FIRE EXTINGUISHER & CABINET
FF = FINISH FLOOR
FHC = FIRE HOSE CABINET
FIN = FINISH
FLR = FLOOR
FOC = FACE OF CONCRETE
FOS = FACE OF STUD
FR = FIRE RATED
FRP = FIBERGLASS REINFORCED PANEL
FRS = FIRE-RATED SAFETY GLASS
FT = FOOT/FEET
FTG = FOOTING
GA = GAUGE
GALV = GALVANIZED
GB = GRAB BAR
GC = GENERAL CONTRACTOR
GLU.LAM = GLUE LAMINATED
GWB = GYPSUM WALL BOARD
GHM = GALVANIZED HOLLOW METAL
HB = HOSE BIBB
HM = HOLLOW METAL
HORIZ = HORIZONTAL
HR = HOUR
HVAC = HEATING/VENTILATING/AIR CONDITIONING
ID = INSIDE DIAMETER
INSUL = INSULATED
INT = INTERIOR
JAN = JANITOR
JT = JOINT
LAM = LAMINATE
LAV = LAVATORY
LWT = LIGHTWEIGHT
MAS = MASONRY
MAT = MATERIAL
MAX = MAXIMUM
MECH = MECHANICAL
MIN = MINIMUM
MISC = MISCELLANEOUS
MFR = MANUFACTURER
MO = MASONRY OPENING
MRT = MOISTURE RESISTANT TILE
NIC = NOT IN CONTRACT
NTS = NOT TO SCALE
OC = ON CENTER
OD = OUTSIDE DIAMETER
OFF = OFFICE
OPNG = OPENING
OPP = OPPOSITE
OTS = OPEN TO STRUCTURE
PLAM = PLASTIC LAMINATE
PT = PAINT or PRESSURE TREATED
PV = PHOTOVOLTAIC PANELS
PVC = POLYVINYL CHLORIDE
QT = QUARRY TILE
R = RISER
RAD = RADIUS
RAF = RESILIENT ATHLETIC FLOORING
RO = ROUGH OPENING
SF = SQUARE FOOT/FEET
S#F = STAIN # FINISH
SDT = STATIC DISSIPATING TILE
SEAL = SEALED CONCRETE
SGB = SUSPENDED GYPSUM BOARD
SIM = SIMILAR
SIP = STRUCTURAL INSULATED PANEL
SQ = SQUARE
SS = STAINLESS STEEL
STL = STEEL
STOR = STORAGE
STRUC = STRUCTURAL
SV = SHEET VINYL
SWG = SPECIAL WALL GLAZE
T&G = TONGUE & GROOVE
TEMP = TEMPERED
TOS = TOP OF STEEL
TV = TELEVISION
TOW = TOP OF WALL
TYP = TYPICAL
UON = UNLESS OTHERWISE NOTED
VAS = VERIFY AT SITE
VB = VINYL BASE
VCT = VINYL COMPOSITION TILE
VERT = VERTICAL
VIF = VERIFY IN FIELD
VT = VINYL TILE
VWC = VINYL WALL COVERING
W = WITH
WC = WATER CLOSET
WD = WOOD
WH = WATER HEATER
W/O = WITHOUT
WP = WATERPROOF(ING)
WR = WATER RESISTANT
WWM = WELDED WIRE MESH
RD = ROOF DRAIN
REBAR = REINFORCEMENT BAR(S)
REINF = REINFORCEMENT
RH = ROBE HOOK
RM = ROOM
RMK = REMARK

ARCHITECTS
Saccoccio & Associates, Inc.
1085 Park Avenue
Cranston, Rhode Island
02910
tel 401.942.7970
fax 401.942.7975

Consultant

ROGER WILLIAMS PARK ZOO EDUCATION CENTER & PAVILION

ROGER WILLIAMS PARK ZOO
1000 ELMWOOD AVENUE,
PROVIDENCE, RI 02907

Revision Schedule	
Revision Number	Revision Date

ISSUED FOR BID
AUGUST 19, 2024

SHEET TITLE

GENERAL MOUNTING HEIGHTS, GENERAL NOTES

DRAWN BY:	KR	JOB NUMBER:	18050
CHECKED BY:	MS	DATE:	08-19-2024

G2.0

SHEET: OF:

GENERAL WALL NOTES

1. SEE "MATERIAL MODIFIERS" FOR REQUIRED MODIFICATIONS TO THE DESIGNATED WALL TYPES.

2. ALL FIRE RATED WALL ASSEMBLIES SHALL BE CONTINUOUS FROM THE FLOOR TO THE UNDERSIDE OF THE ROOF OR FLOOR DECK. INSTALL FIRE SAFING, CAULK, ETC. AS REQUIRED AT INTERSECTIONS OF FIRE-RATED WALLS AND ALL STRUCTURAL OR NON-STRUCTURAL ELEMENTS. FILL SPACES BETWEEN DECK FLUTES AND TOP OF WALLS TO ACQUIRE THE CONTINUOUS DESIGNATED FIRE RATING.

3. UNLESS NOTED OTHERWISE DIMENSIONS TO MASONRY WALLS ARE TO THE WALL FACE AND DIMENSIONS TO STEEL STUD WALLS ARE TO THE WALL CENTER.

4. WALLS THAT ARE NOT SPECIFIED TO GO FULL HEIGHT SHALL TERMINATE A MINIMUM OF 6" ABOVE THE FINISH CEILING HEIGHT WITHIN ROOM AND BE ADEQUATELY BRACED.

5. PROVIDE CEMENTITIOUS BACKER BOARD AS BACK UP BEHIND ALL AREAS WHERE CERAMIC TILE OR STONE WALL OR BASE IS SCHEDULED.

6. SUBSTUTE 5/8" MOISTURE RESISTANT GWB IN LIEU OF STANDARD 5/8" GWB AT ALL "WET" WALLS NOT SCHEDULED TO RECEIVE TILE, INCLUDING BEHIND WATER CLOSETS, URINALS, LAVATORIES, MOP/UTILITY SINKS, ABOVE/AROUND SHOWER ENCLOSURES, ETC.

7. ALL EXPOSED CORNERS OF CMU WALLS SHALL HAVE A 1" RADIUS.

8. ALL STEEL STUD WALLS THAT CONTINUE TO THE UNDERSIDE OF DECK SHALL HAVE DEFLECTION TRACKS AS REQUIRED.

9. ALL WOOD BLOCKING IS TO BE FIRE-RESISTANT.

10. ALL WOOD COMING IN CONTACT WITH CONCRETE OR MASONRY SHALL BE PRESSURE TREATED.

11. PROVIDE REQUIRED FIRE-RETARDANT WOOD BLOCKING WITHIN WALLS, FLOORS AND CEILINGS FOR PROPER INSTALLATION OF ALL WALL, FLOOR AND CEILING MOUNTED MARKER BOARDS, TELEVISIONS/MONITORS, PROJECTOR SCREENS, WALL CABINETS, RESTROOM AND KITCHEN ACCESSORIES AND CASEWORK, TRIM SUCH AS CHAIR RAILS/CROWN MOLDING/BASE/CASINGS/ETC., ELECTRONIC AND OTHER EQUIPMENT. ALSO SEE SPECIFICATIONS FOR OTHER BLOCKING REQUIREMENTS.

12. UNLESS NOTED OTHERWISE PROVIDE CONTROL JOINT TYPES AND SPACING AS SPECIFIED AND ACCORDING TO EACH MATERIAL MANUFACTURER'S RECOMMENDATIONS. LOCATE JOINTS AT DOOR FRAME JAMBS WHERE POSSIBLE.

13. ANY WALL NOT HAVING A WALL-TYPE TAG SHALL BE CONSIDERED TO BE AT A MINIMUM 3 5/8" STEEL STUDS @ 16" OC WITH 5/8" 'TYPE X' GWB ON EACH SIDE. NOTIFY THE ARCHITECT PRIOR TO CONSTRUCTING ANY UNDESIGNATED WALL.

14. ALL WALL SURFACES WITHIN ELECTRIC/DATA/MECHANICAL ROOMS HAVING PANELS/CONTROLS/ETC. INSTALLED ON THEM SHALL HAVE 5/8" FIRE-TREATED PLYWOOD INSTALLED OVER THE STUDS IN LIEU OF SHEETROCK. WHERE A WALL IS CMU THE FIRE TREATED PLYWOOD SHALL BE INSTALLED OVER 7/8" METAL FURRING @ 16" OC VERTICALLY.

MATERIAL MODIFIERS (also see general wall notes)

"a" = FILL STUD CAVITY FULL HEIGHT WITH SOUND ATTENUATION BATTING. WALL ASSEMBLIES HAVING THIS MODIFIER SHALL BE CONTINUOUS FROM THE FLOOR TO THE UNDERSIDE OF THE ROOF OR FLOOR DECK ABOVE. PROVIDE CAULKING/SEALANT AS REQUIRED FOR CONTINUOUS MEMBRANE. ELECTRICAL OUTLETS IN ACOUSTICAL WALLS SHALL NOT BE BACK-TO-BACK.

"b" = OMIT GWB ON ONE SIDE.

"c" = PROVIDE CEMENTITIOUS BACKER BOARD AS BACK UP BEHIND ALL AREAS WHERE CERAMIC TILE AND/OR STONE WALL BASE IS SCHEDULED.

"d" = SUBSTITUTE 5/8" MOISTURE RESISTANT GWB IN LIEU OF STANDARD GWB TO MOISTURE PRONE SIDE OF WALLS. ALSO, SEE GENERAL NOTE #4.

"e" = SUBSTITUTE 5/8" ABUSE RESISTANT GWB (ALSO TO BE FIRE RATED WHERE DESIGNATED AS SUCH) IN LIEU OF STANDARD 5/8" GWB ON BOTH SIDES UNLESS NOTED OTHERWISE.

"f" = ADD 7/8" METAL FURRING VERTICALLY @ 16" OC AND 5/8" GWB TO DESIGNATED SIDE OF WALL. PROVIDE 5/8" FIRE-TREATED PLYWOOD IN LIEU OF THE GWB WITHIN ELECTRIC/DATA/MECH ROOMS WHERE PANELS/CONTROLS/ETC. WILL BE INSTALLED. SEE PLANS FOR DESIGNATION.

"g" = PARTITION TO BE A SMOKE ENCLOSURE AND SHALL BE COMPLETELY SEALED WITH AN APPROVED SEALANT AT ENTIRE PERIMETER INCLUDING THE INTERSECTIONS OF ALL WALLS, FLOOR/ROOF DECKS, ETC.

FIRE RATING MODIFIERS (also see general wall notes)

"1" = WALL TO HAVE A MINIMUM OF ONE HOUR FIRE RATING.
UL DESIGN #U425 WHERE STEEL STUDS ARE USED.
UL DESIGN #U415 SYSTEM "A" WHERE 2 1/2" C-H SHAPED STEEL STUDS ARE USED.
UL DESIGN #U905 WHERE 8" NOMINAL CMU IS USED.
UL DESIGN #U906 WHERE 6" NOMINAL CMU IS USED.

"2" = WALL TO HAVE A MINIMUM OF TWO HOUR FIRE RATING.
UL DESIGN #U425 WHERE STEEL STUDS ARE USED.
UL DESIGN #U905 WHERE 8" NOMINAL CMU IS USED.
UL DESIGN #U906 WHERE 6" NOMINAL CMU IS USED.

WALL TAG LEGEND



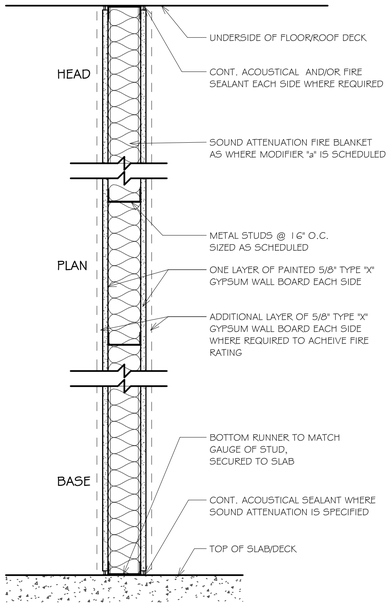

S2 2 1/2" STEEL STUDS @ 16"oc. 1 LAYER PAINTED 5/8" TYPE "X" GWB EACH SIDE. TOTAL WALL THICKNESS = 3 3/4".

S3 3 5/8" STEEL STUDS @ 16"oc. 1 LAYER PAINTED 5/8" TYPE "X" GWB EACH SIDE. TOTAL WALL THICKNESS = 4 7/8".

S4 4" STEEL STUDS @ 16"oc. 1 LAYER PAINTED 5/8" TYPE "X" GWB EACH SIDE. TOTAL WALL THICKNESS = 5 1/4".

S6 6" STEEL STUDS @ 16"oc. 1 LAYER PAINTED 5/8" TYPE "X" GWB EACH SIDE. TOTAL WALL THICKNESS = 7 1/4".

S8 8" STEEL STUDS @ 16"oc. 1 LAYER PAINTED 5/8" TYPE "X" GWB EACH SIDE. TOTAL WALL THICKNESS = 9 1/4".

S10 10" STEEL STUDS @ 16"oc. 1 LAYER PAINTED 5/8" TYPE "X" GWB EACH SIDE. TOTAL WALL THICKNESS = 11 1/4".

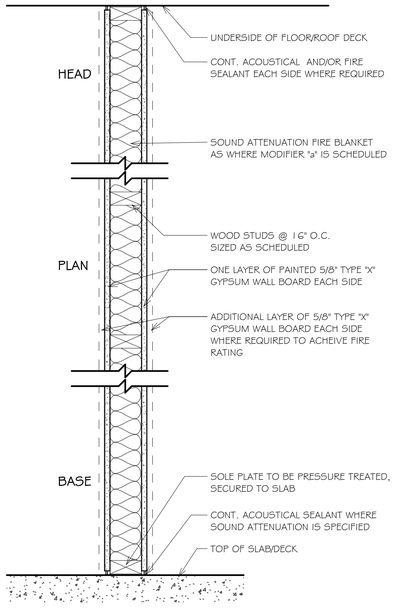

W3 2x3 NOMINAL WOOD STUDS @ 16"oc. 1 LAYER 5/8" GWB TYPE "X" EACH SIDE. TOTAL WALL THICKNESS = 3 3/4".

W4 2x4 NOMINAL WOOD STUDS @ 16"oc. 1 LAYER 5/8" GWB TYPE "X" EACH SIDE. TOTAL WALL THICKNESS = 4 3/4".

W6 2x6 NOMINAL WOOD STUDS @ 16"oc. 1 LAYER 5/8" GWB TYPE "X" EACH SIDE. TOTAL WALL THICKNESS = 6 3/4".

W8 2x8 NOMINAL WOOD STUDS @ 16"oc. 1 LAYER 5/8" GWB TYPE "X" EACH SIDE. TOTAL WALL THICKNESS = 8 1/2".

W10 2x10 NOMINAL WOOD STUDS @ 16"oc. 1 LAYER 5/8" GWB TYPE "X" EACH SIDE. TOTAL WALL THICKNESS = 10 1/2".

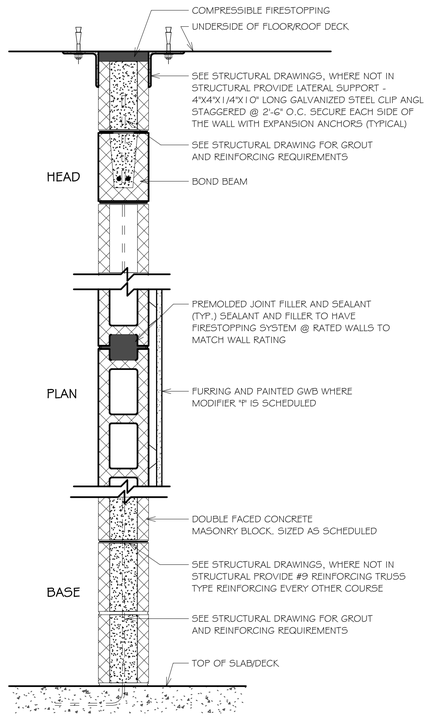

M4 4" NOMINAL CMU. SEE STRUCTURAL DWGS FOR REINFORCEMENT REQUIREMENTS.

M6 6" NOMINAL CMU. SEE STRUCTURAL DWGS FOR REINFORCEMENT REQUIREMENTS.

M8 8" NOMINAL CMU. SEE STRUCTURAL DWGS FOR REINFORCEMENT REQUIREMENTS.

M10 10" NOMINAL CMU. SEE STRUCTURAL DWGS FOR REINFORCEMENT REQUIREMENTS.

M12 12" NOMINAL CMU. SEE STRUCTURAL DWGS FOR REINFORCEMENT REQUIREMENTS.

1 G2.1 WALL TYPES

1 1/2" = 1'-0"

GENERAL NOTE:
- FLOOR ASSEMBLY IS TO MEET ALL UL DESIGN COMPONENTS & REQUIREMENTS

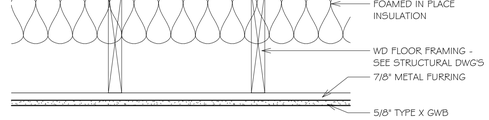

TYPE A - UL L508

3 G2.1 1 HOUR RATED FLOOR ASSEMBLIES

1 1/2" = 1'-0"

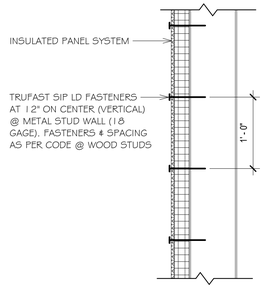

AT STUD WALL

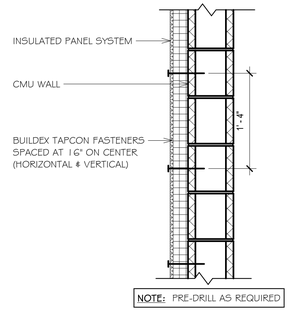

AT MASONRY WALL

2 G2.1 INSULATED SHEATHING FASTENING DETAILS

1" = 1'-0"

SZ ARCHITECTS

Saccoccio & Associates, Inc.
1085 Park Avenue
Cranston, Rhode Island
02910
tel 401.942.7970
fax 401.942.7975

Consultant

ROGER WILLIAMS PARK ZOO EDUCATION CENTER & PAVILION

ROGER WILLIAMS PARK ZOO
1000 ELMWOOD AVENUE, PROVIDENCE, RI 02907

Revision Schedule	
Revision Number	Revision Date

ISSUED FOR BID
AUGUST 19, 2024

SHEET TITLE
WALL TYPES

DRAWN BY:	KR	JOB NUMBER:	18050
CHECKED BY:	MS	DATE:	08-19-2024

G2.1

SHEET: OF:

GENERAL CONSTRUCTION NOTES:

1. AN APPROVED SET OF PLANS AND ALL APPLICABLE PERMITS MUST BE AVAILABLE AT THE CONSTRUCTION SITE TRAILER AT ALL TIMES. DEVIATIONS OR CHANGES WILL NOT BE ALLOWED UNLESS BY WRITTEN APPROVAL FROM THE ENGINEER.

2. SITEWORK CONSTRUCTION SHALL NOT COMMENCE UNTIL ALL APPROVALS HAVE BEEN SECURED. REQUIRED PERMITS/APPROVALS FOR THE PROJECT INCLUDE BUT NOT LIMITED TO THE FOLLOWING: SITE PLAN APPROVAL BY THE CITY OF PROVIDENCE/ROGER WILLIAMS PARK ZOO, NBC (NARRAGANTSETT BAY COMMISSION) SEWER CONNECTION, PROVIDENCE WATER SERVICE CONNECTION, RIDEM RIPDES/STORMWATER APPROVAL.

3. THE CONTRACTOR MUST RETAIN THE SERVICES OF A REGISTERED LAND SURVEYOR IN THE STATE OF RHODE ISLAND TO LAYOUT ON THE GROUND ALL NEW ELEMENTS OF WORK. IF ANY WORK IS INSTALLED PRIOR TO THE ABOVE REQUIREMENT AND IF ANY WORK IS NOT SATISFACTORY TO THE ENGINEER, THE CONTRACTOR MUST REPLACE THE WORK AT NO ADDITIONAL COST TO THE OWNER.

4. THE CONTRACTOR SHALL VERIFY THE PROPOSED LAYOUT WITH ITS RELATIONSHIP TO THE EXISTING SITE SURVEY. THE CONTRACTOR SHALL VERIFY ALL DIMENSIONS, SITE CONDITIONS AND MATERIAL SPECIFICATIONS AND SHALL NOTIFY THE OWNER AND ENGINEER OF ANY ERRORS, OMISSIONS OR DISCREPANCIES BEFORE COMMENCING, INSTALLING OR PROCEEDING WITH WORK.

5. IT IS THE RESPONSIBILITY OF THE CONTRACTOR TO DETERMINE THE LOCATION OF ALL EXISTING UNDERGROUND UTILITIES AND TO TAKE WHATEVER NECESSARY MEASURES NEEDED TO PROVIDE FOR THEIR PROTECTION. THE ENGINEER HAS DILIGENTLY ATTEMPTED TO LOCATE AND INDICATE ALL EXISTING UNDERGROUND UTILITIES AND FACILITIES ON THE DRAWINGS; HOWEVER, THE INFORMATION SHOWN IS FOR THE CONTRACTORS CONVENIENCE ONLY. THE ENGINEER ASSUMES NO RESPONSIBILITY FOR THE LOCATIONS OF UTILITIES SHOWN OR NOT SHOWN. THE CONTRACTOR SHALL MAKE EXPLORATORY EXCAVATIONS AND LOCATE ANY EXISTING UTILITIES SUFFICIENTLY AHEAD OF CONSTRUCTION, VERIFY ALL DIMENSIONS, SITE CONDITIONS AND MATERIALS. THE CONTRACTOR MUST CONTACT THE LOCAL UTILITY COMPANIES FOR EXACT LOCATION OF UTILITIES PRIOR TO THE START OF ANY CONSTRUCTION AND SHALL NOTIFY THE ENGINEER OF ANY DISCREPANCIES BEFORE START OF ANY WORK. IT IS THE SOLE RESPONSIBILITY OF THE CONTRACTOR TO REPAIR AND REPLACE ANY AND ALL DAMAGE MADE TO UTILITIES BY THE CONTRACTOR.

6. THE CONTRACTOR MUST NOTIFY OPERATORS WHO MAINTAIN UNDERGROUND UTILITIES IN THE AREA OF PROPOSED CONSTRUCTION, EXCAVATION OR BLASTING AT LEAST THREE WORKING DAYS, BUT NOT MORE THAN TEN WORKING DAYS PRIOR TO THE START OF ANY CONSTRUCTION, EXCAVATION OR BLASTING. ALL WATER, SEWER, GAS AND ALL OTHER UTILITIES MUST BE MAINTAINED AT ALL TIMES DURING CONSTRUCTION.

7. METHODS AND MATERIALS USED IN THE CONSTRUCTION OF IMPROVEMENTS SHALL CONFORM TO THE CURRENT CONSTRUCTION STANDARDS AND SPECIFICATIONS FOR THE CITY OF PROVIDENCE AND THE STATE OF RHODE ISLAND DEPARTMENT OF TRANSPORTATION.

   7.1. ALL CONSTRUCTION IN THE PUBLIC ROW MUST BE IN ACCORDANCE WITH THE CITY'S STANDARD DETAILS AVAILABLE AT HTTPS://WWW.PROVIDENCERI.GOV/PUBLIC-WORKS/FORMS/UNDER "REPORTS + PUBLICATIONS", OR AT HTTPS://WWW.PROVIDENCERI.GOV/WP-CONTENT/UPLOADS/2019/06/PROVIDENCE-DPW-STANDARD-DETAILS.PDF.

   7.2. THE STATE OF RHODE ISLAND STANDARD SPECIFICATIONS FOR ROAD AND BRIDGE CONSTRUCTION, 2004 EDITION, AS AMENDED, AND THE RHODE ISLAND STANDARD DETAILS ARE MADE A PART HEREOF, AS IF ATTACHED HERETO.

8. THE CONTRACTOR IS RESPONSIBLE FOR REPLACING ANY PAVEMENT, DRIVEWAYS, SIDEWALKS, WALL, CURBS, ETC. DAMAGED DURING CONSTRUCTION WITH MATCHING MATERIALS.

9. THE CONTRACTOR AGREES THAT HE WILL ASSUME SOLE AND COMPLETE RESPONSIBILITY FOR THE PROJECT SITE CONDITIONS THROUGHOUT CONSTRUCTION. INCLUDING SAFETY OF ALL PERSONS AND PROPERTY. THIS REQUIREMENT WILL APPLY CONTINUOUSLY AND NOT BE LIMITED TO NORMAL WORKING HOURS AND THAT THE CONTRACTOR SHALL DEFEND, INDEMNIFY AND HOLD THE OWNER AND THE ENGINEER HARMLESS FROM ANY AND ALL LIABILITY, REAL OR ALLEGED IN CONJUNCTION WITH THE PERFORMANCE OF WORK ON THIS PROJECT.

10. ALL MATERIALS USED FOR CONSTRUCTION MUST BE NEW AND FREE OF DEFECTS. USED OR SALVAGED MATERIAL WILL NOT BE ALLOWED UNLESS WRITTEN APPROVAL FROM THE OWNER IS OBTAINED BY THE CONTRACTOR.

11. AT ALL TIME THE CONTRACTOR MUST MAINTAIN ACCESS FOR EMERGENCY VEHICLES AROUND AND TO ALL BUILDINGS. (I.E. IN TIMES OF RAIN OR SNOW, ROADS MUST ABLE TO CARRY A FIRE TRUCK BY BEING PAVED OR HAVING A CRUSHED STONE BASE, ETC.). WIDTH OF EMERGENCY VEHICLE ACCESS MUST BE A MINIMUM OF 20 FEET WIDE. ACCESS TO BUILDINGS THAT HAVE A FIRE SPRINKLER SYSTEM OR STANDPIPE MUST BE WITHIN 40 FEET OF THE FIRE DEPARTMENT CONNECTION (FDC). NFPA 1141 3-1.

12. NECESSARY BARRICADES, LIGHTS, SIGNS AND OTHER TRAFFIC CONTROL METHODS AS MAYBE NECESSARY FOR THE PROTECTION AND SAFETY OF THE PUBLIC MUST BE PROVIDED AND MAINTAINED THROUGHOUT CONSTRUCTION BY THE CONTRACTOR.

13. HIGH INTENSITY LIGHTING FACILITIES MUST BE SO ARRANGED THAT THE SOURCE OF ANY LIGHT IS CONCEALED FROM PUBLIC VIEW AND FROM ADJACENT RESIDENTIAL PROPERTY AND DOES NOT INTERFERE WITH TRAFFIC. (REFER TO ELECTRICAL SITE PLANS PREPARED BY OTHERS FOR DETAILS.)

14. ALL RI HIGHWAY BOUNDS AND PERMANENT SURVEY MARKERS SHALL BE PROTECTED THROUGHOUT CONSTRUCTION.

15. ALL WORK WITHIN THE STATE HIGHWAY RIGHT OF WAY SHALL CONFORM TO RIDOT STANDARD SPECIFICATIONS FOR ROAD AND BRIDGE CONSTRUCTION, 2004 EDITION, INCLUDING ALL REVISIONS AND THE RI STANDARD DETAILS.

16. ALL TRAFFIC CONTROL SHALL CONFORM TO THE MANUAL ON UNIFORM TRAFFIC CONTROL DEVICES 2003 INCLUDING ALL REVISIONS.

17. REFER TO ARCHITECTURAL, STRUCTURAL, AND MECHANICAL PLANS FOR ALL BUILDING INFORMATION.

18. THERE ARE KNOWN WETLAND AREAS ON OR ADJACENT TO THE PROJECT SITE. THE WETLANDS INDICATED HAVE BEEN FLAGGED IN THE FIELD.

19. ALL CURB RADII ARE 3' UNLESS OTHERWISE NOTED ON THE SITE PLAN.

20. PRIOR TO THE START OF CONSTRUCTION THE CONTRACTOR IS REQUIRED TO DEVELOP AND IMPLEMENT A PLAN FOR THE TEMPORARY CONTROL OF VEHICULAR AND PEDESTRIAN TRAFFIC FOR WORK WITHIN PUBLIC STREET RIGHT-OF-WAY AT THE SITE EGRESS. CONTRACTOR SHALL OBTAIN APPROVAL OF SAID PLAN FROM APPROPRIATE STATE AND COMMUNITY PUBLIC SAFETY OFFICIALS.

21. PRECAST STRUCTURES MAY BE USED AT CONTRACTOR'S OPTION. SHOP DRAWINGS OF PRECAST STRUCTURES SHALL BE REVIEWED BY THE ENGINEER AND APPROVED BEFORE USE.

22. IF ANY EXISTING STRUCTURES AND/OR UTILITIES TO REMAIN ARE DAMAGED DURING CONSTRUCTION, EITHER ON THE PROJECT SITE, ADJACENT PROPERTIES, OR WITHIN STATE RIGHT-OF-WAY, IT SHALL BE THE CONTRACTORS RESPONSIBILITY TO REPAIR AND/OR REPLACE THE EXISTING STRUCTURE AS NECESSARY TO RETURN IT TO EXISTING CONDITIONS OR BETTER.

SURVEY NOTES:

1. THE EXISTING CONDITIONS SHOWN WERE PROVIDED BY THE ROGER WILLIAMS PARK ZOO FOR USE IN THE PROJECT DESIGN AND ARE BASED ON DRAWINGS PREPARED BY BERKSHIRE DESIGN GROUP, ET. AL. THE EXISTING MAPPING HAS BEEN SUPPLEMENTED BY LIMITED FIELD 'EDITS BY GAROFALO & ASSOCIATES, BASED ON OBSERVED CONDITIONS IN JULY 2019 AND RECORD PLANS FOR PAST CONSTRUCTION WITHIN AND ADJACENT TO THE WORK ZONE. FIELD SURVEY WAS PREFORMED BY GAROFALO & ASSOCIATES WITHIN THE ZEBRA EXHIBIT IN OCTOBER, 2019 TO SUPPLEMENT THE BASE MAPPING PROVIDED.

2. THIS SURVEY HAS BEEN CONDUCTED AND THE PLAN HAS BEEN PREPARED PURSUANT TO SECTION 4.35-RICR-00-00-1.9 OF THE RULES AND REGULATIONS ADOPTED BY THE RHODE ISLAND BOARD OF REGISTRATION FOR PROFESSIONAL LAND SURVEYORS ON NOVEMBER 25, 2015, AS FOLLOWS

DATA ACCUMULATION SURVEY	CLASS III
TOPOGRAPHIC SURVEY ACCURACY	T-2

3. SITEWORK HAS BEEN PERFORMED ON AND IN THE IMMEDIATE VICITITY OF THE PROJECT SITE SINCE PROJECT SURVEY IN ASSOCIATION WITH OTHER PROJECTS BY THE OWNER. SPECIFIC REFERENCE IS MADE TO PLANS TITLED "ADVANCE UTILITY SITE PLANS FOR ROGER WILLIAMS PARK ZOO EDUCATION CENTER & PAVILION", DATED DECEMBER 16, 2023.

GENERAL UTILITY NOTES:

1. THE CONTRACTOR SHALL NOTIFY DIG-SAFE (1-888-344-7233) AND ALL LOCAL AUTHORITIES & UTILITY COMPANIES TO VERIFY LOCATIONS OF UTILITIES WITHIN THE AREA 72 HOURS PRIOR TO BEGINNING ANY EXCAVATION OR DEMOLITION FOR THE PURPOSE OF COORDINATING THE MARKING OF UNDERGROUND UTILITIES. LOCATION AND DEPTHS OF EXISTING UTILITIES SHOWN ARE APPROXIMATE ONLY. THE CONTRACTOR SHALL BE RESPONSIBLE TO VERIFY, LOCATE AND PROTECT EXISTING UTILITIES IN THE FIELD WHETHER OR NOT SHOWN ON THE DRAWINGS.

2. ALL WORK SHALL BE IN COMPLETE ACCORDANCE WITH ALL APPLICABLE STATE, FEDERAL AND LOCAL CODES, AND ALL NECESSARY LICENSES AND PERMITS SHALL BE OBTAINED BY THE CONTRACTOR AT HIS EXPENSE UNLESS PREVIOUSLY OBTAINED BY THE OWNER/DEVELOPER.

3. THE CONTRACTOR SHALL COORDINATE LOCATION AND INSTALLATION OF ALL UNDERGROUND UTILITIES AND APPURTENANCES TO MINIMIZE DISTURBANCE OF CURBING, PAVING AND COMPACTED SUBGRADE, THE CONTRACTOR SHALL NOTIFY THE TOWN ENGINEER & ALL LOCAL UTILITY COMPANIES 48 HOURS BEFORE EACH PHASE OF CONSTRUCTION. THE CONTRACTOR SHALL IMMEDIATELY INFORM THE ENGINEER OF ANY DISCREPANCIES OR ERRORS DISCOVERED IN THE PLANS.

4. BEDDING REQUIREMENTS SPECIFIED HEREIN ARE TO BE CONSIDERED AS MINIMUMS FOR RELATIVELY DRY, STABLE EARTH CONDITIONS. ADDITIONAL BEDDING SHALL BE REQUIRED FOR ROCK TRENCHES AND WET AREA. CONTRACTOR SHALL HAVE THE RESPONSIBILITY TO PROVIDE SUCH ADDITIONAL BEDDING AS MAY BE REQUIRED TO PROPERLY CONSTRUCT THE WORK.

5. THE CONTRACTOR SHALL REMOVE ANY ABANDONED FOUNDATIONS, UTILITY STRUCTURES, BURIED DEBRIS ETC. WHICH INTERFERE WITH THE INSTALLATION OF THE UTILITY WORK. ALL SUCH STRUCTURES SHALL BE COMPLETELY REMOVED AND THE EXCAVATED AREA SHALL BE BACKFILLED WITH COMPACTED GRAVEL IN 6" LIFTS TO 95% COMPACTION TO 6" BELOW THE BOTTOM OF THE UTILITY AND PIPE.

6. COMPACTION OF THE BACKFILL OF ALL TRENCHES SHALL BE COMPACTED TO THE DENSITY OF 95% OF THE THEORETICAL MAXIMUM DRY DENSITY (ASTM D698). BACKFILL MATERIAL SHALL BE FREE FROM ROOTS, STUMPS OR OTHER FOREIGN DEBRIS AND SHALL BE PLACED IN LIFTS NOT TO EXCEED ONE FOOT IN COMPACTED FILL THICKNESS. CORRECTION OF ANY TRENCH SETTLEMENT WITHIN A YEAR FROM THE DATE OF PROJECT APPROVAL WILL BE THE RESPONSIBILITY OF THE CONTRACTOR.

7. ALL PIPING LAYOUT INDICATED ON THESE PLANS IS DIAGRAMMATIC ONLY AND DOES NOT SHOW ALL THE REQUIRED FITTINGS FOR PROPER ALIGNMENT. THE CONTRACTOR SHALL PROVIDE ALL REQUIRED FITTINGS TO OBTAIN PROPER ALIGNMENT AND FOR EXISTING UTILITY CONNECTIONS BASED UPON FIELD CONDITIONS.

8. IF DURING EXCAVATION THE TRENCH WIDTH EXCEEDS THE SUM OF THE PIPE O.D. PLUS 2'-0", PLACE AND COMPACT THE FILL TO 12" ABOVE THE PIPE AND RE-EXCAVATE TO REQUIRED GRADE.

9. ALL WATER SERVICE MATERIALS AND WORKMANSHIP SHALL CONFORM TO PROVIDENCE WATER SUPPLY BOARD REGULATIONS, STANDARDS AND SPECIFICATIONS. NOTIFICATION SHALL BE PROVIDED TO SAID AUTHORITIES AT LEAST 72 HOURS PRIOR TO INITIATING CONSTRUCTION. DOMESTIC WATER SERVICE PIPING SIZE SHOWN IS APPROXIMATE ONLY AND SHALL BE SIZED AND VERIFIED BY A LICENSED PLUMBING ENGINEER.

10. ALL FIRE AND PLUMBING FIXTURES MUST CONFORM TO LOCAL SPECIFICATIONS AND AS STIPULATED BY THE LOCAL FIRE MARSHALL AND/OR THE BUILDING OFFICIAL.

11. SEWER LINES SHALL BE INSTALLED AT A MINIMUM 10 FOOT HORIZONTAL SEPARATION FROM ANY PROPOSED OR EXISTING WATER LINE. WHENEVER SEWER LINES MUST CROSS WATER LINES, THE SEWER SHALL BE INSTALLED SO THAT THE TOP OF THE SEWER IS AT LEAST 18 INCHES BELOW THE BOTTOM OF THE WATER MAIN. WHERE 18 INCH VERTICAL SEPARATION & 10 FOOT HORIZONTAL SEPARATION CAN NOT BE MET AT WATER AND SEWER CROSSINGS, THE SEWER PIPE SHALL BE ENCASED IN EITHER DUCTILE IRON OR c900 BLUE BRUTE PIPE FOR A DISTANCE OF 10 FEET ON EACH SIDE OF CROSSING.

12. STORM DRAINS 12" AND OVER SHALL BE SMOOTH INTERIOR WALL AND EXTERIOR CORRUGATED HIGH DENSITY POLYETHYLENE (HDPE) PIPE CAPABLE OF WITHSTANDING (H-20) LOAD UNLESS NOTED OTHERWISE. PIPE SHALL BE JOINED USING BELL & SPIGOT JOINTS MEETING OR EXCEED ASTM F2648. THE JOINT SHALL BE SOIL-TIGHT AND GASKETS SHALL MEET OR EXCEED ASTM F477. HDPE PIPE SHALL BE AS MANUFACTURED BY ADVANCED DRAINAGE SYSTEMS INC. (ADS), HANCOR PIPE OR LANE PIPE. ALL STORM DRAINAGE PIPING SHALL BE LAID ON A SMOOTH CONTINUOUS GRADE WITH NO VISIBLE BENDS AT THE JOINTS. WHERE INDICATED ON DRAWINGS REINFORCED CONCRETE PIPE (RCP) PIPE SHALL BE CLASS III RCP WITH "O" RING GASKET JOINTS

13. GAS SERVICE FACILITIES SHALL BE DESIGNED BY OTHERS. CONTRACTOR SHALL BE RESPONSIBLE TO COORDINATE UTILITY INSTALLATIONS AS REQUIRED TO ENSURE ADEQUATE GAS SERVICE IS PROVIDED AND SHALL BE RESPONSIBLE FOR ALL INSTALLATION PROCEDURES (TRENCHING, LAYING PIPE, ETC.) AS ARE REQUIRED BY THE GAS COMPANY FOR COMPLETE AND IN PLACE CONSTRUCTION.

14. ELECTRIC SERVICE FACILITIES SHALL BE DESIGNED BY OTHERS. ELECTRIC SERVICE AND TRANSFORMER PAD SHALL CONFORM TO THE REQUIREMENTS OF THE ELECTRIC COMPANY. CONTRACTOR SHALL BE RESPONSIBLE FOR ENSURING ADEQUATE ELECTRIC SERVICE IS PROVIDED AND SHALL BE RESPONSIBLE FOR ALL INSTALLATION PROCEDURES (TRENCHING, LAYING PIPE, ETC.) AS ARE REQUIRED BY THE ELECTRIC COMPANY FOR COMPLETE AND IN PLACE CONSTRUCTION. REFER TO ELECTRICAL DRAWINGS FOR DETAILS ON ALL UNDERGROUND ELECTRIC.

15. TEL/CABLE SERVICE FACILITIES SHALL BE DESIGNED BY OTHERS CONTRACTOR SHALL BE RESPONSIBLE FOR ENSURING ADEQUATE UTILITY SERVICE IS PROVIDED AND SHALL BE RESPONSIBLE FOR ALL INSTALLATION PROCEDURES (TRENCHING, LAYING PIPE ETC.) AS IS REQUIRED BY THE LOCAL UTILITY CO. FOR COMPLETE AND IN PLACE CONSTRUCTION. REFER TO ELECTRICAL DRAWINGS FOR ALL UNDERGROUND ELECTRIC.

16. SITE LIGHTING ELEMENTS ARE SHOWN FOR APPROXIMATE ONLY. SITE CONTRACTOR SHALL BE RESPONSIBLE TO COORDINATE INSTALLATION WORKING OF LIGHT IN LOCATIONS INDICATED. REFER TO SITE LIGHTING PLANS PLANS FOR INSTALLATION REQUIREMENTS.

GENERAL DRAINAGE & GRADING NOTES:

1. ALL STORM PIPE ENTERING STRUCTURES SHALL BE GROUTED TO ASSURE CONNECTION AT STRUCTURE IS WATERTIGHT.

2. ALL STORM SEWER MANHOLES IN PAVED AREAS SHALL BE FLUSH WITH PAVEMENT, AND SHALL HAVE TRAFFIC BEARING RING & COVERS. MANHOLES IN UNPAVED AREAS SHALL BE 6" ABOVE FINISH GRADE. LIDS SHALL BE LABELED "STORM SEWER".

3. CONTRACTOR SHALL ADJUST AND/OR CUT EXISTING PAVEMENT AS NECESSARY TO ASSURE A SMOOTH FIT AND CONTINUOUS GRADE.

4. CONTRACTOR SHALL ASSURE POSITIVE DRAINAGE AWAY FROM BUILDINGS FOR ALL NATURAL AND PAVED AREAS.

5. ALL UNSURFACED AREAS DISTURBED BY GRADING OPERATION SHALL RECEIVE 4 INCHES OF TOPSOIL. CONTRACTOR SHALL APPLY STABILIZATION FABRIC TO ALL SLOPES 3H:1V OR STEEPER. CONTRACTOR SHALL GRASS DISTURBED AREAS IN ACCORDANCE WITH THE CITY OF PROVIDENCE SPECIFICATIONS UNTIL A HEALTHY STAND OF GRASS IS OBTAINED.

6. THE MAXIMUM RUNNING SLOPE ALONG ANY SIDEWALK SHALL BE 5%. THE MAXIMUM CROSS SLOPE ACROSS ANY SIDEWALK SHALL BE 2%. A MINIMUM 5'x5' LANDING SHALL BE PROVIDED IN FRONT OF ALL BUILDING ENTRANCES.

7. ALL ADAAG PARKING SPACES AND LOADING SPACES SHALL BE 2% MAXIMUM SLOPE IN ANY DIRECTION.

8. INSTALL SILT SACKS AT ALL INLETS AFTER INSTALLATION.

STORMWATER SYSTEM MAINTENANCE NOTES:

THE DRAINAGE SYSTEMS ARE TO BE MONITORED THROUGHOUT THE ENTIRE CONSTRUCTION PERIOD BY THE CONTRACTOR. UPON COMPLETION OF THE PROJECT THE CONTRACTOR MUST DO A FINAL FULL MAINTENANCE & CLEAN UP OF THE STORMWATER MANAGEMENT SYSTEM AND THE SITE. UPON COMPLETION OF THE CONTRACTOR'S FINAL MAINTENANCE & CLEAN UP OF THE PROJECT, MONITORING OF THE STORMWATER MANAGEMENT SYSTEM SHALL BE THE RESPONSIBILITY OF THE OWNER.

CONSTRUCTION MONITORING/MAINTENANCE PROCEDURES SHALL BE AS FOLLOWS:
(RESPONSIBILITY OF CONTRACTOR)

1. SILT BARRIER:
   MONITOR SILT BARRIER ON A WEEKLY BASIS AND AFTER EVERY RAIN STORM EVENT AND REPAIR OR REPLACE ANY DAMAGED AREAS IMMEDIATELY. IMMEDIATELY CLEAN THE SILT BARRIER IF SIX INCHES OR MORE OF SEDIMENT HAS ACCUMULATED ON THE HAYBALE & SILT BARRIER.

2. PAVED AREAS:
   PARKING LOTS, PUBLIC & PRIVATE ROADWAYS AND GUTTERS SHALL BE SWEPT CLEAN OF ALL SEDIMENT & DEBRIS. SWEEPING & REMOVAL OF DEBRIS SHALL BE PERFORMED ON A WEEKLY BASIS AT A MINIMUM.

3. CATCH BASINS:
   ALL CATCH BASINS SHALL BE INSTALLED AS DETAILED AND INSPECTED AFTER EVERY RAIN STORM EVENT. IMMEDIATELY CLEAN THE CATCH BASIN SUMP IF TWO FEET OR MORE OF SEDIMENT HAS ACCUMULATED WITHIN THE CATCH BASIN.

4. DRAIN MANHOLES:
   DRAIN MANHOLES SHALL BE INSTALLED AS DETAILED AND INSPECTED AFTER EVERY RAIN STORM EVENT. IMMEDIATELY CLEAN THE DRAIN MANHOLE IF ONE FOOT OR MORE OF SEDIMENT HAS ACCUMULATED WITHIN THE DRAIN MANHOLE.

5. SUBSURFACE INFILTRATION BASIN (STORMTECH INFILTRATION SYSTEMS AND ISOLATOR ROWS):
   SUBSURFACE INFILTRATION BASIN SHALL BE INSPECTED AFTER EVERY RAIN STORM. CARE SHALL BE TAKEN TO PREVENT SILTATION OF THE BASIN AFTER INSTALLATION. PRETREATMENT BMP'S (DEEP SUMP CATCH BASINS & WATER QUALITY STRUCTURES) MUST BE MAINTAINED AND CLEANED PER THE PROCEDURES LISTED TO ENSURE PROPER FUNCTIONING. SUBSURFACE INFILTRATION BASIN SHALL BE MONITORED FOR ANY PONDING AND ACCUMULATION OF SEDIMENT/DEBRIS. ALL ACCUMULATED SEDIMENT AND DEBRIS MUST BE REMOVED BY A VAC-TRUCK. DISPOSAL OF ALL SEDIMENT AND DEBRIS MUST IN ACCORDANCE WITH ALL APPLICABLE LOCAL, STATE AND FEDERAL GUIDELINES & REGULATIONS.

POST CONSTRUCTION MONITORING/MAINTENANCE PROCEDURES SHALL BE AS FOLLOWS:
(RESPONSIBILITY OF OWNER)

1. PAVED AREAS:
   PARKING LOTS, ROADS AND ALL ACCESS WAYS AND GUTTERS MUST BE SWEPT CLEAN OF ALL SEDIMENT AND DEBRIS ON BI-ANNUAL BASIS IN SPRING AND FALL OF EACH YEAR. OR AS NECESSARY.

2. CATCH BASINS:
   ALL CATCH BASINS MUST BE INSPECTED AND MAINTAINED ON A BI-ANNUAL BASIS IN MARCH AND OCTOBER OF EACH YEAR. CATCH BASINS MUST BE INSPECTED TO ENSURE THEY HAVE ADEQUATE SUMP CAPACITY, FRAMES AND GRATES ARE NOT DAMAGED, OIL/WATER SEPARATING DEVICES ARE IN PLACE. CATCH BASIN SUMPS ARE TO BE CLEANED OUT DURING BI-ANNUAL INSPECTIONS IN MARCH AND OCTOBER OF EACH YEAR. IMMEDIATELY CLEAN THE CATCH BASIN SUMP IF TWO FEET OR MORE OF SEDIMENT HAS ACCUMULATED WITHIN THE CATCH BASIN.

3. DRAIN MANHOLES:
   ALL DRAIN MANHOLES MUST BE INSPECTED AND MAINTAINED ON A BI-ANNUAL BASIS IN MARCH AND OCTOBER OF EACH YEAR. DRAIN MANHOLES MUST BE INSPECTED TO ENSURE FRAMES AND COVERS ARE NOT DAMAGED AND NO BLOCKAGES HAVE OCCURRED WITHIN THE MANHOLE. DRAIN MANHOLES ARE TO BE CLEANED OUT DURING BI-ANNUAL INSPECTIONS IN MARCH AND OCTOBER OF EACH YEAR IMMEDIATELY CLEAN THE DRAIN MANHOLE IF ONE FOOT OR MORE OF SEDIMENT HAS ACCUMULATED.

4. SUBSURFACE INFILTRATION BASINS AND ISOLATOR ROWS:
   SUBSURFACE INFILTRATION BASIN SHALL BE INSPECTED ON A BIANNUAL BASIS, IN MARCH BASIN SHALL BE MONITORED FOR ANY PONDING AND ACCUMULATION OF SEDIMENT/DEBRIS. ALL ACCUMULATED SEDIMENT AND DEBRIS MUST BE REMOVED BY A VAC-TRUCK. DISPOSAL OF ALL SEDIMENT AND DEBRIS MUST IN ACCORDANCE WITH ALL APPLICABLE LOCAL, STATE AND FEDERAL GUIDELINES & REGULATIONS.

INFILTRATION AREA CONSTRUCTION PROTECTION

FOR THE LONG-TERM FUNCTION OF THE INFILTRATING SYSTEMS, CARE MUST BE TAKEN IN THIS AREA DURING CONSTRUCTION. THE CONTRACTOR SHALL EMPLOY THE FOLLOWING MINIMUM BEST MANAGEMENT PRACTICES (BMP'S):

1. THE INFILTRATION AREAS SHALL NOT BE USED AS A CONSTRUCTION SEDIMENTATION SYSTEM.

2. CONSTRUCTION EQUIPMENT, VEHICULAR TRAFFIC, PARKING OF VEHICLES, AND STOCKPILING OF CONSTRUCTION AND EARTH MATERIALS SHALL BE OUTSIDE THE LIMITS OF THE INFILTRATION AREA UNTIL INSTALLATION IS COMPLETED. THE SUBGRADE BENEATH THE SYSTEM SHALL NOT BE COMPACTED.

3. EXCAVATION FOR CONSTRUCTION OF THE INFILTRATION AREAS SHALL BE PERFORMED MANUALLY OR BY HYDRAULIC EXCAVATOR OR SOME OTHER SIMILAR MEANS TO ENSURE THAT THE EQUIPMENT IS NOT IN DIRECT CONTACT WITH THE NATURAL INFILTRATION EARTH MATERIAL AND DOES NOT CAUSE COMPACTION OF THE MATERIAL AND THE ENTIRE AREA IS TO BE SCARIFIED PRIOR TO INSTALLATION.

4. THE CONTRACTOR SHALL INSTALL TEMPORARY CONSTRUCTION FENCING AND EROSION CONTROLS AROUND THE PERIMETER OF THE INFILTRATION AREA TO PREVENT THE USE OF THIS AREA FOR ALL ACTIVITIES THAT MIGHT DAMAGE THE INFILTRATION CAPABILITIES OF THE AREA. THIS FENCING MAY BE REMOVED FOR BACKFILLING AND FINAL CONSTRUCTION.

SITE LEGEND

EXISTING	NEW	DESCRIPTION
℄	℄	CENTERLINE (LAYOUT)
D	D	STORM DRAIN
E	E	ELECTRIC (UNDERGROUND)
F	F	FIRE SERVICE
FD	FD	FOOTING DRAIN
G	G	GAS
OHW	OHW	OVERHEAD WIRE
		PROPERTY LINE
S	S	SANITARY SEWER
SL	SL	SITE LIGHTING SERVICE
T	T	TELEPHONE
W	W	WATER
64	64	CONTOUR
x 64.0	x 64.00	SPOT GRADE
x 64.0(BC)	x 64.00(BC)	SPOT GRADE (BOT. OF CURB)
x 64.5(TC)	x 64.50(TC)	SPOT GRADE (TOP OF CURB)
64.5(BW)	64.50(BW)	SPOT GRADE (BOT. OF WALL)
64.5(TW)	64.50(TW)	SPOT GRADE (TOP OF WALL)
BCC	BCC	BITUMINOUS CONC. CURB
CCB	CCB	CAPE COD BERM
PCC	PCC	PRECAST CONC. CURB
PCSMC	PCSMC	PRECAST SLOPED MOUNT. CURB
SGC	SGC	SLOPED GRANITE CURB
VGC	VGC	VERTICAL GRANITE CURB
		CHAINLINK FENCE (CLF)
		STOCKADE FENCE (STKF)
		BORING LOCATION
CB	CB#1	CATCH BASIN
CB(DG)	CBDG#1	DOUBLE GRATE CATCH BASIN
CTB	CTB	CONCRETE THRUST BLOCK
DMH	DMH	DRAIN MANHOLE
FES	FES	FLARED END STRUCTURE
SMH	SMH	SEWER MANHOLE
		WATER SERVICE
		UTILITY POLE
H.YD		FIRE HYDRANT
GV	GV	GATE VALVE AND CURB BOX
		HANDICAP SYMBOL (PRKG. SPACE)
		SIGN
		WETLAND
SEV	SEV	SOIL EVALUATION LOCATION
TP	TP	TEST PIT LOCATION
FDC	FDC	FIRE DEPARTMENT CONNECTION
PIV	PIV	POST INDICATOR VALVE (PIV)
E		ELECTRIC MANHOLE (EMH)
T		TELEPHONE MANHOLE (TMH)
T	T	TRANSFORMER PAD
GEN	GEN	GENERATOR PAD
GCO	GCO	GROUND CLEANOUT
LP		SIGHT LIGHT POLE
		TRAFFIC FLOW DIRECTION
		CONTINUOUS ROW OF HAYBALES
		CONTINUOUS ROW OF SILT FENCE
		PAVEMENT SAWCUT & MATCH TO EXISTING
	X.X.X	RIDOT/PROVIDENCE STD DETAIL REFERENCE

SITE PLAN LEGEND (RIDOT/PROVIDENCE STDS):

REFER CITY OF PROVIDENCE DPW STANDARDS:
www.providenceri.gov/wp-content/uploads/2019/06/Providence-DPW-Standard-Details.pdf

BCP	BITUMINOUS CONCRETE PAVEMENT 2" CLASS 12.5 HMA SURFACE 3" CLASS 19 HMA BASE 12" GRAVEL BORROW SUBBASE
12"W	12" PAVEMENT MARKINGS-CROSSWALKS & STOP BAR
LS	4" LOAM AND SEEDING, TYPE 2
6.1.0	LIGHT - DUTY ROUND FRAME AND COVER
6.2.1	HEAVY - DUTY ROUND FRAME AND COVER
6.3.2	HIGH CAPACITY FRAME AND GRATE (BICYCLE SAFE)
6.4.0	ROUND FRAME AND GATE
7.1.0	PRECAST CONCRETE CURB
7.3.0	GRANITE CURB
7.6.0	CURB SETTING DETAIL
9.9.0	CONSTRUCTION ACCESSS
20.1.0	PAVEMENT MARKINGS-ARROWS AND ONLY
43.1.0	CEMENT CONCRETE SIDEWALK
43.3.0	WHEELCHAIL RAMP
43.3.1	WHEELCHAIR RAMP FOR LIMITED RIGHT-OF-WAY AREAS
48.1.0	DETECTIBLE WARNING PANEL PLACEMENT
CLF	CHAIN LINK FENCE
DMF	DECORATIVE METAL FENCE

ABBREVIATIONS

CI	CAST IRON PIPE
CLDI	CEMENT LINED DUCTILE IRON PIPE
CLF	CHAINLINK FENCE
CTE	POINT OF CONNECTION TO EXISTING
D.I.	DUCTILE IRON PIPE
ESHWT	ESTIMATED SEASONAL HIGH WATER TABLE
ETR	EXISTING TO REMAIN
EX.	EXISTING
F&I	FURNISH AND INSTALL
HDPE	HIGH DENSITY POLYETHYLENE PIPE
INV.	INVERT ELEVATION
MTE	MATCH TO EXISTING
NIC	NOT IN CONTRACT
NTS	NOT TO SCALE
PVC	POLYVINYL CHLORIDE PIPE
RCP	REINFORCED CONCRETE PIPE
VIF	VERIFY IN FIELD
WQS	WATER QUALITY STRUCTURE

ARCHITECTS
Saccoccio & Associates, Inc.
1085 Park Avenue
Cranston, Rhode Island
02910
tel 401.942.7970
fax 401.942.7975

Consultant

GAROFALO
GAROFALO & ASSOCIATES, INC.
CIVIL & STRUCTURAL ENGINEERS\SURVEYORS
LAND PLANNERS\ENVIRONMENTAL SCIENTISTS
P.O. BOX 6145 PROVIDENCE, R.I. 02940
1-401-273-6000

Education Center & Pavilion

ROGER WILLIAMS PARK ZOO
1000 ELMWOOD AVENUE,
PROVIDENCE, RI 02907

Revision Schedule	
Revision Number	Revision Date

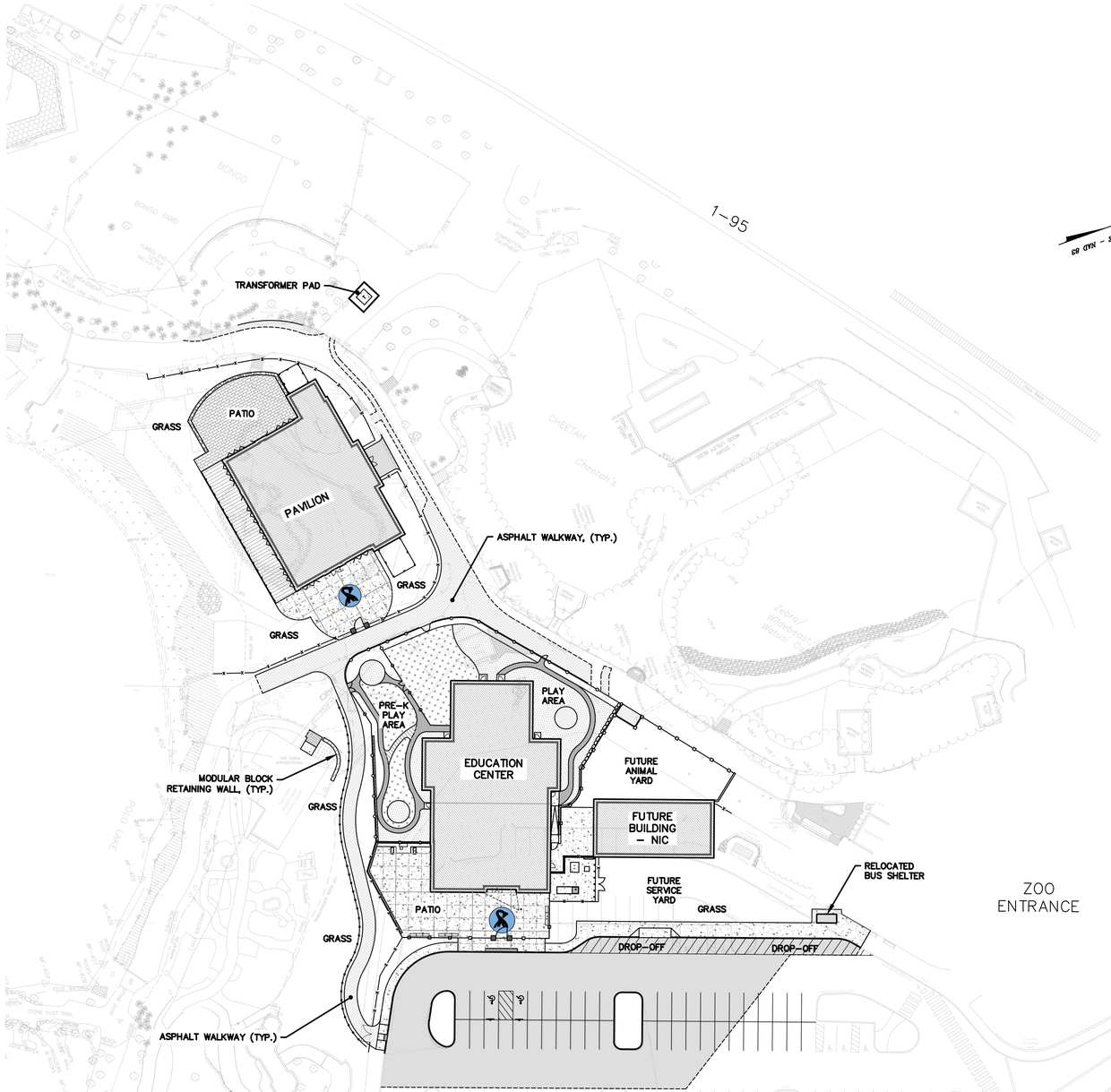

RI STATE PLANE - NAD 83

SHEET NOTE:

1. THIS PLAN IS SCHEMATIC ONLY AND PROVIDED SOLELY FOR SITE CONTEXT.

1" = 40'

feet: 0, 20, 40, 80, 160, 240
meters: 0, 5, 10, 20, 40, 60

ARCHITECTS

Saccoccio & Associates, Inc.

1085 Park Avenue
Cranston, Rhode Island
02910

tel 401.942.7970
fax 401.942.7975

Consultant

GAROFALO

GAROFALO & ASSOCIATES, INC.
CIVIL & STRUCTURAL ENGINEERS\SURVEYORS
LAND PLANNERS\ENVIRONMENTAL SCIENTISTS
P.O. BOX 6145 PROVIDENCE, R.I. 02940
1-401-273-6000

Education Center & Pavilion

ROGER WILLIAMS PARK ZOO

1000 ELMWOOD AVENUE,
PROVIDENCE, RI 02907

Revision Schedule	
Revision Number	Revision Date

ISSUED FOR BID
AUGUST 19, 2024

SHEET TITLE

OVERALL PLAN

DRAWN BY: KYY	JOB NUMBER: 7213-00
CHECKED BY: SSH	DATE: 08/19/2024

C-2.0

SHEET: 3 OF: 13

L:\7213-00 Roger Williams Park Zoo (Saccoccio) - Providence, RI\dwg\01-Current\7213-00-base_r2.dwg 08/16/2024 kyingying 13:18

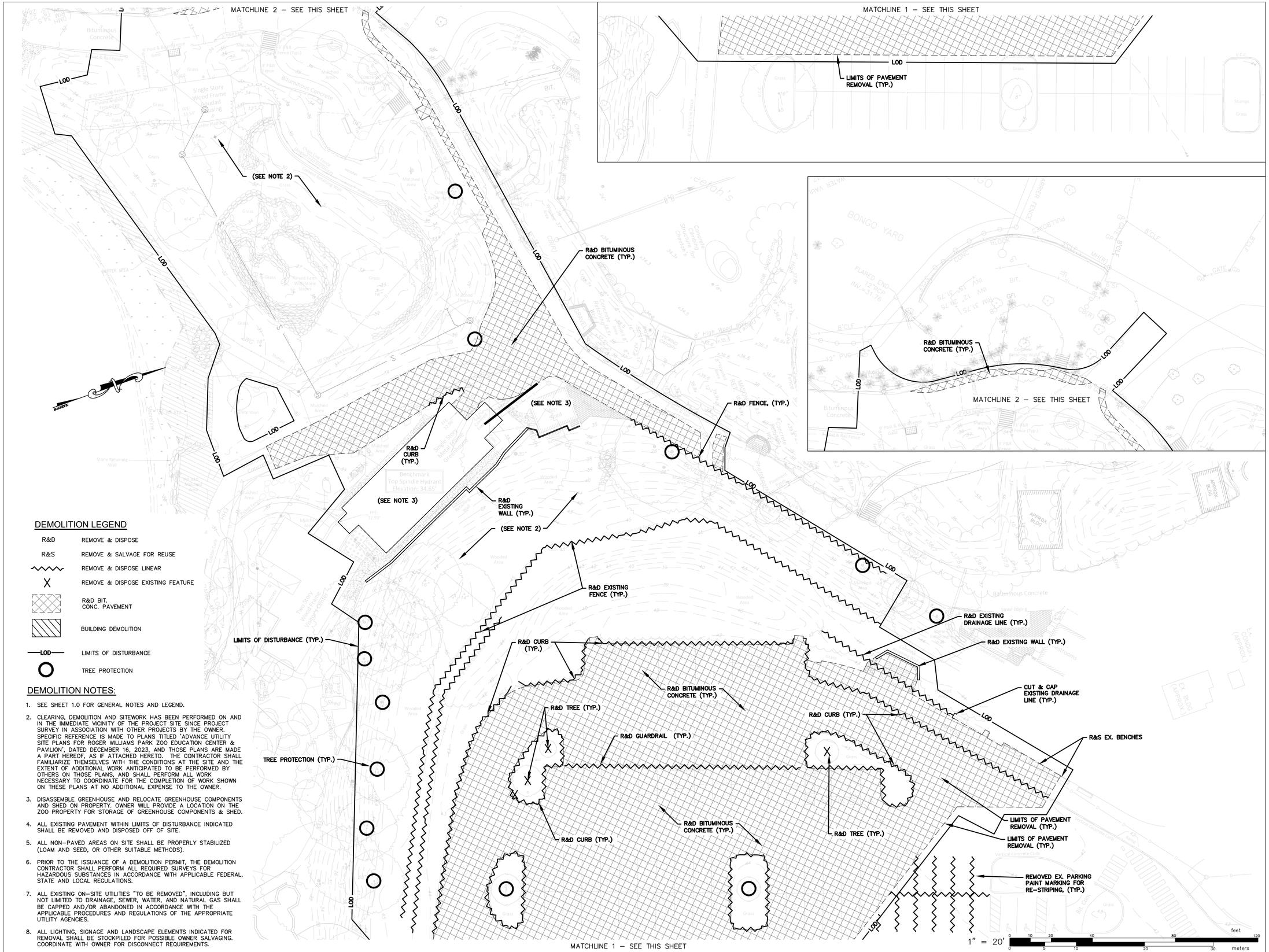

DEMOLITION LEGEND

R&D	REMOVE & DISPOSE
R&S	REMOVE & SALVAGE FOR REUSE
	REMOVE & DISPOSE LINEAR
X	REMOVE & DISPOSE EXISTING FEATURE
	R&D BIT. CONC. PAVEMENT
	BUILDING DEMOLITION
LOD	LIMITS OF DISTURBANCE
	TREE PROTECTION

DEMOLITION NOTES:

1. SEE SHEET 1.0 FOR GENERAL NOTES AND LEGEND.
2. CLEARING, DEMOLITION AND SITEWORK HAS BEEN PERFORMED ON AND IN THE IMMEDIATE VICINITY OF THE PROJECT SITE SINCE PROJECT SURVEY IN ASSOCIATION WITH OTHER PROJECTS BY THE OWNER. SPECIFIC REFERENCE IS MADE TO PLANS TITLED 'ADVANCE UTILITY SITE PLANS FOR ROGER WILLIAMS PARK ZOO EDUCATION CENTER & PAVILION', DATED DECEMBER 16, 2023, AND THOSE PLANS ARE MADE A PART HEREOF, AS IF ATTACHED HERETO. THE CONTRACTOR SHALL FAMILIARIZE THEMSELVES WITH THE CONDITIONS AT THE SITE AND THE EXTENT OF ADDITIONAL WORK ANTICIPATED TO BE PERFORMED BY OTHERS ON THOSE PLANS, AND SHALL PERFORM ALL WORK NECESSARY TO COORDINATE FOR THE COMPLETION OF WORK SHOWN ON THESE PLANS AT NO ADDITIONAL EXPENSE TO THE OWNER.
3. DISASSEMBLE GREENHOUSE AND RELOCATE GREENHOUSE COMPONENTS AND SHED ON PROPERTY. OWNER WILL PROVIDE A LOCATION ON THE ZOO PROPERTY FOR STORAGE OF GREENHOUSE COMPONENTS & SHED.
4. ALL EXISTING PAVEMENT WITHIN LIMITS OF DISTURBANCE INDICATED SHALL BE REMOVED AND DISPOSED OFF OF SITE.
5. ALL NON-PAVED AREAS ON SITE SHALL BE PROPERLY STABILIZED (LOAM AND SEED, OR OTHER SUITABLE METHODS).
6. PRIOR TO THE ISSUANCE OF A DEMOLITION PERMIT, THE DEMOLITION CONTRACTOR SHALL PERFORM ALL REQUIRED SURVEYS FOR HAZARDOUS SUBSTANCES IN ACCORDANCE WITH APPLICABLE FEDERAL, STATE AND LOCAL REGULATIONS.
7. ALL EXISTING ON-SITE UTILITIES "TO BE REMOVED", INCLUDING BUT NOT LIMITED TO DRAINAGE, SEWER, WATER, AND NATURAL GAS SHALL BE CAPPED AND/OR ABANDONED IN ACCORDANCE WITH THE APPLICABLE PROCEDURES AND REGULATIONS OF THE APPROPRIATE UTILITY AGENCIES.
8. ALL LIGHTING, SIGNAGE AND LANDSCAPE ELEMENTS INDICATED FOR REMOVAL SHALL BE STOCKPILED FOR POSSIBLE OWNER SALVAGING. COORDINATE WITH OWNER FOR DISCONNECT REQUIREMENTS.

ARCHITECTS

Saccoccio & Associates, Inc.

1085 Park Avenue
Cranston, Rhode Island
02910

tel 401.942.7970
fax 401.942.7975

Consultant

GAROFALO

GAROFALO & ASSOCIATES, INC.
CIVIL & STRUCTURAL ENGINEERS\SURVEYORS
LAND PLANNERS\ENVIRONMENTAL SCIENTISTS
P.O. BOX 6145 PROVIDENCE, R.I. 02940
1-401-273-6000

Education Center & Pavilion

ROGER WILLIAMS PARK ZOO

1000 ELMWOOD AVENUE,
PROVIDENCE, RI 02907

Revision Schedule	
Revision Number	Revision Date

ISSUED FOR BID
AUGUST 19, 2024

SHEET TITLE

DEMOLITION PLAN

DRAWN BY: KYY	JOB NUMBER: 7213-00
CHECKED BY: SSH	DATE: 08/19/2024

C-3.0

SHEET: 4 OF: 13

L:\7213-00 Roger Williams Park Zoo (Saccoccio) - Providence, RI\dwg\01-Current\7213-00-DEM0.dwg 08/16/2024 kyingyang 09:30

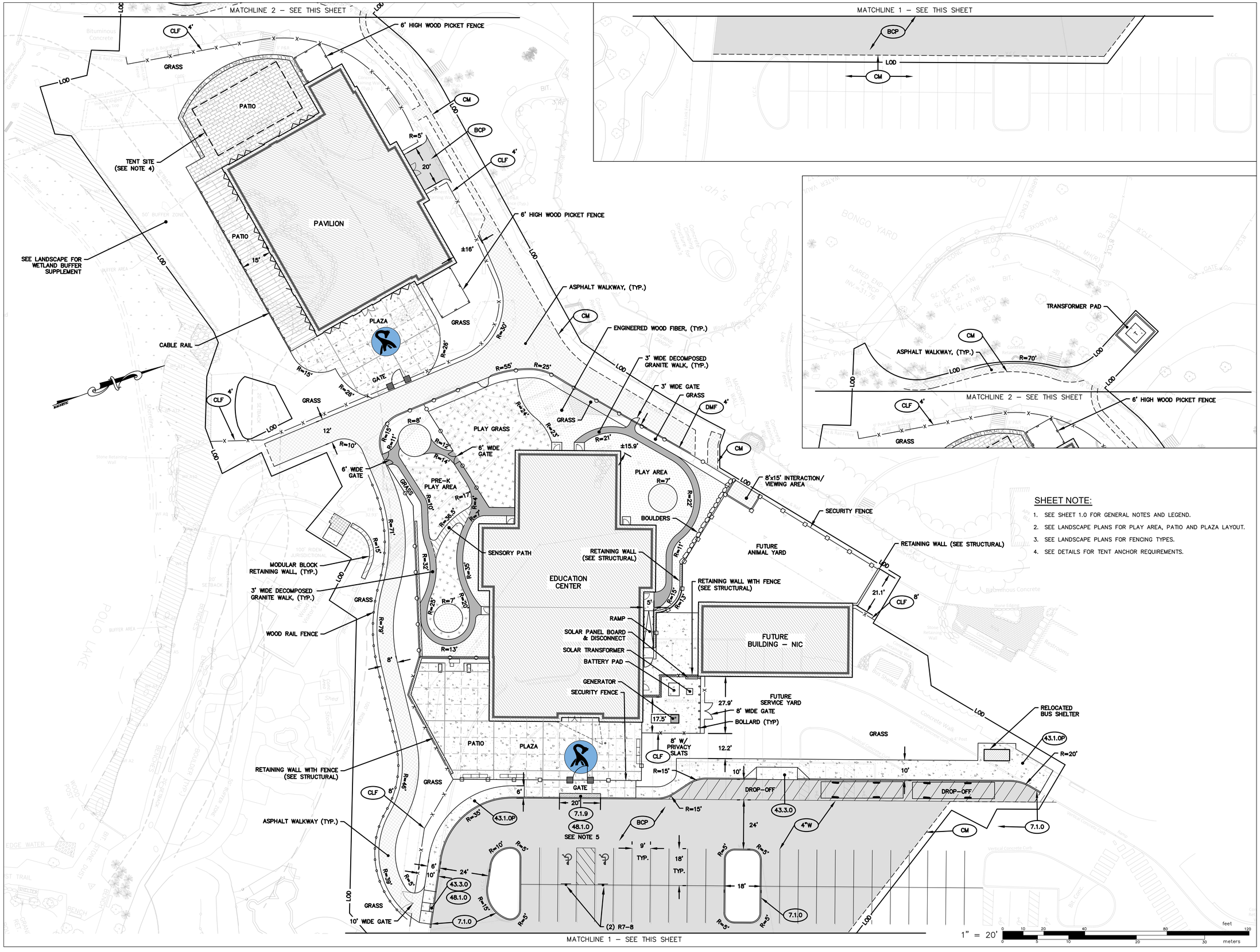

SHEET NOTE:

1. SEE SHEET 1.0 FOR GENERAL NOTES AND LEGEND.
2. SEE LANDSCAPE PLANS FOR PLAY AREA, PATIO AND PLAZA LAYOUT.
3. SEE LANDSCAPE PLANS FOR FENCING TYPES.
4. SEE DETAILS FOR TENT ANCHOR REQUIREMENTS.

SZ ARCHITECTS

Saccoccio & Associates, Inc.
1085 Park Avenue
Cranston, Rhode Island
02910
tel 401.942.7970
fax 401.942.7975

Consultant

GAROFALO
GAROFALO & ASSOCIATES, INC.
CIVIL & STRUCTURAL ENGINEERS\SURVEYORS
LAND PLANNERS\ENVIRONMENTAL SCIENTISTS
P.O. BOX 6145 PROVIDENCE, R.I. 02940
1-401-273-6000

Education Center & Pavilion

ROGER WILLIAMS PARK ZOO
1000 ELMWOOD AVENUE,
PROVIDENCE, RI 02907

Revision Schedule	
Revision Number	Revision Date

ISSUED FOR BID
AUGUST 19, 2024

SHEET TITLE
SITE PLAN

DRAWN BY:	KYY	JOB NUMBER:	7213-00
CHECKED BY:	SSH	DATE:	08/19/2024

C-4.0

SHEET: 5 OF: 13

L:\7213-00 Roger Williams Park Zoo (Saccoccio) – Providence, RI\dwg\01-Current\7213-00-base_r2.dwg 08/16/2024 kyingyang 13:19

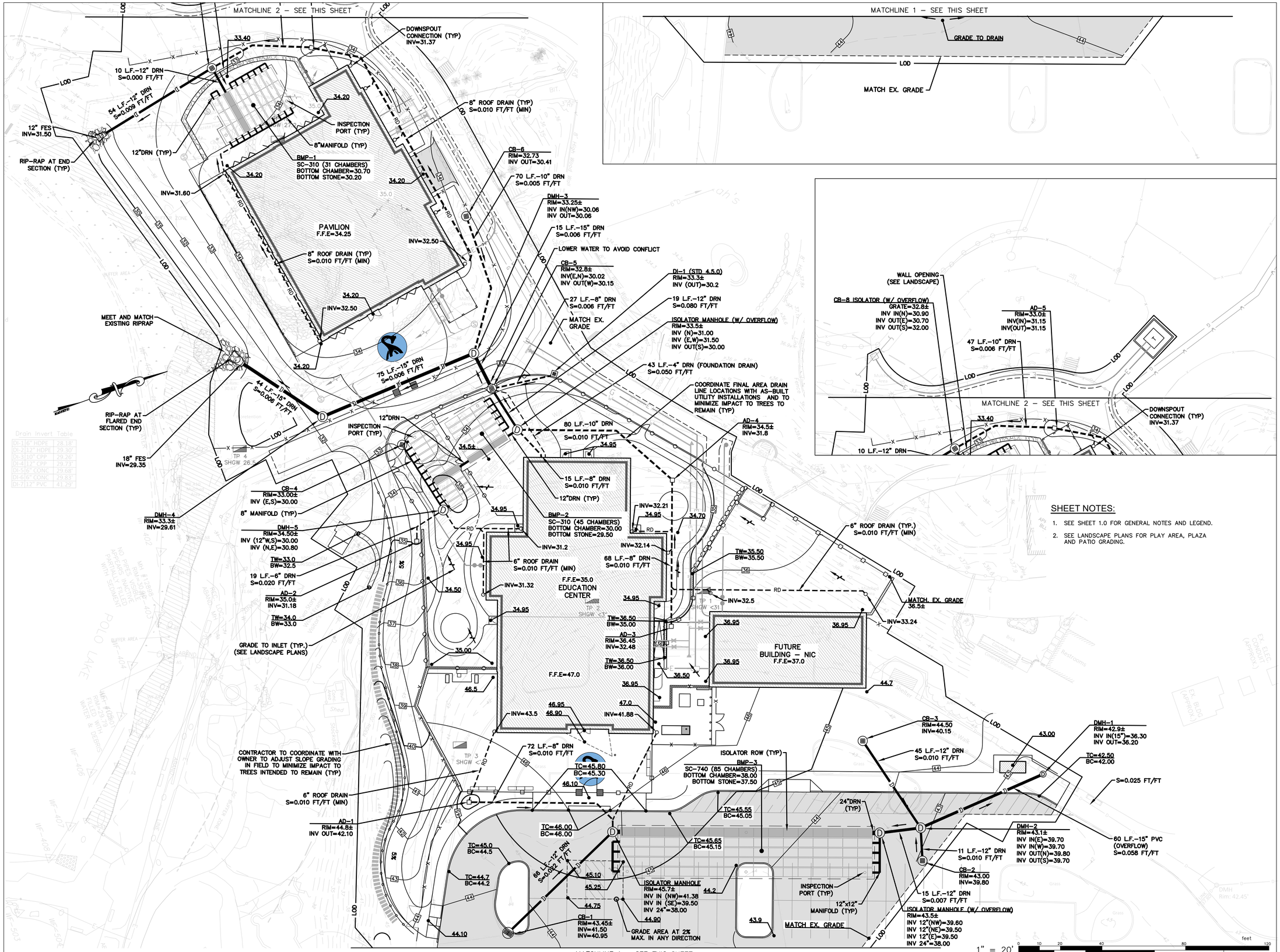

SHEET NOTES:

1. SEE SHEET 1.0 FOR GENERAL NOTES AND LEGEND.
2. SEE LANDSCAPE PLANS FOR PLAY AREA, PLAZA AND PATIO GRADING.

ARCHITECTS

Saccoccio & Associates, Inc.

1085 Park Avenue
Cranston, Rhode Island
02910

tel 401.942.7970
fax 401.942.7975

Consultant

GAROFALO

GAROFALO & ASSOCIATES, INC.
CIVIL & STRUCTURAL ENGINEERS\SURVEYORS
LAND PLANNERS\ENVIRONMENTAL SCIENTISTS
P.O. BOX 6145 PROVIDENCE, R.I. 02940
1-401-273-6000

Education Center & Pavilion

ROGER WILLIAMS PARK ZOO

1000 ELMWOOD AVENUE,
PROVIDENCE, RI 02907

Revision Schedule	
Revision Number	Revision Date

ISSUED FOR BID
AUGUST 19, 2024

SHEET TITLE

GRADING & DRAINAGE PLAN

DRAWN BY:	RAS	JOB NUMBER:	7213-00
CHECKED BY:	SSH	DATE:	08/19/2024

C-5.0

SHEET: 6 OF: 13

L:\7213-00 Roger Williams Park Zoo (Saccoccio) – Providence, RI\dwg\01-Current\7213-00-grading_r2.dwg 08/16/2024 kyingyang 13:10

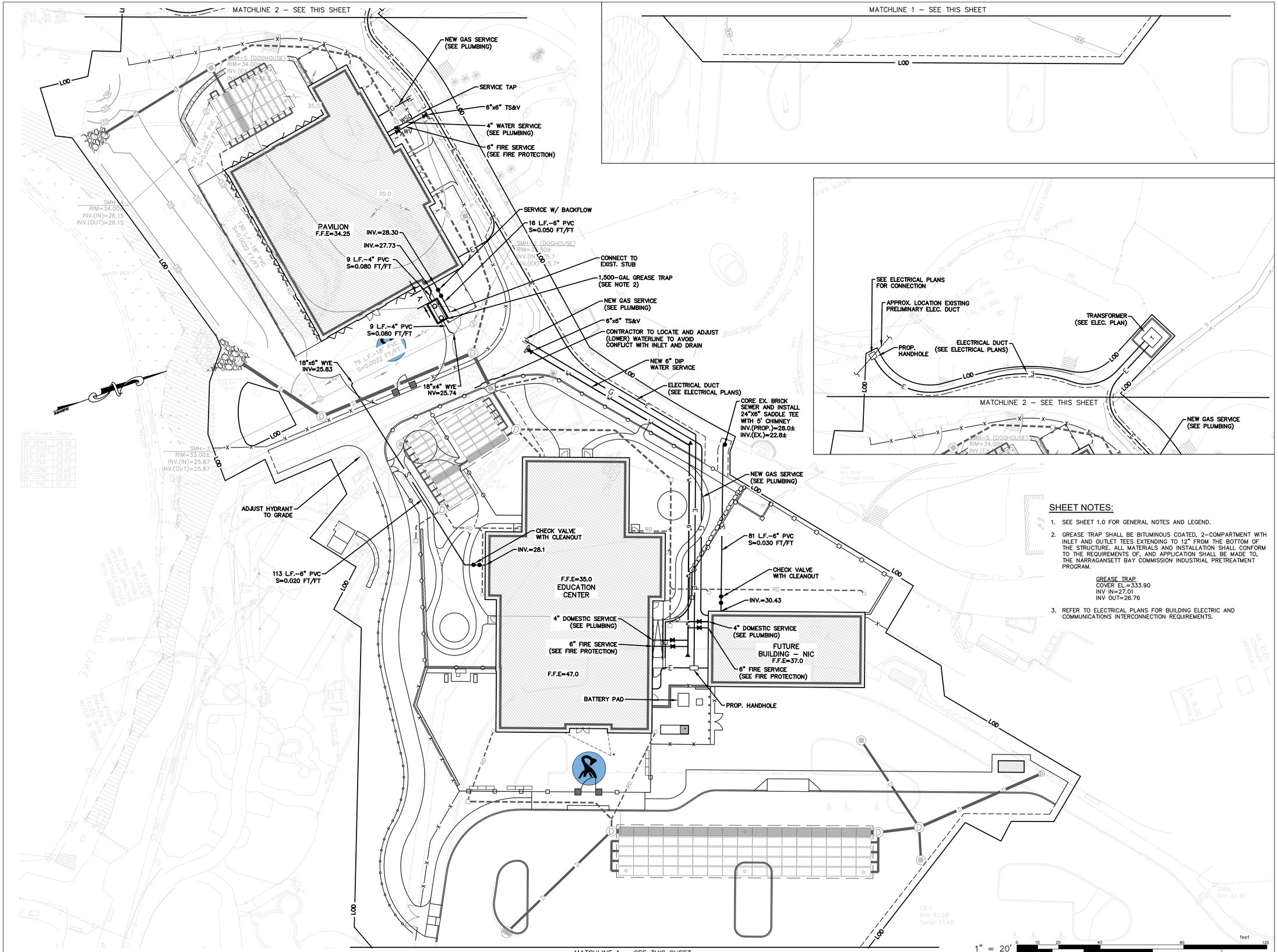

SHEET NOTES:

1. SEE SHEET 1.0 FOR GENERAL NOTES AND LEGEND.
2. GREASE TRAP SHALL BE BITUMINOUS COATED, 2–COMPARTMENT WITH INLET AND OUTLET TEES EXTENDING TO 12" FROM THE BOTTOM OF THE STRUCTURE. ALL MATERIALS AND INSTALLATION SHALL CONFORM TO THE REQUIREMENTS OF, AND APPLICATION SHALL BE MADE TO, THE NARRAGANSETT BAY COMMISSION INDUSTRIAL PRETREATMENT PROGRAM.

   GREASE TRAP
   COVER EL.=333.90
   INV IN=27.01
   INV OUT=26.76
3. REFER TO ELECTRICAL PLANS FOR BUILDING ELECTRIC AND COMMUNICATIONS INTERCONNECTION REQUIREMENTS.

ARCHITECTS

Saccoccio & Associates, Inc.

1085 Park Avenue
Cranston, Rhode Island
02910

tel 401.942.7970
fax 401.942.7975

Consultant

GAROFALO

GAROFALO & ASSOCIATES, INC.
CIVIL & STRUCTURAL ENGINEERS\SURVEYORS
LAND PLANNERS\ENVIRONMENTAL SCIENTISTS
P.O. BOX 6145 PROVIDENCE, R.I. 02940
1-401-273-6000

Education Center & Pavilion

ROGER WILLIAMS PARK ZOO

1000 ELMWOOD AVENUE,
PROVIDENCE, RI 02907

Revision Schedule	
Revision Number	Revision Date

ISSUED FOR BID
AUGUST 19, 2024

SHEET TITLE

UTILITIES PLAN

DRAWN BY: KYY	JOB NUMBER: 7213-00
CHECKED BY: SSH	DATE: 08/19/2024

C-6.0

SHEET: 7 OF: 13

L:\7213-00 Roger Williams Park Zoo (Saccoccio) – Providence, RI\dwg\01-current\7213-00-grading_r2.dwg 08/16/2024 kyingyong 13:11

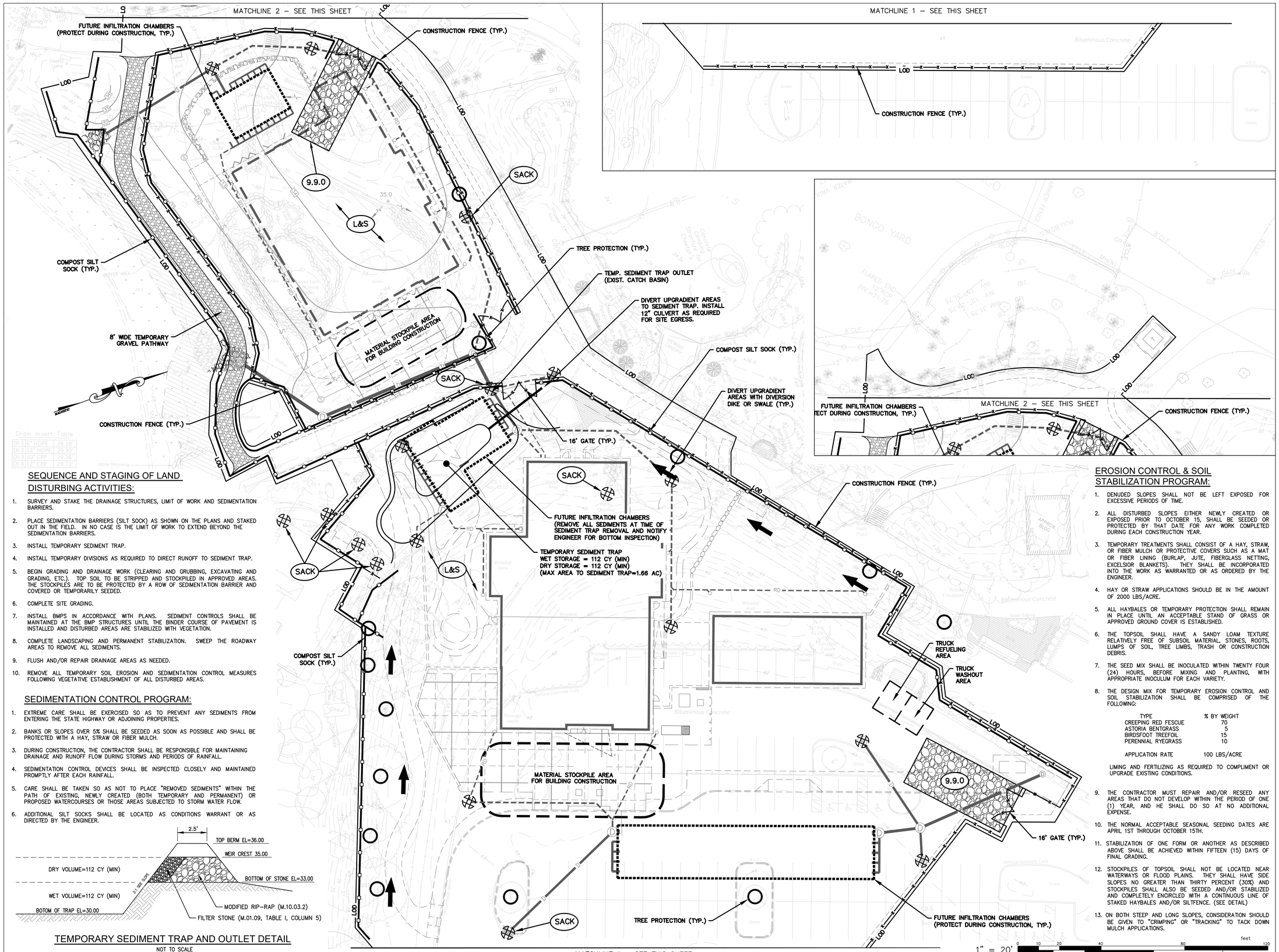

SEQUENCE AND STAGING OF LAND DISTURBING ACTIVITIES:

1. SURVEY AND STAKE THE DRAINAGE STRUCTURES, LIMIT OF WORK AND SEDIMENTATION BARRIERS.
2. PLACE SEDIMENTATION BARRIERS (SILT SOCK) AS SHOWN ON THE PLANS AND STAKED OUT IN THE FIELD. IN NO CASE IS THE LIMIT OF WORK TO EXTEND BEYOND THE SEDIMENTATION BARRIERS.
3. INSTALL TEMPORARY SEDIMENT TRAP.
4. INSTALL TEMPORARY DIVISIONS AS REQUIRED TO DIRECT RUNOFF TO SEDIMENT TRAP.
5. BEGIN GRADING AND DRAINAGE WORK (CLEARING AND GRUBBING, EXCAVATING AND GRADING, ETC.). TOP SOIL TO BE STRIPPED AND STOCKPILED IN APPROVED AREAS. THE STOCKPILES ARE TO BE PROTECTED BY A ROW OF SEDIMENTATION BARRIER AND COVERED OR TEMPORARILY SEEDED.
6. COMPLETE SITE GRADING.
7. INSTALL BMPS IN ACCORDANCE WITH PLANS. SEDIMENT CONTROLS SHALL BE MAINTAINED AT THE BMP STRUCTURES UNTIL THE BINDER COURSE OF PAVEMENT IS INSTALLED AND DISTURBED AREAS ARE STABILIZED WITH VEGETATION.
8. COMPLETE LANDSCAPING AND PERMANENT STABILIZATION. SWEEP THE ROADWAY AREAS TO REMOVE ALL SEDIMENTS.
9. FLUSH AND/OR REPAIR DRAINAGE AREAS AS NEEDED.
10. REMOVE ALL TEMPORARY SOIL EROSION AND SEDIMENTATION CONTROL MEASURES FOLLOWING VEGETATIVE ESTABLISHMENT OF ALL DISTURBED AREAS.

SEDIMENTATION CONTROL PROGRAM:

1. EXTREME CARE SHALL BE EXERCISED SO AS TO PREVENT ANY SEDIMENTS FROM ENTERING THE STATE HIGHWAY OR ADJOINING PROPERTIES.
2. BANKS OR SLOPES OVER 5% SHALL BE SEEDED AS SOON AS POSSIBLE AND SHALL BE PROTECTED WITH A HAY, STRAW OR FIBER MULCH.
3. DURING CONSTRUCTION, THE CONTRACTOR SHALL BE RESPONSIBLE FOR MAINTAINING DRAINAGE AND RUNOFF FLOW DURING STORMS AND PERIODS OF RAINFALL.
4. SEDIMENTATION CONTROL DEVICES SHALL BE INSPECTED CLOSELY AND MAINTAINED PROMPTLY AFTER EACH RAINFALL.
5. CARE SHALL BE TAKEN SO AS NOT TO PLACE "REMOVED SEDIMENTS" WITHIN THE PATH OF EXISTING, NEWLY CREATED (BOTH TEMPORARY AND PERMANENT) OR PROPOSED WATERCOURSES OR THOSE AREAS SUBJECTED TO STORM WATER FLOW.
6. ADDITIONAL SILT SOCKS SHALL BE LOCATED AS CONDITIONS WARRANT OR AS DIRECTED BY THE ENGINEER.

TEMPORARY SEDIMENT TRAP AND OUTLET DETAIL

NOT TO SCALE

EROSION CONTROL & SOIL STABILIZATION PROGRAM:

1. DENUDED SLOPES SHALL NOT BE LEFT EXPOSED FOR EXCESSIVE PERIODS OF TIME.
2. ALL DISTURBED SLOPES EITHER NEWLY CREATED OR EXPOSED PRIOR TO OCTOBER 15, SHALL BE SEEDED OR PROTECTED BY THAT DATE FOR ANY WORK COMPLETED DURING EACH CONSTRUCTION YEAR.
3. TEMPORARY TREATMENTS SHALL CONSIST OF A HAY, STRAW, OR FIBER MULCH OR PROTECTIVE COVERS SUCH AS A MAT OR FIBER LINING (BURLAP, JUTE, FIBERGLASS NETTING, EXCELSIOR BLANKETS). THEY SHALL BE INCORPORATED INTO THE WORK AS WARRANTED OR AS ORDERED BY THE ENGINEER.
4. HAY OR STRAW APPLICATIONS SHOULD BE IN THE AMOUNT OF 2000 LBS/ACRE.
5. ALL HAYBALES OR TEMPORARY PROTECTION SHALL REMAIN IN PLACE UNTIL AN ACCEPTABLE STAND OF GRASS OR APPROVED GROUND COVER IS ESTABLISHED.
6. THE TOPSOIL SHALL HAVE A SANDY LOAM TEXTURE RELATIVELY FREE OF SUBSOIL MATERIAL, STONES, ROOTS, LUMPS OF SOIL, TREE LIMBS, TRASH OR CONSTRUCTION DEBRIS.
7. THE SEED MIX SHALL BE INOCULATED WITHIN TWENTY FOUR (24) HOURS, BEFORE MIXING AND PLANTING, WITH APPROPRIATE INOCULUM FOR EACH VARIETY.
8. THE DESIGN MIX FOR TEMPORARY EROSION CONTROL AND SOIL STABILIZATION SHALL BE COMPRISED OF THE FOLLOWING:

TYPE	% BY WEIGHT
CREEPING RED FESCUE	70
ASTORIA BENTGRASS	5
BIRDSFOOT TREEFOIL	15
PERENNIAL RYEGRASS	10
APPLICATION RATE	100 LBS/ACRE

LIMING AND FERTILIZING AS REQUIRED TO COMPLIMENT OR UPGRADE EXISTING CONDITIONS.

9. THE CONTRACTOR MUST REPAIR AND/OR RESEED ANY AREAS THAT DO NOT DEVELOP WITHIN THE PERIOD OF ONE (1) YEAR, AND HE SHALL DO SO AT NO ADDITIONAL EXPENSE.
10. THE NORMAL ACCEPTABLE SEASONAL SEEDING DATES ARE APRIL 1ST THROUGH OCTOBER 15TH.
11. STABILIZATION OF ONE FORM OR ANOTHER AS DESCRIBED ABOVE SHALL BE ACHIEVED WITHIN FIFTEEN (15) DAYS OF FINAL GRADING.
12. STOCKPILES OF TOPSOIL SHALL NOT BE LOCATED NEAR WATERWAYS OR FLOOD PLAINS. THEY SHALL HAVE SIDE SLOPES NO GREATER THAN THIRTY PERCENT (30%) AND STOCKPILES SHALL ALSO BE SEEDED AND/OR STABILIZED AND COMPLETELY ENCIRCLED WITH A CONTINUOUS LINE OF STAKED HAYBALES AND/OR SILTFENCE. (SEE DETAIL)
13. ON BOTH STEEP AND LONG SLOPES, CONSIDERATION SHOULD BE GIVEN TO "CRIMPING" OR "TRACKING" TO TACK DOWN MULCH APPLICATIONS.

1" = 20'

feet 0 10 20 40 80 120

meters 0 5 10 20 30

ARCHITECTS
Saccoccio & Associates, Inc.
1085 Park Avenue
Cranston, Rhode Island
02910
tel 401.942.7970
fax 401.942.7975
Consultant

GAROFALO
GAROFALO & ASSOCIATES, INC.
CIVIL & STRUCTURAL ENGINEERS\SURVEYORS
LAND PLANNERS\ENVIRONMENTAL SCIENTISTS
P.O. BOX 6145 PROVIDENCE, R.I. 02940
1-401-273-6000

Education Center & Pavilion

ROGER WILLIAMS PARK ZOO
1000 ELMWOOD AVENUE,
PROVIDENCE, RI 02907

Revision Schedule	
Revision Number	Revision Date

ISSUED FOR BID
AUGUST 19, 2024

SHEET TITLE

SOIL EROSION & SEDIMENT CONTROL PLAN

DRAWN BY: KYY	JOB NUMBER: 7213-00
CHECKED BY: SSH	DATE: 08/19/2024

C-7.0

SHEET: 8 OF: 13

L:\7213-00 Roger Williams Park Zoo (Saccoccio) - Providence, RI\dwg\01-Current\7213-00-sesc.dwg 08/16/2024 kyingyang 08:56

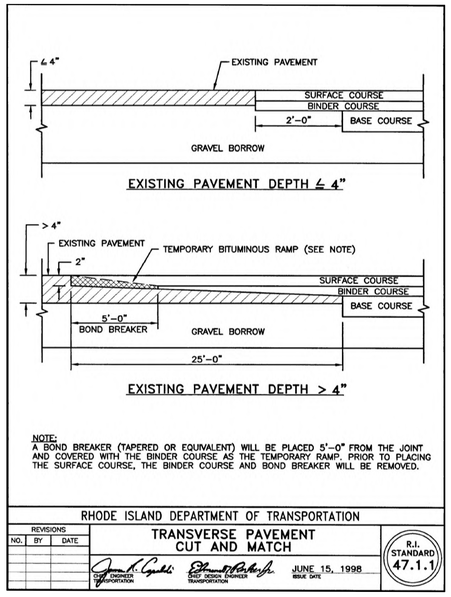

NOTE:
A BOND BREAKER (TAPERED OR EQUIVALENT) WILL BE PLACED 5'-0" FROM THE JOINT AND COVERED WITH THE BINDER COURSE AS THE TEMPORARY RAMP. PRIOR TO PLACING THE SURFACE COURSE, THE BINDER COURSE AND BOND BREAKER WILL BE REMOVED.

RHODE ISLAND DEPARTMENT OF TRANSPORTATION

REVISIONS		
NO.	BY	DATE

TRANSVERSE PAVEMENT CUT AND MATCH

JUNE 15, 1998 (ISSUE DATE)

R.I. STANDARD 47.1.1

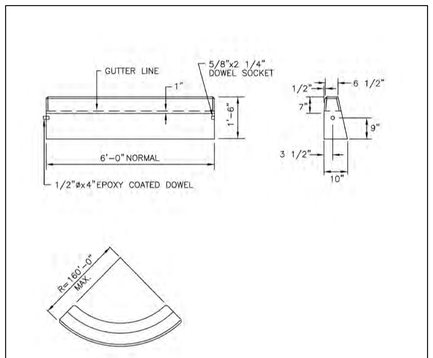

NOTES:
1. SHALL BE IN ACCORDANCE WITH SECTION 906 OF THE R.I. STANDARD SPECIFICATIONS.
2. MINIMUM LENGTH OF STRAIGHT OR CIRCULAR FILLER PIECES TO BE 3'-0".
3. EXPOSED SURFACES TO HAVE A SPONGE FLOAT FINISH.
4. CIRCULAR CURB IS REQUIRED ON CURVES WITH RADII OF 160'-0" OR LESS. STRAIGHT CURB TO BE USED ON CURVES OF MORE THAN 160'-0"RADIUS.
5. EXPOSED EDGES TO HAVE A 3/4" CHAMFER.

RHODE ISLAND DEPARTMENT OF TRANSPORTATION

REVISIONS		
NO.	BY	DATE
1	MLP	Mar 05

PRECAST CONCRETE CURB

JUNE 15, 1998 (ISSUE DATE)

R.I. STANDARD 7.1.0

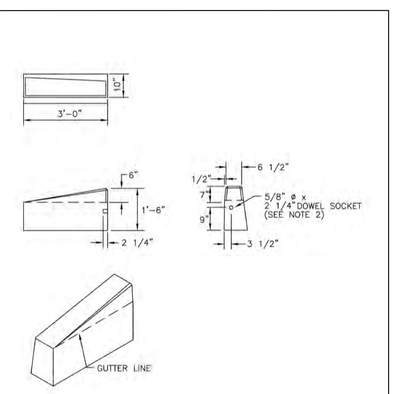

NOTES:
1. SHALL BE IN ACCORDANCE WITH SECTION 906 OF THE R.I. STANDARD SPECIFICATIONS.
2. DRAWING SHOWS TRANSITION CURB FOR ONE DIRECTION, FOR OTHER DIRECTION USE OPPOSITE HAND AND INCLUDE A 1/2" ø x 4" EPOXY COATED DOWEL.
3. EXPOSED SURFACES TO HAVE A SPONGE FLOAT FINISH.
4. EXPOSED EDGES TO HAVE A 3/4" CHAMFER.
5. LEFT AND RIGHT SECTIONS SHALL BE INSTALLED AS REQUIRED.

RHODE ISLAND DEPARTMENT OF TRANSPORTATION

REVISIONS		
NO.	BY	DATE
1	MLP	Mar 05
2	MLP	06/01/10

3'-0" PRECAST CONCRETE TRANSITION CURB

JUNE 15, 1998 (ISSUE DATE)

R.I. STANDARD 7.1.1

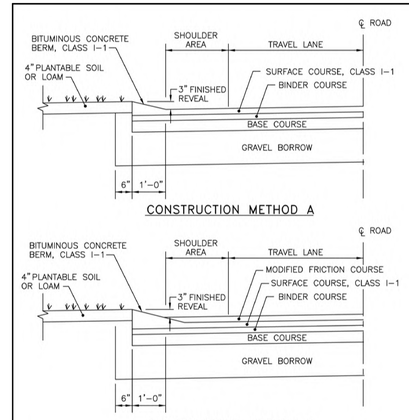

NOTES:
1. SHALL BE IN ACCORDANCE WITH SECTION 906 OF THE R.I. STANDARD SPECIFICATIONS.
2. BITUMINOUS BERM CAN BE PLACED AT THE SAME TIME THAT THE SURFACE COURSE LAYER IS PLACED ON THE PROJECT ROADWAY, OR IT CAN BE INSTALLED IN A SEPARATE OPERATION.

RHODE ISLAND DEPARTMENT OF TRANSPORTATION

REVISIONS		
NO.	BY	DATE
1	MLP	Mar 05

BITUMINOUS BERM

JUNE 15, 1998 (ISSUE DATE)

R.I. STANDARD 7.5.1

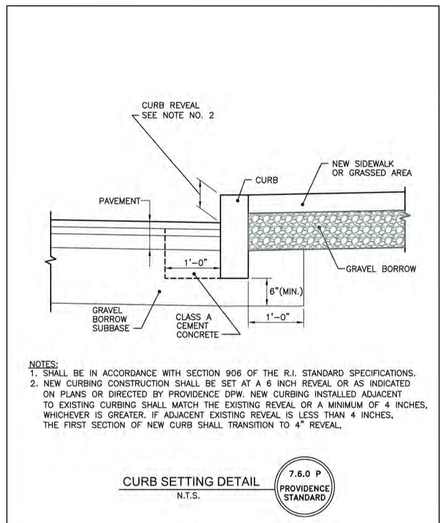

NOTES:
1. SHALL BE IN ACCORDANCE WITH SECTION 906 OF THE R.I. STANDARD SPECIFICATIONS.
2. NEW CURBING CONSTRUCTION SHALL BE SET AT A 6 INCH REVEAL OR AS INDICATED ON PLANS OR DIRECTED BY PROVIDENCE DPW. NEW CURBING INSTALLED ADJACENT TO EXISTING CURBING SHALL MATCH THE EXISTING REVEAL OR A MINIMUM OF 4 INCHES, WHICHEVER IS GREATER. IF ADJACENT EXISTING REVEAL IS LESS THAN 4 INCHES, THE FIRST SECTION OF NEW CURB SHALL TRANSITION TO 4" REVEAL.

CURB SETTING DETAIL
N.T.S.

7.6.0 P PROVIDENCE STANDARD

ISSUE DATE: 1/6/17

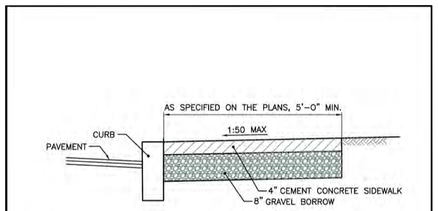

NOTES
1. SHALL BE IN ACCORDANCE WITH SECTION 905 OF THE R.I. STANDARD SPECIFICATIONS.
2. SEE CURB SETTING DETAIL WHERE APPLICABLE.
3. RUNNING SLOPE OF SIDEWALK SHALL NOT EXCEED 8.3% (1:12). TYPICALLY, RUNNING SLOPE SHALL MATCH ROAD SLOPE.
4. CROSS SLOPE OF SIDEWALK SHALL NOT EXCEED 2% (1:50).
5. SIDEWALK MAY BE SUBJECT TO GRASS STRIP INSTALLATION. CONSULT WITH DPW ENGINEERING
6. GRAVEL BORROW BASE SHALL COMPACT TO ACHEIVE SOIL DENSITY VALUES OF 95% MODIFIED PROCTOR DENSITY (AASHTO T180).
7. SIDEWALK REPAIRS TWENTY FEET OR LONGER ARE SUBJECT TO REQUIREMENTS HEREIN. SIDEWALK REPAIRS SHORTER THAN TWENTY FEET SHALL MAKE EVERY EFFORT TO MEET REQUIRED SLOPES.
8. CONTROLL JOINTS SHALL BE INSTALLED EVERY 5 FEET IN EACH DIRECTION.
9. EXPANSION JOINTS SHALL BE INSTALLED EVERY 20 FEET IN EACH DIRECTION AT FOUNDATIONS AND WALLS AND IN A SQUARE PATTERN AROUND MANHOLE COVERS, HYDRANTS, SIGN POSTS AND UTILITY POLES. THE EXPANSION JOINT SHALL BE THE FULL DEPTH OF THE SIDEWALK AND FILLED WITH AN APPROVED TYPE OF PREMOLDED EXPANSION JOINT FILLER.

CEMENT CONCRETE SIDEWALK
N.T.S.

43.1.0 P PROVIDENCE STANDARD

ISSUE DATE: 1/6/17

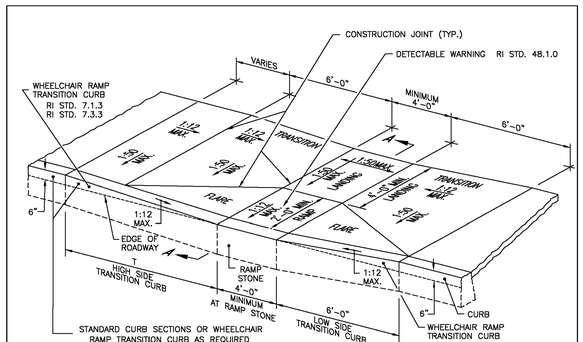

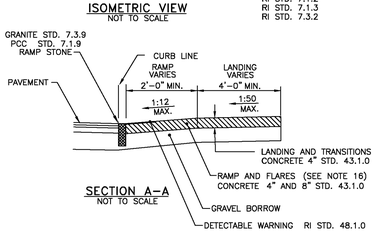

ROADWAY PROFILE GRADE	T (FT.)
0.00	6.0
0.01	7.0
0.02	8.0
0.03	9.5
0.04	11.5
0.05	15.0

NOTES:
1. SHALL BE IN ACCORDANCE WITH SECTION 905 OF THE RI STANDARD SPECIFICATIONS.
2. WHEN ANY OBSTRUCTION LOCATED IN THE SIDEWALK FALLS WITHIN A CROSSWALK AREA, THE WHEELCHAIR RAMP SHALL BE PLACED SUCH THAT THE OBSTRUCTION FALLS OUTSIDE OF THE RAMP.
3. AT NO TIME IS ANY PART OF THE WHEELCHAIR RAMP TO BE LOCATED OUTSIDE OF THE CROSSWALK, AND IT IS TO BE CENTERED WHENEVER POSSIBLE.
4. DRAINAGE FACILITIES ARE TO BE LOCATED UP-GRADE OF ALL WHEELCHAIR RAMPS.
5. LOCATION OF WHEELCHAIR RAMPS IS AS SHOWN ON CONTRACT DRAWINGS.
6. IN NO INSTANCE SHALL THE SIDEWALK CROSS SLOPE EXCEED 1:50 EXCEPT WITHIN THE RAMP AREA.
7. AN UNOBSTRUCTED PATH OF TRAVEL WITH A MINIMUM WIDTH OF 4'-0" SHALL BE MAINTAINED.
8. THE WHEELCHAIR RAMP SLOPE AND SIDE SLOPES (TRANSITIONS), MUST NOT BE STEEPER THAN 1:12. HOWEVER, THESE SLOPES MAY BE FLATTER THAN 1:12 WHEN WARRANTED BY SURROUNDING CONDITIONS.
9. WHERE THE ROAD PROFILE EXCEEDS 5% THE HIGH SIDE TRANSITION LENGTH (T) SHALL BE EIGHTEEN FEET (18'-0").
10. IN NO CASE, WHERE A STOP LINE IS WARRANTED, SHALL A RAMP BE PLACED BEHIND THE STOP LINE.
11. THE ENTRANCE OF THE WHEELCHAIR RAMP SHALL BE FLUSH WITH THE ROADWAY.
12. THE WHEELCHAIR RAMP SHALL BE CENTERED RADIALLY, OPPOSITE THE RADIUS POINT WHEN POSSIBLE.
13. MINIMUM LENGTH OF STRAIGHT OR CIRCULAR FILLER PIECES TO BE 3'-0" (GREATER LENGTHS PREFERRED).
14. ALL REQUIRED CUTTING OF CURB PIECES TO BE PAID FOR UNDER COST OF CURB.
15. DETECTABLE WARNINGS TO BE PAID FOR UNDER SECTION 942 OF THE RI STANDARD SPECIFICATIONS
16. 8" CONCRETE DEPTH FOR RADIUS WHEELCHAIR RAMPS ONLY. USE 4" DEPTH FOR TANGENT (MID-BLOCK) LOCATIONS.

RHODE ISLAND DEPARTMENT OF TRANSPORTATION

REVISIONS		
NO.	BY	DATE
1	MLP	Oct. 2005
2	MLP	Jun. 2008
3	MLP	Sep. 2012

WHEELCHAIR RAMP

JUNE 15, 1998 (ISSUE DATE)

R.I. STANDARD 43.3.0

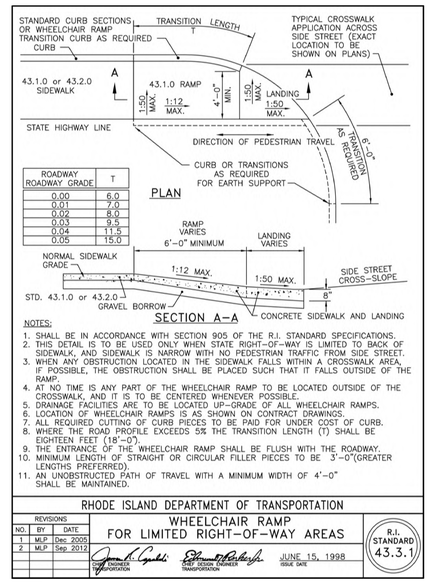

ROADWAY ROADWAY GRADE	T
0.00	6.0
0.01	7.0
0.02	8.0
0.03	9.5
0.04	11.5
0.05	15.0

NOTES:
1. SHALL BE IN ACCORDANCE WITH SECTION 905 OF THE R.I. STANDARD SPECIFICATIONS.
2. THIS DETAIL IS TO BE USED ONLY WHEN STATE RIGHT-OF-WAY IS LIMITED TO BACK OF SIDEWALK, AND SIDEWALK IS NARROW WITH NO PEDESTRIAN TRAFFIC FROM SIDE STREET.
3. WHEN ANY OBSTRUCTION LOCATED IN THE SIDEWALK FALLS WITHIN A CROSSWALK AREA, IF POSSIBLE, THE OBSTRUCTION SHALL BE PLACED SUCH THAT IT FALLS OUTSIDE OF THE RAMP.
4. AT NO TIME IS ANY PART OF THE WHEELCHAIR RAMP TO BE LOCATED OUTSIDE OF THE CROSSWALK AND IT IS TO BE CENTERED WHENEVER POSSIBLE.
5. DRAINAGE FACILITIES ARE TO BE LOCATED UP-GRADE OF ALL WHEELCHAIR RAMPS.
6. LOCATION OF WHEELCHAIR RAMPS IS AS SHOWN ON CONTRACT DRAWINGS.
7. ALL REQUIRED CUTTING OF CURB PIECES TO BE PAID FOR UNDER COST OF CURB.
8. WHERE THE ROAD PROFILE EXCEEDS 5% THE TRANSITION LENGTH (T) SHALL BE EIGHTEEN FEET (18'-0").
9. THE ENTRANCE OF THE WHEELCHAIR RAMP SHALL BE FLUSH WITH THE ROADWAY.
10. MINIMUM LENGTH OF STRAIGHT OR CIRCULAR FILLER PIECES TO BE 3'-0"(GREATER LENGTHS PREFERRED).
11. AN UNOBSTRUCTED PATH OF TRAVEL WITH A MINIMUM WIDTH OF 4'-0" SHALL BE MAINTAINED.

RHODE ISLAND DEPARTMENT OF TRANSPORTATION

REVISIONS		
NO.	BY	DATE
1	MLP	Dec 2005
2	MLP	Sep 2012

WHEELCHAIR RAMP FOR LIMITED RIGHT-OF-WAY AREAS

JUNE 15, 1998 (ISSUE DATE)

R.I. STANDARD 43.3.1

PAVEMENT STRIPING DETAIL
NOT TO SCALE

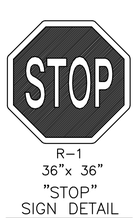

R-1
36"x 36"
"STOP"
SIGN DETAIL



R1-5
36"x 36"
"YIELD TO PEDESTRIANS"
SIGN DETAIL

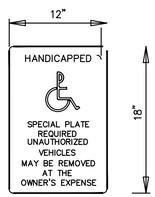

"R7-8, R7-8A"
SIGN DETAIL

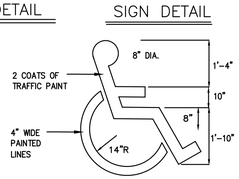

HANDICAP SYMBOL
NOT TO SCALE

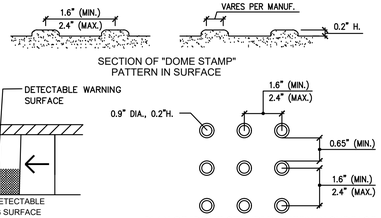

CURB RAMPS MUST HAVE A DETECTABLE WARNING FEATURE EXTENDING THE FULL WIDTH AND DEPTH OF THE RAMP (MID-WALK "IN-LINE" RAMPS ONLY NEED DETECTABLE WARNINGS AT WALK/PARKING TRANSITION). THE DETECTABLE SURFACE MUST CONSIST OF RAISED TRUNCATED DOMES WITH A BASE DIAMETER OF NOMINAL 0.9 INCHES MINIMUM AND 1.4 INCHES MAXIMUM, A TOP DIAMETER OF 50 PERCENT OF THE BASE DIAMETER MINIMUM TO 65 PERCENT OF THE BASE DIAMETER MAXIMUM, AND A HEIGHT OF 0.2 INCH.

TRUNCATED DOMES IN DETECTABLE WARNING SURFACE SHALL HAVE A CENTER-TO-CENTER SPACING OF 1.6 INCHES MINIMUM AND 2.4 INCHES MAXIMUM, AND A BASE-TO-BASE SPACING OF 0.65 INCHES MINIMUM, MEASURED BETWEEN THE MOST ADJACENT DOMES ON A SQUARE GRID.

DETECTABLE WARNING PANELS SHALL BE CAST IRON DETECTABLE WARNING SURFACE PLATES BY ADA SOLUTIONS, 323 ANDOVER STREET, SUITE 3, WILMINGTON, MA (OR APPROVED EQUAL), AND SHALL CONTRAST VISUALLY WITH ADJACENT WALKING SURFACES EITHER LIGHT-ON-DARK OR DARK-ON-LIGHT.

DETECTABLE WARNING SURFACE DETAIL
NOT TO SCALE

ARCHITECTS

Saccoccio & Associates, Inc.
1085 Park Avenue
Cranston, Rhode Island
02910
tel 401.942.7970
fax 401.942.7975

Consultant

GAROFALO
GAROFALO & ASSOCIATES, INC.
CIVIL & STRUCTURAL ENGINEERS\SURVEYORS
LAND PLANNERS\ENVIRONMENTAL SCIENTISTS
P.O. BOX 6145 PROVIDENCE, R.I. 02940
1-401-273-6000

Education Center & Pavilion

ROGER WILLIAMS PARK ZOO
1000 ELMWOOD AVENUE,
PROVIDENCE, RI 02907

Revision Schedule	
Revision Number	Revision Date

ISSUED FOR BID
AUGUST 19, 2024

SHEET TITLE
CONSTRUCTION DETAILS-1

DRAWN BY: KYY	JOB NUMBER: 7213-00
CHECKED BY: SSH	DATE: 08/19/2024

C-8.0

SHEET: 9 OF: 13

L:\7213-00 Roger Williams Park Zoo (Saccoccio) - Providence, RI\dwg\01-current\7213-00-DETAILS.dwg 08/16/2024 kyingyong 08:58

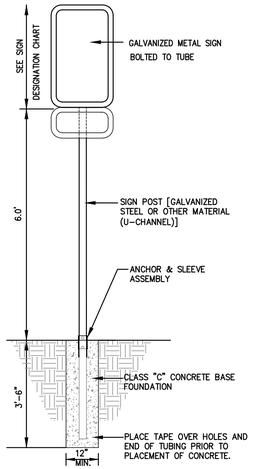

SIGNAGE DETAIL

NOT TO SCALE

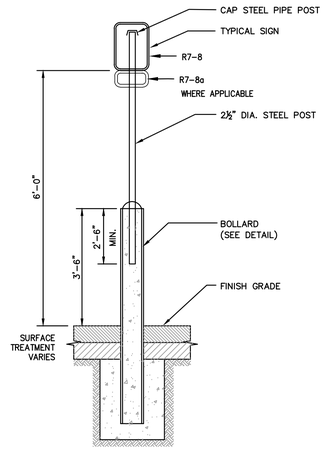

BOLLARD MOUNTED SIGN

NOT TO SCALE

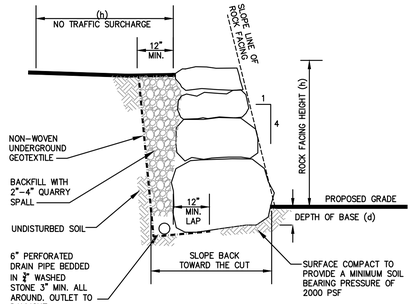

DIMENSIONAL TABLE

(h)	(d)	SIZE (BASE)	SIZE (TOP)
2 FEET	3 INCHES	2-MAN	1-MAN
4 FEET	6 INCHES	3-MAN	2-MAN
6 FEET	9 INCHES	4-MAN	2-MAN
8 FEET	12 INCHES	5-MAN	2-MAN

NOTES:

1. USE THE FOLLOWING TABLE WHEN REFERRING TO LARGER SIZE ROCKS AND BOULDERS.

ROCK SIZE	ROCK WEIGHT	AVG. DIMENSIONS
ONE MAN	50 – 200LBS	12" – 18"
TWO MAN	200 – 700LBS	18" – 28"
THREE MAN	700 – 2,000LBS	28" – 36"
FOUR MAN	2,000 – 4,000LBS	36" – 48"
FIVE MAN	4,000 – 6,000LBS	48" – 54"

2. FOR HEIGHTS LESS THAN OR EQUAL TO 3', PERFORATED DRAIN MAY BE ELIMINATED WHERE FREE DRAINING BACKFILL PROVIDES FOR WATER FLOW THROUGH WALL.

BOULDER WALL

NOT TO SCALE

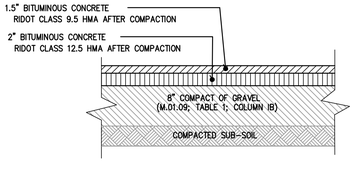

1. SUB-SOIL FILLS SHALL BE COMPRISED OF SELECT GRANULAR MATERIALS, CLASSIFIED AS SM OR MORE GRANULAR BY ASTM D 2487 AND PLACED IN 12-INCH MAXIMUM LIFTS AND SHALL BE COMPACTED TO 98% OF THE MAXIMUM STANDARD PROTECTOR DENSITY AS DETERMINED BY THE MOISTURE-DENSITY RELATIONSHIP TEST METHOD ASTM D689.
2. WITHIN SUBSOIL FILL AREAS, THE CONTRACTOR SHALL PROVIDE AT LEAST ONE COMPACTION TEST PER 100 LINEAR FEET, OR FRACTION THEREOF, OF EACH LIFT OF BACKFILL FOR ROADS. COMPACTION TESTING SHALL BE PERFORMED BY A RIDOT VALIDATED COMMERCIAL TESTING LABORATORY.

STANDARD DUTY BITUMINOUS CONCRETE PAVEMENT SECTION (BCP)

NOT TO SCALE

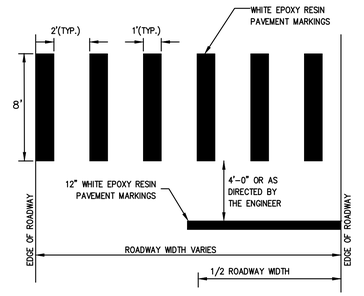

CROSSWALK AND STOP BAR DETAIL

NOT TO SCALE

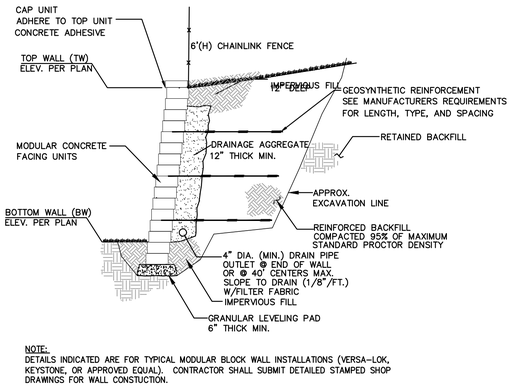

NOTE:
DETAILS INDICATED ARE FOR TYPICAL MODULAR BLOCK WALL INSTALLATIONS (VERSA-LOK, KEYSTONE, OR APPROVED EQUAL). CONTRACTOR SHALL SUBMIT DETAILED STAMPED SHOP DRAWINGS FOR WALL CONSTUCTION.

MODULAR BLOCK WALL DETAIL

NOT TO SCALE

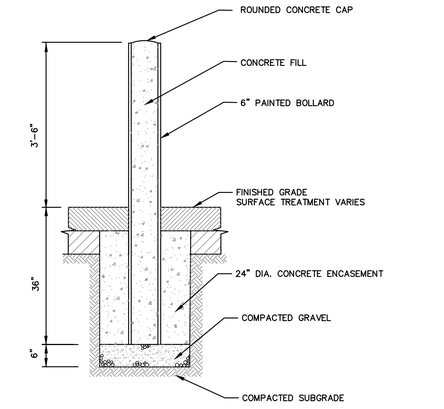

BOLLARD

NOT TO SCALE



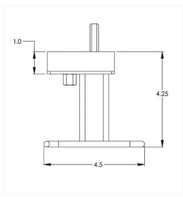

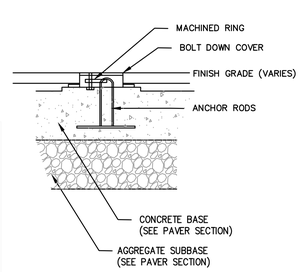

INSTALLATION

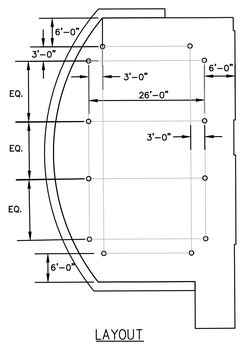

LAYOUT

NOTES:
1. TENT ANCHORS SHALL BE MODEL ANC204, AS MANUFACTURED BY ANCHOR MANUFACTURING, OR APPROVED EQUAL CAPABLE OF RESTRAINING 2000# LOAD.

TENT ANCHOR

NOT TO SCALE

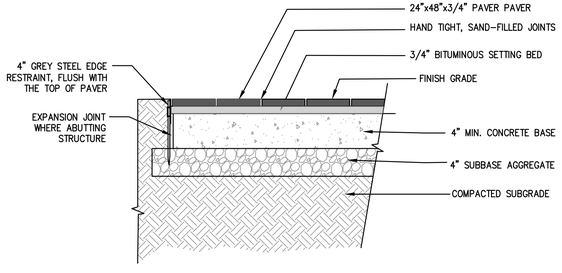

NOTES:
1. PORCELAIN PAVERS SHALL BE HANOVER ARCHITECTURAL PRODUCTS, 24"x48"x3/4" PORCELAIN PAVER-URBAN COLLECTION, COLOR: SANTA FE, OR APPROVED EQUAL.
2. PAVERS SHALL BE INSTALLED ACCORDING TO MANUFACTURERS SPECIFICATIONS.
3. INSTALL 2" WEEP HOLES IN CONCRETE BASE AT 48" O.C. AND FILL WITH STONE.
4. COORDINATE CONCRETE BASE INSTALLATION WITH TENT ANCHORS FOR CONCURRENT INSTALLATION.
5. PROTECT PAVER AREA AND AGGREGATES FROM CONSTRUCTION VEHICLE TRAFFIC.

PAVER SECTION

NOT TO SCALE

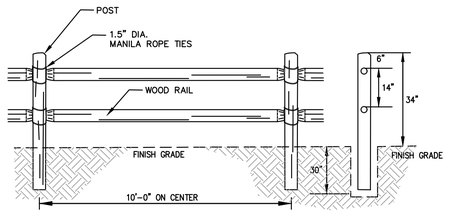

WOOD RAIL FENCE

NOT TO SCALE

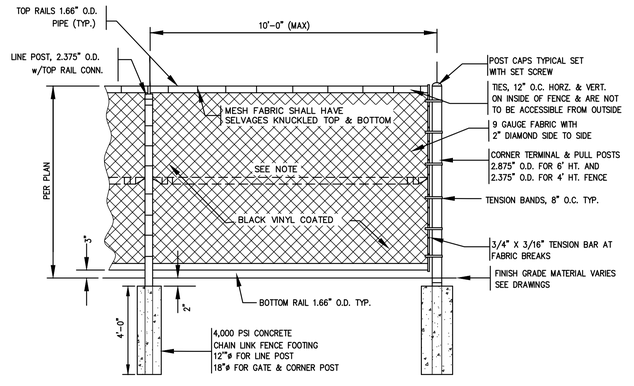

NOTE:
1. MID-RAIL TO BE INSTALLED ON ALL FENCES OVER 4'-0" HIGH.

CHAIN LINK FENCE

NOT TO SCALE

ARCHITECTS
Saccoccio & Associates, Inc.
1085 Park Avenue
Cranston, Rhode Island
02910
tel 401.942.7970
fax 401.942.7975
Consultant

GAROFALO
GAROFALO & ASSOCIATES, INC.
CIVIL & STRUCTURAL ENGINEERS\SURVEYORS
LAND PLANNERS\ENVIRONMENTAL SCIENTISTS
P.O. BOX 6145 PROVIDENCE, R.I. 02940
1-401-273-6000

Education Center & Pavilion

ROGER WILLIAMS PARK ZOO
1000 ELMWOOD AVENUE,
PROVIDENCE, RI 02907

Revision Schedule	
Revision Number	Revision Date

ISSUED FOR BID
AUGUST 19, 2024

SHEET TITLE
CONSTRUCTION DETAILS-2

DRAWN BY: KYY	JOB NUMBER: 7213-00
CHECKED BY: SSH	DATE: 08/19/2024

C-8.1

SHEET: 10 OF: 13

L:\7213-00 Roger Williams Park Zoo (Saccoccio) - Providence, RI\dwg\01-Current\7213-00-DETAILS.dwg 08/16/2024 kyingyang 08:59

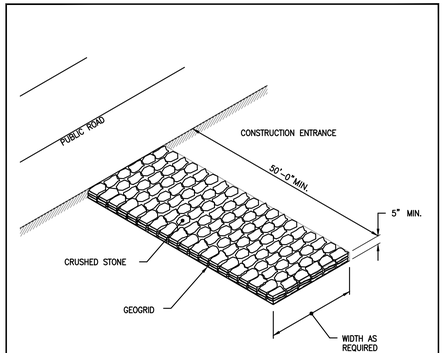

NOTE:
SHALL BE IN ACCORDANCE WITH SECTION 211 OF THE R.I. STANDARD SPECIFICATIONS.

RHODE ISLAND DEPARTMENT OF TRANSPORTATION

REVISIONS		
NO.	BY	DATE

CONSTRUCTION ACCESS

CHIEF ENGINEER TRANSPORTATION — CHIEF DESIGN ENGINEER TRANSPORTATION — JUNE 15, 1998 ISSUE DATE

R.I. STANDARD 9.9.0

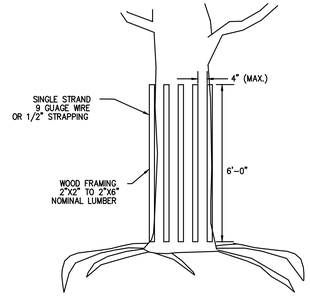

TREE PROTECTION DEVICE DETAIL

NOT TO SCALE

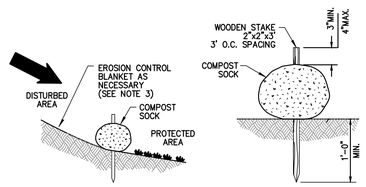

COMPOST SILT SOCK DETAIL

NOT TO SCALE

NOTES:
1. COMPOST SOCK SHALL BE INSTALLED PER MANUFACTURERS RECOMMENDATIONS. COMPOST SOCK SHALL BE A MINIMUM OF 8" IN DIAMETER.
2. COMPOST MATERIAL TO BE DISPERSED ON SITE, AS DETERMINED BY THE ENGINEER.
3. WHEN PLACING COMPOST SOCK ON SLOPES, USE EROSION CONTROL BLANKET IF SPECIFIED ON PLANS.
4. ALWAYS INSTALL COMPOST SOCK PERPENDICULAR TO SLOPE AND ALONG CONTOUR LINES.
5. REMOVE SEDIMENT FROM THE UP SLOPE SIDE OF THE COMPOST SOCK WHEN ACCUMULATION HAS REACHED 1/2 OF THE EFFECTIVE HEIGHT OF THE COMPOST SOCK.

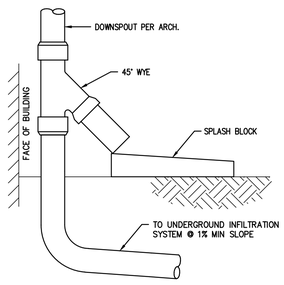

DOWNSPOUT CONNECTION WITH OVERFLOW

NOT TO SCALE

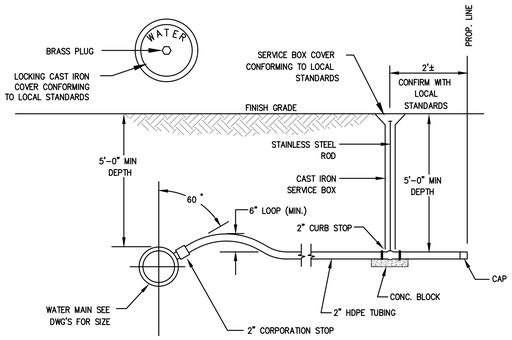

WATER SERVICE DETAIL

NOT TO SCALE

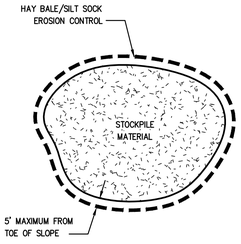

STOCKPILE DETAIL

NOT TO SCALE

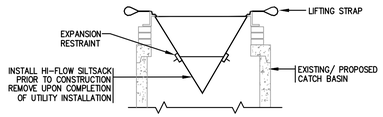

SILTSACK® AT CATCH BASIN DETAIL

NOT TO SCALE

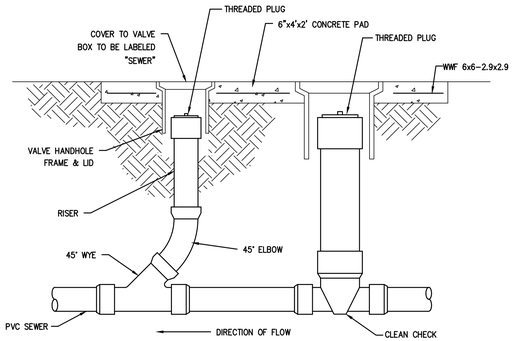

SEWER CLEANOUT W/ CHECK VALVE

NOT TO SCALE

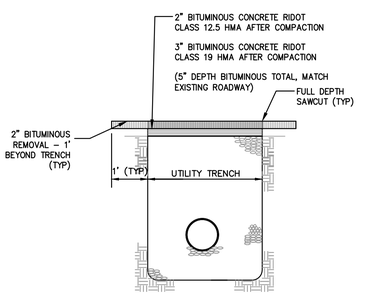

NOTE: FOLLOWING SETTLING OF PAVEMENT WITHIN THE UTILITY TRENCHES, THE CONTRACTOR SHALL REMOVE 2" BITUMINOUS ACROSS ENTIRE TRENCH WORK ZONE (AND 1' BEYOND TRENCHES) AND REPLACE WITH 2" BITUMINOUS CONCRETE, CLASS 12.5.

PAVEMENT RESURFACE

NOT TO SCALE

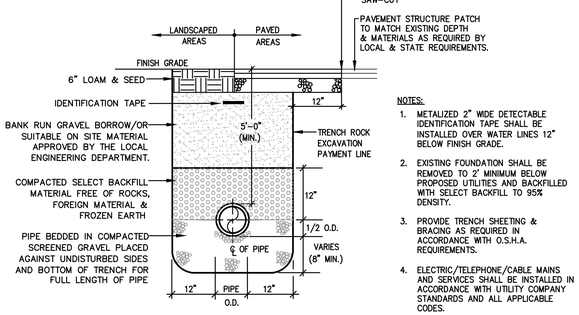

NOTES:
1. METALIZED 2" WIDE DETECTABLE IDENTIFICATION TAPE SHALL BE INSTALLED OVER WATER LINES 12" BELOW FINISH GRADE.
2. EXISTING FOUNDATION SHALL BE REMOVED TO 2' MINIMUM BELOW PROPOSED UTILITIES AND BACKFILLED WITH SELECT BACKFILL TO 95% DENSITY.
3. PROVIDE TRENCH SHEETING & BRACING AS REQUIRED IN ACCORDANCE WITH O.S.H.A. REQUIREMENTS.
4. ELECTRIC/TELEPHONE/CABLE MAINS AND SERVICES SHALL BE INSTALLED IN ACCORDANCE WITH UTILITY COMPANY STANDARDS AND ALL APPLICABLE CODES.

UTILTIY TRENCH SECTION

NOT TO SCALE

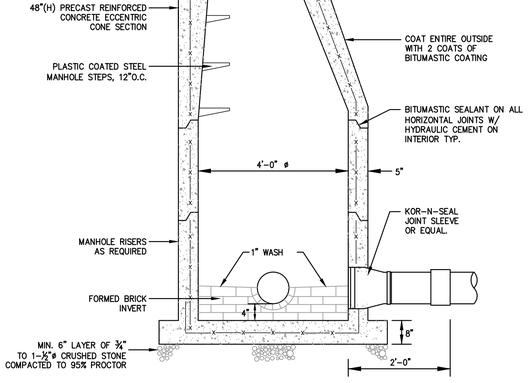

NOTE:
ALL LIFTING HOLES TO BE PLUGGED IN AND OUT WITH HYDRAULIC CEMENT.

SANITARY SEWER MANHOLE

NOT TO SCALE

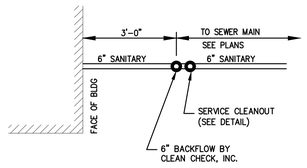

PLAN VIEW OF BACKFLOW/CLEANOUT

NOT TO SCALE

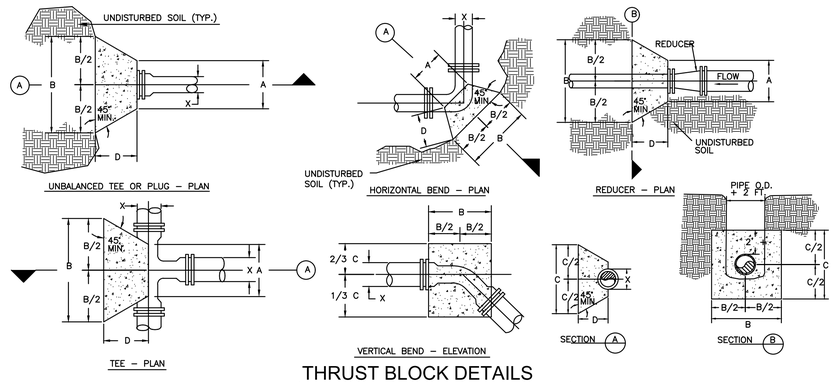

THRUST BLOCK DETAILS

NOT TO SCALE

Line Pressure = 150 PSI
Soil Pressure = 2000 PSF

Pipe Size X	A	B	C	D	VOL. CONC.
90 DEGREE BEND					
6"	0'-10"	1'-11"	1'-11"	1'-6"	4± CF
8"	0'-10"	2'-7"	2'-7"	1'-6"	7± CF
12"	0'-10"	3'-10"	3'-10"	1'-6"	14± CF
45 DEGREE BEND					
6"	0'-10"	1'-6"	1'-6"	1'-0"	2± CF
8"	0'-10"	1'-11"	1'-11"	1'-0"	3± CF
12"	0'-10"	2'-10"	2'-10"	1'-0"	5±CF

Line Pressure = 150 PSI
Soil Pressure = 2000 PSF

Pipe Size X	A	B	C	D	VOL. CONC.
22-1/2 DEGREE BEND					
6"	0'-10"	1'-0"	1'-0"	1'-0"	1± CF
8"	0'-10"	1'-4"	1'-4"	1'-0"	1.5± CF
12"	0'-10"	2'-0"	2'-0"	1'-0"	3± CF
11-1/4 DEGREE BEND					
6"	0'-10"	0'-10"	0'-10"	1'-0"	0.7± CF
8"	0'-10"	1'-0"	1'-0"	1'-0"	1± CF
12"	0'-10"	1'-6"	1'-6"	1'-0"	2±CF

Line Pressure = 150 PSI
Soil Pressure = 2000 PSF

Pipe Size X	A	B	C	D	VOL. CONC.
TEE & PLUG					
6"	0'-10"	1'-8"	1'-8"	1'-3"	3± CF
8"	0'-10"	2'-2"	2'-2"	1'-3"	4± CF
12"	0'-10"	3'-3"	3'-3"	1'-3"	8± CF

NOTES :
1. BLOCKING SHALL BE CLASS B(AE) CONCRETE. "SACRETE" WILL NOT BE ALLOWED.
2. 50lb FELT PAPER TO BE PLACED BETWEEN CONCRETE AND ALL PIPE SURFACES.

THRUST BLOCK DIMENSIONS

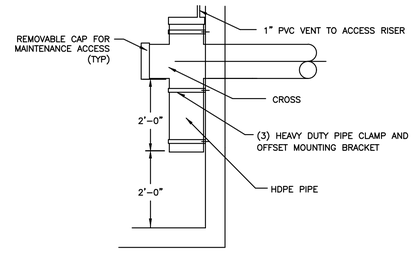

OIL/WATER SEPARATOR ELBOW

NOT TO SCALE

ARCHITECTS
Saccoccio & Associates, Inc.
1085 Park Avenue
Cranston, Rhode Island 02910
tel 401.942.7970
fax 401.942.7975
Consultant

GAROFALO
GAROFALO & ASSOCIATES, INC.
CIVIL & STRUCTURAL ENGINEERS\SURVEYORS
LAND PLANNERS\ENVIRONMENTAL SCIENTISTS
P.O. BOX 6145 PROVIDENCE, R.I. 02940
1-401-273-6000

Education Center & Pavilion

ROGER WILLIAMS PARK ZOO
1000 ELMWOOD AVENUE,
PROVIDENCE, RI 02907

Revision Schedule	
Revision Number	Revision Date

ISSUED FOR BID
AUGUST 19, 2024

SHEET TITLE
CONSTRUCTION DETAILS-3

DRAWN BY: KYY	JOB NUMBER: 7213-00
CHECKED BY: SSH	DATE: 08/19/2024

C-8.2

SHEET: 11 OF: 13

L:\7213-00 Roger Williams Park Zoo (Saccoccio) – Providence, RI\dwg\01-Current\7213-00-DETAILS.dwg 08/16/2024 kyingyong 08:59

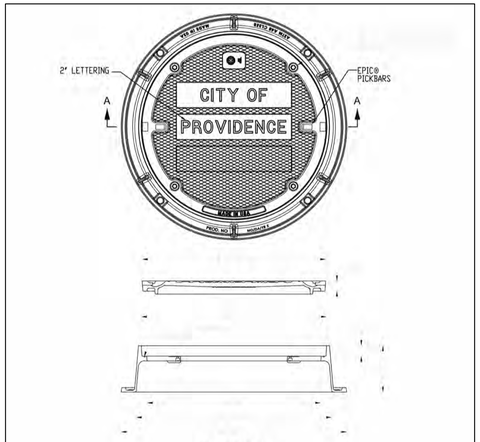

Notes:

1. Materials shall conform to Section M.04 of the Rhode Island Standard Specifications.
2. All materials shall be gray iron and shall be ASTM A48 certified.
3. Shall be EJ Product 200694W03 or approved equal.

HEAVY DUTY MANHOLE FRAME AND COVER-32 INCH

6.2.2 P PROVIDENCE STANDARD

ISSUE DATE: 1/6/17

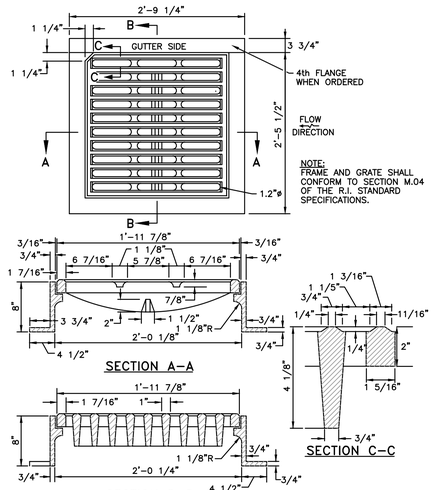

R.I. STANDARD 6.3.2

RHODE ISLAND DEPARTMENT OF TRANSPORTATION SQUARE FRAME AND GRATE (BICYCLE SAFE)

NOT TO SCALE

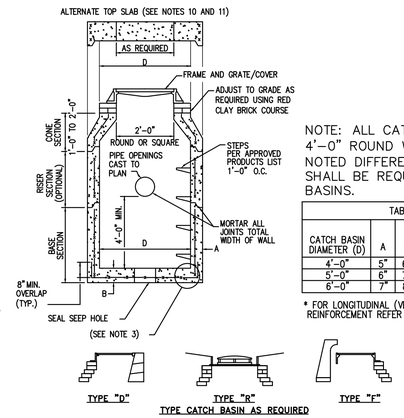

TYPE CATCH BASIN AS REQUIRED

NOTE: ALL CATCHBASINS SHALL BE 4'-0" ROUND W/ 4' SUMP UNLESS NOTED DIFFERENTLY. OIL/WATER SHALL BE REQUIRED ON ALL CATCH BASINS.

TABLE 1

CATCH BASIN DIAMETER (D)	A	B	CIRCUMFERENTIAL STEEL REINFORCEMENT REQUIRED
4'-0"	5"	6"	0.12 SQ. IN./LIN. FT.
5'-0"	6"	7"	0.15 SQ. IN./LIN. FT.
6'-0"	7"	8"	0.18 SQ. IN./LIN. FT.

* FOR LONGITUDINAL (VERTICAL STANDING) REINFORCEMENT REFER TO ASTM C478, ITEM 8.1.2

NOTES:

1. SHALL BE IN ACCORDANCE WITH SECTION 702 OF THE R.I. STANDARD SPECIFICATIONS.
2. SEE TABLE 1 FOR STEEL REINFORCEMENT REQUIREMENTS.
3. STEEL REINFORCEMENT FOR BASE SECTION BOTTOM SHALL BE A MINIMUM OF 0.12 SQ. IN./LIN. FT. (BOTH WAYS).
4. STEPS SHALL CONFORM TO STD. 5.3.0 AND SHALL BE INSTALLED AT THE CASTING PLANT.
5. ONE POUR MONOLITHIC BASE SECTION.
6. ANY NECESSARY ADJUSTMENTS DURING CONSTRUCTION WILL BE DONE BY SAW-CUTTING AND/OR CORING ONLY. NO JACKHAMMERS, HAMMERS AND CHISELS OR PNEUMATIC TOOLS WILL BE ALLOWED.
7. CORBEL MADE OF RED CLAY BRICK WILL BE PERMITTED FOR THE "CONE SECTION" OF THE 4'-0" CATCH BASIN ONLY.
8. FOR CATCH BASIN TYPES "D" AND "F" STEPS MUST BE INSTALLED ON THE CURB SIDE OF THE STRUCTURE.
9. THE CENTERLINE OF THE OPENING MUST BE WITHIN 2'-0" FROM THE STEPS.
10. ALTERNATE TOP SLAB IS STEEL REINFORCED TO MEET OR EXCEED H-25 LOADING (SEE STD. 4.7.2).
11. ALTERNATE TOP SLAB IS ONLY FOR USE WHEN REDUCING SECTION DOES NOT FIT BECAUSE OF STRUCTURE DEPTH.
12. REFER TO STD. 5.2.0 FOR MAXIMUM PIPE SIZES.

R.I. STANDARD 4.4.0

PRECAST 4'-0", 5'-0", OR 6'-0" ROUND CATCH BASIN

NOT TO SCALE

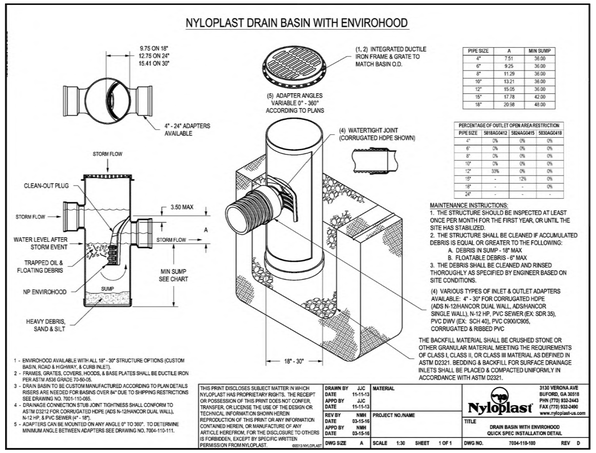

AREA DRAIN (AD)

NOT TO SCALE

1. CHAMBERS SHALL BE STORMTECH (SC-740 & SC-310, PER PLAN) OR APPROVED EQUAL.
2. CHAMBERS SHALL BE MADE FROM VIRGIN, IMPACT-MODIFIED POLYPROPYLENE COPOLYMERS.
3. CHAMBER ROWS SHALL PROVIDE CONTINUOUS, UNOBSTRUCTED INTERNAL SPACE WITH NO INTERNAL SUPPORT PANELS THAT WOULD IMPEDE FLOW OR LIMIT ACCESS FOR INSPECTION.
4. THE STRUCTURAL DESIGN OF THE CHAMBERS, THE STRUCTURAL BACKFILL AND THE INSTALLATION REQUIREMENTS SHALL ENSURE THAT THE LOAD FACTORS SPECIFIED IN THE AASHTO LRFD BRIDGE DESIGN SPECIFICATIONS, SECTION 12.12 ARE MET FOR: 1) LONG-DURATION DEAD LOADS AND 2) SHORT-DURATION LIVE LOADS, BASED ON THE AASHTO DESIGN TRUCK WITH CONSIDERATION FOR IMPACT AND MULTIPLE VEHICLE PRESENCES.
5. CHAMBERS SHALL CONFORM TO THE REQUIREMENTS OF ASTM F 2787, "STANDARD PRACTICE FOR STRUCTURAL DESIGN OF THERMOPLASTIC CORRUGATED WALL STORMWATER COLLECTION CHAMBERS".
7. ONLY CHAMBERS THAT ARE APPROVED BY THE ENGINEER WILL BE ALLOWED. THE CONTRACTOR SHALL SUBMIT (3 SETS) OF THE FOLLOWING TO THE ENGINEER FOR APPROVAL BEFORE DELIVERING CHAMBERS TO THE PROJECT SITE:
   a. A STRUCTURAL EVALUATION BY A REGISTERED STRUCTURAL ENGINEER THAT DEMONSTRATES THAT THE LOAD FACTORS SPECIFIED IN THE AASHTO LRFD BRIDGE DESIGN SPECIFICATIONS, SECTION 12.12 ARE MET.
   b. STRUCTURAL CROSS SECTION DETAIL ON WHICH THE STRUCTURAL CROSS SECTION IS BASED.
8. THE INSTALLATION OF CHAMBERS SHALL BE IN ACCORDANCE WITH THE MANUFACTURER'S LATEST INSTALLATION INSTRUCTIONS.

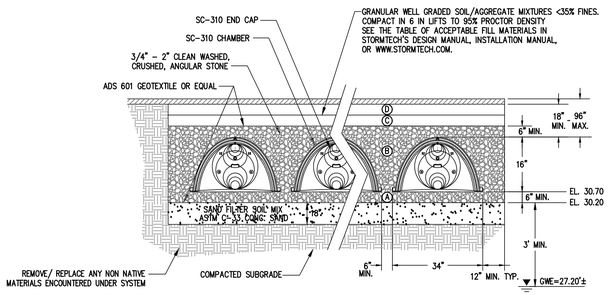

STORMTECH STORMWATER (BMP-1) SC-310 CHAMBER SYSTEM W/ 18" SAND LAYER

NOT TO SCALE

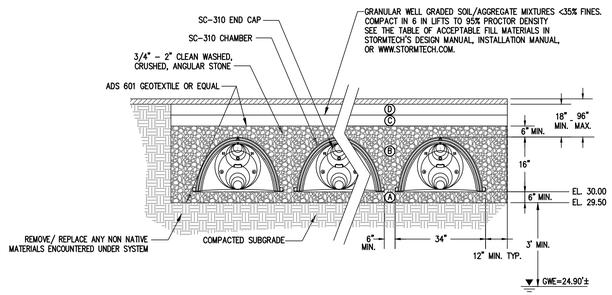

STORMTECH STORMWATER (BMP-2) SC-310 CHAMBER SYSTEM

NOT TO SCALE

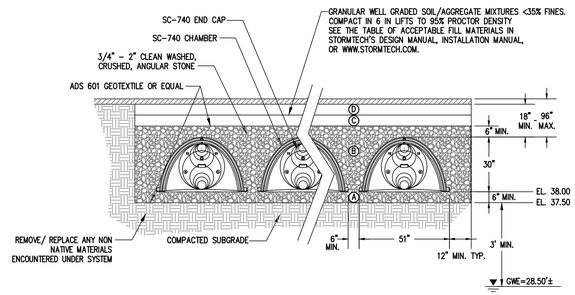

STORMTECH STORMWATER (BMP-3) SC-740 CHAMBER SYSTEM

NOT TO SCALE

ACCEPTABLE FILL MATERIALS: SC-740 CHAMBER SYSTEMS

MATERIAL LOCATION	DESCRIPTION	AASHTO M43 DESIGNATION	COMPACTION/DENSITY REQUIREMENT
(D) FILL MATERIAL FOR LAYER 'D' STARTS FROM THE TOP OF THE 'C' LAYER TO THE BOTTOM OF FLEXIBLE PAVEMENT OR UNPAVED FINISH GRADE ABOVE. NOTE THAT PAVEMENT SUBBASE MAY BE PART OF THIS LAYER	ANY SOIL/ROCK MATERIALS, NATIVE SOILS, OR PER ENGINEER'S PLANS. CHECK PLANS FOR PAVEMENT SUBGRADE REQUIREMENTS.	N/A	PREPARE PER ENGINEER'S PLANS. PAVED INSTALLATIONS MAY HAVE STRINGENT MATERIAL AND PREPARATION REQUIREMENTS.
(C) FILL MATERIAL FOR LAYER 'C' STARTS FROM THE TOP OF THE EMBEDMENT STONE ('B' LAYER) TO 18" [457 mm] ABOVE THE TOP OF THE CHAMBER. NOTE THAT PAVEMENT SUBBASE MAY BE A PART OF THIS LAYER.	GRANULAR WELL-GRADED SOIL/AGGREGATE MIXTURES, < 35% FINES. MOST PAVEMENT SUB-BASE MATERIALS CAN BE USED IN LIEU OF THIS LAYER.	3, 357, 4, 467, 5, 56, 57, 6, 67, 68, 7, 78, 8, 89, 9, 10	BEGIN COMPACTION AFTER 12" [305 mm] OF MATERIAL OVER THE CHAMBERS IS REACHED. COMPACT ADDITIONAL LAYERS IN 6" [152 mm] LIFTS TO A MIN. 95% STANDARD PROCTOR DENSITY. ROLLER GROSS VEHICLE WEIGHT NOT TO EXCEED 12,000 lbs [53 kN]. DYNAMIC FORCE NOT TO EXCEED 20,000 lbs [89 kN].
(B) EMBEDMENT STONE SURROUNDING THE CHAMBERS FROM THE FOUNDATION STONE ('A' LAYER) TO THE 'C' LAYER ABOVE.	CLEAN WASHED, CRUSHED, ANGULAR STONE, NOMINAL SIZE DISTRIBUTION BETWEEN 3/4 - 2 INCH [19 - 51 mm]	3, 357, 4, 467, 5, 56, 57	NO COMPACTION REQUIRED.
(A) FOUNDATION STONE BELOW CHAMBERS FROM THE SUBGRADE UP TO THE FOOT (BOTTOM) OF THE CHAMBER.	CLEAN WASHED, CRUSHED, ANGULAR STONE, NOMINAL SIZE DISTRIBUTION BETWEEN 3/4 - 2 INCH [19 - 51 mm]	3, 35, 4, 467, 5, 56, 57	PLATE COMPAGT OR ROLL TO ACHIEVE A 95% STANDARD PROCTOR DENSITY

PLEASE NOTE:

1. THE LISTED AASHTO DESIGNATIONS ARE FOR GRADATIONS ONLY. THE STONE MUST ALSO BE CLEAN WASHED, CRUSHED, ANGULAR. FOR EXAMPLE, A SPECIFICATION FOR #4 STONE WOULD STATE: "CLEAN WASHED, CRUSHED, ANGULAR NO. 4 (AASHTO M43) STONE".
2. AS AN ALTERNATE TO PROCTOR TESTING AND FIELD DENSITY MEASUREMENTS ON OPEN GRADED STONE, STORMTECH COMPACTION REQUIREMENTS ARE MET FOR 'A' LOCATION MATERIALS WHEN PLACED AND COMPACTED IN 9" [229 mm] (MAX) LIFTS USING TWO FULL COVERAGES WITH AN APPROPRIATE COMPACTOR.

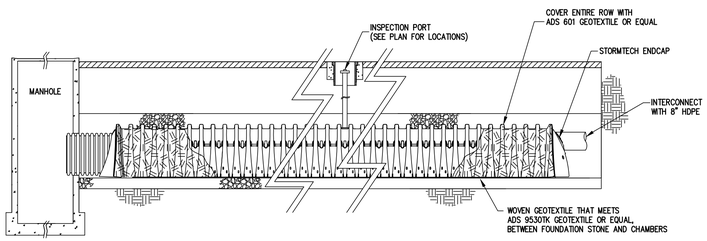

ISOLATOR CHAMBER ROW DETAIL

NOT TO SCALE

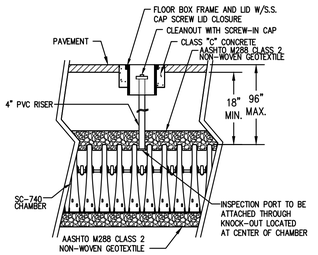

STORMTECH CHAMBER SYSTEM INSPECTION PORT DETAIL

NOT TO SCALE

SZ ARCHITECTS

Saccoccio & Associates, Inc.

1085 Park Avenue
Cranston, Rhode Island
02910

tel 401.942.7970
fax 401.942.7975

Consultant

GAROFALO

GAROFALO & ASSOCIATES, INC.
CIVIL & STRUCTURAL ENGINEERS\SURVEYORS
LAND PLANNERS\ENVIRONMENTAL SCIENTISTS
P.O. BOX 6145 PROVIDENCE, R.I. 02940
1-401-273-6000

Education Center & Pavilion

ROGER WILLIAMS PARK ZOO

1000 ELMWOOD AVENUE,
PROVIDENCE, RI 02907

Revision Schedule	
Revision Number	Revision Date

ISSUED FOR BID
AUGUST 19, 2024

SHEET TITLE

CONSTRUCTION DETAILS-4

DRAWN BY: KYY	JOB NUMBER: 7213-00
CHECKED BY: SSH	DATE: 08/19/2024

C-8.3

SHEET: 12 OF: 13

L:\7213-00 Roger Williams Park Zoo (Saccoccio) - Providence, RI\dwg\01-current\7213-00-DETAILS.dwg 08/16/2024 kyingyong 09:00

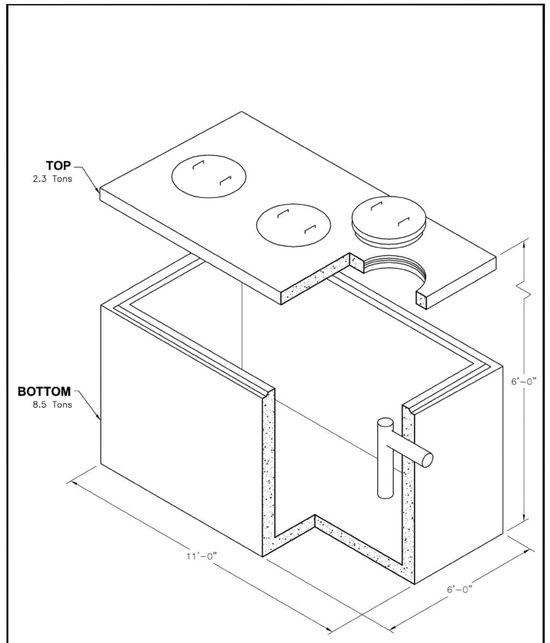

Oldcastle Precast®

CST-1500

FILE NAME: 324ESCCST1500_ISO.DWG
ISSUE DATE: January, 2008
www.oldcastleprecast.com

5'-0" x 10'-0" x 5'-0" I.D. Septic Tank 1,500 Gallon Capacity

Copyright ©2008 Oldcastle Precast

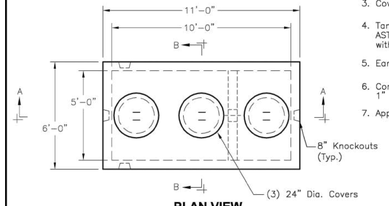

PLAN VIEW

GENERAL NOTES:

1. Concrete: 5,000 P.S.I Minimum Strength @ 28 Days
2. Steel Reinforcing–ASTM A–615, Grade 60
3. Cover to Steel–1" Minimum
4. Tanks are Designed to Meet ASTM C858 and ACI 318 with AASHTO HS–20 Loading
5. Earth Cover–0 to 5 Feet Max.
6. Construction Joint Sealed with 1" Dia. Butyl Rubber or Equivalent
7. Approx. Wts: Top Slab = 2.3 Tons Bottom Section = 8.5 Tons

PROJECT NOTES:

1. ALL GREASE TRAPS SHALL BE INSTALLED WITH 2–COMPARTMENT BAFFLE OPTION.
2. INLET/OUTLET TEES SHALL BE EXTENDED TO 12" FROM THE BOTTOM OF STRUCTURE.

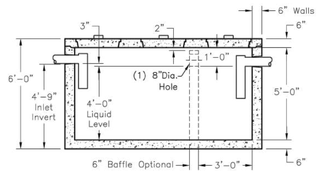

SECTION A-A

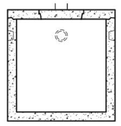

SECTION B-B

Oldcastle Precast®

CST-1500

FILE NAME: 324ESCCST1500_DET.DWG
ISSUE DATE: January, 2008
www.oldcastleprecast.com

5'-0" x 10'-0" x 5'-0" I.D. Septic Tank 1,500 Gallon Capacity

Copyright ©2008 Oldcastle Precast

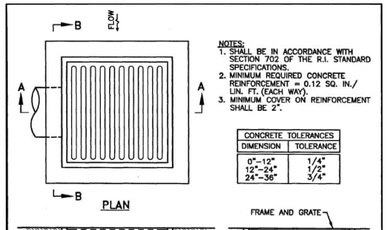

SECTION A–A SECTION B–B

RHODE ISLAND DEPARTMENT OF TRANSPORTATION

REVISIONS: NO. | BY | DATE

PRECAST CONCRETE DROP INLET

CHIEF ENGINEER TRANSPORTATION — CHIEF DESIGN ENGINEER TRANSPORTATION — JUNE 15, 1998 ISSUE DATE

R.I. STANDARD 4.5.0

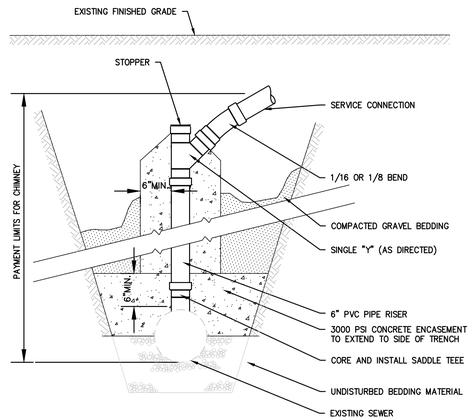

SEWER CHIMNEY

NOT TO SCALE

ARCHITECTS

Saccoccio & Associates, Inc.

1085 Park Avenue
Cranston, Rhode Island
02910

tel 401.942.7970
fax 401.942.7975

Consultant

GAROFALO

GAROFALO & ASSOCIATES, INC.
CIVIL & STRUCTURAL ENGINEERS\SURVEYORS
LAND PLANNERS\ENVIRONMENTAL SCIENTISTS
P.O. BOX 6145 PROVIDENCE, R.I. 02940
1-401-273-6000

Education Center & Pavilion

ROGER WILLIAMS PARK ZOO

1000 ELMWOOD AVENUE,
PROVIDENCE, RI 02907

Revision Schedule	
Revision Number	Revision Date

ISSUED FOR BID
AUGUST 19, 2024

SHEET TITLE

CONSTRUCTION DETAILS-5

DRAWN BY: KYY	JOB NUMBER: 7213-00
CHECKED BY: SSH	DATE: 08/19/2024

C-8.4

SHEET: 13 OF: 13

L:\7213-00 Roger Williams Park Zoo (Saccoccio) – Providence, RI\dwg\01-Current\7213-00-DETAILS.dwg 08/16/2024 kyingyong 09:00

9 A-L1.1 Playgrass
8 A-L1.1 Pre-K Activity #2 A, G, H
8 A-L1.2 Play Stack Climber
LOD
6' WIDE GATE
planting bed
8 A-L1.1 Pre-K Activity #2 F
Berm (1' contour invervals typical)
7 A-L1.1 EWF Mulch (typ.)
4 A-L1.1 Bench (no planter, typ.)
11 A-L1.1 Log Seat (7 req'd)
9 A-L1.1 Playgrass
6 A-L1.2 Labyrinth
6 A-L1.1 Raised Garden Bed (8 req'd)
2 A-L1.2 4 Rail Fence
3 A-L1.2 4 Rail Fence & Dig Barrier
Nautral Boulders (by RWPZ)
5 A-L1.2 Sensory Path
8 A-L1.1 Pre-K Activity #2 C, D
5 A-L1.2 Rubber Step Stone (5 req'd)
8 A-L1.1 Pre-K Activity #2 I
6 A-L1.1 Raised Garden Bed (typ.)
8 A-L1.1 Pre-K Activity #2 E
3 A-L1.1 Pre-K Activity #1 B
3 A-L1.1 Pre-K Activity #1 A
EWF this area 6" depth
1 A-L1.2 Decomposed Granite Path
10 A-L1.1 Log Stump Seat (provide 9)
8 A-L1.1 Pre-K Activity #2 B
8 A-L1.1 Pre-K Activity #2 J
1 A-L1.1 Steel Fountain w/ Planter
2 A-L1.1 Bench at Fountain
EWF this area 6" depth
planting bed
1 A-L1.3 Privacy Fence
NOT IN CONTRACT
FUTURE WORK
1 A-L1.2 Decomposed Granite Path
Animal enclosure fencing by Corners Limited 1.800.456.6780
Scored Concrete(see Civil drawings)
7 A-L1.2 Thermoplastic Logo
Entrance Columns (see Architectural drawings)
bench
planter
bench
8' WIDE GATE
Chain Link Fence (see Civil Dwgs.)
4 A-L1.1 Bench w/Planter
3 A-L1.3 Aluminum Fence
North
10 0 10 20
SCALE IN FEET

ARCHITECTS
Saccoccio & Associates, Inc.
1085 Park Avenue
Cranston, Rhode Island 02910
tel 401.942.7970
fax 401.942.7975
Consultant

Diane C. Soule & Associates, ASLA
Landscape Architecture
422 Farnum Pike
Smithfield, Rhode Island 02917
www.dianesouleandassociates.com
401.231.0736
email: diane@dcsa.ws

Education Center & Pavilion

ROGER WILLIAMS PARK ZOO
1000 ELMWOOD AVENUE,
PROVIDENCE, RI 02907

Revision Schedule	
Revision Number	Revision Date

ISSUED FOR CONSTRUCTION
AUGUST 19, 2024

SHEET TITLE

EDUCATION CENTER

MATERIALS & LAYOUT PLAN

DRAWN BY:	DCS	JOB NUMBER:	7213-00
CHECKED BY:	DCS	DATE:	08/19/2024

A-L1.0

SHEET: X OF: X

VERDI
www.verdiaustin.com
(512) 419.0883

SELECT DESIRED FINISH AND SIZE:
- ☐ RECTANGLE (SHOWN)
  - ☐ SMALL 36" L X 18" W X 24" H
  - ☐ LARGE 48" L x 24" W x 24" H
  - ☒ CUSTOM: 60"L x 24"W x 24"H
- ☐ SQUARE
  - ☐ SMALL 24" L X 24" W X 12" H
  - ☐ MEDIUM 36" L X36" W X18" H
  - ☐ LARGE 48" L X 48" W X 24" H

SELECT DESIRED MATERIAL
- ☒ STEEL
- ☐ ALUMINUM

SELECT DESIRED COLOR:
- ☐ NATURAL STEEL
- ☐ POWDER COATED BLACK
- ☒ POWDER COATED BRONZE
- ☐ CUSTOM:_____

ADDITIONAL FEATURE
- ☒ WATER FALL EDGE - 6" STEEL

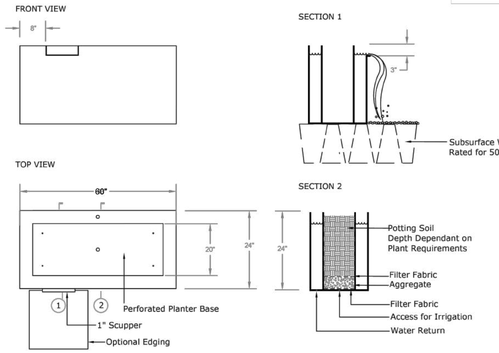

NOTES:
1. BASIN AND PUMP INSTALLATION TO BE COMPLETED IN ACCORDANCE WITH MANUFACTURER'S SPECIFICATIONS.
2. DO NOT SCALE DRAWING.
3. THIS DRAWING IS INTENDED FOR USE BY ARCHITECTS, ENGINEERS, CONTRACTORS, CONSULTANTS AND DESIGN PROFESSIONALS FOR PLANNING PURPOSES ONLY. THIS DRAWING MAY NOT BE USED FOR CONSTRUCTION.
4. ALL INFORMATION CONTAINED HEREIN WAS CURRENT AT THE TIME OF DEVELOPMENT BUT MUST BE REVIEWED AND APPROVED BY THE PRODUCT MANUFACTURER TO BE CONSIDERED ACCURATE.

1 STEEL FOUNTAIN WITH PLANTER
NO SCALE

2 BENCH AT FOUNTAIN
NO SCALE



A-KIDNICK PICNIC TABLE



B-BALANCE BEAM

SUPPLIER:
CedarWorks
www.cedarworks.com
(800) 733-6711
(207) 593-0527
or approved substitute

3 PRE-K ACTIVITY #1
NO SCALE



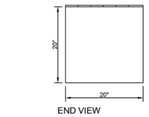

END VIEW

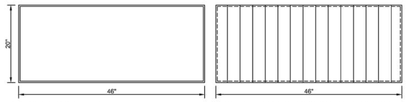

PLAN VIEW-PLANTER | PLAN VIEW-PLANTER W / ALUMINUM SEAT



ELEVATION-PLANTER | ELEVATION-PLANTER W / ALUMINUM SEAT

Planters are shaped from metal by skilled craftsmen utilizing precise folding of the metal to create a planter that uses no welding during the manufacturing process and assembles into a rectangular shape from five panels. Planter panels interlock together to form incredibly solid plant container that can accommodate large plants. Most of all, the planter is simple, modern and minimalistic. Aluminum planters are powder coated to provide a vibrant durable finish. Corten Steel planters do not ship pre-weathered and will arrive with the bare steel finish which will have to weather over time.

The removable bench top provides functional sitting. Also, the unit can be used as storage for garden tools and accessories. Durable polystyrene and aluminum bench top construction requires no maintenance. The bench top comes in a grey color with finely sanded texture.

WWW.NICEPLANTER.COM
Nice Planter LLC
Rancho Cucamonga, CA
P: 206.486.0936
E: info@niceplanter.com

4 BENCH
NO SCALE



18 in. x 18 in. Earth Cracked Log Rubber Step Stone

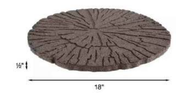

18"W x 18"D x 1½"H

SUPPLIER:
THE HOME DEPOT
WWW.HOMEDEPOT.COM
or approved substitute

5 RUBBER STEP STONE
NO SCALE



SUPPLIER:
GARDENER'S SUPPLY COMPANY
WWW.GARDENERS.COM
or approved substitute

3'X6' COPPER CAP CEDAR BED

6 RAISED GARDEN BED
NO SCALE

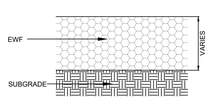

NOTE: DEPTH OF EWF IN OUTDOOR ACTIVITY YARD IS 12" AFTER COMPACTION. DEPTH OF EWF IN PRE-K YARD IS 4" AFTER COMPACTION.

EWF (Engineered Wood Fiber Playground Surfacing) must meet the following requirements:

1. Composition: Engineered wood fiber. No chemical treatments or additives.
2. Compliance: Meet or exceed CPSC guidelines for impact attenuation.
3. Recycled Content: 100 percent pre-consumer recovered materials.
4. Dimensions: Per sieve analysis, ASTM F2075 / 4.4
5. Hazardous Metal, ASTM F 2075 / 4.5
6. Tramp Metal, ASTM F 2075 / 4.6
7. Coefficient of Permeability, ASTM D 2434: Greater than 0.6 cm/s.
8. When bonded: Permeability per falling head test, EM1110-2-1906-VII-13: 191.19 gal/min/sq.ft.
9. Moisture Absorption: Maximum of 150 percent by weight.
10. Moisture Content: 25 to 60 percent by weight.
11. Density: 15 to 24 pounds per cubic foot.
12. Impact Attenuation: ASTM F 1292.
13. IPEMA Certification: 8 inch thickness rated to 8 feet and 12 inch thickness to 12 feet.

7 EWF MULCH
3/4" = 1'-0"



A-FORT BUILDING ACTIVITY CENTER



B-WATER WORKS CENTER



C-OUTLAST BRIDGE



D-RAMP



E-ART CENTER



F-WILLOW HUT



G-FORT BUILDING MATERIAL STORAGE



H-FORT BUILDING MATERIALS



I-GARDEN ACTIVITY CENTER



J-MUD KITCHEN

SUPPLIER:
LOUISE KOOL & GALT
WWW.LOUISEKOOL.COM
1.800.268.4011
or approved substitute

8 PRE-K ACTIVITY #2
NO SCALE

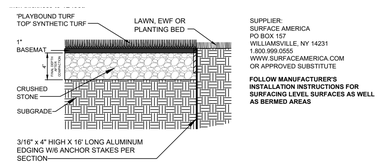

SUPPLIER:
SURFACE AMERICA
PO BOX 157
WILLIAMSVILLE, NY 14231
1.800.999.0555
WWW.SURFACEAMERICA.COM
OR APPROVED SUBSTITUTE

FOLLOW MANUFACTURER'S INSTALLATION INSTRUCTIONS FOR SURFACING LEVEL SURFACES AS WELL AS BERMED AREAS

9 PLAYGRASS
3/4" = 1'-0"

NOTE: SOURCE LOG SEATS FROM ON SITE HARDWOOD TREES

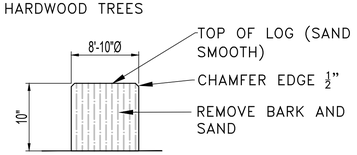

10 LOG STUMP SEAT
3/4" = 1'-0"

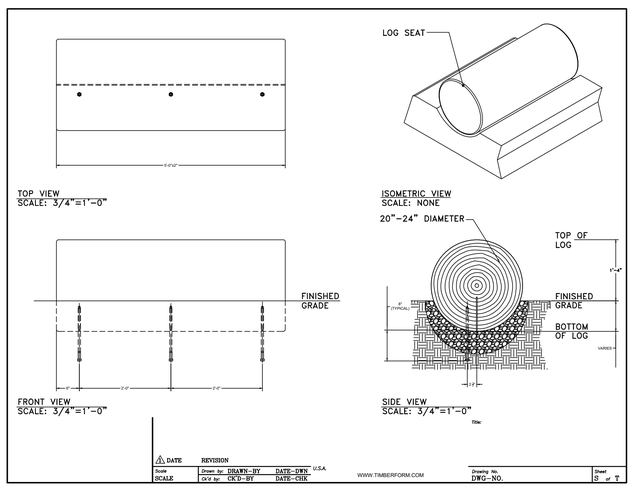

11 LOG SEAT
NO SCALE

ARCHITECTS
Saccoccio & Associates, Inc.
1085 Park Avenue
Cranston, Rhode Island
02910
tel 401.942.7970
fax 401.942.7975
Consultant

Diane C. Soule & Associates, ASLA
Landscape Architecture
422 Farnum Pike
Smithfield, Rhode Island 02917
www.dianesouleandassociates.com
401.231.0736
email: diane@dcsa.ws

Education Center & Pavilion

ROGER WILLIAMS PARK ZOO
1000 ELMWOOD AVENUE,
PROVIDENCE, RI 02907

Revision Schedule	
Revision Number	Revision Date

ISSUED FOR CONSTRUCTION
AUGUST 19, 2024

SHEET TITLE

EDUCATION CENTER

DETAILS

DRAWN BY:	DCS	JOB NUMBER:	7213-00
CHECKED BY:	DCS	DATE:	08/19/2024

A-L1.1

SHEET: X OF: X

NOTES:
1.BLACK POWDER-COAT FINISH
2. MANUFACTURED BY THE J.D. RUSSELL COMPANY 'DURAEDGE STEEL LANDSCAPE EDGING'
1.800.888.7425 OR APPROVED SUBSTITUTE

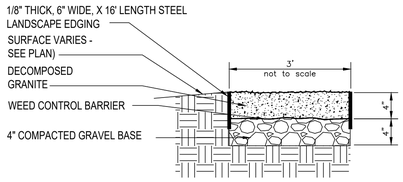

1 DECOMPOSED GRANITE PATH
NO SCALE

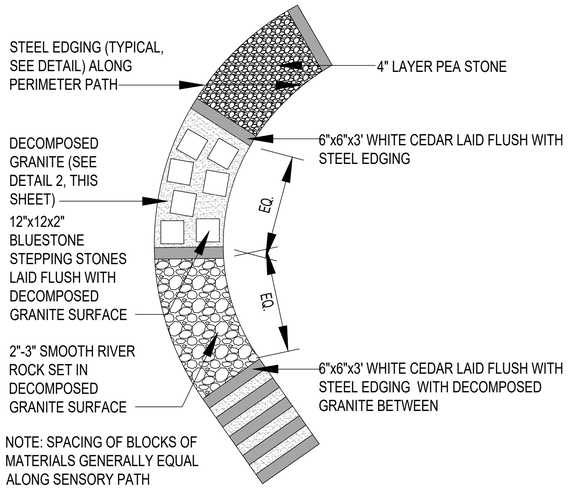

NOTE: SPACING OF BLOCKS OF MATERIALS GENERALLY EQUAL ALONG SENSORY PATH

5 SENSORY PATH
NO SCALE

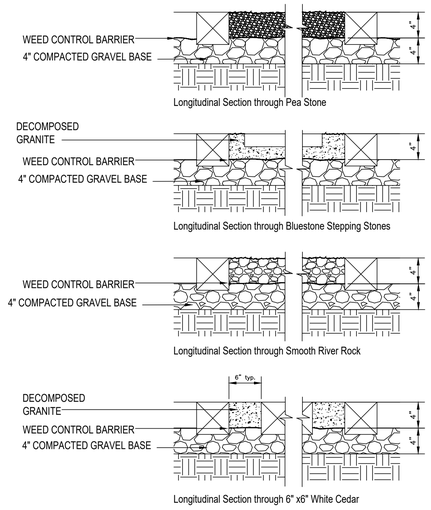

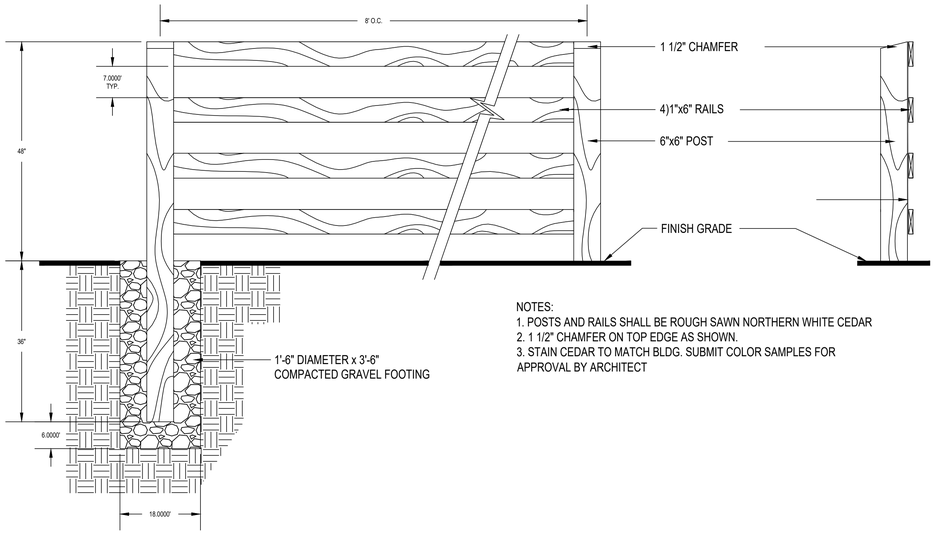

NOTES:
1. POSTS AND RAILS SHALL BE ROUGH SAWN NORTHERN WHITE CEDAR
2. 1 1/2" CHAMFER ON TOP EDGE AS SHOWN.
3. STAIN CEDAR TO MATCH BLDG. SUBMIT COLOR SAMPLES FOR APPROVAL BY ARCHITECT

2 4 RAIL FENCE
3/4" =1'-0"

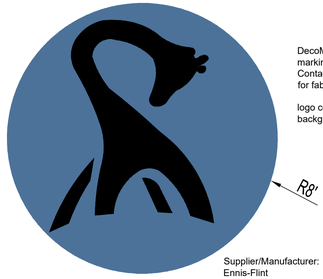

DecoMark thermoplastic pavement marking
Contact Robert Pea 207.333.0822 for fabrication

logo color: sky blue
background color: white

Supplier/Manufacturer:
Ennis-Flint
1.800.331.8118
www.enisflint.com

7 THERMOPLASTIC LOGO
NO SCALE



Avalon a' la Chartres™ Paver Labyrinth Kit ©1998, 2022 by The Labyrinth Company. All Rights Reserved.

The Labyrinth Company
110 N. Markley St. #208
Greenville SC 29601
1-888-715-2297
203-832-3815
Info@LabyrinthCompany.com

6 LABYRINTH
NO SCALE

NOTE: SEE DETAIL ABOVE FOR FENCE DIMENSIONS

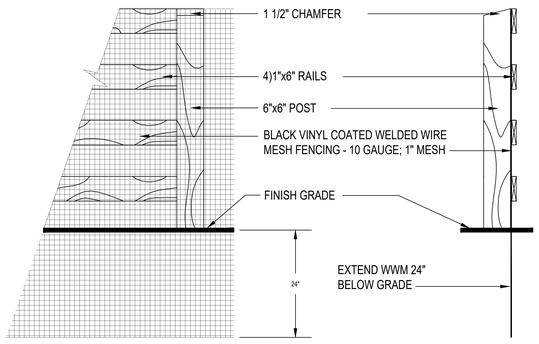

FENCE DETAIL

NOTE: SEE 4 RAIL FENCE DETAIL FOR FENCE FOOTING

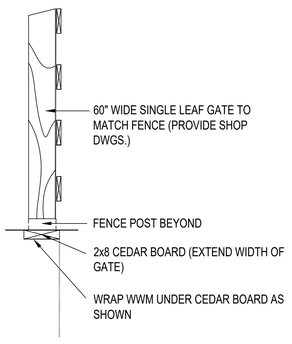

GATE DETAIL

3 4 RAIL FENCE & DIG BARRIER
3/4" =1'-0"

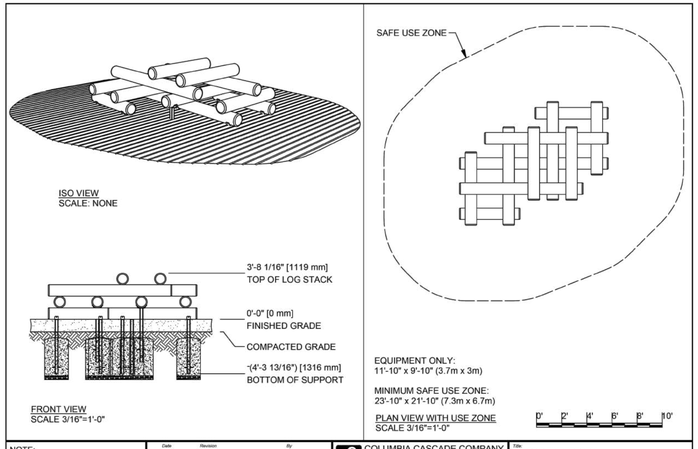

NOTE:
CONCRETE FOOTING AND NO. 4 REBAR (BY OTHERS) PER LOCAL SOIL CONDITIONS. CONSULT PROJECT ENGINEER FOR EXACT REQUIREMENTS.

Date	Revision	By

Scale: NOTED
Drawn by: DGR 03-30-18
Qa'd by: CL 03-30-18

COLUMBIA CASCADE COMPANY
Makers of TimberForm®, PipeLine®, ReRley®
1300 S.W. Sixth Avenue, Suite 310
Portland, Oregon 97201-3494
U.S.A.
Telephone 503/223-1157
Facsimile 503/223-4530
This drawing reveals the copyrighted intellectual property of Columbia Cascade Company. Not for use by others without our express, written authorization.
WWW.TIMBERFORM.COM

Title: CLASSIC TIMBERFORM MODEL NO. 4500-401 PLAY STACK
Drawing No.: W-4500-401
Sheet: 1 of 1

8 PLAY STACK CLIMBER
NO SCALE

ARCHITECTS

Saccoccio & Associates, Inc.
1085 Park Avenue
Cranston, Rhode Island 02910
tel 401.942.7970
fax 401.942.7975

Consultant

Diane C. Soule & Associates, ASLA
Landscape Architecture
422 Farnum Pike
Smithfield, Rhode Island 02917
www.dianesouleandassociates.com
401.231.0736
email: diane@dcsa.ws

Education Center & Pavilion

ROGER WILLIAMS PARK ZOO
1000 ELMWOOD AVENUE,
PROVIDENCE, RI 02907

Revision Schedule	
Revision Number	Revision Date

ISSUED FOR CONSTRUCTION
AUGUST 19, 2024

SHEET TITLE

EDUCATION CENTER

DETAILS

DRAWN BY:	DCS	JOB NUMBER:	7213-00
CHECKED BY:	DCS	DATE:	08/19/2024

A-L1.2

SHEET: X OF: X

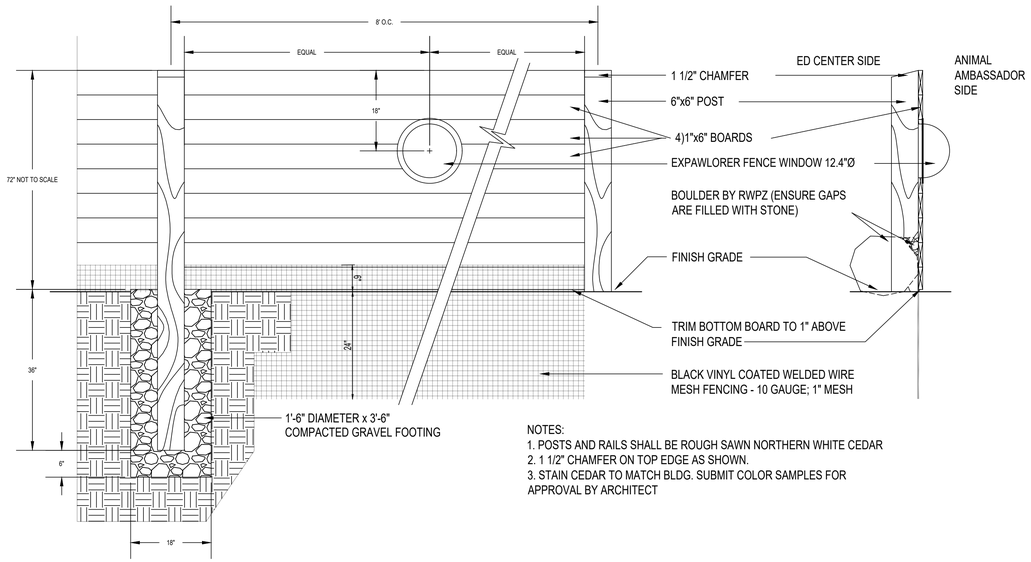

NOTES:
1. POSTS AND RAILS SHALL BE ROUGH SAWN NORTHERN WHITE CEDAR
2. 1 1/2" CHAMFER ON TOP EDGE AS SHOWN.
3. STAIN CEDAR TO MATCH BLDG. SUBMIT COLOR SAMPLES FOR APPROVAL BY ARCHITECT

1 PRIVACY FENCE
3/4" =1'-0"

2 BED EDGE
NO SCALE

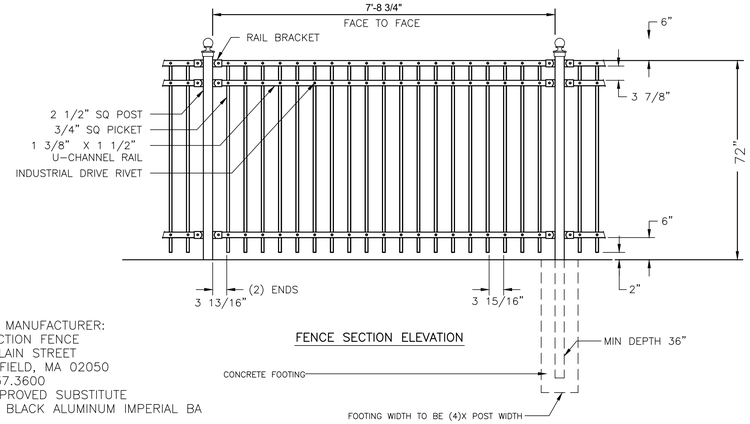

FENCE MANUFACTURER:
PERFECTION FENCE
635 PLAIN STREET
MARSHFIELD, MA 02050
781.837.3600
OR APPROVED SUBSTITUTE
STYLE: BLACK ALUMINUM IMPERIAL BA

FENCE SECTION ELEVATION

NOTE:
CONTACT FENCE MANUFACTURER FOR INSTALLATION DETAILS. PROVIDE GATES AS SHOWN ON PLAN TO MATCH FENCE. SUBMIT SHOP DRAWINGS FOR APPROVAL.

3 ALUMINUM FENCE
NO SCALE

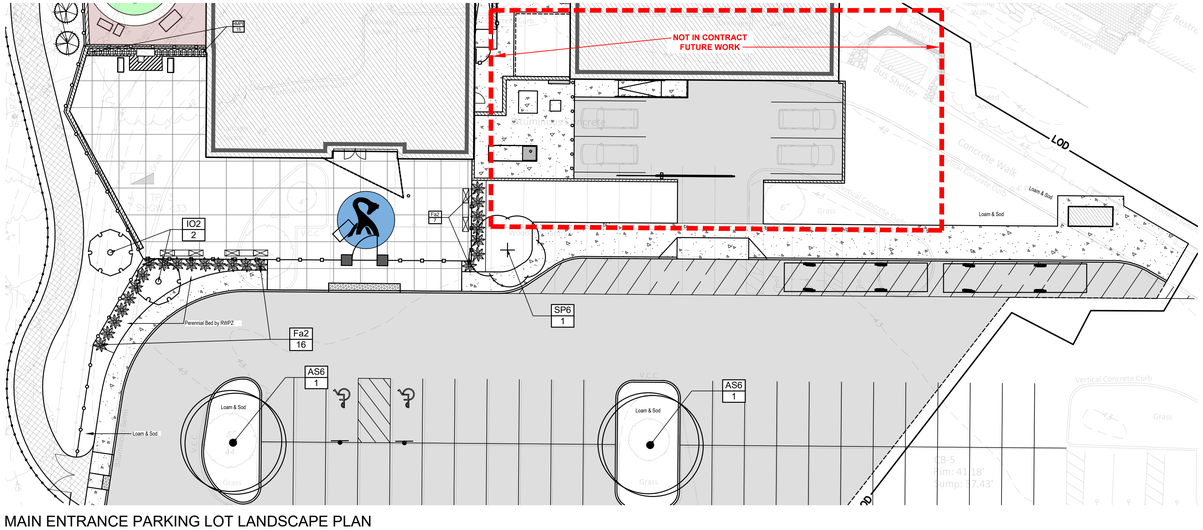

MAIN ENTRANCE PARKING LOT LANDSCAPE PLAN
1"=20'

ARCHITECTS
Saccoccio & Associates, Inc.
1085 Park Avenue
Cranston, Rhode Island 02910
tel 401.942.7970
fax 401.942.7975

Consultant

Diane C. Soule & Associates, ASLA
Landscape Architecture
422 Farnum Pike
Smithfield, Rhode Island 02917
www.dianesouleandassociates.com
401.231.0736
email: diane@dcsa.ws

Education Center & Pavilion

ROGER WILLIAMS PARK ZOO
1000 ELMWOOD AVENUE,
PROVIDENCE, RI 02907

Revision Schedule	
Revision Number	Revision Date

ISSUED FOR CONSTRUCTION
AUGUST 19, 2024

SHEET TITLE
EDUCATION CENTER

DETAILS

DRAWN BY:	DCS	JOB NUMBER:	7213-00
CHECKED BY:	DCS	DATE:	08/19/2024

A-L1.3

SHEET: X OF: X

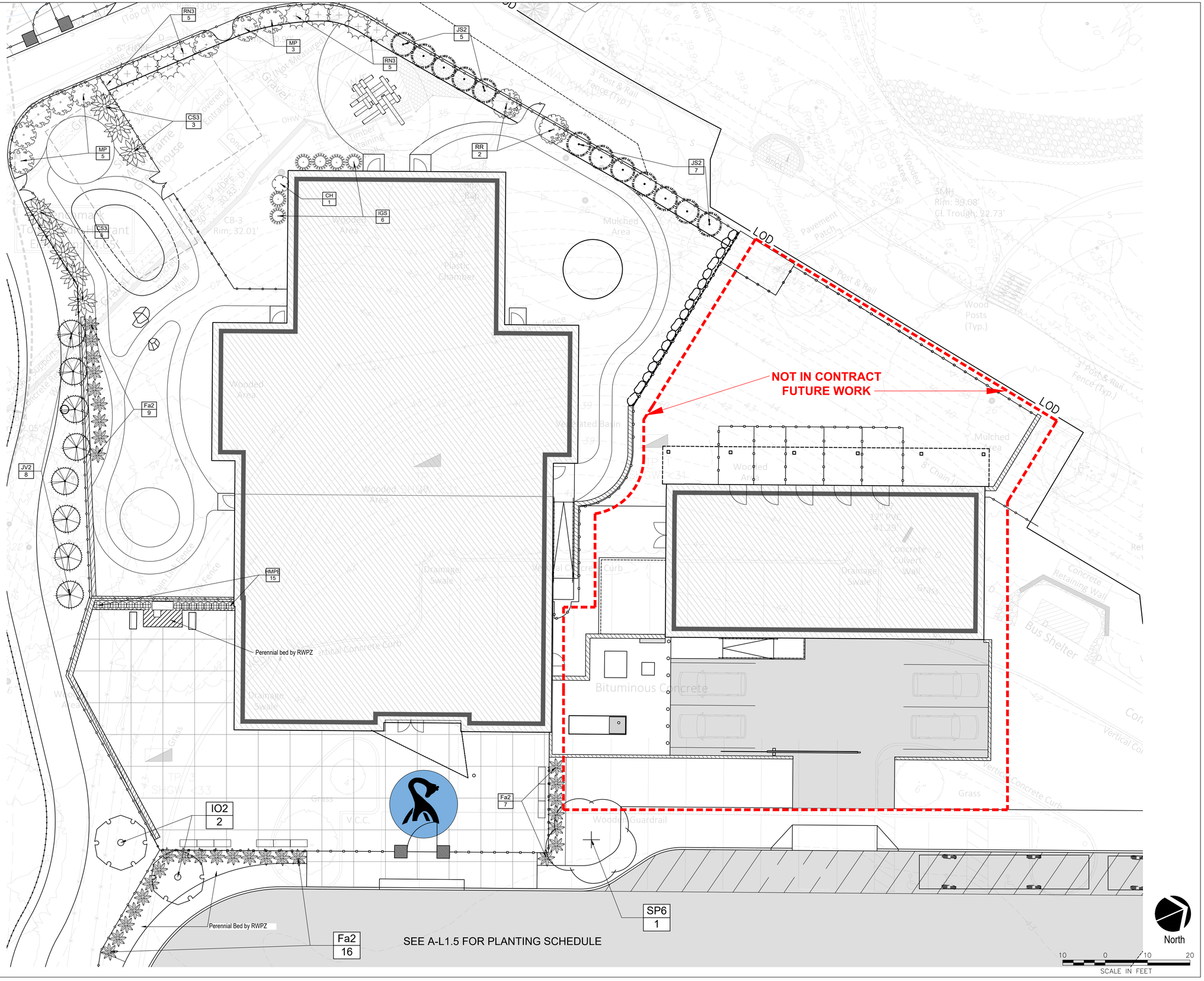

ARCHITECTS

Saccoccio & Associates, Inc.

1085 Park Avenue
Cranston, Rhode Island
02910

tel 401.942.7970
fax 401.942.7975

Consultant

Diane C. Soule & Associates, ASLA
Landscape Architecture

422 Farnum Pike
Smithfield, Rhode Island 02917
www.dianesouleandassociates.com

401.231.0736
email: diane@dcsa.ws

Education Center & Pavilion

ROGER WILLIAMS PARK ZOO

1000 ELMWOOD AVENUE,
PROVIDENCE, RI 02907

Revision Schedule	
Revision Number	Revision Date

ISSUED FOR CONSTRUCTION
AUGUST 19, 2024

SHEET TITLE

EDUCATION CENTER

LANDSCAPE PLAN

DRAWN BY:	DCS	JOB NUMBER:	7213-00
CHECKED BY:	DCS	DATE:	08/19/2024

A-L1.4

SHEET: X OF: X

PLANT SCHEDULE - PROJECT WIDE

SYMBOL	CODE	QTY	BOTANICAL / COMMON NAME	SIZE	CONTAINER
DECIDUOUS TREES					
	AS6	2	Acer saccharum `Green Mountain` TM / Green Mountain Sugar Maple	B & B	2"Cal
EVERGREEN TREES					
	IO2	8	Ilex opaca / American Holly	B & B	
	JS2	12	Juniperus chinensis `Spartan` / Spartan Juniper	B & B;	
	JVB	4	Juniperus virginiana / Eastern Red Cedar	B & B	
	JV2	8	Juniperus virginiana / Eastern Red Cedar	B & B	
FLOWERING TREES					
	Pc14	4	Prunus virginiana / Chokecherry	B&B; 5`-6` HT.	
	SP6	1	Stewartia pseudocamellia / Japanese Stewartia	B & B	2.5"Cal
SHRUBS					
	CH	1	Clethra alnifolia `Hummingbird` / Summersweet	CONT	5 gal
	CS3	8	Clethra alnifolia `Ruby Spice` / Ruby Spice Clethra	36"-42"; B&B	
	Fa2	32	Forsythia x 'Showoff Scarlet' / Arnold's Dwarf Forsythia	CONT	5 gal
	HMPE	15	Hydrangea macrophylla `Pink Elf` / Pink Elf Hydrangea	5 gal	
	IG2	14	Ilex glabra / Inkberry Holly	3`-4`; B&B	
	IGS	6	Ilex glabra `Shamrock` / Inkberry	CONT	5 gal
	KL1	8	Kalmia latifolia / Mountain Laurel	B&B; 3`-4` HT.	
	MP	8	Myrica pensylvanica / Northern Bayberry	3`-4`; B&B	
	RN3	10	Rhododendron catawbiense `Nova Zembla` / Catawba Rhododendron	4` - 5`; B&B	
	RR	17	Rhododendron catawbiense `Roseum Elegans` / Catawba Rhododendron	3 `- 4`; B&B	

LANDSCAPE NOTES:

1. GUARANTEE THAT, UPON COMPLETION AND FINAL ACCEPTANCE, LANDSCAPE PLANTINGS CONFORM TO REQUIREMENTS OF CONTRACT DOCUMENTS. PROVIDE A WARRANTY FOR TREE PLANTINGS FOR A MINIMUM OF TWO (2) YEARS, INCLUDING TWO (2) CONTINUOUS GROWING SEASONS. COMMENCE WARRANTY ON DATE IDENTIFIED IN THE 'CERTIFICATE OF FINAL COMPLETION'.

2. REPLACEMENTS: PLANTS OF SAME SIZE AND SPECIES AS SPECIFIED, PLANTED IN THE NEXT GROWING SEASON, WITH NEW WARRANTY AND EXTENDED MAINTENANCE SERVICE COMMENCING ON THE DATE OF REPLACEMENT.

3. PLANT MATERIALS SHALL BE OF SIZE AND CALIPER REQUIRED AND CONFORM TO THE REQUIREMENTS DESCRIBED IN THE LATEST EDITION OF AMERICAN STANDARD FOR NURSERY STOCK, PUBLISHED BY THE AMERICAN ASSOCIATION OF NURSERYMEN.

4. PLANTS OF OTHER KINDS THAN THOSE NAMED IN THE PLANT SCHEDULE SHALL NOT BE ACCEPTED WITHOUT APPROVAL. REPLACEMENT PLANTS LARGER IN SIZE THAN EXISTING MAY BE USED IF APPROVED BY THE A/E, PROVIDED USE OF LARGER PLANTS DOES NOT INCREASE CONTRACT PRICE.

5. A PROFESSIONAL HORTICULTURIST/NURSERYMAN SHALL BE CONSULTED TO DETERMINE THE PROPER TIME TO MOVE AND INSTALL PLANT MATERIAL SO THAT STRESS TO THE PLANT IS MINIMIZED. PLANTING OF DECIDUOUS MATERIAL MAY BE CONTINUED DURING WINTER MONTHS PROVIDED THERE IS NO FROST IN THE GROUND AND FROST-FREE TOPSOIL PLANTING MIXTURES ARE USED.

6. UNLESS OTHERWISE APPROVED BY THE A/E, ALL PLANTS SHALL BE NURSERY GROWN IN ACCORDANCE WITH GOOD HORTICULTURAL PRACTICES AND SHALL HAVE BEEN GROWN UNDER CLIMATIC CONDITIONS SIMILAR TO THOSE IN THE LOCALITY OF THE PROJECT FOR AT LEAST TWO (2) YEARS.

7. SET PLANTS PLUMB AND AT SUCH A LEVEL THAT AFTER SETTLEMENT THEY BEAR THE SAME RELATION TO THE SURROUNDING GROUND AS THEY BORE TO THE GROUND FROM WHICH THEY WERE DUG. SETTLE BACKFILL MATERIAL FOR PLANTS, THOROUGHLY & PROPERLY, BY FIRMING OR TAMPING. ACCOMPANY BACKFILLING WITH THOROUGH WATERING UNLESS OTHERWISE APPROVED. FORM SAUCER CAPABLE OF HOLDING WATER AROUND INDIVIDUAL PLANTS.

8. FERTILIZE SHRUB BEDS WITH 10-6-4 FERTILIZER AT THE RATE OF 3 POUNDS PER 100 SQUARE FEET OF SURFACE AREA, BROAD CAST. APPLY THE FERTILIZER UNIFORMLY TO THE SURFACE BEDS AND WORK INTO THE UPPER TWO (2) INCHES OF SOIL. FERTILIZE INDIVIDUAL TREES AT THE RATE OF ONE (1) AGRIFORM PELLET PER INCH OF TREE DIAMETER (FOLLOW MANUFACTURER'S WRITTEN INSTRUCTIONS). APPLY A SECOND APPLICATION OF FERTILIZER TO ALL PLANT ITEMS AT THE SAME SPECIFIED RATES OVER THE MULCH AT THE END OF AN EIGHT WEEK PERIOD.

9. CONTAINER GROWN MATERIALS: REMOVE PLANT FROM CONTAINER AND "BUTTERFLY" ROOT BALL OR OTHERWISE SPREAD OUT ROOTS ON SETTING MOUND. BACKFILL SHALL BE SIFTED THROUGH THEM AND SOLIDLY FIRMED.

10. AFTER PLANTING PRUNE ONLY BROKEN OR DEFORMED BRANCHES AND IN SUCH MANNER AS TO PRESERVE NATURAL CHARACTER OF PLANT.

11. IMMEDIATELY AFTER PLANTING, STAKE TREES OVER FIVE (5) FEET AS INDICATED ON DETAIL DRAWING INDICATED OR APPROVED BY THE OWNERS REPRESENTATIVE.
MULCH SHALL BE APPLIED A MINIMUM OF THREE (3) INCHES IN DEPTH IN ALL PLANTING BEDS, AS INDICATED ON THE DRAWINGS.

12. THE PLANTS SHALL BE WATERED IMMEDIATELY FOLLOWING PLANTING, PREFERABLY WHEN TWO THIRDS OF THE BACKFILL HAS BEEN PLACED SO ALL AIR POCKETS ARE REMOVED AND THE PLANT PROPERLY SET. ADDITIONAL WATERING SHALL BE MADE AT LEAST ONCE EVERY THREE (3) WEEKS UNLESS OTHERWISE DIRECTED UNTIL FINAL ACCEPTANCE OF THE PLANT MATERIAL.

13. INSTALL 'JUTE MESH' EROSION CONTROL FABRIC WHERE FINAL GRADES ARE 3:1 (33%) OR GREATER PER MANUFACTURER'S INSTRUCTIONS.

14. UNLESS OTHERWISE SPECIFIED, CONTRACTOR TO LOAM AND SEED ALL DISTURBED AREAS.

SEEDING NOTE: USE UNIVERSITY OF RHODE ISLAND NO. 2 IMPROVED SEED MIX OR EQUAL.

TREE PRUNING NOTE: STREET TREES SHOULD BE PRUNED TO MAINTAIN A MINIMAL BRANCH HEIGHT OF 8' WITHIN TWO (2) YEARS OF INSTALLATION OF THE TREE.

15. LANDSCAPE ESTABLISHMENT AND MAINTENANCE NOTE: CONTRACTOR SHALL ENSURE THAT ALL LAWN AREAS AND PLANTINGS ARE FULLY ESTABLISHED AND ACCEPTABLE TO THE OWNER'S REPRESENTATIVE PRIOR TO RELINQUISHING THEIR RESPONSIBILITIES FOR MAINTENANCE OF THESE AREAS.

16. TREE PROTECTION NOTE: NO MATERIAL, TEMPORARY SOIL DEPOSIT OR EXCAVATION SHALL OCCUR WITHIN FOUR FEET OF SHRUBS OR WITHIN TWO FEET OF THE DRIP LINE OF ANY SHRUBS OR TREES TO REMAIN. ANY RETAINED EXISTING VEGETATION SHALL BE PROTECTED AS PER DETAIL ON PLAN.

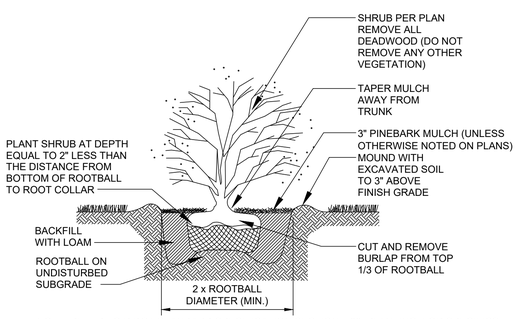

NOTE: REFER TO RIDOT STANDARD SPECIFICATION SECTION L.06, PLANTING, FOR SPECIFICS

SHRUB PLANTING DETAIL
no scale

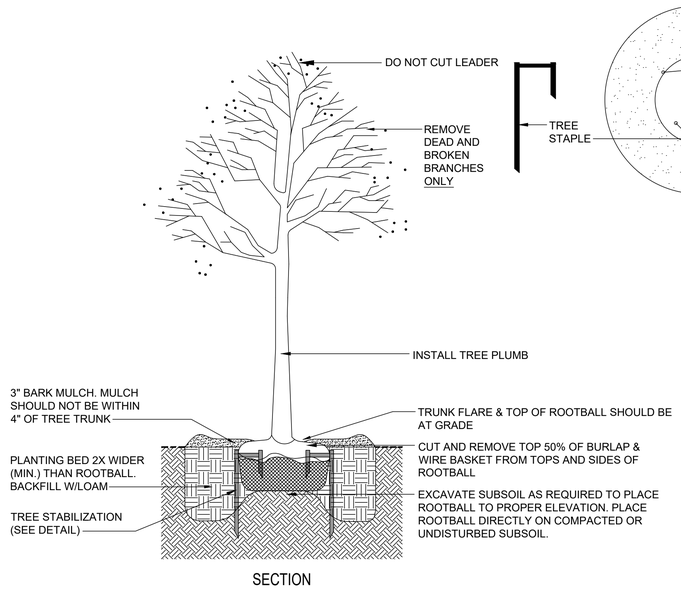

TREE PLANTING DETAIL
no scale

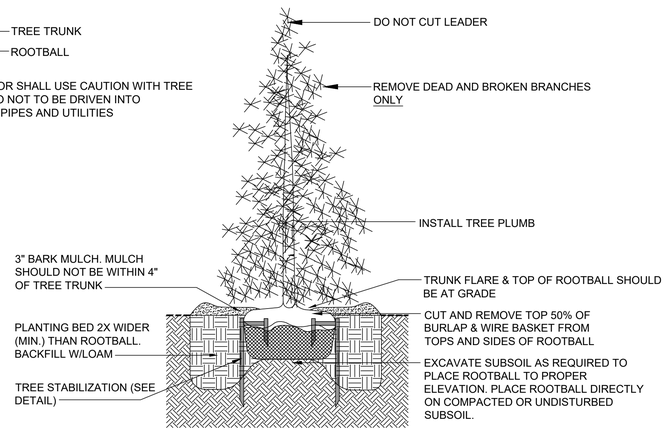

EVERGREEN TREE PLANTING DETAIL
no scale

ARCHITECTS

Saccoccio & Associates, Inc.

1085 Park Avenue
Cranston, Rhode Island 02910
tel 401.942.7970
fax 401.942.7975

Consultant

Diane C. Soule & Associates, ASLA
Landscape Architecture

422 Farnum Pike
Smithfield, Rhode Island 02917
www.dianesouleandassociates.com

401.231.0736
email: diane@dcsa.ws

Education Center & Pavilion

ROGER WILLIAMS PARK ZOO

1000 ELMWOOD AVENUE,
PROVIDENCE, RI 02907

Revision Schedule	
Revision Number	Revision Date

ISSUED FOR CONSTRUCTION
AUGUST 19, 2024

SHEET TITLE

PROJECT-WIDE

LANDSCAPE DETAILS & SCHEDULE

DRAWN BY:	DCS	JOB NUMBER:	7213-00
CHECKED BY:	DCS	DATE:	08/19/2024

A-L1.5

SHEET: X OF: X

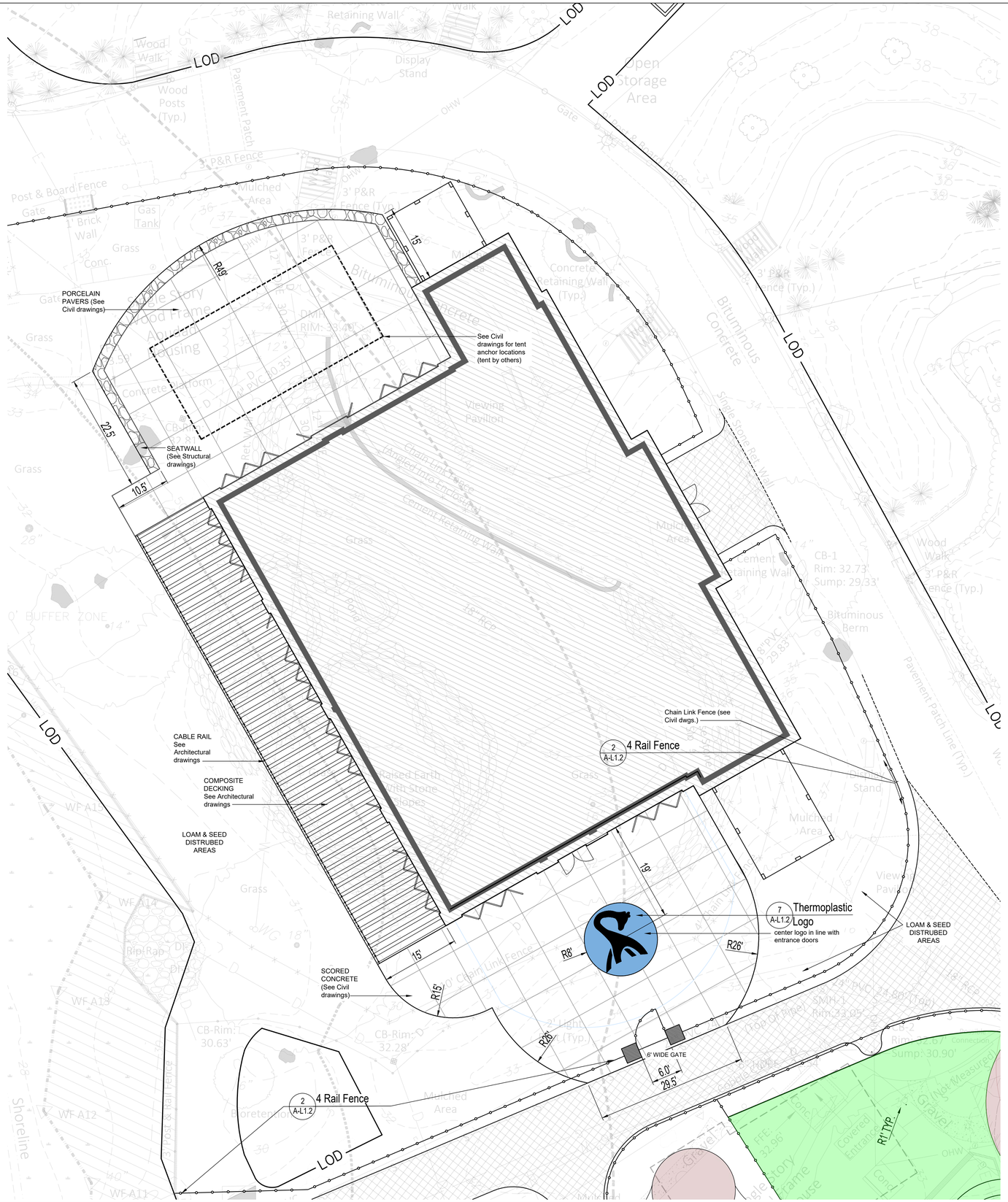

ARCHITECTS

Saccoccio & Associates, Inc.

1085 Park Avenue
Cranston, Rhode Island
02910

tel 401.942.7970
fax 401.942.7975

Consultant

Diane C. Soule & Associates, ASLA
Landscape Architecture

422 Farnum Pike
Smithfield, Rhode Island 02917
www.dianesouleandassociates.com

401.231.0736
email: diane@dcsa.ws

Education Center & Pavilion

ROGER WILLIAMS PARK ZOO

1000 ELMWOOD AVENUE,
PROVIDENCE, RI 02907

Revision Schedule	
Revision Number	Revision Date

ISSUED FOR CONSTRUCTION
AUGUST 19, 2024

SHEET TITLE

PAVILION

MATERIALS & LAYOUT PLAN

DRAWN BY:	DCS	JOB NUMBER:	7213-00
CHECKED BY:	DCS	DATE:	08/19/2024

B-L1.0

SHEET: X OF: X



North

10 0 10 20
SCALE IN FEET

ARCHITECTS

Saccoccio & Associates, Inc.
1085 Park Avenue
Cranston, Rhode Island 02910
tel 401.942.7970
fax 401.942.7975

Consultant

Diane C. Soule & Associates, ASLA
Landscape Architecture
422 Farnum Pike
Smithfield, Rhode Island 02917
www.dianesouleandassociates.com
401.231.0736
email: diane@dcsa.ws

Education Center & Pavilion

ROGER WILLIAMS PARK ZOO
1000 ELMWOOD AVENUE,
PROVIDENCE, RI 02907

Revision Schedule	
Revision Number	Revision Date

ISSUED FOR CONSTRUCTION
AUGUST 19, 2024

SHEET TITLE

PAVILION

LANDSCAPE PLAN

DRAWN BY:	DCS	JOB NUMBER:	7213-00
CHECKED BY:	DCS	DATE:	08/19/2024

B-L1.1

SHEET: X OF: X

ABBREVIATIONS

GENERAL ABBREVIATIONS:

AAV	AUTOMATIC AIR VENT	L	LENGTH
ADD'L	ADDITIONAL	LAT	LEAVING AIR TEMPERATURE
AFF	ABOVE FINISHED FLOOR	LB	POUND
AMS	AIR FLOW MEASURING STATION	LF	LINEAR FEET
ALT	ALTITUDE OR ALTERNATE	LD	LINEAR DIFFUSER
AMP	AMPERE	LRA	LOCKED ROTOR AMPS
AP	ACCESS PANEL	LVD	LOUVERED DOOR
APD	AIR PRESSURE DROP	LVG	LEAVING
ARCH	ARCHITECT	LWT	LEAVING WATER TEMPERATURE
ATC	AUTOMATIC TEMP. CONTROL		
ATM	ATMOSPHERE	MAX	MAXIMUM
AVG	AVERAGE	MBH	THOUSAND BTH
		MCA	MINIMUM CIRCUIT AMPS
BDD	BACKDRAFT DAMPER	MD	MOTOR OPERATED DAMPER
BG	BLAST GATE DAMPER	MECH	MECHANICAL
BHP	BRAKE HORSEPOWER	MEZZ	MEZZANINE
BI	BACKWARDS INCLINED	MFR	MANUFACTURER
BLDG	BUILDING	MIN	MINIMUM
BMS	BUILDING MANAGEMENT SYSTEM	MUA	MAKE-UP AIR
BOD	BOTTOM OF DUCT		
BOP	BOTTOM OF PIPE	N/A	NOT APPLICABLE
BSMT	BASEMENT	NC	NORMALLY CLOSED
BTU	BRITISH THERMAL UNIT	NC	NOISE CRITERIA
BTH	BTU PER HOUR	NIC	NOT IN CONTRACT
		NO	NORMALLY OPEN
CA	COMPRESSED AIR	No.	NUMBER
CDW	CONDENSER WATER	NOM	NOMINAL
CENT	CENTRIFUGAL	NTS	NOT TO SCALE
CF	CUBIC FEET		
CFM	CUBIC FEET PER MINUTE	OA	OUTSIDE AIR
CL	CENTERLINE	OD	OUTSIDE DIAMETER
C.L.	COLUMN LINE	ODP	OPEN DRIP PROOF
CND	CONDENSATE	OED	OPEN END DUCT
CLG	CEILING OR COOLING	OV	OUTLET VELOCITY
C.O.	CLEAN-OUT		
CO	CARBON MONOXIDE	PD	PRESSURE DROP
CO2	CARBON DIOXIDE	PH	PHASE
COL	COLUMN	PHC	PREHEAT COIL
CONN	CONNECTION	PBG	PLUMBING
CONTR	CONTRACTOR	POS	PROVIDED BY OTHER SECTION
CV	CONSTANT VOLUME	PSI	POUNDS PER SQUARE INCH
		PSIA	PSI ABSOLUTE
DB	DRY BULB TEMPERATURE	PSID	PSI DIFFERENTIAL
		PSIG	PSI GAUGE
DEG	DEGREE DIRECT	PVC	POLYVINYL CHLORIDE
DDC	DIGITAL CONTROL	PRV	PRESSURE REDUCING VALVE
DIA	DIAMETER		
DIFF	DIFFUSER	QTY	QUANTITY
DIM	DIMENSION		
DN	DOWN	R	RADIUS
DP	DIFFERENTIAL PRESSURE	RA	RETURN AIR
DWDI	DOUBLE WIDTH DOUBLE INLET	REG	REGISTER
DX	DIRECT EXPANSION	RET	RETURN
		REQD	REQUIRED
EA	EACH OR EXHAUST AIR	RH	RELATIVE HUMIDITY
EAT	ENTERING AIR TEMPERATURE	RLA	RUNNING LOAD AMPS
ECH	ELECTRIC CABINET HEATER	RLL	REFRIGERANT LIQUID LINE
EFF	EFFICIENCY	RM	ROOM
ELEC	ELECTRICAL	RPM	REVOLUTIONS PER MINUTE
ELEV	ELEVATION	RSL	REFRIGERANT SUCTION LINE
EMER	EMERGENCY		
EMS	ENERGY MANAGEMENT SYSTEM	SA	SUPPLY AIR
ENT	ENTER	SCH	SCHEDULE
ESP	EXTERNAL STATIC PRESSURE	SD	SMOKE DETECTOR
EWT	ENTERING WATER TEMPERATURE	SEN	SENSIBLE
EXH	EXHAUST	SHC	SENSIBLE HEAT CAPACITY
EXIST.	EXISTING	SP	STATIC PRESSURE
		SPECS	SPECIFICATIONS
F	FAHRENHEIT OR FAN	SQ	SQUARE
FA	FREE AREA	SF	SQUARE FEET
FD	FIRE DAMPER (ACCESS DOOR)	SS	STAINLESS STEEL
FLA	FULL LOAD AMPS	STL	STEEL
FLEX	FLEXIBLE	SUP	SUPPLY
FPM	FEET PER MINUTE	SWSI	SINGLE WITH SINGLE INLET
FPS	FEET PER SECOND		
FRP	FIBERGLASS REINFORCED PLASTIC	T	TEMPERATURE
FS	FLOW SWITCH	TEL	TELEPHONE
FT	FEET	TEFC	TOT. ENCLOSED FAN COOLED
FTR	FINNED TUBE RADIATION	TEMP	TEMPERATURE
		TSTAT	THERMOSTAT
G	GAS	TOD	TOP OF DUCT
GAL	GALLONS	TON	12,000 BTH
GALV	GALVANIZED	TOP	TOP OF PIPE
GC	GENERAL CONTRACTOR	TOT	TOTAL
GPH	GALLONS PER HOUR	TSP	TOTAL STATIC PRESSURE
GPM	GALLONS PER MINUTE	TYP	TYPICAL
GWB	GYPSUM WALL BOARD		
		V	VENT
HB	HOSE BIBB	VB	VACUUM BREAKER
HC	HEATING COIL	VD	VOLUME DAMPER
HEX	HEAT EXCHANGER	V	VOLTS (ELECTRICAL)
HGT	HEIGHT	VEL	VELOCITY
HP	HORSEPOWER		
HR	HOUR	W	WIDTH OR WATT
HTG	HEATING	W/	WITH
HW	HOT WATER	WB	WET BULB TEMPERATURE
HZ	HERTZ	WC	WATER COLUMN
		WG	WATER GAUGE
ID	INSIDE DIAMETER	WMS	WIRE MESH SCREEN
IN	INCHES	W/O	WITHOUT
		WPD	WATER PRESSURE DROP
KW	KILOWATT	WTD	WATER TEMPERATURE DIFF.

CONTROLS ABBREVIATIONS:

ACD	AUTOMATIC CONTROL DAMPER	LSPS	LOW STATIC PRESSURE SWITCH
ACV	AUTOMATIC CONTROL VALVE	LS	LEVEL SENSOR
AMS	AIR FLOW MEASURING STATION		
ALM	ALARM	MD	MOTORIZED DAMPER
ATC	AUTOMATIC TEMPERATURE CONTROL		
ATS	AIR TEMPERATURE SENSOR	NC	NORMALLY CLOSED (POWER LOSS)
		NO	NORMALLY OPEN (POWER LOSS)
BD	BACKDRAFT DAMPER		
BV	BYPASS VALVE	OAH	OUTSIDE AIR HUMIDITY SENSOR
		OAT	OUTSIDE AIR TEMP. SENSOR
CO2	CARBON DIOXIDE SENSOR		
CO	CARBON MONOXIDE SENSOR	RH	RELATIVE HUMIDITY
CT	CURRENT TRANSFORMER		
CV	CONTROL VALVE	S	SWITCH
		SP	STATIC PRESSURE SENSOR
DDC	DIRECT DIGITAL CONTROL	SD	SMOKE DETECTOR
DPS	DIFFERENTIAL PRESSURE SWITCH	SPD	SPEED CONTROL
DPT	DIFFERENTIAL PRESSURE SENSOR	S/S	START/STOP
DPV	DIFF. PRESSURE BYPASS VALVE		
DSD	DUCT MOUNTED SMOKE DETECTOR	T	THERMOSTAT
DWDI	DOUBLE WIDTH DOUBLE INLET	TS	TEMPERATURE SENSOR
ES	END SWITCH	WTS	WATER TEMPERATURE SENSOR
FM	FLOW METER/TRANSMITTER		
FZ	FREEZESTAT		
H	HUMIDISTAT		
HEPA	HIGH EFF. PARTICULATE AIR FILTER		
HGB	HOT GAS BYPASS		
HHL	HIGH HUMIDITY LIMIT SENSOR		
HOA	HANDS-OFF AUTOMATIC SWITCH		
HS	HUMIDITY SENSOR		
HZ	HERTZ		

EQUIPMENT ABBREVIATIONS:

AC	AIR CONDITIONING UNIT	GMS	GLYCOL MAKE-UP SYSTEM
ACU	AC CONDENSING UNIT	GUH	GAS FIRED UNIT HEATER
AHU	AIR HANDLING UNIT		
AS	AIR SEPARATOR	H	HUMIDIFIER
		HP	HEAT PUMP
B	BOILER	HPU	HP CONDENSING UNIT
BB	BASE BOARD	HV	HEATING & VENTILATING UNIT
BC	BRANCH CONTROLLER	HWC	HOT WATER COIL
BP	BOILER PUMP		
BT	BUFFER TANK	LV	LOUVER
CAC	CRITICAL COOLING AC UNIT	KEF	KITCHEN EXHAUST FAN
CC	COOLING COIL		
CCU	CC CONDENSING UNIT	MAU	MAKE-UP AIR UNIT
CEF	CEILING EXHAUST FAN	MCC	MOTOR CONTROL CENTER
CH	CHILLER		
CP	CIRCULATOR PUMP	P	PUMP
CT	COOLING TOWER	PTAC	PACKAGED TERMINAL AC UNIT
CUH	CABINET UNIT HEATER		
CWC	CHILLED WATER COIL	R	RETURN GRILLE
		REF	ROOF EXHAUST FAN
DC	DRY COOLER	RHP	RADIANT HEATING PANEL
DEF	DISHWASHER EXHAUST FAN	RTU	ROOF TOP UNIT
DSF	DESTRATIFICATION FAN		
		S	SUPPLY DIFFUSER
E	EXHAUST GRILLE	SA	SOUND ATTENUATOR
EBB	ELECTRIC BASE BOARD	SAC	SPLIT AC UNIT
ECH	ELECTRIC CABINET HEATER	SHP	SPLIT HEAT PUMP
ECH	ELECTRIC CEILING HEATER	SF	SUPPLY FAN
EF	EXHAUST FAN		
ERV	ENERGY RECOVERY VENTILATOR	T	TRANSFER GRILLE
ET	EXPANSION TANK		
EUH	ELECTRIC UNIT HEATER	UH	UNIT HEATER
		UV	UNIT VENTILATOR
F	FURNACE		
FC	FAN COIL UNIT	VAV	VARIABLE AIR VOLUME BOX
FPB	FAN POWERED VAV	VFD	VARIABLE FREQUENCY DRIVE
FT	FINTUBE		
		WSHP	WATER SOURCE HEAT PUMP

MECHANICAL SYMBOL LEGEND

AIR DEVICES

- 4-WAY SUPPLY DIFFUSER
- 3-WAY SUPPLY DIFFUSER
- 2-WAY SUPPLY DIFFUSER
- 2-WAY CORNER SUPPLY DIFFUSER
- 1-WAY SUPPLY DIFFUSER
- RETURN REGISTER
- EXHAUST REGISTER
- SIDE WALL SUPPLY DIFFUSER
- SIDE WALL RETURN OR EXHAUST GRILLE

DUCTWORK

- STANDARD SIZE REDUCTION
- ASYMMETRICAL TRANSITION
- SQUARE-TO-ROUND TRANSITION
- STANDARD BRANCH TAKE-OFF
- ROUND BRANCH TAKE-OFF
- STANDARD TEE
- STANDARD TEE WITH TURNING VANES
- SLOPED DUCT RISE
- FIRE DAMPER ACCESS DOOR
- GREASE DUCT ACCESS DOOR
- DUCT RISE
- DUCT DROP
- STANDARD SQUARE ELBOW
- SQUARE ELBOW WITH TURNING VANES
- STANDARD RADIUS ELBOW (R=D)
- FIRE WRAPPED DUCTWORK
- ACOUSTICALLY LINED DUCTWORK
- OPEN ENDED DUCT OUTLET
- OPEN ENDED DUCT INTAKE
- OPEN ENDED DUCT OUTLET W/ SCREEN
- OPEN ENDED DUCT INTAKE W/ SCREEN

CONTROLS

- THERMOSTAT
- TEMPERATURE SENSOR
- DUCT MOUNTED SMOKE DETECTOR

AIR DAMPERS

- MANUALLY ADJUSTABLE VOLUME DAMPER
- FIRE DAMPER
- MOTORIZED DAMPER

TAGS

- DIFFUSER TAG (X / # / CFM)
- EQUIPMENT TAG (X / #)
- REVISION (#)
- CONNECT NEW TO EXISTING

LEGEND NOTE:
NOT ALL SYMBOLS ARE NECESSARILY USED. ABSENCE OF A SYMBOL ON THE DRAWINGS DOES NOT NECESSARILY MEAN IT IS NOT REQUIRED. REFER TO DETAILS & SPECIFICATIONS FOR A COMPLETE UNDERSTANDING OF WORK REQUIRED.

GENERAL CONSTRUCTION NOTES:

1. ALL WORK IS TO BE PERFORMED IN STRICT COMPLIANCE WITH LOCAL CODES AND ALL OTHER REGULATIONS GOVERNING WORK OF THIS NATURE.
2. THE CONTRACTOR IS RESPONSIBLE FOR ALL WORK, MATERIALS, AND LABOR TO SATISFY A COMPLETE WORKING SYSTEM WHETHER SPECIFIED OR IMPLIED.
3. THIS CONTRACTOR, PRIOR TO SUBMITTING HIS BID, SHALL VISIT THE PROJECT SITE TO FAMILIARIZE HIMSELF WITH ALL EXISTING CONDITIONS. REQUESTS FOR COMPENSATION FOR EXTRA WORK, WHICH WOULD HAVE BEEN EVIDENT BY COMPLIANCE WITH THE PREVIOUS STATEMENT, WILL NOT BE CONSIDERED. THE CONTRACTOR SHALL CONDUCT A THOROUGH FIELD INVESTIGATION TO VERIFY WORK SHOWN ON THE DRAWINGS. THE DRAWINGS REFLECT THE BEST AVAILABLE INFORMATION FROM EXISTING PLANS AND SITE INVESTIGATIONS.
4. THE MECHANICAL PLANS ARE INTENDED TO BE DIAGRAMMATIC AND ARE BASED ON ONE MANUFACTURER'S EQUIPMENT. THEY ARE NOT INTENDED TO SHOW THE EXACT ROUTING OF SYSTEMS OR LOCATION OF COMPONENTS. THE EXACT LOCATIONS, DIMENSIONS AND ALL OTHER DETAILS OF EQUIPMENT ARE THE RESPONSIBILITY OF THIS CONTRACTOR. THIS CONTRACTOR SHALL VERIFY THE ACTUAL DIMENSIONS OF THE EQUIPMENT PROPOSED TO ENSURE THAT THE EQUIPMENT WILL FIT IN THE AVAILABLE SPACE. PROVIDE ALL DUCT AND PIPE TRANSITIONS REQUIRED FOR CONNECTION TO EQUIPMENT.
5. THIS CONTRACTOR SHALL FIELD VERIFY ALL DIMENSIONS AND EXISTING CONDITIONS PRIOR TO PROCEEDING WITH ANY WORK. WHERE DISCREPANCIES OCCUR BETWEEN THESE DOCUMENTS AND EXISTING CONDITIONS, THE DISCREPANCY SHALL BE REPORTED TO THE OWNER AND/OR ENGINEER FOR EXPEDITING AND RESOLVE.
6. ALL WORK SHALL BE PERFORMED IN A CLEAN AND WORKMANLIKE MANNER. CARE SHALL BE EXERCISED TO MINIMIZE ANY INCONVENIENCE OR DISTURBANCE TO OTHER AREAS OF THE BUILDING WHICH ARE TO REMAIN IN OPERATION. ISOLATE WORK AREAS BY MEANS OF TEMPORARY PARTITIONS AND/OR TARPS TO KEEP DUST AND DEBRIS WITHIN THE CONSTRUCTION AREA.
7. CLEAN THE JOB SITE DAILY AND REMOVE FROM THE PREMISES ANY DIRT AND DEBRIS CAUSED BY THE PERFORMANCE OF THE WORK INCLUDED IN THIS CONTRACT.
8. ALL OPENINGS IN WALLS SHALL BE KEPT PROPERLY SEALED AT ALL TIMES, EXCEPT WHEN BEING WORKED ON TO PRECLUDE THE POSSIBILITY OF FLOODING DUE TO STORM OR OTHER CAUSES.
9. THE CONTRACTOR SHALL BE RESPONSIBLE FOR THE SAFEKEEPING OF HIS OWN PROPERTY ON THE JOB SITE. OWNER ASSUMES NO RESPONSIBILITY FOR PROTECTION OF PROPERTIES AGAINST FIRE, THEFT, AND ENVIRONMENTAL CONDITIONS.
10. THIS CONTRACTOR SHALL COORDINATE HIS WORK WITH ALL OTHER TRADES PRIOR TO FABRICATION, PURCHASE AND/OR INSTALLATION OF ALL WORK. ALL OFFSETS IN PIPING AND DUCTS TO AVOID OBSTRUCTIONS SHALL BE PROVIDED AT NO COST TO THE OWNER.
11. CONTRACTOR SHALL REFER TO THE COMPLETE SET OF CONTRACT DOCUMENTS INCLUDING SPECIFICATIONS AND OTHER TRADES FOR A FULL UNDERSTANDING OF ALL WORK REQUIRED.
12. WHERE USED THE TERM "PROVIDE" SHALL MEAN "FURNISH AND INSTALL".
13. PROVIDE ALL REQUIRED RIGGING TO ACCOMMODATE THE REMOVAL & INSTALLATION OF ALL EQUIPMENT.
14. PROVIDE ACCESS PANELS FOR ALL CONCEALED DAMPERS, VALVES, AND EQUIPMENT.
15. ALL EQUIPMENT AND MATERIALS SHALL BE AS SPECIFIED OR "APPROVED EQUAL" BY THE ENGINEER OR ARCHITECT.
16. REFER TO ARCHITECTURAL REFLECTED CEILING PLAN FOR EXACT LOCATION OF REGISTERS, DIFFUSERS, AND GRILLES.
17. CONTRACTOR SHALL SPRAY PAINT INSIDE OF DUCT BLACK, BEHIND ALL GRILLES AND REGISTERS.
18. ALL DUCTWORK AND PIPING SHALL BE INSTALLED AS INDICATED ON THE DRAWINGS IN A NEAT AND WORKMANLIKE MANNER AND BE SUPPORTED AS REQUIRED BY CODES. DUCTWORK AND PIPING SHALL BE SET UP AND DOWN AND OFFSET AS REQUIRED TO SUIT FIELD CONDITIONS. DIELECTRIC COUPLINGS SHALL BE USED WHERE DISSIMILAR METALS ARE JOINED.
19. IF A SECTION OF DUCT OR PIPE IS NOT LABELED FOR SIZE, THEN THE LARGER SIZE INDICATED ON THE DRAWINGS SHALL PREVAIL. SIZE OF DUCT RUN-OUTS TO DIFFUSERS SHALL EQUAL DIFFUSER NECK SIZE UNLESS OTHERWISE NOTED.
20. PROVIDE ALL NECESSARY TEMPORARY OR PERMANENT CAPS OR PLUGS FOR PIPING. DO NOT LEAVE PIPING OPEN ENDED.
21. PROVIDE CONDENSATE PUMPS THROUGHOUT CONDENSATE DRAINAGE SYSTEM AS REQUIRED TO PROPERLY REMOVE CONDENSATE. PROVIDE A PER PUMP LINE-ITEM ALLOWANCE.
22. REFRIGERANT PIPE SIZING SHALL BE PER MANUFACTURER'S RECOMMENDATIONS. LENGTH OF PIPE, ELEVATION CHANGE AND EQUIPMENT ORIENTATION SHALL BE TAKEN INTO ACCOUNT.
23. SUCCESSFULLY PRESSURE TEST ALL REROUTED PIPING SYSTEMS. TEST SHALL BE PERFORMED AT TWICE SYSTEM OPERATING PRESSURES. REPAIR AND RETEST AS REQUIRED UNTIL SYSTEMS PROVE TIGHT.
24. ALL ROOF MOUNTED EQUIPMENT SHALL BE INSTALLED A MINIMUM OF 10' FROM THE ROOF EDGE. EQUIPMENT INSTALLED CLOSER THAN 10' SHALL REQUIRE THE INSTALLATION OF GUARD RAILS.
25. ALL CONCEALED ELECTRICAL CONNECTIONS SHALL BE HARD WIRED. PLUGS SHALL NOT BE USED AS A DISCONNECTING MEANS IN CONCEALED LOCATIONS.
26. CONTRACTOR SHALL PROVIDE ALL TEMPERATURE CONTROLS INCLUDING WIRING, TUBING, AND THERMOSTATS (WITH LOCKING COVERS) AND ALL MISCELLANEOUS APPURTENANCES TO MEET THE INTENT OF THESE DOCUMENTS.
27. DUCT SMOKE DETECTORS SHALL BE FURNISHED BY ELECTRICAL CONTRACTOR, INSTALLED IN THE DUCTWORK BY MECHANICAL CONTRACTOR AND WIRED BY THE ELECTRICAL CONTRACTOR.
28. ALL FRESH AIR INTAKES & DIRECT VENTS SHALL TERMINATE AT LEAST 10' HORIZONTALLY FROM ANY GAS METERS.
29. ALL THERMOSTATS, CONTROL SWITCHES, ETC. SHALL BE INSTALLED 48" AFF.

GENERAL RENOVATION NOTES:

1. ALL SHUT DOWNS OF EXISTING SYSTEMS SHALL BE SCHEDULED AND APPROVED BY THE OWNER PRIOR TO COMMENCING WITH WORK.
2. NO DUCTWORK, PIPING, EQUIPMENT, ETC. SHALL BE REMOVED, DISCONNECTED, OR SHUT DOWN WITHOUT PRIOR REVIEW WITH THE OWNER AND/OR ENGINEER TO CONFIRM THAT AREAS TO REMAIN IN OPERATION WILL NOT BE AFFECTED. IF ANY AREAS NOT WITHIN THE SCOPE OF WORK ARE AFFECTED BY ANY SHUTDOWN, REMOVAL, OR DISCONNECTION, 1 WEEK NOTICE MUST BE GIVEN TO THE OWNER INDICATING WHICH AREAS WILL BE AFFECTED, WHEN THE PROPOSED SHUTDOWN WILL OCCUR, AND FOR HOW LONG A PERIOD.
3. USE OF THE OWNER'S ELEVATORS AND BUILDING CORRIDORS FOR HANDLING OF THE OWNER'S AND REMOVED EQUIPMENT AND MATERIALS SHALL BE AT THE DIRECTION OF THE OWNER AND SHALL BE COORDINATED WITH HIS OPERATIONS.
4. ALL ITEMS REMOVED SHALL BECOME PROPERTY OF THE OWNER AND SHALL BE DISPOSED OF AS PER OWNER'S INSTRUCTIONS, UNLESS INDICATED OTHERWISE. ALL ITEMS WHICH ARE NOT TO BE STORED ON SITE BY OWNERS SHALL BE REMOVED FROM THE BUILDING IMMEDIATELY.
5. DISCONNECT AND REMOVE ALL EXISTING EQUIPMENT, PIPING, DUCTWORK, FLUES, REGISTERS, SUPPORTS, HANGERS, AND ALL OTHER MECHANICAL COMPONENTS MADE OBSOLETE BY THIS PROJECT.
6. PRIOR TO RENOVATION, CONTRACTOR TO RECORD ALL SUPPLY & RETURN MAIN AIRFLOWS & SUBMIT A COPY TO THE ENGINEER. ALL READINGS SHALL BE PERFORMED BY A CERTIFIED NEBB CONTRACTOR. COMPARE NEW EQUIPMENT VALUES & ALERT DISCREPANCIES FOR ENGINEER FEEDBACK. AT THE END OF THE PROJECT EXISTING SYSTEMS SHALL BE BALANCED TO PRE-CONSTRUCTION VALUES OR ADJUSTED VALUES BASED ON PRE-CONSTRUCTION TESTING ENGINEERING FEEDBACK.
7. ALL NEW, RELOCATED, OR EXISTING EQUIPMENT AFFECTED BY THIS SCOPE OF WORK SHALL BE REBALANCED BEFORE BEING PLACED IN SERVICE.
8. PROVIDE ALL REQUIRED CUTTING AND PATCHING AS REQUIRED TO COMPLETE THE INSTALLATION OF NEW MECHANICAL SYSTEM. PATCH ALL SURFACES TO MATCH AND MAINTAIN ALL FIRE RATINGS.
9. EXISTING ROOF CUTTING, FLASHING, SEALING, ETC. TO BE ACCOMPLISHED BY A ROOFING CONTRACTOR APPROVED BY THE EXISTING ROOF MANUFACTURER AND INSTALLED IN ACCORDANCE WITH ROOF MANUFACTURER'S RECOMMENDATIONS SO AS NOT TO VOID ROOF WARRANTY.
10. EXISTING MATERIALS THAT ARE REMOVED SHALL NOT BE REUSED IN NEW SYSTEMS, EXCEPT WHERE INDICATED AS SUCH ON THE DRAWINGS. ALL MATERIALS AND EQUIPMENT LISTED AS NEW MUST BE NEW.
11. THE FIRE PROOFING OF THE EXISTING STRUCTURE IS NOT TO BE REMOVED FOR THE INSTALLATION OF HANGERS, SUPPORTS AND DUCTWORK ETC. IF FIRE PROOFING IS DAMAGED, IT SHALL BE REPAIRED AT THE EXPENSE OF THE TRADE.

ARCHITECTS

Saccoccio & Associates, Inc.

1085 Park Avenue
Cranston, Rhode Island 02910

tel 401.942.7970
fax 401.942.7975

Consultant

ENGINEERING design SERVICES INCORPORATED
149 Pennsylvania Avenue, Warwick, RI 02889
Tel (401) 765-7500 Fax (401) 765-2964

ROGER WILLIAMS PARK ZOO
100 ELMWOOD AVENUE
PROVIDENCE, RI 02907

Revision Schedule

Revision Number	Revision Date

Education Center, Animal Building, & Pavilion

Issued for Bid
08/19/2024

SHEET TITLE

MECHANICAL LEGENDS & NOTES

DRAWN BY:	MFM/AJV	JOB NUMBER:	18050
CHECKED BY:	WTM	DATE:	08/19/2024

M0.0

SHEET: OF:

ENERGY RECOVERY UNIT SCHEDULE (BASED ON GREENHECK)

SYMBOL	MODEL	DESIGN CONDITIONS				OUTDOOR AIR PERFORMANCE				EXHAUST AIR PERFORMANCE				WHEEL SUPPLY CONDITIONS		COOLING PERFORMANCE DATA							HEATING PERFORMANCE DATA					SUPPLEMENTAL HEATING DATA			ELECTRICAL DATA			APROX. WEIGHT (LBS)	NOTES
		SUMMER		WINTER										SUMMER	WINTER																				
		OUTDOOR	INDOOR	OUTDOOR	INDOOR																													
		DB°F/WB°F	DB°F/RH%	DB°F/WB°F	DB°F/RH%	CFM	ESP	FAN RPM	HP	CFM	ESP	FAN RPM	HP	DB°F/WB°F	DB°F/WB°F	TYPE	CIRCUITS	TOTAL MBH	SENSIBLE MBH	LDB °F	LWB °F	REHEAT MBH	TYPE	MBH INPUT	MBH OUTPUT	EDB °F	LDB °F	KW	MBH	ATR °F	MCA	MOP	VOLTAGE		
ERU-1	RVE-85-58E-15A-1-D1	100.0/78.0	75.0/50	0.0/-1.0	72.0/35.0	3790	1.5	1369	3	3790	1.5	1296	3	81.8/67.2	52.5/44.5	PACKAGED HP	1	184.2	126.8	51.3	51.0	88.5	PACKAGED HP	-	81.1	55.2	75.0	41.0	113.8	-	218.1	225.0	208/3/60	5400	1,2,3,4,5,6,7,8,9,10
ERU-2	RVE-40-30D-5I-C-A1	100.0/78.0	75.0/50	0.0/-1.0	72.0/35.0	1020	1.3	1326	1	1020	1.3	1326	1	79.5/66.3	54.4/45.0	PACKAGED DX	1	61.0	38.4	45.2	45.2	13.6	INDIRECT GAS	100.0	81.0	54.4	127.8	-	-	-	32.3	45.0	208/3/60	3300	1,2,3,4,5,6,7,8,10

NOTES:
1. PROVIDE WITH DISCONNECT. REFER TO ELECTRICAL PLANS FOR RATINGS AND COORDINATE WITH E.C.
2. PROVIDE WITH DOUBLE WALL CONSTRUCTION, SUPPLY & EXHAUST VFDs, PERMATECTOR COATING, & AL ENERGY WHEEL.
3. PROVIDE WITH FACTORY CONTROLS, BMS INTERFACE CARD, SUPPLY DUCT STATIC CONTROL, EXHAUST FAN TRACKING.
4. PROVIDE WITH RAI, ACC, OAAW, & EAW BMS MONITORING POINTS.
5. PROVIDE WITH WHEEL ROTATION SENSOR, DAMPER END SWITCHES, ENTHALPY ECONOMIZER, & ENERGY WHEEL VFD.
6. PROVIDE WITH DIRTY FILTER SENSOR, MODULATING WHEEL FROST CONTROL, LOW LEAKAGE DAMPERS, & MERV 8 & 13 FILTERS.
7. PROVIDE WITH SPRING ISOLATED ROOF CURB.
8. PROVIDE WITH MODULATING REHEAT COIL, ELECTRO FIN COATING ON ALL COILS, UV LIGHTS & BIPOLAR IONIZATION.
9. UNIT SHALL BE FIELD FIT WITH A DX HEATING COIL. REFER TO COIL SCHEDULE FOR ADDITIONAL INFORMATION.
10. WEIGHT IS APPROXIMATE.

SPLIT FAN COIL AC UNIT SCHEDULE (BASED ON MITSUBISHI)

SYMBOL	MODEL	OA CFM	CFM	ESP	COOLING (95°F)		HEATING (°F)	ELECTRICAL DATA		NOTES
					TOTAL MBH	SENSIBLE MBH	MBH	MCA	MOCP	VOLTAGE	
SAC-1	MSY-GS12NA	-	424	-	12.0	10.0	-	1.0	POWERED BY OUTDOOR		1,2,4

SYMBOL	MODEL	COMP RLA	COMP LRA	NOMINAL MBH	EFFICIENCIES		ELECTRICAL DATA			NOTES
					SEER	HSPF	MCA	MAX. FUSE	VOLTAGE	
SCU-1	MUY-GS12NA	9.2	7.4	12.0	26.1	12.5	10	15	208/1/60	1,3,5,6

NOTES:
1. PROVIDE WITH DISCONNECT. REFER TO ELECTRICAL PLANS FOR RATINGS & COORDINATE WITH E.C.
2. PROVIDE WITH FACTORY CONDENSATE PUMP AND PROVIDE UNIT WITH HIGH ESP OPTION.
3. INDOOR UNIT IS POWERED THROUGH THE OUTDOOR UNIT.
4. PROVIDE WITH SPACE MOUNTED TEMPERATURE SENSOR AND THERMOSTAT.
5. PROVIDE WITH AN 18" SLING STAND.
6. EQUIPMENT PERFORMANCE DATA SELECTED AT AHRI CONDITIONS.

AIRFLOW REGULATOR SCHEDULE (BASED ON AMERICAN ALDES)

TAG	MODEL	SIZE (IN)	PRIMARY AIR FLOW (CFM)		INLET PRESSURE (IN.WG)		NOTES
			MINIMUM	MAXIMUM	MINIMUM	MAXIMUM	
CAR-4	CAR3-L4-R4	4	15	85	0.12	1.2	1,2,3
CAR-5	CAR3-L5-R5	5	35	180	0.12	1.2	1,2,3
CAR-6	CAR3-L6-R6	6	45	260	0.12	1.2	1,2,3

NOTES:
1. REGULATORS SHALL BE FIELD SET TO THE APPROPRIATE AIRFLOW. REFER TO FLOOR PLANS & SCHEDULES FOR MORE INFORMATION.
2. INSTALL PER MANUFACTURER'S RECOMMENDATIONS.
3. REGULATORS SHALL BE INSTALLED IN ACCESSIBLE LOCATION OR PROVIDED WITH CEILING ACCESS PANEL.

REFRIGERANT LEAK DETECTOR SCHEDULE

SYMBOL	MANUFACTURER	MODEL	ELECTRICAL DATA		NOTES
			AMPS	VOLTAGE	
RLD-101-111	SENSAC	U4762R410A	0.044	120/1/60	1,2,3,4,5
RLD-201-213	SENSAC	U4762R410A	0.044	120/1/60	1,2,3,4,5
RLD-301-307	SENSAC	U4762R410A	0.044	120/1/60	1,2,3,4,5

NOTES:
1. REFER TO ELECTRICAL PLANS FOR RATINGS & COORDINATE WITH E.C.
2. SENSOR SHALL INCLUDE ONBOARD ALARM RELAYS, AUDIBLE HORN, & LED LIGHTING.
3. UNIT SHALL BE RECESSED IN WALL IN A STANDARD 2-GANG ELECTRICAL BOX.
4. UNIT SHOULD BE MOUNTED APPROXIMATELY 12" TO 18" ABOVE FINISHED FLOOR.
5. INSTALL PER MANUFACTURER INSTALLATION INSTRUCTIONS.

VAV BOX SCHEDULE (BASED ON PRICE)

TAG	MODEL	INLET	AIRFLOW RANGE (CFM)		VOLTAGE	NOTES
			MAXIMUM	MINIMUM		
VAV-1,2	SDVQ	8	550	190	115/1/60	1,2,3
VAV-3,4	SDVQ	8	450	180	115/1/60	1,2,3
VAV-5	SDVQ	8	470	180	115/1/60	1,2,3

NOTES:
1. PROVIDE WITH 22 GA CONSTRUCTION, FIBERGLASS INSULATION & POLYMER LINED ATTENUATOR.
2. PROVIDE WITH 115-24V TRANSFORMER & ELECTRICAL DISCONNECT.
3. PROVIDE WITH DIGITAL CONTROLS & SPACE MOUNTED CO2 SENSOR.

VRV INDOOR UNIT SCHEDULE (BASED ON MITSUBISHI)

SYMBOL	CONDENSER SYMBOL	BRANCH CONTROLLER	MODEL	TYPE	NOMINAL CAPACITY	AIRFLOW CFM	OUTDOOR AIR CFM	COOLING DATA				HEATING DATA		ELECTRICAL DATA			APROX. WEIGHT (LBS)	NOTES
								RA °Fdb	RA °FwB	TOTAL MBH	SENS. MBH	RA °Fdb	MBH	MCA	MOP	VOLTAGE		
FC-101	HPU-100	BC-100	PEFY-P15NMAU-E4	MED. STATIC DUCTED	1.3 T	490	190	80.0	67.0	14.7	11.2	70.0	12.7	2.9	15	208/1/60	60	1,2,3,4
FC-102	HPU-100	BC-100	PEFY-P12NMAU-E4	MED. STATIC DUCTED	1.0 T	330	30	80.0	67.0	11.7	8.3	70.0	10.1	2.1	15	208/1/60	65	1,2,3,4
FC-103	HPU-100	BC-100	PEFY-P12NMAU-E4	MED. STATIC DUCTED	1.0 T	330	30	80.0	67.0	11.7	8.3	70.0	10.1	2.1	15	208/1/60	65	1,2,3,4
FC-104	HPU-100	BC-100	PEFY-P30NMAU-E4	MED. STATIC DUCTED	2.5 T	880	550	80.0	67.0	29.5	21.3	70.0	25.5	2.9	15	208/1/60	70	1,2,3,4
FC-105	HPU-100	BC-100	PEFY-P30NMAU-E4	MED. STATIC DUCTED	2.5 T	880	500	80.0	67.0	29.5	21.3	70.0	25.5	2.9	15	208/1/60	70	1,2,3,4
FC-106	HPU-100	BC-100	PEFY-P30NMAU-E4	MED. STATIC DUCTED	2.5 T	880	450	80.0	67.0	29.5	21.3	70.0	25.5	2.9	15	208/1/60	70	1,2,3,4
FC-107	HPU-100	BC-100	PEFY-P30NMAU-E4	MED. STATIC DUCTED	2.5 T	880	450	80.0	67.0	29.5	21.3	70.0	25.5	2.9	15	208/1/60	70	1,2,3,4
FC-108	HPU-100	BC-100	PEFY-P30NMAU-E4	MED. STATIC DUCTED	2.5 T	880	470	80.0	67.0	29.5	21.3	70.0	25.5	2.9	15	208/1/60	70	1,2,3,4
FC-109	HPU-100	BC-100	PLFY-P08NFMU-E	CEILING CASSETTE	0.9 T	280	30	80.0	67.0	7.8	6.2	70.0	6.7	0.3	15	208/1/60	40	1,2,3,4
FC-110	HPU-100	BC-100	PLFY-P08NFMU-E	CEILING CASSETTE	0.9 T	280	30	80.0	67.0	7.8	6.2	70.0	6.7	0.3	15	208/1/60	40	1,2,3,4
FC-111	HPU-100	BC-100	PEFY-P15NMAU-E4	MED. STATIC DUCTED	1.3 T	490	100	80.0	67.0	14.7	11.2	70.0	12.7	2.9	15	208/1/60	60	1,2,3,4
FC-201	HPU-200	BC-200	PLFY-P12NFMU-E	CEILING CASSETTE	1.0 T	330	40	80.0	67.0	11.9	8.0	70.0	9.0	0.3	15	208/1/60	40	1,2,3,4
FC-202	HPU-200	BC-200	PEFY-P30NMAU-E4	MED. STATIC DUCTED	2.5 T	880	300	80.0	67.0	29.8	25.9	70.0	22.7	2.9	15	208/1/60	70	1,2,3,4
FC-203	HPU-200	BC-200	PEFY-P06NMAU-E4	MED. STATIC DUCTED	0.5 T	210	20	80.0	67.0	5.9	5.7	70.0	4.8	1.2	15	208/1/60	50	1,2,3,4
FC-204	HPU-200	BC-200	PLFY-P05NFMU-E	CEILING CASSETTE	0.4 T	230	20	80.0	67.0	5.9	5.7	70.0	4.8	0.2	15	208/1/60	40	1,2,3,4
FC-205	HPU-200	BC-200	PLFY-P05NFMU-E	CEILING CASSETTE	0.4 T	230	20	80.0	67.0	5.9	5.7	70.0	4.8	0.2	15	208/1/60	40	1,2,3,4
FC-206	HPU-200	BC-200	PLFY-P05NFMU-E	CEILING CASSETTE	0.4 T	230	20	80.0	67.0	5.9	5.7	70.0	4.8	0.2	15	208/1/60	40	1,2,3,4
FC-207	HPU-200	BC-200	PLFY-P24NEMU-E	CEILING CASSETTE	2.0 T	670	0	80.0	67.0	23.8	16.8	70.0	18.0	0.5	15	208/1/60	60	1,2,3,4
FC-208	HPU-200	BC-200	PLFY-P05NFMU-E	CEILING CASSETTE	0.4 T	230	20	80.0	67.0	5.9	5.7	70.0	4.8	0.2	15	208/1/60	40	1,2,3,4
FC-209	HPU-200	BC-200	PLFY-P05NFMU-E	CEILING CASSETTE	0.4 T	230	20	80.0	67.0	5.9	5.7	70.0	4.8	0.2	15	208/1/60	40	1,2,3,4
FC-210	HPU-200	BC-200	PLFY-P05NFMU-E	CEILING CASSETTE	0.4 T	230	20	80.0	67.0	5.9	5.7	70.0	4.8	0.2	15	208/1/60	40	1,2,3,4
FC-211	HPU-200	BC-200	PLFY-P05NFMU-E	CEILING CASSETTE	0.4 T	230	20	80.0	67.0	5.9	5.7	70.0	4.8	0.2	15	208/1/60	40	1,2,3,4
FC-212	HPU-200	BC-200	PLFY-P05NFMU-E	CEILING CASSETTE	0.4 T	230	20	80.0	67.0	5.9	5.7	70.0	4.8	0.2	15	208/1/60	40	1,2,3,4
FC-213	HPU-200	BC-200	PEFY-P36NMAU-E4	MED. STATIC DUCTED	3.0 T	1080	100	80.0	67.0	34.2	22.8	70.0	30.5	4.3	15	208/1/60	90	1,2,3,4
FC-301	HPU-300	BC-300	PEFY-P24NMAU-E4	MED. STATIC DUCTED	2.0 T	880	225	80.0	67.0	24.0	19.2	70.0	22.7	2.9	15	208/1/60	70	1,2,3,4
FC-302	HPU-300	BC-300	PEFY-P24NMAU-E4	MED. STATIC DUCTED	2.0 T	880	205	80.0	67.0	24.0	19.2	70.0	22.7	2.9	15	208/1/60	70	1,2,3,4
FC-303	HPU-300	BC-300	PEFY-P12NMAU-E4	MED. STATIC DUCTED	1.0 T	330	75	80.0	67.0	12.0	8.4	70.0	11.4	2.1	15	208/1/60	65	1,2,3,4
FC-304	HPU-300	BC-300	PEFY-P18NMAU-E4	MED. STATIC DUCTED	1.5 T	600	150	80.0	67.0	18.0	16.9	70.0	16.8	2.9	15	208/1/60	65	1,2,3,4
FC-305	HPU-300	BC-300	PEFY-P18NMAU-E4	MED. STATIC DUCTED	1.5 T	600	65	80.0	67.0	18.0	16.9	70.0	16.8	2.9	15	208/1/60	65	1,2,3,4
FC-306	HPU-300	BC-300	PEFY-P08NMAU-E4	MED. STATIC DUCTED	0.8 T	300	100	80.0	67.0	8.0	6.4	70.0	7.6	1.8	15	208/1/60	60	1,2,3,4
FC-307	HPU-300	BC-300	PEFY-P06NMAU-E4	MED. STATIC DUCTED	0.5 T	300	100	80.0	67.0	6.0	5.8	70.0	5.6	1.8	15	208/1/60	60	1,2,3,4

NOTES:
1. PROVIDE WITH DISCONNECTS. REFER TO ELECTRICAL PLANS FOR RATINGS & COORDINATE WITH E.C.
2. PROVIDE WITH MICRO CONDENSATE PUMP.
3. REFER TO MANUFACTURERS' GUIDELINES FOR LINE SIZING, CONTROLS WIRING, AND ALL INSTALLATION INSTRUCTIONS.
4. PROVIDE WITH SPACE MOUNTED THERMOSTAT OR SENSOR AS INDICATED ELSEWHERE ON PLANS.

VRV HEAT PUMP SCHEDULE (BASED ON MITSUBISHI)

SYMBOL	ASSOCIATED BC	MODEL	NOMINAL CAPACITY		COOLING DATA		HEATING DATA		EFFECIENCIES			ELECTRICAL DATA				APROX. WEIGHT (LBS)	NOTES
			COOLING	HEATING	OAT °F	TOTAL MBH	OAT °F	TOTAL MBH	EER	IEER	COP	CONNECTIONS	MCA	RFS	VOLTAGE		
HPU-100	BC-100	PURY-EP288TSNU-A-BS	216.0	243.0	100.0	215.3	0.0	186.6	10.5	20.9	3.73	2	56.0/55.0	60/60	208/3/60	1400	1,2,3,4,5,6,7
HPU-200	BC-200	PURY-EP144TSNU-A-BS	144.0	160.0	100.0	147.0	0.0	110.9	10.0	21.9	3.68	1	60.0	60	208/3/60	1300	1,2,3,4,5,6,7
HPU-300	BC-300	PURY-EP120TNU-A1	120.0	135.0	100.0	124.0	0.0	103.7	10.5	22.35	3.875	1	56.0	60	208/3/60	1300	1,2,3,4,5,6,7

NOTES:
1. PROVIDE WITH DISCONNECTS. REFER TO ELECTRICAL PLANS FOR RATINGS & COORDINATE WITH E.C.
2. UNIT CONSISTS OF A MULTIPLY UNITS COUPLED TOGETHER. PROVIDE WITH TWINNING KITS. EACH UNIT REQUIRES SEPARATE ELECTRICAL CONNECTIONS, DISCONNECTS & LOW AMBIENT CONTROLS.
3. REFER TO MANUFACTURERS' GUIDELINES FOR LINE SIZING, AND ALL INSTALLATION INSTRUCTIONS.
4. PROVIDE EACH SYSTEM WITH MULTI CONNECTION PIPING MANIFOLDED BC CONTROLLERS & BALL VALVE FOR ISOLATION AT EACH REFRIGERATION PIPE RUNOUT.
5. PROVIDE AG-150 PACKAGE, WEB BASED, FACTORY START-UP AND ALL ADDITIONAL ACCESSORIES REQUIRED FOR COMPLETE SYSTEM OPERATION.
6. FURNISH AND INSTALL ALL REQUIRED INTERLOCKING CONTROLS & PIPING FOR REQUIRED SEQUENCE OF OPERATIONS.
7. REFER TO PIPING DIAGRAM FOR ADDITIONAL INFORMATION.
8. PROVIDE WITH SEA-COAST COATING.

BRANCH CONTROLLER SCHEDULE (BASED ON MITSUBISHI)

SYMBOL	MODEL	TYPE	ASSOCIATED HEAT PUMP	CONNECTED CAPACITY (MBH)	PORTS	ELECTRICAL DATA		APROX. WEIGHT (LBS)	NOTES
						MCA	VOLTAGE		
BC-100	CMB-P1012NU-JA1	MAIN	HPU-100	215.3	12	1.2	208/1/60	150	1,2,3,4
BC-200	CMB-P1016NU-JA1	MAIN	HPU-200	179.7	16	1.6	208/1/60	150	1,2,3,4
BC-300	CMB-P108NU-JA2	MAIN	HPU-300	110.0	8	0.9	208/1/60	60	1,2,3,4

NOTES:
1. PROVIDE WITH DISCONNECT. REFER TO ELECTRICAL PLANS FOR RATINGS & COORDINATE WITH E.C.
2. PROVIDE WITH FULL PORT BALL VALVES.
3. PROVIDE WITH CONDENSATE PUMP.
4. REFER TO MANUFACTURERS' GUIDELINES FOR LINE SIZING, CONTROLS WIRING, AND ALL INSTALLATION INSTRUCTIONS.

ARCHITECTS
Saccoccio & Associates, Inc.
1085 Park Avenue
Cranston, Rhode Island
02910
tel 401.942.7970
fax 401.942.7975
Consultant
ENGINEERING DESIGN SERVICES INCORPORATED

Education Center, Animal Building, & Pavilion

ROGER WILLIAMS PARK ZOO
100 ELMWOOD AVENUE
PROVIDENCE, RI 02907

Revision Schedule	
Revision Number	Revision Date

Issued for Bid
08/19/2024

SHEET TITLE

MECHANICAL SCHEDULES

DRAWN BY:	MFM/AJV	JOB NUMBER:	18050
CHECKED BY:	WTM	DATE:	08/19/2024

M3.1

SHEET: OF:

AIR DEVICE SCHEDULE

SYMBOL	MANUFACTURER	MODEL	TYPE	THROW	CFM	NECK SIZE	NOTES
S-1	PRICE	SPD	SQUARE PLAQUE	SEE PLANS	20-110	6Ø	1,2,3
S-2	PRICE	520	LOUVERED GRILLE	DOUBLE DEFL	40-150	12x6	1,2,6
S-3	PRICE	HCD	HIGH CAPACITY DRUM	DOUBLE DEFL	120	6x10	1,2,6
S-4	PRICE	SPD	SQUARE PLAQUE	4-WAY	130-210	8Ø	1,2,3
S-5	PRICE	RCD	ROUND CONE	RADIAL	150-220	8Ø	1,2,7
S-6	PRICE	RCD	ROUND CONE	RADIAL	260-300	10Ø	1,2,7
S-7	PRICE	SPD	SQUARE PLAQUE	4-WAY	360	10Ø	1,2,3
S-8	CAPTIVEAIRE	DI-PSP	PERFORATED GRILLE	-	400	10Ø	1,2,4,8
S-9	PRICE	RCD	ROUND CONE	RADIAL	440	12Ø	1,2,7
S-10	PRICE	HCD	HIGH CAPACITY DRUM	DOUBLE DEFL	675	12x18	1,2,6
R-1	PRICE	535	LOUVERED GRILLE	-	210-300	10x10	1,2,3,5
R-2	PRICE	535	LOUVERED GRILLE	-	440-490	14x14	1,2,4,5
R-3	PRICE	535	LOUVERED GRILLE	-	600-630	16x16	1,2,4,5
R-4	PRICE	535	LOUVERED GRILLE	-	880	20x14	1,2,4,5
R-5	PRICE	535	LOUVERED GRILLE	-	1080	20x16	1,2,4,5
R-6	PRICE	535	LOUVERED GRILLE	-	1400	22x22	1,2,4
R-7	PRICE	535	LOUVERED GRILLE	-	3000	40x24	1,2,4
E-1	PRICE	PDDR	PERFORATED GRILLE	-	30-100	6Ø	1,2,3
E-2	PRICE	535	LOUVERED GRILLE	-	70-200	6x6	1,2,3,5
E-3	PRICE	535	LOUVERED GRILLE	-	150-170	8Ø	1,2,3,5
E-4	PRICE	535	LOUVERED GRILLE	-	235-260	10x10	1,2,3
T-1	PRICE	STG	TRANSFER GRILLE	-	80-100	16x8	1,2,9

NOTES:
1. CONTRACTOR SHALL PROVIDE ALL NECESSARY DUCT TRANSITIONS AND MOUNTING HARDWARE AS REQUIRED. CONTRACTOR TO CONFIRM MOUNTING TYPE.
2. ARCHITECT TO VERIFY COLOR AND FINISH.
3. BASED ON 12x12 FACE SIZE.
4. BASED ON 24x24 FACE SIZE.
5. PROVIDE WITH LAY-IN PANEL WHERE REQUIRED.
6. PROVIDE WITH OBD.
7. PROVIDE WITH 4A CORE MODEL.
8. PROVIDE WITH RADIAL DAMPER FOR BALANCING.
9. BASED ON 0.75 SQ. FT. FREE AREA.

* - S-SUPPLY, R-RETURN, E-EXHAUST, T-TRANSFER
** - SIZE
*** - CFM

EXHAUST FAN SCHEDULE (BASED ON GREENHECK)

SYMBOL	MAKE	MODEL	TYPE	DRIVE	CFM	ESP (IN)	MOTOR DATA						UNIT WEIGHT (LBS.)	NOTES
							HP	RPM	MCA	FLA	MOP	VOLTAGE		
EF-1	GREENHECK	SQ-90-VG	IN-LINE	DIRECT	300	0.7	1/10	1725	2.0	1.4	15	115/1/60	65	1,2,3,4,5
EF-2	GREENHECK	SQ-90-VG	IN-LINE	DIRECT	300	0.7	1/10	1725	2.0	1.4	15	115/1/60	65	1,2,3,4,5
CEF-1	GREENHECK	SP-A50-90-VG	CEILING	DIRECT	85	0.7	-	887	-	0.3	15	115/1/60	20	1,2,3,5,6
CEF-2	GREENHECK	SP-A50-90-VG	CEILING	DIRECT	50	0.5	-	808	-	0.3	15	115/1/60	20	1,2,3,4,5

NOTES:
1. PROVIDE DISCONNECT. COORDINATE WITH E.C.
2. PROVIDE WITH VARI-GREEN EC MOTOR.
3. PROVIDE WITH BACKDRAFT DAMPER.
4. PROVIDE WITH ISOLATION KIT, ALL NECESSARY MOUNTING HARDWARE, AND PROGRAMMABLE TIME CLOCK (TAMPER PROOF).
5. PROVIDE WITH ALL DUCT TRANSITIONS AS REQUIRED.
6. PROVIDE WITH ISOLATION KIT, ALL NECESSARY MOUNTING HARDWARE, AND REVERSE-ACTING THERMOSTAT.

ELECTRIC HEATER SCHEDULE (BASED ON MARLEY)

SYMBOL	MODEL	AIRFLOW CFM	KW	MBH	ATR (°F)	ELECTRICAL DATA		NOTES
						AMPS	VOLTAGE	
ECL-1	QCH1202F	65	0.75	2.6	36.4	3.6	208/1/60	1,2,5
EUH-1	MUH0381-PRO-SSP	350	3.0	10.2	27.1	14.5	208/1/60	1,2,3,4
EUH-2	MUH0381-PRO-SSP	350	3.0	10.2	27.1	14.5	208/1/60	1,2,3,4
EUH-3	MUH0381-PRO-SSP	350	3.0	10.2	27.1	14.5	208/1/60	1,2,3,4
ECL-1	CDF548	300	3.0	10.2	31.4	14.2	208/1/60	1,2,6,7
ECL-2	CDF548	300	3.0	10.2	31.4	14.2	208/1/60	1,2,6,7

NOTES:
1. PROVIDE WITH DISCONNECT. REFER TO ELECTRICAL PLANS FOR RATINGS & COORDINATE WITH E.C.
2. CONTRACTOR SHALL FIELD CONVERT TO SCHEDULED KW AND VOLTAGE.
3. PROVIDE WITH SMARTSERIES PLUS THERMOSTAT WITH TAMPER-PROOF COVER.
4. PROVIDE WITH MOUNTING BRACKET KIT.
5. PROVIDE WITH SURFACE-MOUNTING KIT, TAMPER-PROOF COVER, AND WALL-MOUNTED THERMOSTAT.
6. PROVIDE WITH RECESSED-MOUNTING FRAME.
7. PROVIDE WITH SPACE-MOUNTED, TAMPERPROOF THERMOSTAT.

ARCHITECTS
Saccoccio & Associates, Inc.
1085 Park Avenue
Cranston, Rhode Island
02910
tel 401.942.7970
fax 401.942.7975

Consultant

ENGINEERING DESIGN SERVICES INCORPORATED
149 Middle Highway Barrington, Rhode Island 02806
Tel (401) 765-7439 Fax (401) 765-2964

Education Center, Animal Building, & Pavilion

ROGER WILLIAMS PARK ZOO
100 ELMWOOD AVENUE
PROVIDENCE, RI 02907

Revision Schedule	
Revision Number	Revision Date

Issued for Bid
08/19/2024

SHEET TITLE

MECHANICAL SCHEDULES

DRAWN BY:	MFM/AJV	JOB NUMBER:	18050
CHECKED BY:	WTM	DATE:	08/19/2024

M3.2

SHEET: OF:

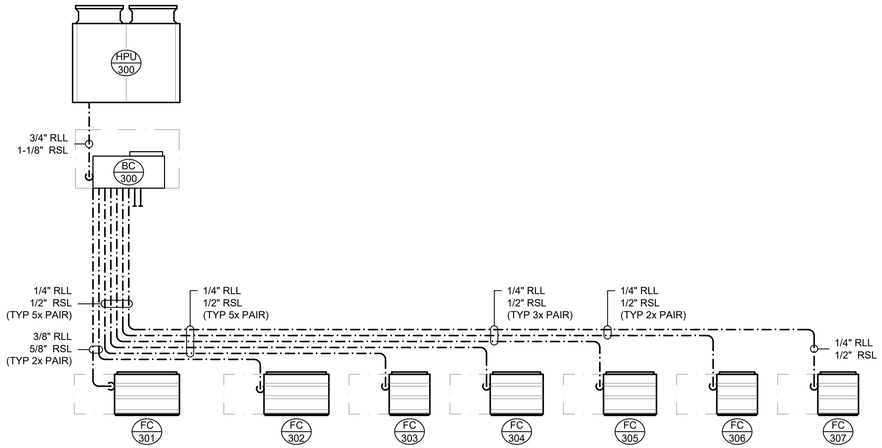

VRF PIPING RISER DIAGRAM - ANIMAL BUILDING (LOWER LEVEL)

NTS

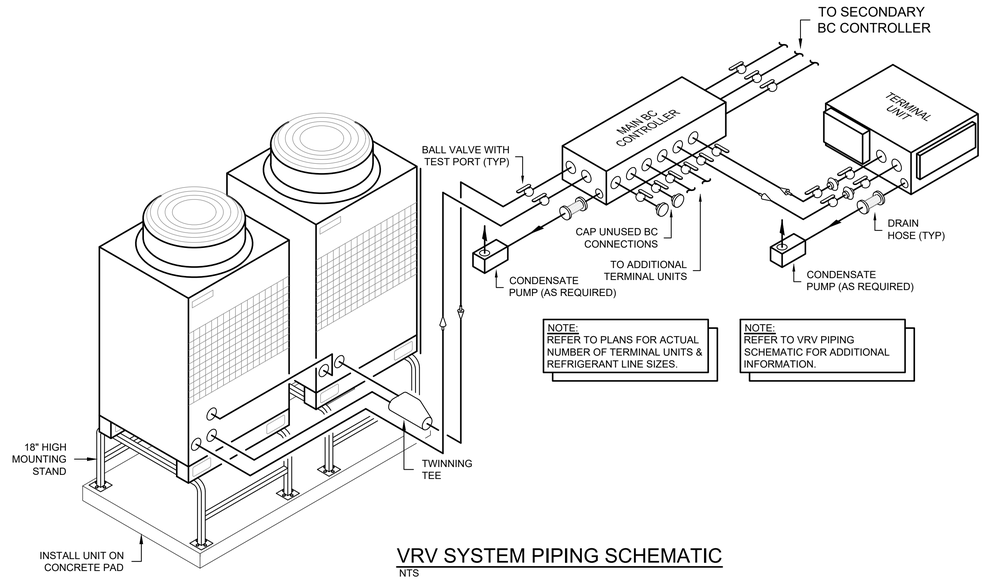

NOTE:
REFER TO PLANS FOR ACTUAL NUMBER OF TERMINAL UNITS & REFRIGERANT LINE SIZES.

NOTE:
REFER TO VRV PIPING SCHEMATIC FOR ADDITIONAL INFORMATION.

VRV SYSTEM PIPING SCHEMATIC

NTS

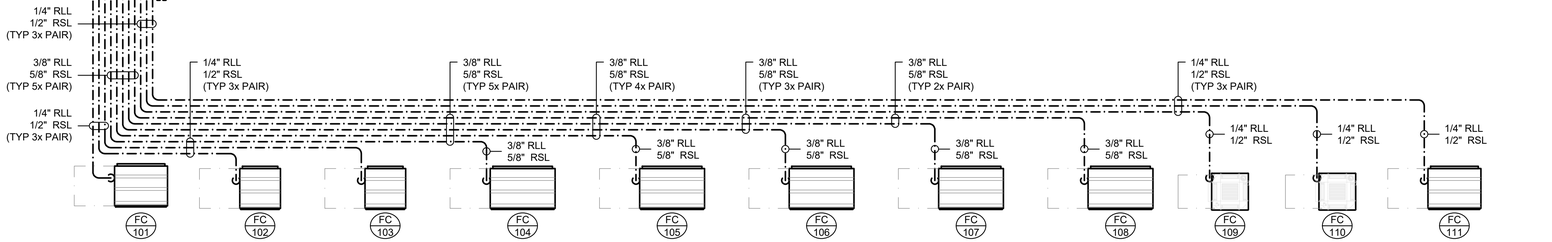

VRF PIPING RISER DIAGRAM - EDUCATION CENTER (UPPER LEVEL)

NTS

NOTES FOR ALL VRV SYSTEMS:

1. PIPE SIZES ARE APPROXIMATE. REFER TO MANUFACTURER'S DESIGN DOCUMENTS FOR FINAL PIPING SIZES.
2. ALL PIPING AND ACCESSORIES SHALL BE INSTALLED IN STRICT COMPLIANCE WITH THE MANUFACTURER'S INSTALLATION INSTRUCTIONS.
3. CONTRACTOR SHALL FIELD COORDINATE ACTUAL LINE SET LENGTHS WITH MANUFACTURER PRIOR TO INSTALLATION.
4. CONTRACTOR SHALL BE CERTIFIED TO PROVIDE FACTORY STARTUP AND SUPERVISION TO INSTALL VRF SYSTEMS BY THE SYSTEM MANUFACTURER.

VRF PIPING RISER DIAGRAM - EDUCATION CENTER (LOWER LEVEL)

NTS

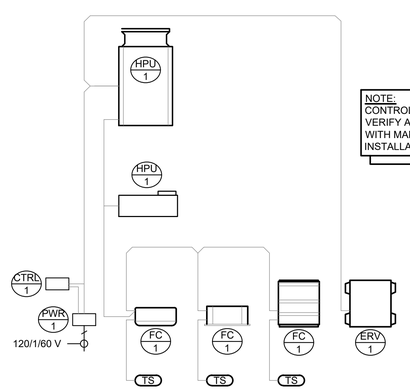

NOTE:
CONTROLS CONTRACTOR SHALL VERIFY ALL WIRING REQUIREMENTS WITH MANUFACTURER PRIOR TO INSTALLATION.

TYPICAL VRF CONTROLS RISER DIAGRAM

NTS

ARCHITECTS

Saccoccio & Associates, Inc.
1085 Park Avenue
Cranston, Rhode Island
02910
tel 401.942.7970
fax 401.942.7975

Consultant

ENGINEERING DESIGN SERVICES INCORPORATED
141 Harrison Avenue, Suite 2C, Rumford, RI 02916
Tel (401) 765-7439 Fax (401) 765-2964

Education Center, Animal Building, & Pavilion

ROGER WILLIAMS PARK ZOO
100 ELMWOOD AVENUE
PROVIDENCE, RI 02907

Revision Schedule	
Revision Number	Revision Date

Issued for Bid
08/19/2024

SHEET TITLE

MECHANICAL DETAILS

DRAWN BY:	MFM/AJV	JOB NUMBER:	18050
CHECKED BY:	WTM	DATE:	08/19/2024

M4.1

SHEET: OF:

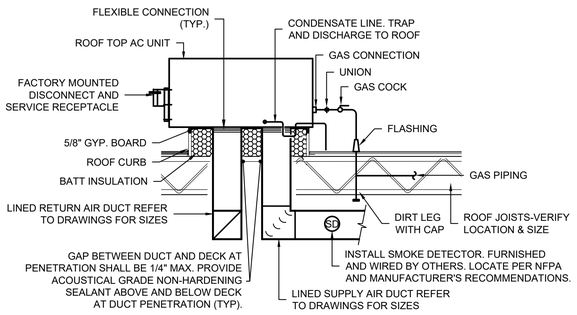

NOTE:
1. INSTALLATION TO BE PER APPROVED ROOFING SYSTEM MANUFACTURER'S REQUIREMENTS.

2. ANY UNITS INSTALLED WITHIN 10 FEET OF A ROOF EDGE. PROVIDE GUARD NOT LESS THAN 30" BEYOND EACH UNIT END. TOP OF GUARD SHALL BE LOCATED NOT LESS THAN 42" ABOVE THE SURFACE. GUARD TO BE FABRICATED & SUPPORTED PER BUILDING CODE. TYPICAL FOR ALL NEW AND EXISTING EQUIPMENT.

3. ALL NEW EQUIPMENT BEING INSTALLED SHALL BE COORDINATED WITH STRUCTURAL ENGINEER AND ARCHITECT.

4. ROOFTOP UNITS SHALL BE SET UPON THE FACTORY ROOFCURB WITH GASKET. STAINLESS STEEL FASTENERS SHALL BE INSTALLED THROUGH THE ROOFTOP UNIT CURB RAIL INTO THE FACTORY ROOFCURB NAILING STRIP AT 12" INTERVALS. ALTERNATIVELY, FACTORY RESTRAINT BRACKETS OR DIRECT BOLTING MAY BE EMPLOYED.

ROOFTOP UNIT DETAIL
NTS

NOTE:
ACTUAL PIPING ACCESSORIES AND ARRANGEMENT MAY VARY ACCORDING TO MANUFACTURER AND SYSTEM TYPE.
FINAL CONFIGURATION SHALL BE VERIFIED WITH MANUFACTURER INSTALLATION INSTRUCTIONS PRIOR TO BID AND INSTALLATION.

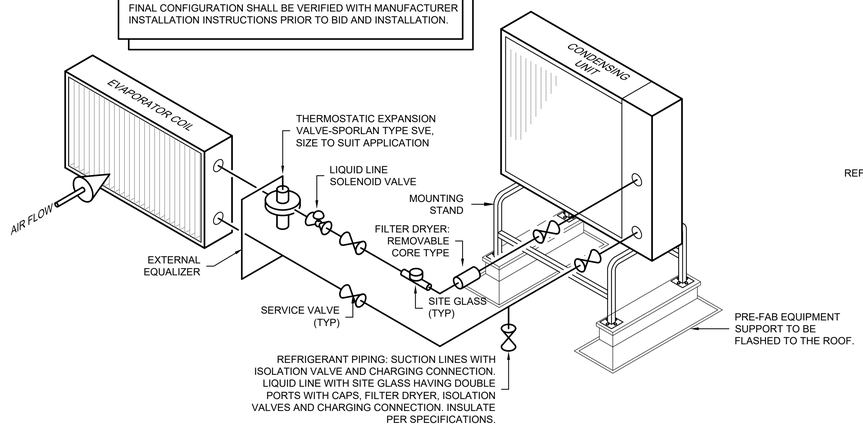

REFRIGERANT PIPING DIAGRAM
NO SCALE

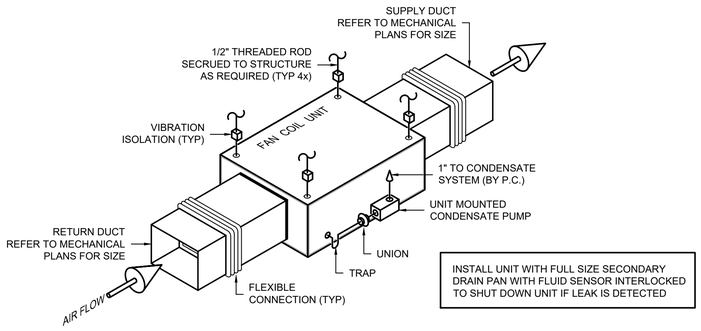

INSTALL UNIT WITH FULL SIZE SECONDARY DRAIN PAN WITH FLUID SENSOR INTERLOCKED TO SHUT DOWN UNIT IF LEAK IS DETECTED

HANGING FAN COIL UNIT DETAIL
NO SCALE

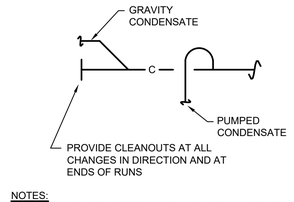

NOTES:
1. ALL BRANCH CONNECTIONS TO MAINS SHALL BE AT 45 DEGREES.
2. GATHER & RUN ALL CONDENSATE TO TANK ROOM. PROVIDE 120V CONDENSATE PUMPS & ELECTRICAL CIRCUITING AS NEEDED.

CONDENSATE PIPING DETAIL
NO SCALE

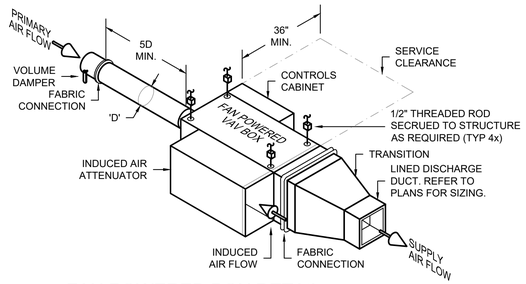

FAN POWERED BOX DETAIL
NTS

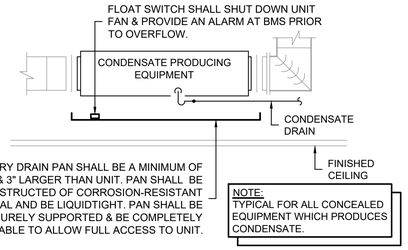

DRAIN PAN WITH FLOAT SWITCH DETAIL
NTS

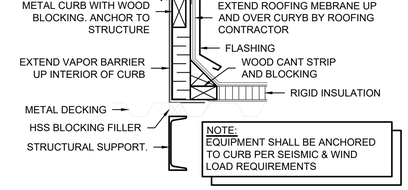

NOTE:
EQUIPMENT SHALL BE ANCHORED TO CURB PER SEISMIC & WIND LOAD REQUIREMENTS

ROOF CURB INSTALLATION DETAIL
NTS

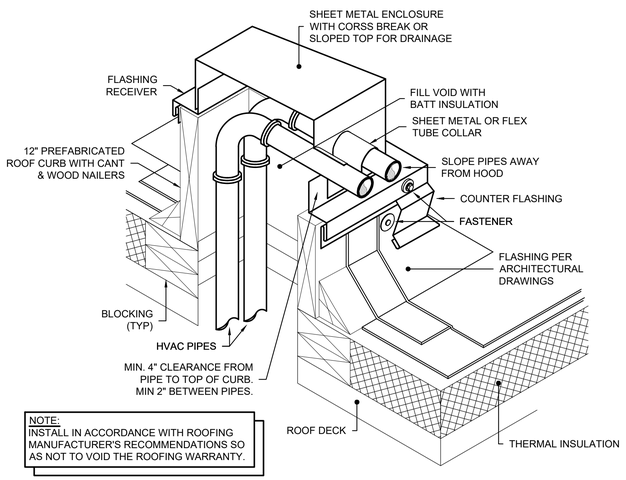

NOTE:
INSTALL IN ACCORDANCE WITH ROOFING MANUFACTURER'S RECOMMENDATIONS SO AS NOT TO VOID THE ROOFING WARRANTY.

MULTIPLE PIPES THRU ROOF DETAIL
NTS

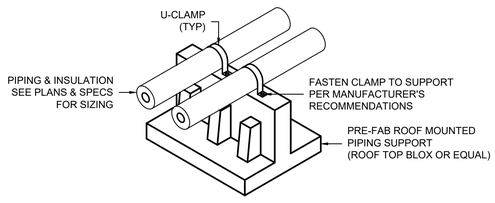

ROOF MOUNTED PIPING SUPPORT DETAIL
NTS

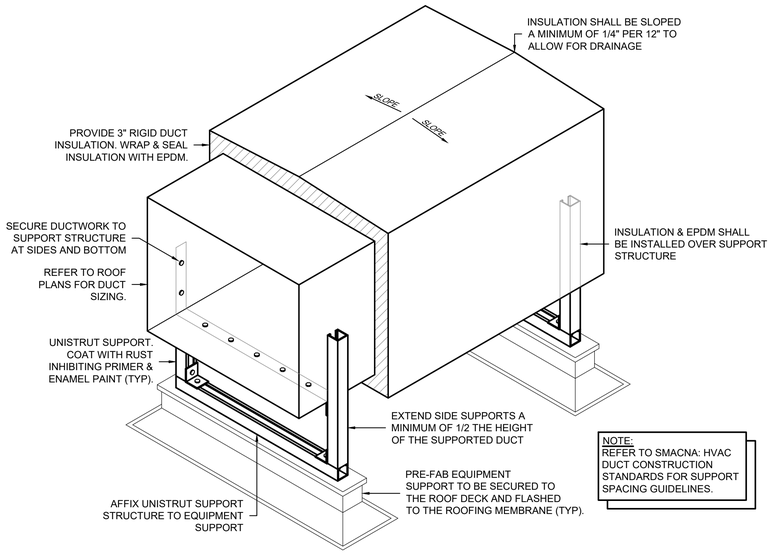

NOTE:
REFER TO SMACNA: HVAC DUCT CONSTRUCTION STANDARDS FOR SUPPORT SPACING GUIDELINES.

EXTERIOR DUCTWORK DETAIL
SCALE: NONE

ARCHITECTS
Saccoccio & Associates, Inc.
1085 Park Avenue
Cranston, Rhode Island
02910
tel 401.942.7970
fax 401.942.7975

Consultant

ENGINEERING design SERVICES INCORPORATED
149 Pennsylvania Avenue, Warwick, RI 02889
Tel (401) 765-7500 Fax (401) 765-2964

Education Center, Animal Building, & Pavilion

ROGER WILLIAMS PARK ZOO
100 ELMWOOD AVENUE
PROVIDENCE, RI 02907

Revision Schedule	
Revision Number	Revision Date

Issued for Bid
08/19/2024

SHEET TITLE

MECHANICAL DETAILS

DRAWN BY:	MFM/AJV	JOB NUMBER:	18050
CHECKED BY:	WTM	DATE:	08/19/2024

M4.2

SHEET: OF:

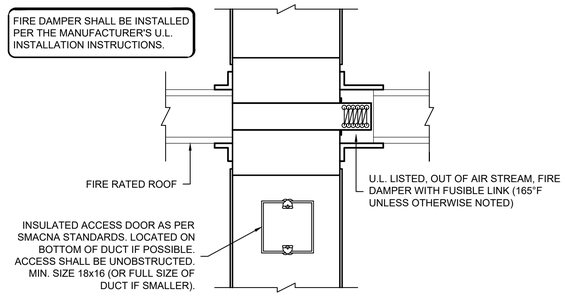

FIRE DAMPER SUBMITTAL SHALL INCLUDE THE FOLLOWING:

1. PRODUCT DATA.
2. U.L. INSTALLATION INSTRUCTIONS.
3. INSTALLATION DETAILS SPECIFIC TO PROJECT CONDITIONS.

A COPY OF THE SUBMITTAL SHALL BE KEPT AT THE JOBSITE AND DISTRIBUTED TO PERTINENT SUBCONTRACTORS, INCLUDING, BUT NOT LIMITED TO DRYWALL AND MASONRY CONTRACTORS.

FIRE DAMPER DETAIL
NTS

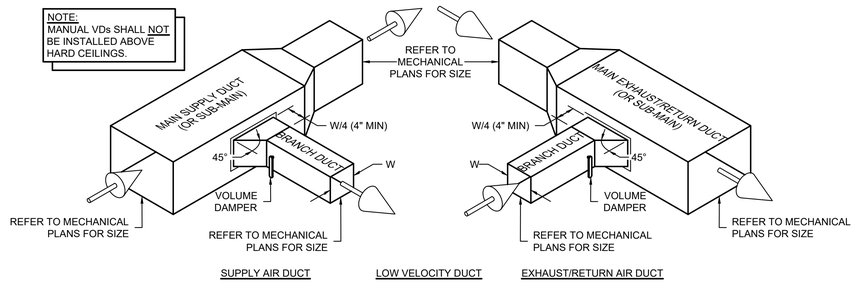

BRANCH DUCT CONNECTIONS
NTS

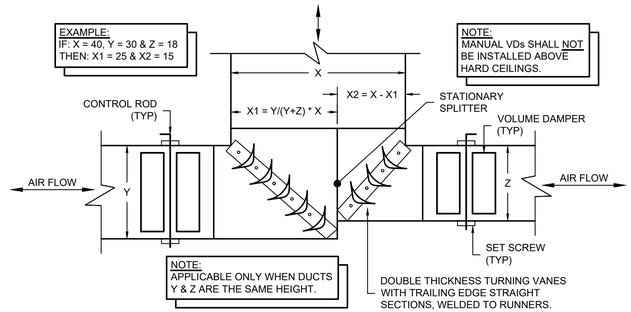

ASYMMETRICAL TEE CONNECTION
NO SCALE

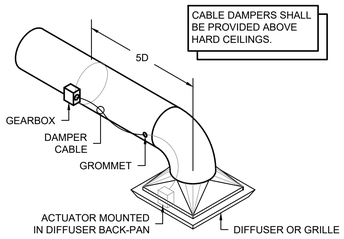

CABLE DAMPER INSTALLATION DETAIL
NTS

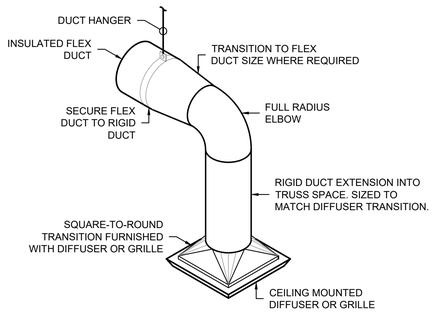

DIFFUSER CONNECTION DETAIL
NTS

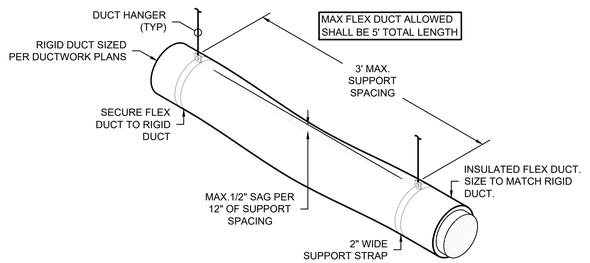

FLEX DUCT SUPPORT DETAIL
NTS

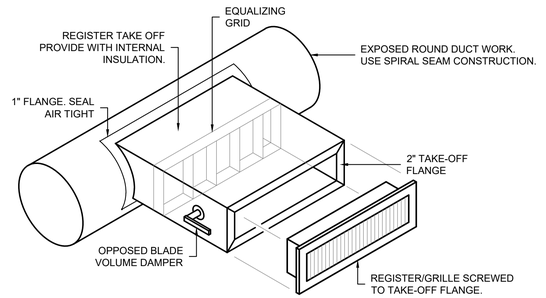

EXPOSED DUCT REGISTER CONNECTION
NTS

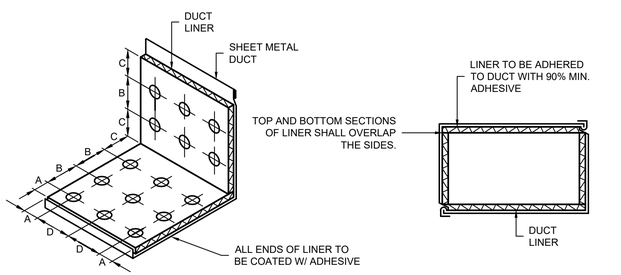

NOTES:

1. METAL FASTENERS SHALL BE OMARK INSUL-PINS DURO DYNE FASTENERS OR GRIP NAILS
2. GRIP NAILS SHALL BE INSTALLED BY "GRIPNAIL AIR HAMMER" OR BY AUTOMATIC FASTENER EQUIPMENT
3. ENDS OF LINER SHALL BE BUTTED FIRMLY TOGETHER
4. SEE "DUCT LINER NOSING DETAIL"

VELOCITY	DIMENSIONS			
	A	B	C	D
0-2500 FPM	3"	12"	4"	18"
2501-6000 FPM	3"	6"	4"	16"

DUCT LINER DETAIL
NTS

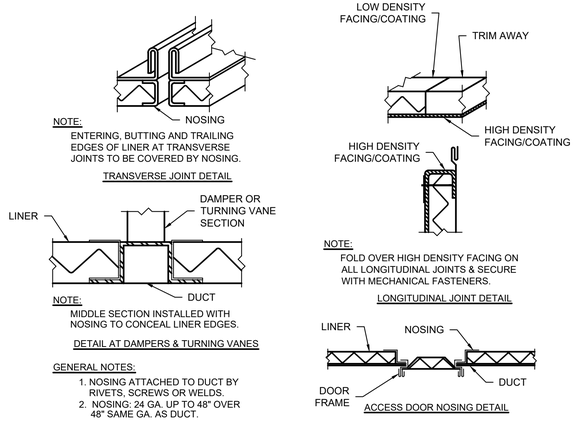

DUCT LINER NOSING DETAIL
NTS

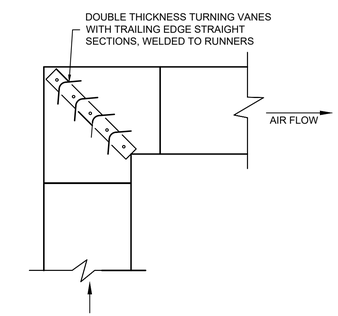

TYPICAL SQUARE ELBOW
NTS

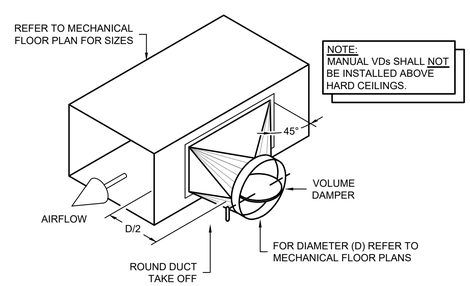

ROUND DUCT TAKE OFF DETAIL
NTS

ARCHITECTS

Saccoccio & Associates, Inc.
1085 Park Avenue
Cranston, Rhode Island
02910
tel 401.942.7970
fax 401.942.7975

Consultant

ENGINEERING DESIGN SERVICES INCORPORATED
141 Kingstown Road, Suite 301 Wakefield, RI 02879
Tel (401) 783-7439 Fax (401) 783-2964

Education Center, Animal Building, & Pavilion

ROGER WILLIAMS PARK ZOO
100 ELMWOOD AVENUE
PROVIDENCE, RI 02907

Revision Schedule	
Revision Number	Revision Date

Issued for Bid
08/19/2024

SHEET TITLE

MECHANICAL DETAILS

DRAWN BY: MFM/AJV	JOB NUMBER: 18050
CHECKED BY: WTM	DATE: 08/19/2024

M4.3

SHEET: OF:

PLUMBING GENERAL NOTES

1. BIDDERS SHALL UTILIZE A COMPLETE SET OF PLUMBING BIDDING DOCUMENTS IN PREPARING OF BID INCLUDING DRAWINGS AND SPECIFICATIONS, THE ENGINEER ASSUMES NO RESPONSIBILITY FOR ERRORS OR MISINTERPRETATIONS RESULTING FROM THE USE OF INCOMPLETE SETS OF PLUMBING BIDDING DOCUMENTS.

   THESE PLUMBING BIDDING DOCUMENTS SHALL INCLUDE:

   SPECIFICATION
   220000 PLUMBING SPECIFICATION

   DRAWINGS
   P0.0 PLUMBING LEGEND AND GENERAL NOTES
   A-P1.0A PLUMBING EDUCATION BUILDING UNDERSLAB PART PLAN A
   A-P1.0B PLUMBING EDUCATION BUILDING UNDERSLAB PART PLAN B
   A-P1.1A PLUMBING EDUCATION BUILDING LOWER LEVEL PART PLAN A
   A-P1.1B PLUMBING EDUCATION BUILDING LOWER LEVEL PART PLAN B
   A-P1.2 PLUMBING EDUCATION BUILDING UPPER LEVEL FLOOR PLAN
   A-P1.3 PLUMBING EDUCATION BUILDING ROOF PLAN
   B-P1.0 PLUMBING PAVILION UNDERSLAB PLAN
   B-P1.1 PLUMBING PAVILION PART PLANS NOTES & SCHEDULES

2. THE WORK COVERED CONSISTS OF FURNISHING ALL LABOR AND MATERIALS NECESSARY TO INSTALL, COMPLETE AND READY FOR CONTINUOUS OPERATION, THE PLUMBING SYSTEMS, APPARATUS AND EQUIPMENT FOR THIS PROJECT.

3. ALL EQUIPMENT AND MATERIALS FURNISHED UNDER THE PLUMBING SUB-CONTRACT, LABOR AND TESTING PERFORMED HEREIN SHALL BE IN COMPLETE ACCORDANCE WITH THE STATE BUILDING CODE, LOCAL FUEL GAS AND PLUMBING CODES, ALL LOCAL CODES AND REGULATIONS, NATIONAL FIRE PROTECTION ASSOCIATION, INSURANCE REGULATIONS AND REQUIREMENTS GOVERNING SUCH WORK.

4. ANY AND ALL PERMITS REQUIRED FOR INSTALLATION OF ANY MATERIAL SHALL BE OBTAINED AS PART OF THE WORK OF THE SPECIFICATION INCLUDING ALL FEES OR EXPENSES INCURRED.

5. REFER TO A.HITECTURAL PLANS FOR EXACT LOCATION OF ALL PLUMBING FIXTURES AND EQUIPMENT.

6. WHERE WATER PIPING IS SHOWN DROPPING INTO PLUMBING CHASES WITH SIZES NOTED, THAT SIZE SHALL BE CARRIED FULL LENGTH THROUGH THE CHASE.

7. SHOCK ABSORBERS SHALL BE EXTENDED VERTICALLY WITHIN CHASE TO ABOVE FINISHED CEILING. SHUTOFF VALVES SHALL BE INSTALLED DIRECTLY BEFORE THE DEVICE TO ENABLE THE REPLACEMENT WITHOUT HAVING TO SHUT DOWN THE ENTIRE BRANCH OR MAIN.

8. MISCELLANEOUS DISCREPANCIES OR OMISSIONS WHICH MIGHT APPEAR ON THE PLANS OR SPECIFICATIONS WILL NOT RELIEVE THE PLUMBING SUB-CONTRACTOR OF CODE COMPLIANCE.

PLUMBING GROUNDWATER DRAINAGE NOTES:

1. PROVIDE A COMPLETE UNDERSLAB WATER DRAINAGE SYSTEM PER GEOTECHNICAL REPORT.
2. PROVIDE A COMPLETE FOUNDATION PERIMETER WATER DRAINAGE SYSTEM PER GEOTECHNICAL REPORT.
3. REFER TO XXX" DRAWINGS.
4. DESIGN OF SYSTEM BY OTHERS.
5. INSTALLATION SHALL BE BY THIS PLUMBING CONTRACTOR.
6. TERMINATION OF SYSTEM SHALL DAYLIGHT TO POND. AN INTERIOR GROUND WATER PUMPING SYSTEM SHALL NOT BE REQUIRED.

PLUMBING PIPE MATERIAL SPECIFIC TO MECHANICAL ROOMS AND KITCHENS NOTES:

1. PIPING WASTE SYSTEMS SHALL BE IN ACCORDANCE WITHIN 2019 RHODE ISLAND PLUMBING CODE 702.5 TEMPERATURE RATING.
   WHERE THE WASTE WATER TEMPERATURE WILL BE GREATER THAN 140°F, THE SANITARY DRAINAGE PIPING MATERIAL SHALL BE RATED FOR THE HIGHEST TEMPERATURE OF THE WASTE WATER.

2. SCHEDULE 40 PVC PIPING MAXIMUM OPERATING TEMPERATURE SHALL NOT EXCEED 140°F INTENDED FOR USE IN NON-PRESSURE APPLICATIONS.

3. ALL MECHANICAL ROOM WASTE PIPING MATERIAL SHALL BE CAST IRON PIPE AND FITTINGS IN ITS ENTIRETY WITH NO EXCEPTIONS. SUBSTITUTION OF MATERIAL WILL NOT BE ALLOWED BY THE ENGINEER INCLUDING ANY VALUE ENGINEERING PERFORMED BY THE GENERAL CONTRACTOR, PLUMBING CONTRACTOR AND OWNER.

4. ALL KITCHEN WASTE PIPING MATERIAL SHALL BE CAST IRON PIPE AND FITTINGS IN ITS ENTIRETY WITH NO EXCEPTIONS. SUBSTITUTION OF MATERIAL WILL NOT BE ALLOWED BY THE ENGINEER INCLUDING ANY VALUE ENGINEERING PERFORMED BY THE GENERAL CONTRACTOR, PLUMBING CONTRACTOR AND OWNER.

PLUMBING PVC AND CPVC PIPE FIRE RATED PENETRATIONS NOTES

1. FLOOR PENETRATION SHALL BE PROVIDED WITH A UL LISTED FIRESTOP DEVICE.
   EVERY PIPE AND PLUMBING FIXTURE SHALL BE INCLUDED BUT NOT LIMITED TO THE FOLLOWING:
   WATER RISERS, SANITARY STACKS, WASTE STACKS, VENT STACK, RAIN LEADER STACKS, LAUNDRY WASTE STACKS, INDIRECT WASTE STACKS, WATER CLOSETS, SINK AND LAVATORY WASTE PIPES, BATHTUBS, SHOWER DRAINS, FLOOR DRAINS AND ROOF DRAINS.

2. SYSTEMS WHICH REQUIRE PIPE INSULATION SHALL BE PROVIDED WITH BOTH INSULATION AND FIRE WRAP.

PLUMBING HOT WATER PIPING DISTRIBUTION NOTES:

1. EACH HOT WATER PIPING SYSTEM DESIGNED IN ACCORDANCE WITH
   2018 INTERNATIONAL ENERGY CONSERVATION CODE C404.5.1 AND TABLE C404.5.1.

2. BRANCH PIPING SHALL BE A CONTINUOUS LOOP SYSTEM WITH A MAXIMUM ALLOWABLE PIPING LENGTH FROM THE NEAREST SOUSE OF HEATED HOT WATER TO THE TERMINATION OF THE FIXTURE SUPPLY PIPE.

   MAXIMUM PIPING LENGTHS SERVING PUBLIC LAVATORY FAUCETS
   1/2" PIPE = 2'-0"
   3/4" PIPE = 6"
   1" PIPE = 6"
   1 1/4" PIPE = 6"
   1 1/2" PIPE = 6"
   2" PIPE = 6"

   MAXIMUM PIPING LENGTHS SERVING OTHER FIXTURES AND APPLIANCES
   1/2" PIPE = 43'-0"
   3/4" PIPE = 21'-0"
   1" PIPE = 13'-0"
   1 1/4" PIPE = 8'-0"
   1 1/2" PIPE = 6'-0"
   2" PIPE = 4'-0"

PLUMBING LEGEND

PIPING

SYMBOL	ABBREVIATION	DESCRIPTION
		NEW WORK (ABOVE GROUND) (PERTAINS TO ALL SYSTEM)
		NEW WORK (BELOW GROUND) (PERTAINS TO ALL SYSTEM)
	CW	COLD WATER
ESPPD	ESPPD	ELEVATOR SUMP PUMP PRESSURE DISCHARGE
	HW	HOT WATER 120°F
	HWC	HOT WATER RECI.ULATION
140	140HW	HOT WATER 140°F
IW	IW	INDIRECT WASTE
KW	KW	KITCHEN WASTE
NPCW	NPCW	NON-POTABLE COLD WATER
NPHW	NPHW	NON-POTABLE HOT WATER WITH TEMPERATURE MAINTENANCE CABLE
	RL	RAIN LEADER (PRIMARY)
SRL	SRL	RAIN LEADER (SECONDARY OVERFLOW)
	S or W	SOIL OR WASTE
SWS	SWS	SOLAR WATER SUPPLY
SWR	SWR	SOLAR WATER RETURN
SW	SW	SPECIAL WASTE (SERVES ANIMAL HABITAT AREA - NONCORROSIVE)
	V	VENT

VALVES

SYMBOL	ABBREVIATION	DESCRIPTION
	BV	BALANCING VALVE
		BALANCING VALVE ASSEMBLY
	CV	CHECK VALVE
	DV-A	DRAIN VALVE TYPE WITH HOSE THREADS
	HB-A	HOSE BIBB TYPE WITH HOSE THREADS
		HOT WATER CI.ULATION FLOW SPLITTER
	PRV	PRESSURE REDUCING VALVE
		SHUTOFF VALVE
	SV	SOLENOID VALVE
	VIV	VALVE IN VERTICAL

GENERAL

SYMBOL	ABBREVIATION	DESCRIPTION
	CI	CAST IRON PIPE AND FITTINGS
	CO	CLEANOUT
	FCO	CLEANOUT (FLUSH FLOOR)
	CU	COPPER PIPE AND FITTINGS
	FD-A	DRAIN (FLOOR DRAIN & TYPE)
	FS-A	DRAIN (FLOOR SINK & TYPE)
	TD-A	DRAIN (TRENCH DRAIN & TYPE)
	DN	DOWN (PENETRATES LEVEL BELOW)
		DROP (DOES NOT PENETRATE LEVEL BELOW)
	FFE	FINISHED FLOOR ELEVATION
	FGE	FINISHED GRADE ELEVATION
	P-1	FIXTURE DESIGNATION
	FAI	FRESH AIR INTAKE
		INDICATES DIRECTION OF FLOW
		INDICATES DIRECTION OF SLOPE DOWN
	INV	INVERT ELEVATION
		PIPE ANCHOR
	PVC	PVC SCHEDULE 40 SOLID WALL PIPE AND FITTINGS
		RISE (DOES NOT PENETRATE LEVEL ABOVE)
	SA	SHOCK ABSORBER
		SLEEVE
	S=.01	SLOPE = 1/8" PER FOOT - 1%
	S=.02	SLOPE = 1/4" PER FOOT - 2%
	S=.04	SLOPE = 1/2" PER FOOT - 4%
	UP	UP (PENETRATES LEVEL ABOVE)
	VTR	VENT THROUGH ROOF
	WH	WALL HYDRANT
	WTS	WATER TIGHT SLEEVE
	W & T	WASTE & TRAP

ARCHITECTS

Saccoccio & Associates, Inc.
1085 Park Avenue
Cranston, Rhode Island
02910
tel 401.942.7970
fax 401.942.7975

Consultant

ENGINEERING DESIGN SERVICES INCORPORATED
149 Pennsylvania Avenue Warwick, RI 02879
Tel (401) 765-7499 Fax (401) 765-2964

Education Center, Animal Building, & Pavilion

ROGER WILLIAMS PARK ZOO
100 ELMWOOD AVENUE
PROVIDENCE, RI 02907

Revision Schedule	
Revision Number	Revision Date

Issued for Bid
08/19/2024

SHEET TITLE

PLUMBING LEGEND, AND GENERAL NOTES,

DRAWN BY:	GGM	JOB NUMBER:	18050
CHECKED BY:	GGM	DATE:	08/19/2024

P0.0

SHEET: OF:

FIRE PROTECTION DESIGN NOTES

1. APPLICABLE LAWS, REGULATIONS AND STANDARDS
   ALL MATERIAL AND WORK PROVIDED SHALL BY IN ACCORDANCE WITH THE FOLLOWING CODES AND STANDARDS:
   1. LOCAL WATER DEPARTMENT
   2. STATE BUILDING AND FIRE CODE
   3. AUTHORITY HAVING JURISDICTION
   4. 2013 NFPA 13 - INSTALLATION OF SPRINKLER SYSTEMS & ALL REFERENCED DOCUMENTS NOTED IN CHAPTER 10.
   5. NFPA 25 - INSPECTION, TESTING AND MAINTENANCE OF WATER BASED FIRE PROTECTION SYSTEMS.
   6. OWNER'S INSURANCE COMPANY
   7. STANDARDS OF THE UNDERWRITER'S LABORATORIES (UL)

2. DESIGN RESPONSIBILITY FOR SPRINKLER SYSTEM
   ENGINEERING DESIGN SERVICES, INC. PROVIDES A PERFORMANCE-BASED DESIGN AND SPECIFIES THE DESIGN CRITERIA TO BE USED BY THE INSTALLING CONTRACTOR WHO FINALIZES THE SYSTEM LAYOUT AND PROVIDES HYDRAULIC CALCULATIONS TO CONFIRM DESIGN CRITERIA. THE WORKING PLANS AND HYDRAULIC CALCULATIONS SHALL BE SIGNED AND SEALED BY A PROFESSIONAL ENGINEER LICENSED TO PRACTICE FIRE PROTECTION IN THE STATE OF RHODE ISLAND AND SUBMITTED TO THE BUILDING DEPARTMENT AND LOCAL FIRE DEPARTMENT FOR FINAL REVIEW AND APPROVAL. THE PROFESSIONAL ENGINEER IS CONSIDERED THE ENGINEER OF RECORD AND CERTIFIES SYSTEM INSTALLATION FOR CODE COMPLIANCE AT COMPLETION OF THE INSTALLATION.

3. SPRINKLER SYSTEM TO BE INSTALLED
   FURNISH AND INSTALL A COMPLETE AUTOMATIC SPRINKLER SYSTEM WITHIN THE RENOVATED AREAS OF THE BUILDING, HYDRAULICALLY DESIGNED ON A COMPUTER PROGRAM.

4. THE SPRINKLER SYSTEM SHALL BE HYDRAULICALLY DESIGNED IN ACCORDANCE WITH THE FOLLOWING DESIGN DENSITIES:
   LIGHT HAZARD OCCUPANCIES
   OFFICE AREAS, TOILET ROOMS, UNOCCUPIED ATTIC
   DESIGNED FOR .10 GPM OVER THE MOST REMOTE 1500 OR 1950 SQUARE FEET OR AS ALLOWED BY NFPA 13.
   ADDITIONAL 100 GALLON PER MINUTE FLOW FOR EXTERIOR FIRE HOSE FLOW
   MAXIMUM SPACING OF 225 SQUARE FEET PER SPRINKLER HEAD EXCEPT ATTIC (OR INDICATED).

   ORDINARY HAZARD OCCUPANCIES GROUP 1
   WORK ROOMS, MECHANICAL ROOMS
   DESIGNED FOR .15 GPM OVER THE MOST REMOTE 1500 SQUARE FEET OR AS REQUIRED BY NFPA 13.
   ADDITIONAL 250 GALLON PER MINUTE FLOW FOR EXTERIOR FIRE HOSE FLOW
   MAXIMUM SPACING OF 130 SQUARE FEET PER SPRINKLER HEAD UNLESS OTHERWISE NOTED OR INDICATED.

5. THE OCCURRENCE OF FIRE OR ANY OTHER SOURCE OF HEAT GENERATED IN A SUFFICIENT AMOUNT TO FUSE HEAT SENSITIVE ELEMENTS AT INDIVIDUAL FIRE SPRINKLERS OR A BREAK AT ANY POINT WITHIN THE FIRE SPRINKLER PIPING SYSTEM EQUAL TO THE WATER FLOW FROM ONE FIRE SPRINKLER WILL CAUSE THE BASE BUILDING MAIN ALARM CHECK VALVE ASSEMBLY WATER FLOW SWITCH TO ACTIVATE. WHEN ELECTRICAL CONTACTS WITHIN THE MAIN ALARM CHECK VALVE WATER FLOW SWITCHES ACTIVATE, AN ALARM SIGNAL IS SENT TO THE FIRE ALARM CONTROL PANEL CAUSING THE PANEL TO ACKNOWLEDGE AN ALARM CONDITION.

6. FINAL SYSTEM ACCEPTANCE REQUIREMENTS FOR THE FIRE SPRINKLER SYSTEM WILL BE AS REQUIRED BY NFPA 13 CHAPTER 16.

7. THE BUILDING FIRE SPRINKLER SYSTEM WILL BE HYDROSTATICALLY TESTED PER NFPA #13. ALL VALVE SUPERVISORY SWITCHES AND WATER FLOW INDICATORS WILL BE TESTED FOR PROPER OPERATION AND INTEGRATION IN TO THE BUILDING FIRE ALARM SYSTEM AS REQUIRED BY NFPA #72.

8. TESTING SHALL BE IN ACCORDANCE WITH STATE CODE AND BE WITNESSED BY THE LOCAL FIRE DEPARTMENT TO THEIR SPECIFICATIONS AND SATISFACTION.

9. INSTALL SPRINKLERS ABOVE CEILINGS WHERE REQUIRED BY THE STATE OF RHIDE ISLAND FIRE SAFETY CODE AND NFPA 13. THIS REQUIREMENT APPLIES TO ALL CONCEALED SPACES ABOVE CEILINGS THAT CONTAIN COMBUSTIBLE MATERIALS AS DEFINED BY NFPA 220. SPECIAL APPLICATION COMBUSTIBLE CONCEALED SPACE SPRINKLER TO BE INSTALLED WHEN REQUIRED SPECIAL APPLICATION COMBUSTIBLE CONCEALED SPACE SPRINKLER TO BE INSTALLED WHEN REQUIRED IN ACCORDANCE WITH NFPA 13.

FIRE PROTECTION SPECIFIC NOTES:

1. BIDDERS SHALL UTILIZE A COMPLETE SET OF FIRE PROTECTION BIDDING DOCUMENTS IN PREPARING OF BID INCLUDING DRAWINGS AND SPECIFICATIONS. THE ENGINEER ASSUMES NO RESPONSIBILITY FOR ERRORS OR MISINTERPRETATIONS RESULTING FROM THE USE OF INCOMPLETE SETS OF FIRE PROTECTION BIDDING DOCUMENTS.

   THE FIRE PROTECTION BIDDING DOCUMENTS SHALL INCLUDE:

   SPECIFICATION
   SEE PROJECT MANUAL

   DRAWINGS
   FP100.0 THROUGH FP104.7 (27 DRAWINGS)

2. THE WORK COVERED CONSISTS OF FURNISHING ALL LABOR AND MATERIALS NECESSARY TO INSTALL, COMPLETE AND READY FOR CONTINUOUS OPERATION, THE FIRE PROTECTION SYSTEMS, APPARATUS AND EQUIPMENT FOR THIS PROJECT.

3. ALL EQUIPMENT AND MATERIALS FURNISHED UNDER THE FIRE PROTECTION SUB-CONTRACT, LABOR AND TESTING PERFORMED HEREIN SHALL BE IN COMPLETE ACCORDANCE WITH THE STATE BUILDING CODE, ALL LOCAL CODES AND REGULATIONS, NATIONAL FIRE PROTECTION ASSOCIATION, INSURANCE REGULATIONS AND REQUIREMENTS GOVERNING SUCH WORK.

4. ANY AND ALL PERMITS REQUIRED FOR INSTALLATION OF ANY MATERIAL SHALL BE OBTAINED AS PART OF THE WORK OF THE SPECIFICATION INCLUDING ALL FEES OR EXPENSES INCURED.

5. IT IS THE INTENT OF THESE DOCUMENTS THAT THE RENOVATED AREA BE PROVIDED WITH 100% SPRINKLER COVERAGE PER NFPA 13.

6. SPRINKLERS LOCATED IN ELECTRICAL ROOMS SHALL BE REQUIRED UNLESS THE STANDARDS OF NFPA 8.15.10 ELECTRICAL EQUIPMENT HAS BEEN SATISFIED. PROVIDE SPRINKLER GUARDS PER NFPA 8.2.8.

7. CONTRACTOR SHALL PERFORM HYDRANT FLOW TEST TO DETERMINE PIPE SIZING. SIZES SHOWN ARE PRELIMINARY ONLY.

8. PROVIDE A COMPLETE HYDRAULICALLY CALCULATED SPRINKLER SYSTEM THROUGHOUT THE RENOVATED AREA. ALL WORK SHALL BE IN STRICT CONFORMANCE WITH NFPA 13 AND INCLUDING ALL RULES AND REGULATIONS OF THE LOCAL FIRE DEPARTMENT.

9. THE SPRINKLER CONTRACTOR SHALL PREPARE WORKING DRAWINGS OF THE SPRINKLER WORK AND OBTAIN APPROVALS FROM THE LOCAL FIRE DEPARTMENT PRIOR TO INSTALLATION.

10. ROUTING OF SPRINKLER MAINS, BRANCHES AND HEADS SHALL BE THOROUGHLY COORDINATED WITH OTHER FIRE PROTECTIONS AND BUILDING STRUCTURE PRIOR TO SUBMISSION OF COORDINATED SHOP DRAWINGS.

11. SPRINKLER HEAD FINISHES SHALL BE IN ACCORDANCE WITH THE FOLLOWING:

    SPRINKLER HEADS IN AREAS WITH NO FINISHED CEILING SHALL BE UPRIGHT TYPE LOCATED AS HIGH AS POSSIBLE

    SPRINKLER HEADS IN FINISHED AREAS SHALL BE WHITE PLATED PENDANT TYPE WITH ESCUTCHEON PLATE

12. MISCELLANEOUS DISCREPANCIES OR OMMISSIONS WHICH MIGHT APPEAR ON THE PLANS OR SPECIFICATIONS WILL NOT RELIEVE THE FIRE PROTECTION SUB-CONTRACTOR OF CODE COMPLIANCE.

12. SPRINKLER PROTECTION SHALL BE PROVIDED ABOVE ANY AND ALL CEILINGS INSTALLED BENEATH COMBUSTIBLE CONCEALED SPACES. WHEN REQUIRED, SPECIAL APPLICATION UPRIGHT SPRINKLERS SHALL BE INSTALLED IN ACCORDANCE WITH THEIR LISTING.

FIRE PROTECTION GENERAL NOTES

A. THE FIRE PROTECTION WORK COVERED HEREIN SHALL BE INSTALLED BY A LICENSED FIRE PROTECTION SUB-CONTRACTOR HIRED BY THE GENERAL CONTRACTOR TO PROVIDE ALL LABOR AND MATERIALS NECESSARY TO INSTALL, COMPLETE AND MAKE READY FOR CONTINUOUS OPERATION, THE FIRE PROTECTION SYSTEMS, APPARATUS AND EQUIPMENT FOR THIS PROJECT.

B. ALL EQUIPMENT AND MATERIALS FURNISHED UNDER THE FIRE PROTECTION CONTRACT, LABOR AND TESTING PERFORMED HEREIN SHALL BE IN COMPLETE ACCORDANCE WITH THE STATE BUILDING CODE, ALL LOCAL CODES AND REGULATIONS, NATIONAL FIRE PROTECTION ASSOCIATION, INSURANCE REGULATIONS AND REQUIREMENTS GOVERNING SUCH WORK.

C. ANY AND ALL PERMITS REQUIRED FOR INSTALLATION OF ANY MATERIAL SHALL BE OBTAINED AS PART OF THE WORK OF THE SPECIFICATION INCLUDING ALL FEES OR EXPENSES INCURED.

D. SHOP DRAWINGS: SHOP DRAWINGS OF ALL SPECIFIED HARDWARE AND APPARATUS SHALL BE SUBMITTED TO THE ARCHITECT FOR APPROVAL.

E. GUARANTEE: ALL MATERIALS AND EQUIPMENT FURNISHED AND INSTALLED UNDER THIS SPECIFICATION SHALL BE GUARANTEE IN WRITING FOR ONE (1) YEAR FROM THE DATE OF ACCEPTANCE OF THE BUILDING BY THE OWNER.

F. INSPECTION: ALL WORK SHALL BE SUBJECT TO THE INSPECTION OF THE OWNER, THE ARCHITECT AND SUCH OTHER INSPECTORS HAVING JURISDICTION. A PROPERLY EXECUTED CERTIFICATE OF INSPECTION SHALL BE PROVIDED.

G. EXAMINATION OF SITE: THE FIRE PROTECTION SUBCONTRACTOR, BEFORE SUBMITTING PRICES OR BEGINNING WORK, SHALL THOROUGHLY EXAMINE THE SITE AND CONTRACT DOCUMENTS. NO CLAIM FOR EXTRA COMPENSATION WILL BE RECOGNIZED IF DIFFICULTIES WHICH AN EXAMINATION OF SITE CONDITIONS AND CONTRACT DOCUMENTS PRIOR TO EXECUTING CONTRACT WOULD HAVE REVEALED.

H. COORDINATION: COORDINATE ALL WORK INSTALLED UNDER THIS SPECIFICATION WITH THAT OF ALL OTHER MECHANICAL TRADES.

I. PROTECTION OF PROPERTY: PROTECT ALL NEW AND EXISTING WORK BEFORE, DURING AND AFTER INSTALLATION.

J. CERTIFICATES OF APPROVAL: UPON COMPLETION OF ALL WORK, THE FIRE PROTECTION SUBCONTRACTOR SHALL FURNISH, IN DUPLICATE, CERTIFICATES OF INSPECTIONS FROM ALL INSPECTORS AND AUTHORITIES HAVING JURISDICTION.

K. ALL VALVES SHALL BE PROVIDED WITH A SUPERVISORY SWITCH.
   SUPERVISORY SWITCHES SHALL BE FURNISHED AND INSTALLED BY THE FIRE PROTECTION SUBCONTRACTOR AND WIRED BY THE ELECTRICAL CONTRACTOR. SUPERVISORY SWITCH SHALL BE POTTER ROEMER 6220 OR APPROVED EQUAL.

L. FLOW SWITCHES SHALL BE INSTALLED WHERE REQUIRED PER CODE.
   FLOW SWITCHES SHALL BE FURNISHED AND INSTALLED BY THE FIRE PROTECTION SUB CONTRACTOR AND WIRED BY THE ELECTRICAL CONTRACTOR. FLOW SWITCH SHALL BE POTTER ROEMER 6200 SERIES, RED, TAMPER-PROOF SWITCH HOUSINGS WITH FLOW PADDLE, ADJUSTABLE PNEUMATIC RETARD SETTING OR APPROVED EQUAL.

M. SEE STRUCTURAL DRAWINGS FOR INFORMATION REGARDING CORING THROUGH EXISTING STRUCTURE.

FIRE PROTECTION FLOW TEST NOTES:

FIRE PROTECTION CONTRACTOR SHALL MAKE PROVISIONS FOR OBTAINING UPDATED FLOW TEST AND PRESSURE INFORMATION FOR THIS PROJECT. FLOW TEST INFORMATION NOTED IN THESE CONTRACT DOCUMENTS ARE CONSIDERED PRELIMINARY. A NEW FLOW TEST SHALL BE REQUIRED AT THIS CONTRACTORS EXPENSE.

FLOW TEST DATA INDICATES THE FOLLOWING:
SEPTEMBER 15, 2022
70 PSI STATIC
30 PSI RESIDUAL
840 GPM

FIRE PROTECTION CONTRACTOR SHALL PERFORM A NEW FLOW TEST.
2016 NFPA 13 23.2.1.1 FLOW TEST DATA SHALL BE CONDUCTED NO MORE THAN 12 MONTHS PRIOR TO WORKING PLANS SUBMITTED.
FLOW TEST DATA SHALL INCLUDE:
1. LOCATION AND ELEVATION OF STATIC AND RESIDUAL TEST GAUGE WITH RELATION TO THE RISER REFERENCE POINT:
2. FLOW LOCATION:
3. STATIC PRESSURE:
4. RESIDUAL PRESSURE:
5. GPM FLOW:
6. DATE:
7. TIME:
8. NAME OF PERSON WHO CONDUCTED THE TEST OR SUPPLIED THE INFORMATION:

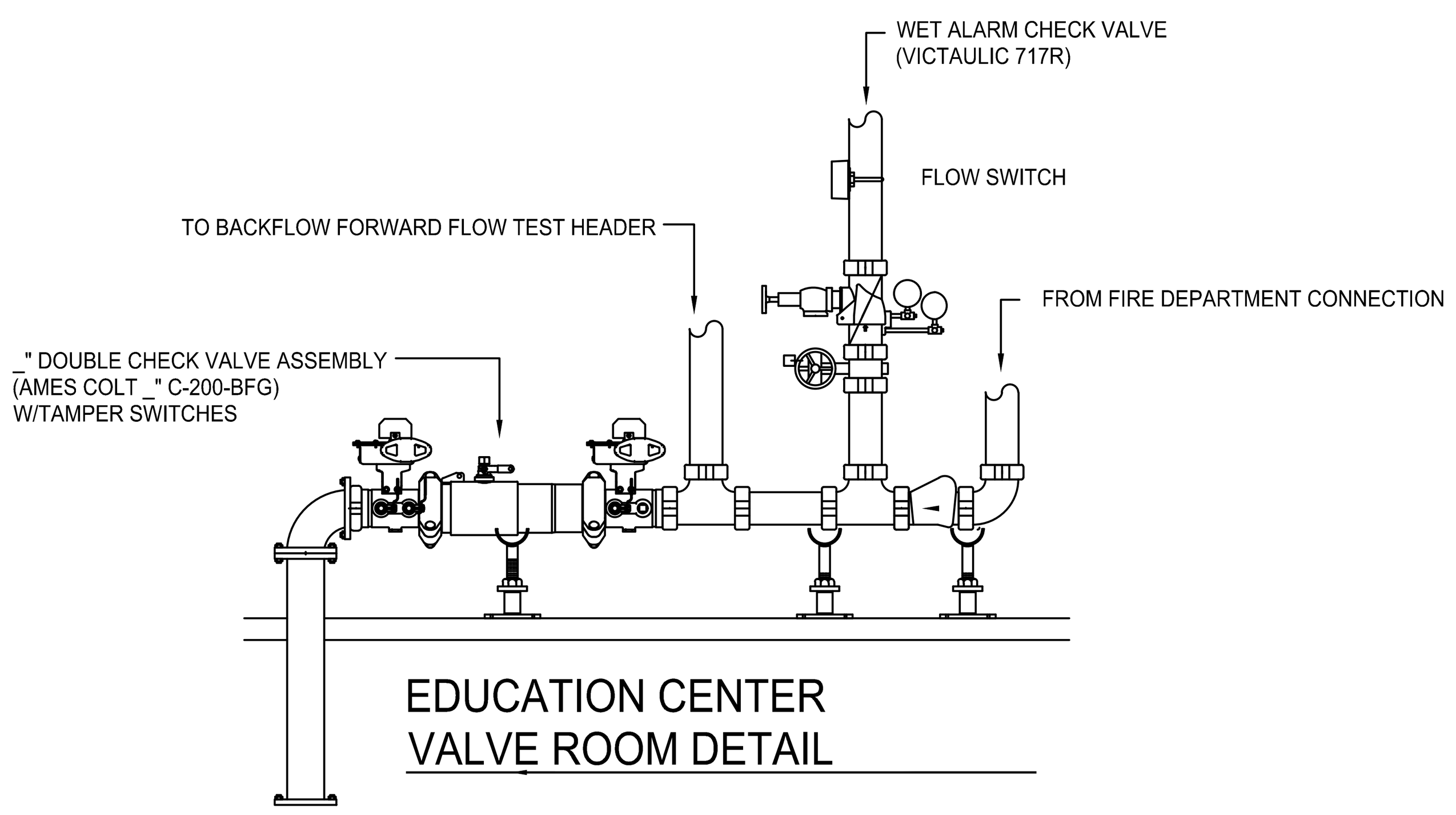

EDUCATION CENTER
VALVE ROOM DETAIL

DUCTILE IRON FIRE SPRINNKLER SERVICE

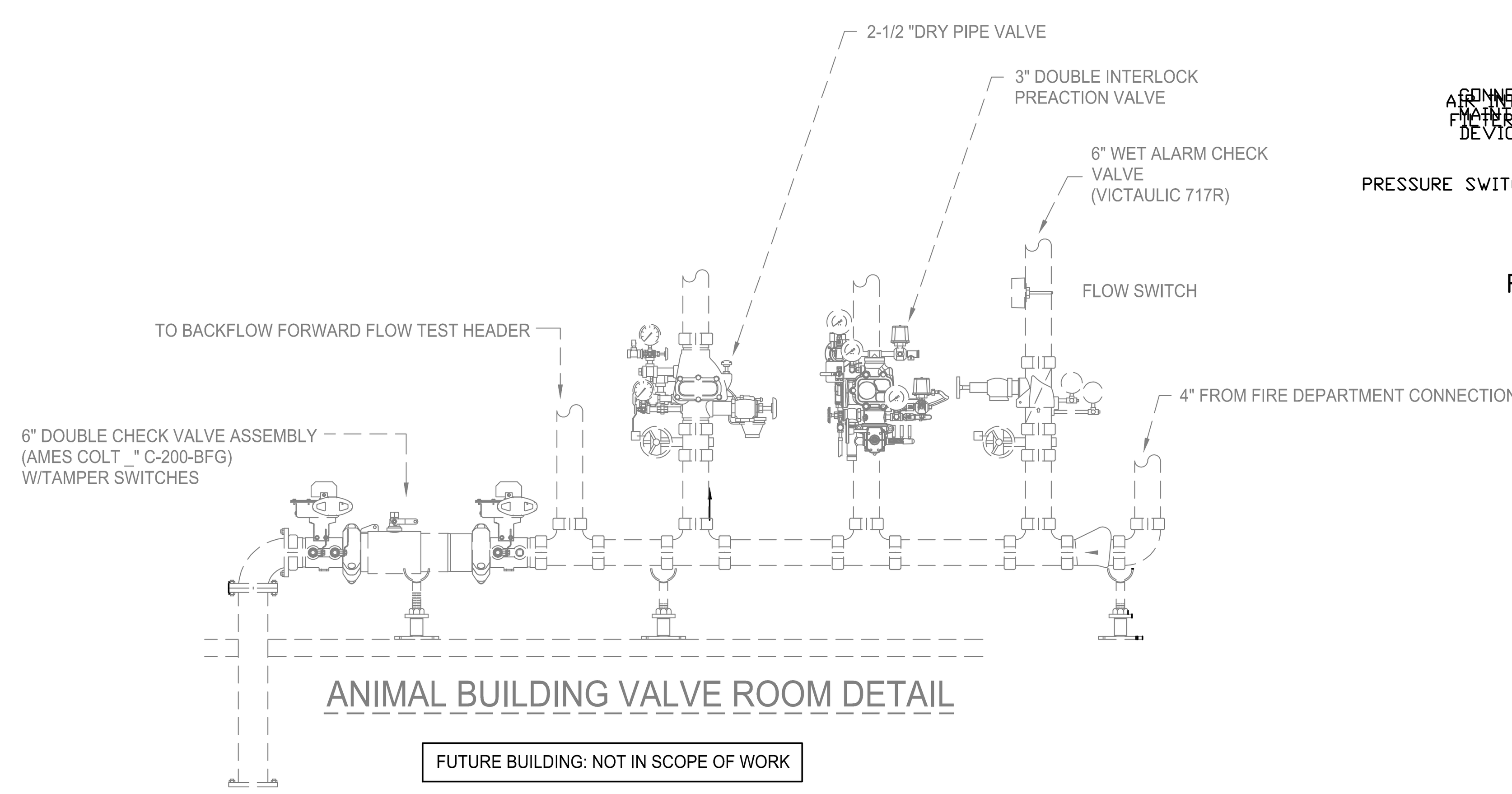

ANIMAL BUILDING VALVE ROOM DETAIL

FUTURE BUILDING: NOT IN SCOPE OF WORK

ALL SPRINKLER HEADS TO BE LOCATED AS REQUIRED TO AVOID OBSTRUCTION FROM BEAMS, WALLS, MECHANICAL EQUIPMENT, ETC.

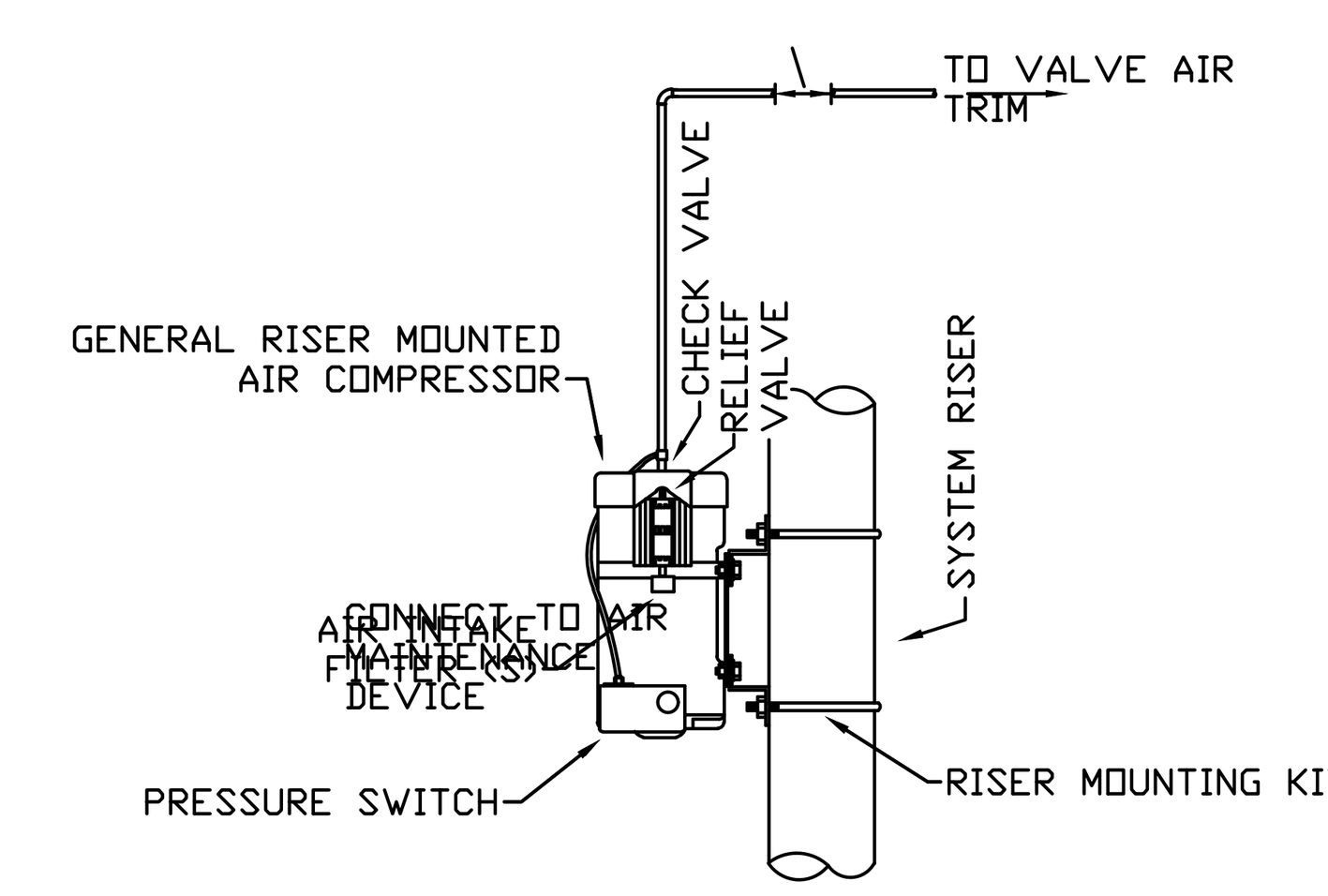

RISER MOUNTED AIR COMPRESSOR
DRY SYSTEM CAPCITY =

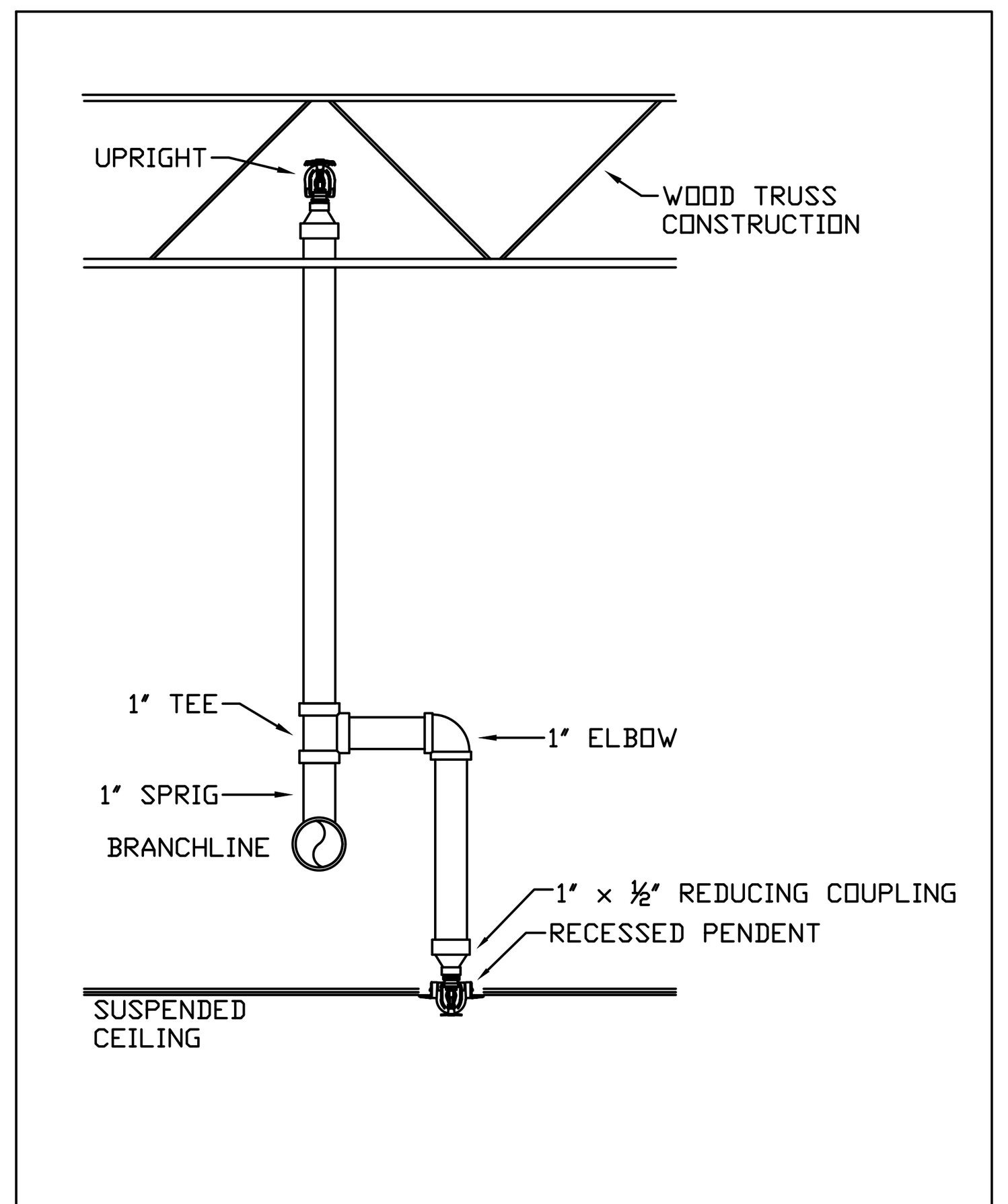

TYPICAL ABOVE/BELOW CEILING DETAIL

EDUCATION BUILDING - SPRINKLER HEAD LEGEND

SYM	SPRINKLER TYPE	FINISH	TEMP	K	NPT
○	QUICK RESPONSE UPRIGHT	BRASS	155	5.60	1/2"
A/B	QUICK RESPONSE UPRIGHT ABOVE CLG.	WHITE	155	5.60	1/2"
	QUICK RESPONSE PENDENT	BRASS	155	5.60	1/2"
●	QUICK RESPONSE PENDENT	WHITE	155	5.60	1/2"
◀	QUICK RESPONSE SIDEWALL	WHITE	155	5.60	1/2"
	QUICK RESPONSE DRY SIDEWALL	WHITE	155	5.60	1/2"

ANIMAL BUILDING - SPRINKLER HEAD LEGEND

SYM	SPRINKLER TYPE	FINISH	TEMP	K	NPT
⊗	QUICK RESPONSE UPRIGHT	BRASS	175	4.20	1/2"
◁	QUICK RESPONSE DRY SIDEWALL	WHITE	155	5.60	1/2"
A/B	QUICK RESPONSE UPRIGHT ABOVE CLG.	WHITE	155	5.60	1/2"
	QUICK RESPONSE PENDENT	BRASS	155	5.60	1/2"
	QUICK RESPONSE PENDENT	WHITE	155	5.60	1/2"
D	QUICK RESPONSE DRY PENDENT	WHITE	155	5.60	1"

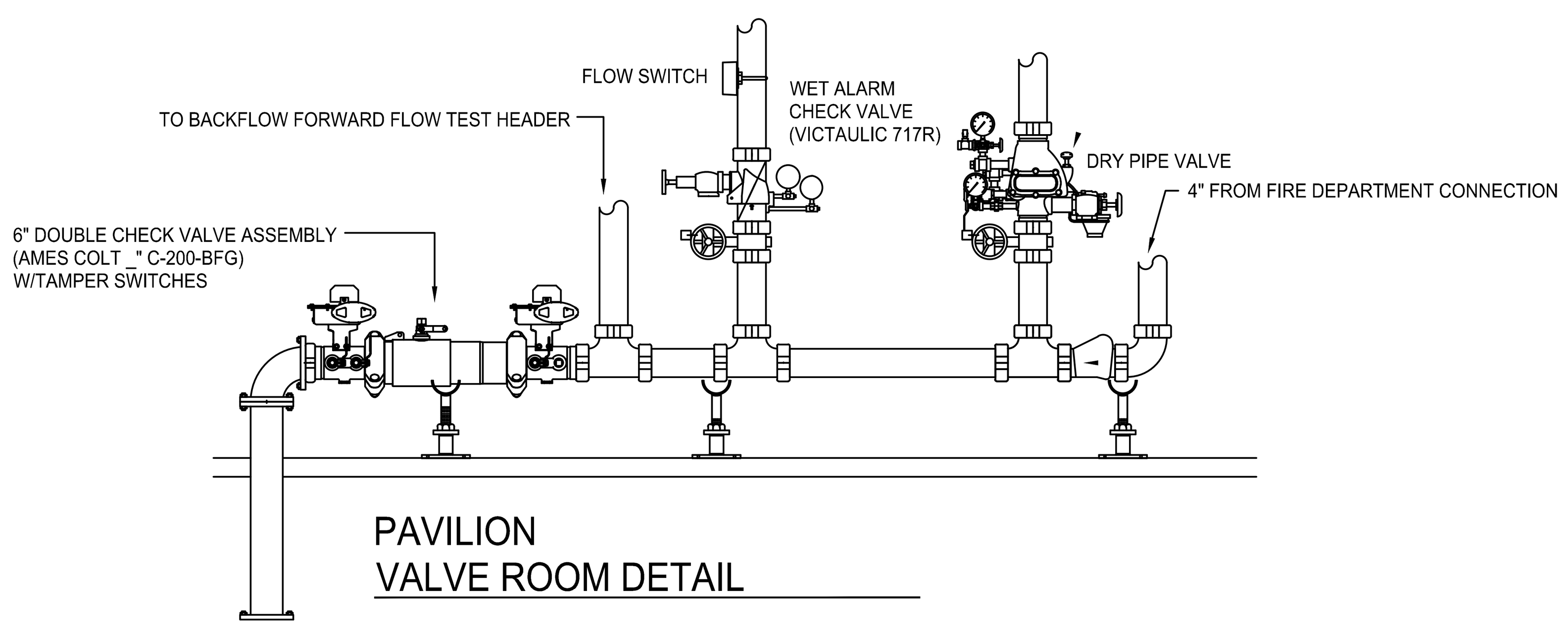

PAVILION
VALVE ROOM DETAIL

DUCTILE IRON FIRE SPRINNKLER SERVICE

HANGER NO. 15W
SIDE SAMMY SCREW

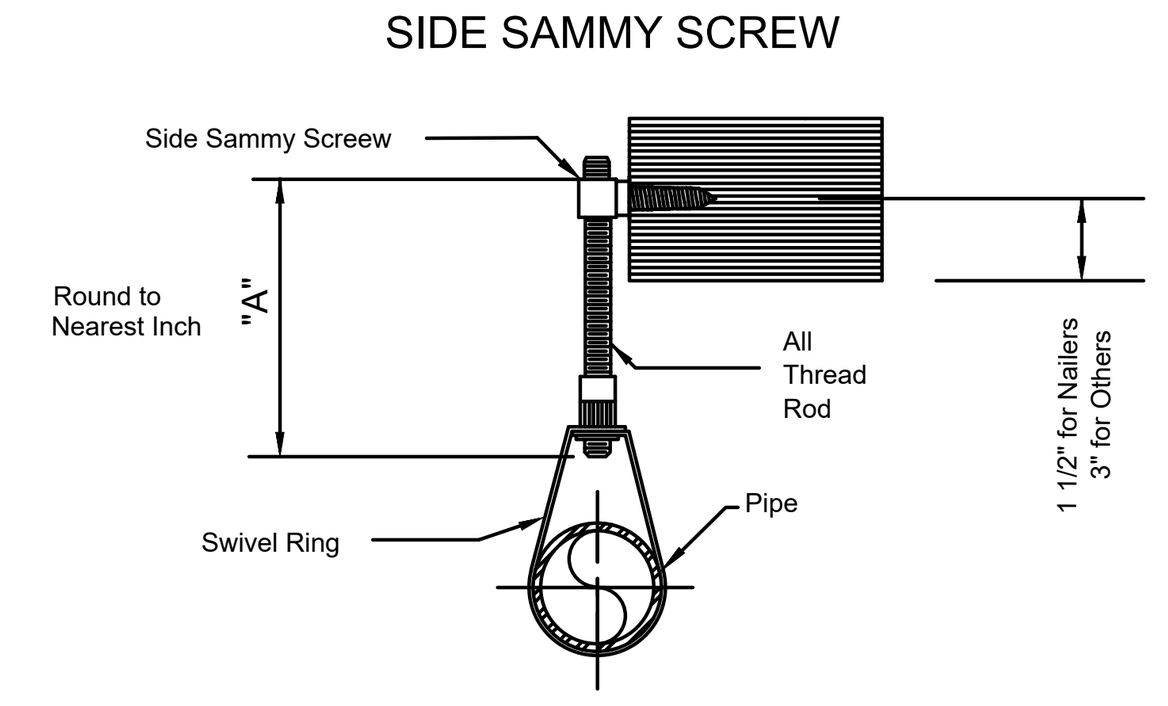

Note on Plan: Hanger Number and 'A' Dimension

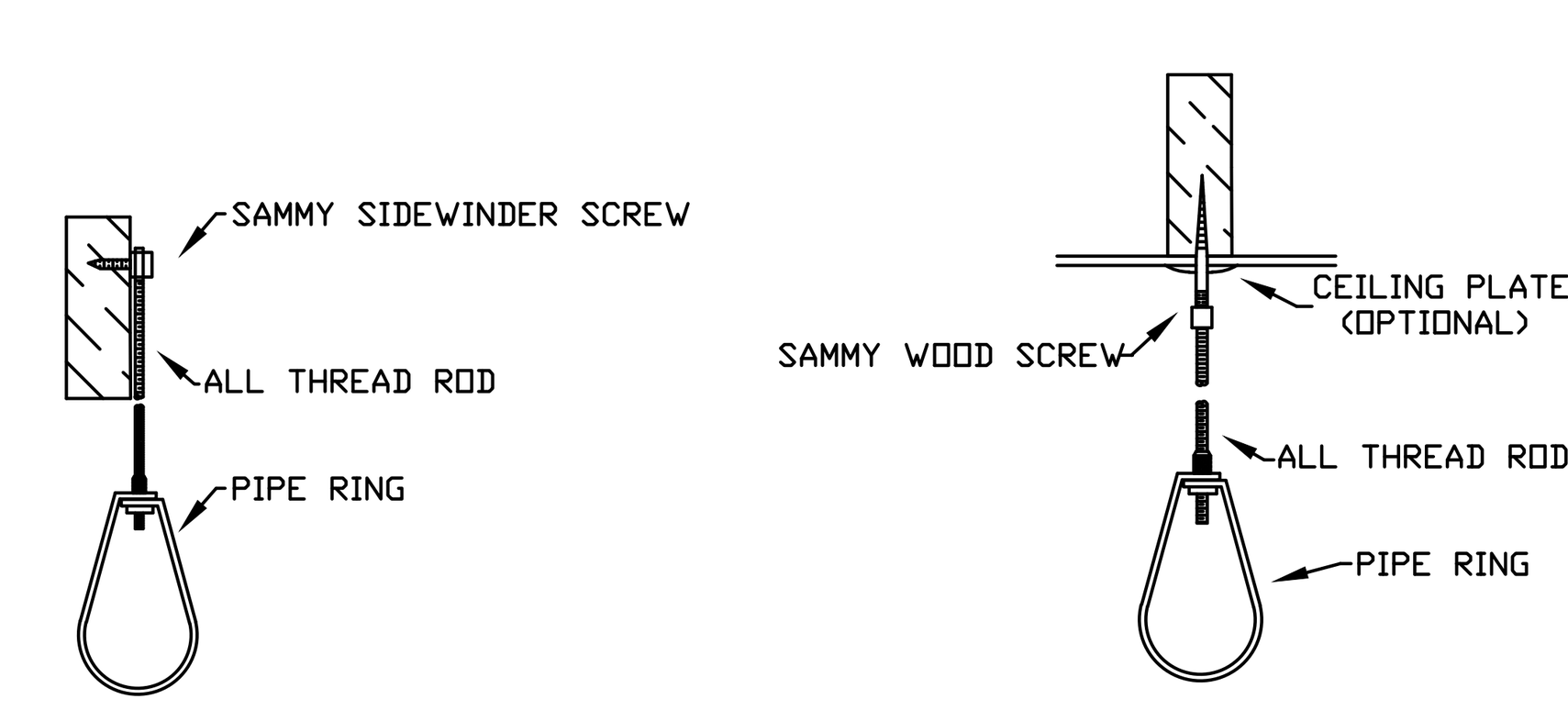

HANGER DETAILS
NOT TO SCALE

PAVILION BUILDING - SPRINKLER HEAD LEGEND

SYM	SPRINKLER TYPE	FINISH	TEMP	K	NPT
●	QUICK RESPONSE RECESSED PENDENT	WHITE	155	5.60	1/2"
⊗	QUICK RESPONSE UPRIGHT	BRASS	175	4.20	1/2"
○	QUICK RESPONSE UPRIGHT	BRASS	155	5.60	1/2"
⊗	QUICK RESPONSE UPRIGHT ON SPRIG	BRASS	155	5.60	1/2"
	DRY SIDEWALL	CHROME	155	5.60	1/2"

ARCHITECTS
Saccoccio & Associates, Inc.
1085 Park Avenue
Cranston, Rhode Island
02910
tel 401.942.7970
fax 401.942.7975

Consultant
ENGINEERING DESIGN SERVICES INCORPORATED
141 Industrial Highway Slatersville, RI 02876
Tel (401) 765-7659 Fax (401) 765-2984

Education Center, Animal Building, & Pavilion

ROGER WILLIAMS PARK ZOO
100 ELMWOOD AVENUE
PROVIDENCE, RI 02907

Revision Schedule	
Revision Number	Revision Date

Issued for Bid
08/19/2024

SHEET TITLE

FIRE PROTECTION LEGEND, GENERAL NOTES, AND DIAGRAMS

DRAWN BY: DDL		JOB NUMBER:	18050
CHECKED BY: GGM		DATE:	08/19/2024

FP0.0

SHEET: OF:

ELECTRICAL SYMBOL LEGEND

SYMBOL	DESCRIPTION	MOUNTING
A 3c	LED, INCANDESCENT, COMPACT FLUORESCENT OR H.I.D. LIGHTING FIXTURE; (SUBSCRIPTS: "LT-#" INDICATES FIXTURE TYPE, NUMBER "3" INDICATES CIRCUIT NUMBER, AND LOWER CASE LETTER "c" INDICATES SWITCH/CONTACTOR CONTROLLED BY).	REFER TO LIGHTING FIXTURE SCHEDULE.
A 5d	LINEAR LED LIGHTING FIXTURE; (SUBSCRIPTS INDICATE THE SAME AS ABOVE).	REFER TO LIGHTING FIXTURE SCHEDULE.
A 5d	2'x2' LED LIGHTING FIXTURE; (SUBSCRIPTS INDICATE THE SAME AS ABOVE).	REFER TO LIGHTING FIXTURE SCHEDULE.
B 5d	LED WALL MOUNTED LIGHTING FIXTURE. (SUBSCRIPTS INDICATE SAME AS ABOVE).	REFER TO LIGHTING FIXTURE SCHEDULE.
PL	"PL" INDICATES PLUG-LOAD CONTROLLED RECEPTACLE WITH RELAY CONNECTED TO ROOMS LIGHTING CONTROL SYSTEM, TIME SWITCH OR "PL" RECEPTACLE WITH INTEGRAL PROGRAMMABLE TIMER. "PL" RECEPTACLES SHALL BE CLEARLY MARKED PER CODE. "PL" SHALL NOT TURN OFF POWER TO NON-CONTROLLABLE RECEPTACLES ON THE SAME CIRCUIT.	
2 C	SINGLE CONVENIENCE OUTLET; 125 VOLT, 20 AMPERE, U-SLOT GROUNDING TYPE. (SUBSCRIPT AS FOLLOWS: "2" INDICATES CIRCUIT NUMBER, "C" INDICATES CEILING MOUNTED)	18" A.F.F., UON
2 C	DUPLEX CONVENIENCE OUTLET; 125 VOLT, 20 AMPERE, U-SLOT GROUNDING TYPE. (SUBSCRIPT AS FOLLOWS: "2" INDICATES CIRCUIT NUMBER, "C" INDICATES CEILING MOUNTED)	18" A.F.F.
TV 2 C	DUPLEX CONVENIENCE OUTLET; 125 VOLT, 20 AMPERE, U-SLOT GROUNDING TYPE. (SUBSCRIPT AS FOLLOWS: "2" INDICATES CIRCUIT NUMBER, "C" INDICATES CEILING MOUNTED, "TV" INDICATES TELEVISION POWER RECEPTACLE MOUNTED AT HEIGHT TO BE COORDINATED WITH THE ARCHITECT AND/OR OWNER. SEE "TYPICAL ELECTRICAL NOTES", #16 ON THE SHEET.)	46" AFF
EWC WP WC 2 C	DUPLEX CONVENIENCE OUTLET; 125 VOLT, 20 AMPERE, U-SLOT GROUNDING TYPE WITH GROUND FAULT PROTECTION. (SUBSCRIPT AS FOLLOWS: "2" INDICATES CIRCUIT NUMBER, "C" INDICATES CEILING MOUNTED, "EWC" INDICATE ELECTRIC WATER COOLER; "WP" INDICATES PROVIDE WP WHILE-IN-USE ENCLOSURE; "WC" INDICATES PROVIDE WP FLIP-LID COVER)	18" A.F.F.
WP WC 2 C	DUPLEX CONVENIENCE OUTLET; 125 VOLT, 20 AMPERE, U-SLOT GROUNDING TYPE WITH GROUND FAULT PROTECTION. (SUBSCRIPT AS FOLLOWS: "2" INDICATES CIRCUIT NUMBER, "C" INDICATES CEILING MOUNTED; "WP" INDICATES PROVIDE WP WHILE-IN-USE ENCLOSURE; "WC" INDICATES PROVIDE WP FLIP-LID COVER)	46" A.F.F.
EWC WP 2	SINGLE CONVENIENCE OUTLET; 125 VOLT, 20 AMPERE, U-SLOT GROUNDING TYPE WITH GROUND FAULT PROTECTION. (SUBSCRIPT AS FOLLOWS: "2" INDICATES CIRCUIT NUMBER, "EWC" INDICATE ELECTRIC WATER COOLER; "WP" INDICATES PROVIDE WP WHILE-IN-USE ENCLOSURE.	18" A.F.F.
2 C	QUADRUPLEX CONVENIENCE OUTLET; 125 VOLT, 20 AMPERE, U-SLOT GROUNDING TYPE. (SUBSCRIPT AS FOLLOWS: "2" INDICATES CIRCUIT NUMBER, "C" INDICATES CEILING MOUNTED)	18" A.F.F.
	SPECIAL NEMA CONFIGUATION OUTLET; VERIFY NEMA TYPE WITH EQUIPMENT TO BE SERVED.	
	SURFACE RACEWAY WITH POWER & TELE/DATA OUTLETS INSTALLED. PROVIDE WIREMOLD 40N2 CABLE SMART SYSTEM WITH ALL REQUIRED ACCESSORIES AND FITTINGS OR EQUAL. REFER TO DETAIL ON DWG. E____ LOCATION WITHIN 6'-0" OF SINKS SHALL BE PROVIDED WITH GFCI RECEPTACLES.	ABOVE COUNTER BACKSPLASH, UON
2 FB	FLUSH FLOOR-BOX WITH OUTLETS; 125 VOLT, 20 AMPERE, U-SLOT GROUNDING TYPE AND TELEPHONE/DATA OUTLET. (SUBSCRIPT AS FOLLOWS: "2" INDICATES CIRCUIT NUMBER). REFER TO DETAIL ON DRAWING E307.	FLOOR
P	WALL OR COLUMN RECESSED JUNCTION BOX WITH POWER FURNITURE FEED (MINIMUM 1" CONDUIT). REFER TO DETAIL ON DRAWING E307.	18" A.F.F. (UON)
C	WALL OR COLUMN RECESSED JUNCTION BOX WITH COMMUNICATIONS FURNITURE FEED (MINIMUM 2" CONDUIT). REFER TO DETAIL ON DRAWING E307.	18" A.F.F. (UON)
P	RECESSED FLOOR-BOX POKE-THRU WITH POWER FURNITURE FEED (MINIMUM 1" CONDUIT). REFER TO DETAIL ON DRAWING E307.	FLOOR
C	RECESSED FLOOR-BOX POKE-THRU WITH COMMUNICATIONS FURNITURE FEED (MINIMUM 2" CONDUIT). REFER TO DETAIL ON DRAWING E307.	FLOOR
C W	COMBINATION TELEPHONE/DATA OUTLET; PROVIDE 3/4"C. (EMT) WITH PULL STRING FROM OUTLET TO ABOVE DROP CEILING. "C" INDICATES TO LOCATION ABOVE COUNTER BACKSPLASH, "W" INDICATES WALL MOUNTED TELEPHONE MOUNTED PER ARCHITECT'S DIRECTION. EACH OUTLET SHALL BE PROVIDED WITH (3) CATEGORY 6 CABLES PER THE OWNER'S SPECIFICATIONS.	18" A.F.F., UON
TV	TELEVISION OUTLET. E.C. SHALL PROVIDE RECESSED BACKBOX WITH 3/4" CONDUIT WITH PULL STRING BOX TO ABOVE DROP CEILING WITHIN THE BUILDING. PROVIDE BUSHED END CAPS TO ALL CONDUITS. SEE "TYPICAL ELECTRICAL NOTES", #16 ON THE SHEET.	
CR	SECURITY SYSTEM CARD ACCESS READER (BY OTHERS). E.C. SHALL PROVIDE RECESSED BACKBOX (HIRSCH MB3) PER SECURITY SYSTEM MANUFACTURER'S DIRECTION WITH 3/4" CONDUIT WITH PULL STRING FROM CARD ACCESS READER TO ABOVE DROP CEILING WITHIN THE BUILDING. LABEL CONDUIT ABOVE DROP CEILING WITH LOCATION OF CARD ACCESS READER. PROVIDE BUSHED END CAPS TO ALL CONDUITS.	48" AFF OR AFG
SPD	SURGE PROTECTION DEVICE. PROVIDE FOR EACH NEW PANELBOARD AS REQUIRED. CONNECTIONS SHALL BE PROVIDED PER THE MANUFACTURER'S INSTRUCTIONS & RECOMMENDATIONS. SEE DRAWING E105 FOR ADDITIONAL INFORMATION.	
WP J	JUNCTION BOX; SIZE AS REQUIRED PER CODE. "WP" INDICATES LISTED AS WEATHER-PROOF, GASKETED JUNCTION BOX.	
P	EMERGENCY CALL SYSTEM PULL CORD.	48" AFF OR AFG
	EMERGENCY CALL SYSTEM INDICATING HORN/STROBE. CONNECT 120VAC POWER UN-SWITCHED AND AHEAD OF ANY GFCI RECEPTACLES.	ABOVE DOOR

SYMBOL	DESCRIPTION	MOUNTING
R	RELAY; REFER TO PLANS FOR RATINGS.	
C	CONTACTOR; REFER TO PLANS FOR RATINGS.	
	PANELBOARD SURFACE MOUNTED; 208Y/120V, 3-PHASE, 4-WIRE. REFER TO "BRANCH CIRCUIT PANELBOARD SCHEDULES" ON PLANS.	MOUNT 6'-6" AFF TO TOP BREAKER.
60AF/50AT/3P/3R	FUSED DISCONNECT SWITCH. 60AF/50AT INDICATES FRAME SIZE/FUSE SIZE IN THAT ORDER, 3P INDICATES NUMBER OF POLES & 3R INDICATES NEMA RATING. STARTERS FOR HVAC EQUIPMENT BY MECHANICAL CONTRACTOR.	
60AF/3P/3R	UN-FUSED DISCONNECT SWITCH. 60AF INDICATES FRAME SIZE, 3P INDICATES NUMBER OF POLES & 3R INDICATES NEMA RATING. STARTERS FOR HVAC EQUIPMENT BY MECHANICAL CONTRACTOR.	
	ENCLOSED CIRCUIT BREAKER.	
	GROUND, PER NEC.	
1,3 IG GFCI P	HOMERUN TO PANELBOARD; "P" INDICATES PANEL, "1,3" INDICATES CIRCUIT NUMBERS. "GFCI" INDICATES GFCI-TYPE CIRCUIT BREAKER; "IG" INDICATES ISOLATED GROUND CIRCUIT (SEE ISOLATED GROUND RECEPTACLE DETAIL ON DRAWING E3.2 & REFER TO "TYPICAL CIRCUITING DETAIL" ON PLANS.	
C 7 P	HOMERUN TO PANELBOARD & CONTROLLED BY SENSORS AND CONTACTOR; "P" INDICATES PANEL, "5" INDICATES CIRCUIT NUMBER.	
SM	MANUAL MOTOR RATED TOGGLE SWITCH / STARTER WITH THERMAL OVERLOADS.	48" AFF
Sa	SINGLE POLE SWITCH; "a" INDICATES LIGHTING FIXTURES CONTROLLED.	48" AFF
S3a	THREE-WAY SWITCH; "a" INDICATES LIGHTING FIXTURES CONTROLLED.	48" AFF
WS	WALL SWITCH VACANCY SENSOR (MANUAL "ON" AND AUTOMATIC "OFF") EQUAL TO LEVITON MODEL # OSSMT. INSTALL PER MANUFACTURERS INSTRUCTIONS.	48" AFF
US	ULTRASONIC OCCUPANCY SENSOR EQUAL TO LEV ITON MODEL # OSC10-RUW/ OSC20-RUW. WIRE TO POWER-PACK OR CONTROLLER PER MANUFACTURERS INSTRUCTIONS. SET DELAY TIMES FOR 15 MINUTES.	CEILING
PP	POWER PACK FOR "DT" & "US" VACANCY SENSORS. WIRE PER MANUFACTURERS INSTRUCTIONS FOR MANUAL "ON" WITH WALL LOW VOLTAGE SWITCH AND AUTOMATIC "OFF" WITH SENSOR.	ABOVE ACCESSIBLE CEILING OR PROVIDE ACCESS PANEL IN GYPSUM CEILINGS.
LSa	LOW VOLTAGE MANUAL ON - OFF SWITCH EQUAL TO LEVITON MODEL # RDGSW-2CW; "a" INDICATES LIGHTING FIXTURES CONTROLLED. WIRE TO POWER-PACK PER MANUFACTURE'S INSTRUCTIONS	48" AFF
TS	PROGRAMMABLE TIME SWITCH. PROGRAM ON/OFF TIMES PER THE OWNER'S DIRECTION AND ADJUST ALL SET-POINTS (LATITUDE, TIME OF DAY, DATE, ETC..) TO CORRECT SETTINGS. PROVIDE PASS & SEYMOUR #RT24 (COLOR BY ARCHITECT) OR EQUAL.	48" AFF
VS	DUAL TECHNOLOGY VACANCY SENSOR EQUAL TO LEVITON MODEL # OSC10-MWW/ OSC20-MWW. WIRE TO CONTROLLER PER MANUFACTURERS INSTRUCTIONS FOR MANUAL "ON" WITH WALL LOW VOLTAGE SWITCH AND AUTOMATIC "OFF" WITH SENSOR. SET DELAY TIMES FOR 15 MINUTES. SET SENSOR SO THAT ONLY ONE TECHNOLOGY IS NEEDED TO KEEP LIGHTS ON.	CEILING
OS	DUAL TECHNOLOGY OCCUPANCY SENSOR EQUAL TO LEVITON MODEL # OSC10-MWW/ OSC20-MWW. WIRE TO CONTROLLER PER MANUFACTURERS INSTRUCTIONS FOR MANUAL "ON" WITH WALL LOW VOLTAGE SWITCH AND AUTOMATIC "OFF" WITH SENSOR. SET DELAY TIMES FOR 15 MINUTES. SET SENSOR SO THAT ONLY ONE TECHNOLOGY IS NEEDED TO KEEP LIGHTS ON.	CEILING
DC	DIMMING ROOM CONTROLLER EQUAL TO LEVITON MODEL # DRC07-ED0. WIRE PER MANUFACTURER'S INSTRUCTIONS.	ABOVE ACCESSIBLE CEILING OR PROVIDE ACCESS PANEL IN GYPSUM CEILINGS.
DL	DIMMING PHOTOCELL WITH ADJUSTABLE DAY-LIGHT SENSOR DOME EQUAL TO LEVITON MODEL # ODC0P-D0W. WIRE PER MANUFACTURER'S INSTRUCTIONS.	CEILING
PL	PLUG-LOAD ROOM CONTROLLER RELAY EQUAL TO LEVITON MODEL # DRD07-EDO. WIRE PER MANUFACTURER'S INSTRUCTIONS.	ABOVE ACCESSIBLE CEILING OR PROVIDE ACCESS PANEL IN GYPSUM CEILINGS.
LDa	LOW VOLTAGE DIMMING SWITCH (ZONE 1) EQUAL TO LEVITON MODEL # RDGSW-4CW; "a" INDICATES LIGHTING FIXTURES CONTROLLED. WIRE PER MANUFACTURE'S INSTRUCTIONS.	48" AFF
LDb	LOW VOLTAGE DIMMING SWITCH (ZONE 1) EQUAL TO LEVITON MODEL # RDGSW-4CW; "b" INDICATES LIGHTING FIXTURES CONTROLLED. WIRE PER MANUFACTURE'S INSTRUCTIONS.	48" AFF
LDc	LOW VOLTAGE DIMMING SWITCH (ZONE 1) EQUAL TO LEVITON MODEL # RDGSW-4CW; "c" INDICATES LIGHTING FIXTURES CONTROLLED. WIRE PER MANUFACTURE'S INSTRUCTIONS.	48" AFF
DS	COMBINATION WALL DIMMER & VACANCY SENSOR EQUAL TO LUTRON MAESTRO #MS-Z101-V. WIRE PER MANUFACTURER'S INSTRUCTIONS.	48" AFF
EBS	EMERGENCY BURNER SWITCH, SLATER CAT. No. 730 BR WITH RED FACEPLATE MARKED "BURNER EMERGENCY SWITCH". PROVIDE A CLEAR PROTECTIVE COVER. REFER TO DETAIL.	72" AFF
FM	FIRE-O-MATIC SWITCH MOUNTED OVER BURNER. REFER TO DETAIL.	

ABBREVIATIONS

A	AMPERES
ADA	AMERICANS WITH DISABILITIES ACT
AMPS	AMPERES
AFF	ABOVE FINISHED FLOOR
A/C	AIR CONDITIONING
AWG	AMERICAN WIRE GAGE
C	CONDUIT
C/B	CIRCUIT BREAKER
CLG	CEILING
DN	DOWN
DWG	DRAWING
E.C.	ELECTRICAL CONTRACTOR
EQ	EQUAL
F.A.	FIRE ALARM
FACP	FIRE ALARM CONTROL PANEL
FLR	FLOOR
G.C.	GENERAL CONTRACTOR
GFCI	GROUND FAULT CIRCUIT INTERUPTER.
G	GROUND
GND	GROUND
HVAC	HEATING, VENTILATING, & & AIR CONDITIONING
I.T.	INFORMATION TECHNOLOGY
JB	JUNCTION BOX
KVA	KILOVOLT-AMPERES
KW	KILOWATT
LTG	LIGHTING
MAX	MAXIMUM
M.C.	MECHANICAL CONTRACTOR
MECH	MECHANICAL
MIN	MINIMUM
MTD	MOUNTED
NAC	F.A. NOTIFICATION APPLIANCE CIRCUIT EXPANDER PANEL
NEC	NATIONAL ELECTRICAL CODE
NTS	NOT TO SCALE
P	POLE
P.C.	PLUMBING CONTRACTOR
PNL	PANEL
TYP	TYPICAL
UL	UNDERWRITERS LABATORY
UON	UNLESS OTHERWISE NOTED
V	VOLTS
W	WATTS
WP	WEATHER-PROOF
℄	CENTERLINE

TYPICAL ELECTRICAL NOTES

1. FURNISH LABOR, MATERIALS, EQUIPMENT AND SERVICES NECESSARY FOR THE PROPER AND COMPLETE INSTALLATION OF ALL ELECTRIC WORK SHOWN ON THE DRAWINGS AND HEREIN SPECIFIED.
2. ALL ITEMS NOT SHOWN ON THE DRAWINGS OR CALLED FOR IN THE SPECIFICATIONS, BUT WHICH ARE NECESSARY TO MAKE A COMPLETE ELECTRICAL INSTALLATION, SHALL BE FURNISHED AND INSTALLED AS PART OF THIS PROJECT.
3. ALL ELECTRICAL INSTALLATIONS AND GROUNDING SHALL BE IN STRICT ACCORDANCE WITH THE LATEST REQUIREMENTS OF THE LOCAL, STATE AND NATIONAL CODES.
4. OBTAIN AND PAY FOR ALL REQUIRED PERMITS AND INSPECTIONS.
5. MATERIALS AND WORKMANSHIP SHALL BE THE BEST OF THEIR RESPECTIVE KIND AND IN FULL ACCORDANCE WITH THE MOST MODERN ELECTRICAL CONSTRUCTION STANDARDS. ALL MATERIAL SHALL BE NEW, UNLESS OTHERWISE NOTED AND FREE OF ANY DEFECTS.
6. THE ELECTRICAL CONTRACTOR SHALL CLEAN AT THE END OF EACH DAY ALL AREAS WORKED IN. EMPTY BOXES, RUBBISH, AND OTHER CONSTRUCTION MATERIALS OF NO USE SHALL BE REMOVED FROM THE BUILDING.
7. ALL WORK SEQUENCES SHALL BE COORDINATED WITH THE G.C. AND SHALL BE COORDINATION WITH OTHER BUILDING TRADES AND G.C. BUILDING SCHEDULES.
8. ALL BRANCH CIRCUITS RATED AT 120 VOLTS, 20 AMPERES EXCEEDING 75 FEET SHALL BE MINIMUM #10 AWG.
9. THE ELECTRICAL CONTRACTOR (E.C.) SHALL COORDINATE WITH THE LOCAL UTILITY POWER COMPANY AND PROVIDE ALL MATERIAL & LABOR REQUIRED TO COMPLY WITH THE UTILITY POWER COMPANY'S REQUIREMENTS AND STANDARDS, PRIOR TO ORDERING ANY ELECTRICAL EQUIPMENT, SUCH AS, SWITCHGEAR, PANELS, TRANSFORMERS, DISCONNECT SWITCHES, ETC... E.C. SHALL CONFIRM METERING SEQUENCE (HOT OR COLD) AND MAKE THE APPROPRIATE PROVISIONS FOR THE APPROVED METERING SEQUENCE ARRANGEMENT. A.I.C. RATINGS, GROUNDING, BONDING, RACEWAYS, ETC... SHALL BE IN ACCORDANCE WITH THE UTILITY COMPANY'S STANDARDS.
10. THE ELECTRICAL CONTRACTOR (E.C.) SHALL COORDINATE WITH THE LOCAL TELEPHONE COMPANY AND PROVIDE ALL MATERIAL & LABOR REQUIRED TO COMPLY WITH THE TELEPHONE COMPANY'S REQUIREMENTS AND STANDARDS, PRIOR TO ODERING ANY ELECTRICAL EQUIPMENT, SUCH AS, TERMINAL BOARDS, GROUNDING, RACEWAYS, ETC...
11. ALL RECEPTACLE WITH "WP" DESIGNATION SHALL BE PROVIDED WITH A WEATHER-PROOF WHILE IN-USE ENCLOSURE. (TYPICAL)
12. ELECTRICAL CONTRACTOR TO ALLOW TIME FOR DIRECTIONAL ADJUSTMENT OF ALL LIGHT FIXTURES AS DIRECTED BY OWNER.
13. ALL RECEPTACLES SHALL BE LABELED INDICATING THEIR RESPECTIVE PANEL & CIRCUIT NUMBER.
14. ALL PENETRATIONS FOR POWER RECEPTACLES, JUNCTION BOXES, TELEPHONE/DATA OUTLETS, SWITCHES, BACKBOXES, ETC.. LOCATED IN EXTERIOR WALLS SHALL BE PROVIDED WITH APPROPRIATE CAULKING AND GASKETS TO SEAL OFF AND PREVENT AIR LEAKAGE. FOLLOW CAULKING AND GASKET MANUFACTURERS INSTALLATION GUIDELINES TO ENSURE CORRECT AND EFFECTIVE INSTALLATION.
15. WHERE "TV" POWER RECEPTACLES AND TELEVISION LOW VOLTAGE OUTLETS ARE SHOWN ON THE PLANS THEY SHALL BE INSTALLED USING A LOW-VOLTAGE RECESSED MEDIA PLATE WITH DUPLEX RECEPTACLE EQUAL TO COMMERCIAL ELECTRIC #5310-WH.PROVIDE POWER RECEPTACLE BACK-BOX AS REQUIRED. (TYPICAL)

TELEPHONE & DATA RACEWAY NOTES

1. NO SECTION OF CONDUIT SHALL BE LONGER THAN 100-FEET BETWEEN PULL POINTS.
2. NO SECTION OF CONDUIT SHALL CONTAIN MORE THAN TWO 90-DEGREE BENDS, OR EQUIVALENT, BETWEEN PULL POINTS (e.g., OUTLET BOXES, TELECOMMUNICATIONS CLOSETS, OR PULL BOXES). IF THERE IS A REVERSE (U-SHAPED) BEND IN THE SECTION, A PULL BOX SHALL BE INSTALLED.
3. THE INSIDE RADIUS OF A BEND IN CONDUIT SHALL BE AT LEAST 6 TIMES THE INTERNAL DIAMETER. BENDS IN THE CONDUIT SHALL NOT CONTAIN ANY KINKS OR OTHER DISCONTINUITIES THAT MAY HAVE A DETRIMENTAL EFFECT ON THE CABLE SHEATH DURING CABLE PULLING OPERATIONS.
4. ANY SINGLE CONDUIT RUN EXTENDING FROM A TELECOMMUNICATIONS CLOSET SHALL NOT SERVE MORE THAN THREE OUTLET BOXES.
5. CONDUITS PROTRUDING / PENETRATING THROUGH THE FLOOR IN THE TELECOMMUNICATIONS CLOSETS SHALL BE TERMINATED 3-INCHES ABOVE THE FLOOR ADJACENT WALLS. PROTRUSIONS / PENETRATIONS SHALL BE LOCATED TO AVOID CREATING A TRIPPING HAZARD WITHIN THE CLOSETS. FIRESTOP ALL PROTRUSIONS / PENETRATIONS.
6. A MINIMUM 3/4-INCH CONDUIT SHALL BE PROVIDED FROM THE TELECOMMUNICATIONS CLOSET TO SERVE EACH WALL-MOUNTED PUBLIC TELEPHONE. IN DISCUSSION WITH THE TELEPHONE PROVIDER, AND WHERE IT IS DESIRABLE TO CONCEAL THE OUTLET BOX DIRECTLY BEHIND THE TELEPHONE, THE CENTER OF THE OUTLET BOX SHALL BE LOCATED 48-INCHES ABOVE THE FINISHED FLOOR. FOR RECESSED APPLICATIONS, THE CONDUIT AND BOX SHALL BE INSTALLED TO SUIT THE SPECIFIC TYPE OF MOUNTING. REFER TO APPLICABLE CODES, ADA GUIDELINES, UNIFORM FEDERAL ACCESSIBILITY STANDARDS, MANUFACTURES SPECIFICATIONS AND ANSI STANDARDS FOR ADDITIONAL REQUIREMENTS.
7. WHERE A TELECOMMUNICATIONS CONDUIT IS TO BE INSTALLED TO A DEVICE EXPOSED TO THE WEATHER, CARE SHALL BE TAKEN TO PREVENT THE INGRESS OF MOISTURE. CARE SHALL ALSO BE TAKEN TO ENSURE THAT MOISTURE WILL NOT COLLECT IN LOW POINTS, FREEZE AND DAMAGE THE CABLE. NONMETALLIC CONDUIT SHALL BE UV RESISTANT AND MARKED ACCORDINGLY.
8. CONDUITS SHALL BE REAMED TO ELIMINATE SHARP EDGES. METALLIC CONDUIT SHALL BE TERMINATED WITH AN INSULATED BUSHING.
9. REFER TO ANSI/TIA/EIA-606 FOR ADMINISTRATION OF THE CONDUIT SYSTEM IDENTIFICATION.
10. ALL CONDUITS SHALL BE PROVIDED WITH PULL STRINGS.
11. OUTLET BOXES SHALL BE NO SMALLER THAN 2-INCHES WIDE, 3-INCHES HIGH AND 2.5-INCHES DEEP. THIS WILL ACCOMODATE ONE OR TWO 3/4-INCH CONDUITS. WHERE A LARGER CONDUIT IS REQUIRED, THE BOX SHALL BE INCREASED ACCORDINGLY. A MAXIMUM 1-1/4-INCH CONDUIT WILL REQUIRE A 4-11/16-INCH x 4-11/16-INCH x 2-1/2-INCH BOX.
12. CONDUIT TYPES SHALL BE ELECTRICAL METALLIC TUBING (EMT) OR RIGID METAL CONDUIT. LOCATIONS SUBJECT TO MOISTURE SHALL BE RIGID PVC. FLEXIBLE CONDUIT SHALL NOT BE USED FOR TELE/DATA RACEWAYS.
13. CONDUIT REQUIREMENTS FOR SUPPORT, END PROTECTION AND CONTINUITY SHALL COMPLY WITH APPROPRIATE ELECTRICAL CODES.
14. CONDUIT AND BOXES FOR TELE/DATA WIRING SHALL BE DEDICATED TO THOSE SYSTEMS. POWER WIRING SHALL BE KEPT OUT OF CONDUIT AND BOXES DEDICATED TO TELE/DATA WIRING.
15. CONDUIT SIZE FOR MAXIMUM NUMBER OF CABLES (SEE TABLE BELOW):

Conduit Trade Size	Maximum number of cables based upon allowable fill									
	Cable Outside Diameter in Inches									
	0.13	0.18	0.22	0.24	0.29	0.31	0.37	0.53	0.62	0.70
1/2"	1	1	0	0	0	0	0	0	0	0
3/4"	6	5	4	3	2	2	1	0	0	0
1"	8	8	7	6	3	3	2	1	0	0
1-1/4"	16	14	12	10	6	4	3	1	1	1
1-1/2"	20	18	16	15	7	6	4	2	1	1
2"	30	26	22	20	14	12	7	4	3	2
2-1/2"	45	40	36	30	17	14	12	6	3	3
3"	70	60	50	40	20	20	17	7	6	6
3-1/2"	-	-	-	-	-	-	22	12	7	6
4"	-	-	-	-	-	-	30	14	12	7

ADDITIONAL SCOPE OF WORK

REFER TO INFORMATION TECHNOLOGY (IT) AND SECURITY DRAWINGS AND/OR COORDINATE WITH OWNER'S VENDOR FOR ADDITIONAL SCOPE OF WORK INCLUDING CONDUITS AND PATHWAYS, CABLE-TRAY, BACK-BOXES, CABLING AND GROUNDING REQUIREMENTS TO BE PROVIDED BY THIS CONTRACTOR AS PART OF THE ELECTRICAL SCOPE OF WORK.

RETURN AIR PLENUM NOTE

ALL CABLES AND WIRING INSTALLED ABOVE RETURN AIR PLENUM CEILINGS SHALL BE UL LISTED AND APPROVED FOR USE IN RETURN AIR PLENUM SPACES PER CODE. VERIFY EXACT LOCATIONS WITH OWNER, G.C. AND M.C. PRIOR TO BID. (TYPICAL)

RECEPTACLE BRANCH CIRCUIT WIRING SCHEDULE

CONDUCTOR AWG.	MAXIMUM CONDUCTOR LENGTH AT 120V	GROUND CONDUCTOR AWG.
#12	100'-0"	#12
#10	165'-0"	#10
#8	255'-0"	#10
#6	405'-0"	#10

RECEPTACLE BRANCH CIRCUIT WIRING SCHEDULE NOTES:

1. BASED ON 20A CIRCUIT LOADED TO 9A USING SINGLE PHASE, 2 WIRE CIRCUITS.
2. THE ABOVE SCHEDULE REPRESENTS MINIMUM CONDUCTOR SIZE BASED FROM PANEL TO CENTER OF LEAD TO OVERCOME VOLTAGE DROP.
3. MAKE PROVISIONS FOR JUNCTION BOX ADJACENT TO OUTLET TO TRANSITION TO #12 WIRE FOR FINAL TERMINATIONS TO DEVICE AS REQUIRED.

LUMINAIRE BRANCH CIRCUIT WIRING SCHEDULE

CONDUCTOR AWG.	MAXIMUM CONDUCTOR LENGTH AT 120V	MAXIMUM CONDUCTOR LENGTH AT 277V	GROUND CONDUCTOR AWG.
#12	75'-0"	175'-0"	#12
#10	120'-0"	285'-0"	#10
#8	190'-0"	445'-0"	#10
#6	300'-0"	-	#10

LUMINAIRE BRANCH CIRCUIT WIRING SCHEDULE NOTES:

1. BASED ON 20A CIRCUIT LOADED TO 12A USING SINGLE PHASE, 2 WIRE CIRCUITS.
2. THE ABOVE SCHEDULE REPRESENTS MINIMUM CONDUCTOR SIZE BASED FROM PANEL TO CENTER OF LEAD TO OVERCOME VOLTAGE DROP.
3. MAKE PROVISIONS FOR JUNCTION BOX ADJACENT TO OUTLET TO TRANSITION TO #12 WIRE FOR FINAL TERMINATIONS TO DEVICE AS REQUIRED.

ARCHITECTS

Saccoccio & Associates, Inc.

1085 Park Avenue
Cranston, Rhode Island
02910

tel 401.942.7970
fax 401.942.7975

Consultant

ENGINEERING design SERVICES INCORPORATED
149 Pennsylvania Avenue, Warwick, RI 02889
Tel (401) 785-7500 Fax (401) 785-2964

Education Center, Animal Building, & Pavilion

ROGER WILLIAMS PARK ZOO

100 ELMWOOD AVENUE
PROVIDENCE, RI 02907

Revision Schedule	
Revision Number	Revision Date

Issued for Bid
08/19/2024

SHEET TITLE

ELECTRICAL LEGENDS & NOTES

DRAWN BY:	SPC	JOB NUMBER:	18050
CHECKED BY:	RWD	DATE:	08/19/2024

E0.0

SHEET: OF:

BRANCH CIRCUIT PANELBOARD SCHEDULE

DESIGNATION	BUS AMPS	MAIN	LOCATION	VOLTAGE	PH	BREAKERS – USED – 1-POLE	BREAKERS – USED – 2-POLE	BREAKERS – USED – 3-POLE	BREAKERS – SPARE – 1-POLE	BREAKERS – SPARE – 2-POLE	BREAKERS – SPARE – 3-POLE	TOTAL POLES	MOUNTING	REMARKS
P-1A	400/3	400/3	SEE FLR. PLANS	208Y/120	3	(4) 15A, (42) 20A	(5) 15A	(1) 25A, (1) 225A	(5) 20A	-	-	72	SURFACE	SINGLE-TUB. 100,000 A.I.C. PROVIDE WITH SURGE PROTECTION DEVICE. (SEE SPD NOTES ON THIS DRAWING).
P-2A	225/3	225/3	SEE FLR. PLANS	208Y/120	3	(1) 15A, (36) 20A	(7) 15A	-	(5) 20A	-	-	72	SURFACE	SINGLE-TUB. 100,000 A.I.C. PROVIDE WITH SURGE PROTECTION DEVICE. (SEE SPD NOTES ON THIS DRAWING).
P-1C	400/3	400/3	SEE FLR. PLANS	208Y/120	3	(2) 15A, (46) 20A	(11) 15A	(1) 45A, (1) 60A	(5) 20A	-	-	84	SURFACE	SERVICE ENTRANCE RATED & DOUBLE-TUB. 100,000 A.I.C. PROVIDE WITH SURGE PROTECTION DEVICE . (SEE SPD NOTES ON THIS DRAWING).

NOTES:

1. ALL PANELBOARDS SHALL BE PROVIDED WITH AN ENGRAVED NAMEPLATE ON THE DOOR INDICATING THE PANELBOARD DESIGNATION, VOLTAGE, RATING OF MCB OR MAIN LUGS AND SOURCE OF SUPPLY. ENGRAVED PLATE SHALL BE AS CALLED FOR IN THE SPECIFICATIONS.
2. ALL PANELBOARDS SHALL BE PROVIDED WITH A TYPED (HAND WRITTEN IS NOT ALLOWED) CIRCUIT DIRECTORY INDICATING THE LOAD FED BY EACH CIRCUIT BREAKER AND ITS LOCATION IN THE BUILDING.
3. ALL PANELBOARDS SHALL BE PROVIDED WITH FULL SIZE EQUIPMENT GROUND AND NEUTRAL BUSSES ON EACH SIDE OF THE ENCLOSURE SO AS TO PROVIDE A SEPARATE EQUIPMENT GROUND AND NEUTRAL TERMINAL FOR EACH BRANCH CIRCUIT.
4. SPACES SHALL BE PROVIDED WITH ALL REQUIRED BUSSING, SUPPORTS, CONNECTORS, ETC.. NECESSARY FOR FUTURE INSTALLATION OF CIRCUIT BREAKERS.
5. FLUSH MOUNTED PANELBOARDS SHALL BE PROVIDED WITH FIVE (5) EMPTY 1" EMT CONDUITS INSTALLED UP TO ABOVE ACCESSIBLE CEILING FOR FUTURE USE.
6. ALL PANELBOARDS SHALL HAVE HINGED "DOOR-IN-DOOR" TYPE COVERS.
7. REFER TO THE SPECIFICATIONS FOR ALL OTHER PANELBOARD REQUIREMENTS. SERIES RATED AND ALUMINUM ARE NOT ALLOWED.
8. PROVIDE NEW CIRCUIT BREAKERS IN EXISTING PANELS TO BE RE-USED FOR NEW LOADS AS REQUIRED. PROVIDE BLANK PLATES IN ALL UN-USED SPACES. UPDATE AND/OR PROVIDE NEW CIRCUIT BREAKER DIRECTORIES FOR ALL PANELBOARDS.
9. ALL PANELBOARDS AND CIRCUIT BREAKERS SHALL BE FULLY RATED. SERIES RATED EQUIPMENT SHALL NOT BE USED.

MAIN DISTRIBUTION PANELBOARD SCHEDULE "MDP-ED"

FEEDER: (8) SETS OF: 4#600kcmil + 1#1/0G IN 4"C. | BUS AMPERAGE: 1600A/3P | VOLTAGE: 208Y/120, 3-PHASE, 4-WIRE | A.I.C. RATING: 100,000

DESIGNATION	BREAKERS – FRAME	BREAKERS – TRIP	BREAKERS – POLE	FEEDER	SERVICES	REMARKS
1	1600A/3P	1600A	3	(8) SETS OF: 4#600kcmil + 1#1/0G IN 4"C.	MAIN CIRCUIT BREAKER	-
2	400A/3P	400A	3	4#600kcmil + 1#1/0G IN 4"C.	PANEL "P-1A"	-
3	250A/3P	225A	3	-	SPACE	PROVISIONS ONLY
4	250A/3P	225A	3	3#250kcmil + 1#4G IN 3"C.	ERU-1	-
5	100A/3P	90A	3	(SEE MECHANICAL EQUIPMENT ELECTRICAL CONNECTION SCHEDULE ON DRAWING E0.5)	HPU-100 CKT #1	-
6	100A/3P	90A	3	(SEE MECHANICAL EQUIPMENT ELECTRICAL CONNECTION SCHEDULE ON DRAWING E0.5)	HPU-100 CKT #2	-
7	100A/3P	30A	2	2#8 + 1#8G IN 1"C.	WATER HEATER #1	-
8	100A/3P	30A	2	2#8 + 1#8G IN 1"C.	WATER HEATER #2	
9	225A/3P	200A	3	3#300kcmil + 1#2/0G IN 3"C.	ELEVATOR	-
10	400A/3P	400A	3	(SEE ONE-LINE DIAGRAM)	**FUTURE** PANEL "P-1C"	SERVES **FUTURE** ANIMAL BUILDING
11	100A/3P	100A	3	(SEE MECHANICAL EQUIPMENT ELECTRICAL CONNECTION SCHEDULE ON DRAWING E0.5)	HPU-200	
12	100A/3P	100A	3	-	SPACE	PROVISIONS ONLY
13	100A/3P	N/A	3	-	SPACE	PROVISIONS ONLY

DRY-TYPE TRANSFORMER SCHEDULE

DESIGNATION	KVA	PRIMARY – VOLTS	PRIMARY – PROTECTIVE DEVICE – LOCATION	PRIMARY – PROTECTIVE DEVICE – SIZE	PRIMARY – FEEDER	SECONDARY – VOLTS	SECONDARY – PROTECTIVE DEVICE – LOCATION	SECONDARY – PROTECTIVE DEVICE – SIZE	SECONDARY – FEEDER	REMARKS
T-1	75	208	PANEL "MDP"	225A/3P	4#4/0 + 1#3G IN 2-1/2"C.	208Y/120	FUSED DISC. SW.	225A/3P	3#300kcmil+ 1#2/0G IN 3"C.	ISOLATION TRANSFORMER

NOTES:

1. ALL TRANSFORMERS SHALL BE PROVIDED WITH AN ENGRAVED NAMEPLATE ON THE FRONT OF THE TRANSFORMER INDICATING IT'S DESIGNATION. ENGRAVED PLATE SHALL BE AS CALLED FOR IN THE SPECIFICATIONS.
2. ALL TRANSFORMERS PRIMARY AND SECONDARY CONNECTIONS SHALL BE MADE WITH A MINIMUM OF 18" OF FLEXIBLE METAL CONDUIT.
3. ALL TRANSFORMERS SHALL MEET EPAct 2016 EFFICIENCY REQUIREMENTS, NEMA-TP1 RATED AND ENERGY STAR LABELED.
4. ALL TRANSFORMER WINDINGS SHALL BE COPPER.

TYPICAL NOTE:

ALL NEW ELECTRICAL EQUIPMENT BUSSING, FEEDERS AND BRANCH CIRCUITS SHALL BE COPPER. (TYP.)

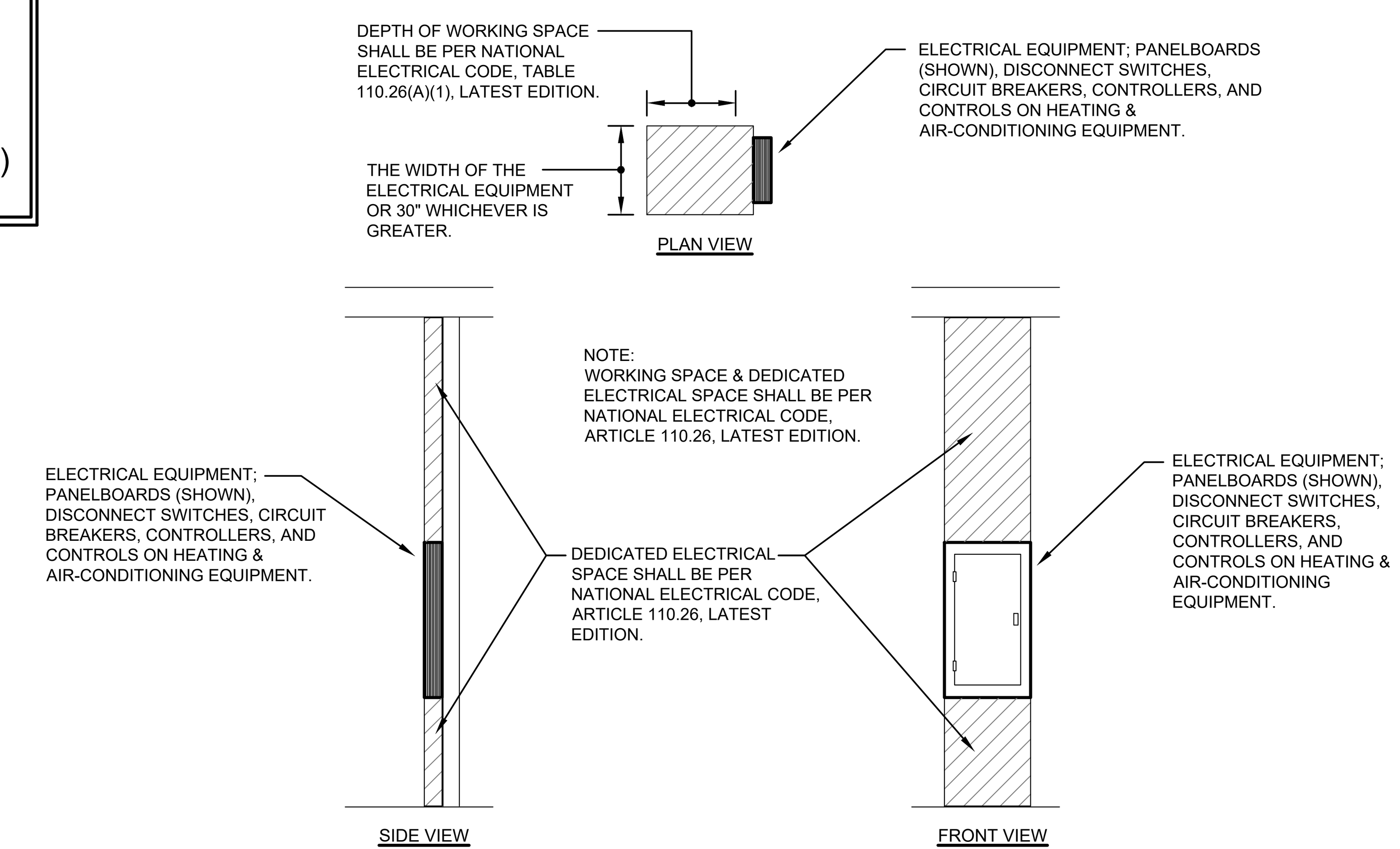

SPACES ABOUT ELECTRICAL EQUIPMENT DETAIL

NOT TO SCALE

DEDUCT ALTERNATE NOTE:

IN LIEU OF A FULL BACK-UP GENERATOR SYSTEM FOR THE EDUCATION AND ANIMAL BUILDINGS AS DESIGNED AS THE BASE BID AND PART OF THESE DOCUMENTS, THE E.C. SHALL PROVIDE A DEDUCT ALTERNATE PRICE TO PROVIDE A PAD-MOUNTED, DIESEL-FIRED ENGINE-DRIVEN BACK-UP GENERATOR SYSTEM IN A SOUND-ATTENUATED, WEATHER-PROOF ENCLOSURE FOR THE ANIMAL BUILDING ONLY. THE ANIMAL BUILDING ONLY GENERATOR SYSTEM SHALL CONSIST OF A 400AMP, 3-PHASE, 4-WIRE SERVICE-ENTRANCE RATED MAIN FUSED DISCONNECT SWITCH AT 208Y/120VOLTS, 3PH, 4W TO SERVE A 400AMP/4-POLE AUTOMATIC TRANSFER SWITCH (ATS). THE ATS SHALL SERVE PANEBOARD "P-1C". THE ATS SHALL BE FED FROM A 400A/3P BREAKER IN "MDP-ED" FOR THE NORMAL SIDE AND A 400AM/3P LOAD BREAKER ON THE GENERATOR FOR THE EMERGENCY SIDE. All FEEDERS SHALL BE 4#600KCMIL + 1#1/0G IN 4"C. (CONCRETE ENCASED UNDERGROUND DUCT BANK WHERE OUTSIDE OF BUILDINGS). THE GENERATOR RATING SHALL BE 208Y/120V, 3-PHASE, 4-WIRE AT 125kVA/100kW. THE DEDUCT ALTERNATE SYSTEM SHALL CONFORM TO ALL OTHER SPECIFICATIONS & REQUIREMENTS ON THE BASE BIDE DOCUMENTS.

SURGE PROTECTION DEVICE NOTES:

1. THE ELECTRICAL CONTRACTOR SHALL PROVIDE SURGE PROTECTION DEVICES FOR ALL PANELBOARDS FOR THIS PROJECT.

2. PANELBOARDS SHALL BE PROVIDED WITH SURGE PROTECTION DEVICES EQUAL TO SIEMENS SURGE PROTECTIVE DEVICE MODEL #TPS3 11-15 FOR 208Y/120VOLT, 3-PHASE 4-WIRE INSTALLATION.

3. THE ELECTRICAL CONTRACTOR SHALL COORDINATE WITH SURGE PROTECTIVE DEVICE MANUFACTURER FOR INSTALLATION & CONNECTION REQUIREMENTS PRIOR TO INSTALLATION.

POWER ONE-LINE NOTES:

1. NEW PADMOUNT TRANSFORMER NOTES:
   a. TRANSFORMER FURNISHED AND INSTALLED BY OWNER.
   b. PRIMARY CONDUIT WITH PULL WIRE BY E.C.
   c. PRIMARY CABLE AND CONNECTIONS BY OWNER.
   d. SECONDARY CABLE & CONNECTIONS AT TRANSFORMER BY E.C. WITH OWNER SUPERVISION.
   e. TRANSFORMER CONCRETE PAD BY OWNER.
   f. TRANSFORMER PAD GROUNDING BY OWNER.
   g. E.C. SHALL PROVIDE ALL LABOR & MATERIAL REQUIRED FOR SECONDARY SIDE OF TRANAFORMER.
2. DIESEL-FIRED, ENGINE DRIVEN (450kVA / 360kW) EMERGENCY GENERATOR (AS MANUFACTURED BY CATERPILLAR) IN MANUFACTURERS LEVEL 2 SOUND ATTENUATED WEATHERPROOF ENCLOSURE WITH A DBA RATING OF 75 AT 23'-0". PROVIDE REMOTE GENERATOR ANNUNCIATOR PANEL AT LOCATION DETERMINED BY THE FIRE DEPARTMENT & OWNER. PROVIDE GROUNDING AS REQUIRED PER NEC. THE EXACT LOCATION SHALL BE COORDINATED WITH THE BUILDING OWNER. THE DRAWINGS ARE BASED ON A CATERPILLAR 100 EKW AT 60HZ, C4.4 ACERT, DIESEL-FIRED, ENGINE DRIVEN GENERATOR SET. UNIT SHALL BE TESTED TO MAXIMUM LOAD BEFORE DELIVERY TO THE SITE IN AN ISO 9001 CERTIFIED FACILITY. UNIT SHALL HAVE A FUEL EFFICIENCY, DESIGNED TO MEET EPA STATIONARY EMERGENCY (TIER 3) EMISSIONS STANDARDS. SEISMIC CERTIFICATION SHALL BE REQUIRED. PROVIDE WITH EMCP 4.2 CONTROL PANEL, WITH A USER-FRIENDLY INTERFACE.
3. 1600A/3P AUTOMATIC TRANSFER SWITCH (ATS) TO SERVE PANEL "MDP-ED" SHALL BE EQUAL TO ASCO SERIES 300 SE #1600-3-400-C-1-C-11BG. PROVIDE GROUNDING AS REQUIRED PER NEC. PROVIDE ATS WITH CONTACTS FOR INTERFACE WITH ELEVATOR CONTROLLER. VERIFY EXACT REQUIREMENTS WITH ELEVATOR MANUFACTURER PRIOR TO ORDERING ATS.
4. PROVIDE (2) 1-1/2" RIGID METAL CONDUITS FOR CONTROL WIRING BETWEEN THE J-BOX, AUTOMATIC TRANSFER SWITCH AND GENERATOR REMOTE ANNUNCIATOR PANEL.
5. REFER TO FLOOR PLANS FOR LOCATIONS OF ALL ELECTRICAL EQUIPMENT.
6. ALL FREESTANDING ELECTRICAL SWITCHBOARDS, ATS AND TRANSFORMERS SHALL BE PROVIDED WITH A 4" HIGH CONCRETE HOUSING KEEPING PAD. (TYPICAL)
7. PROVIDE E-MON / D-MON SUB-METERING CLASS 2000 COMPLETE WITH "RIGHTENERGY" SOFTWARE, SPLIT-CORE SENSORS, DEMAND OPTION, 3-PHASE, 4-WIRE CONFIGURATION, STEEL ENCLOSURE WITH PAD-LOCK & MOUNTING FLANGES, LOW VOLTAGE WIRING & CONNECTIONS,AND ALL REQUIRED COMPONENTS PER THE MANUFACTURE'S INSTRUCTIONS. THE E-MON / D-MON SYSTEM SHALL BE PROVIDED FOR "MDP-PAV".
8. PROVIDE SERVICE ENTRANCE RATED FUSED DISCONNECT SWITCH (2500AF/2000AT/3P/NEMA-3R) FOR PHOTOVOLTAIC SYSTEM. VERIFY EXACT RATING SIZE REQUIRED AND LOCATION WITH PHOTOVOLTAIC SYSTEM VENDOR PRIOR TO BID.
9. PROVIDE FUSED DISCONNECT SWITCH 400AF/225AT/3P/NEMA-1 FOR SECONDARY SIDE OF TRANSFORMER "T-1". VERIFY EXACT SIZE REQUIRED WITH ELEVATOR MANUFACTURER PRIOR TO ANY WORK.
10. SECONDARY FEEDER TO PAVILION BUILDING.

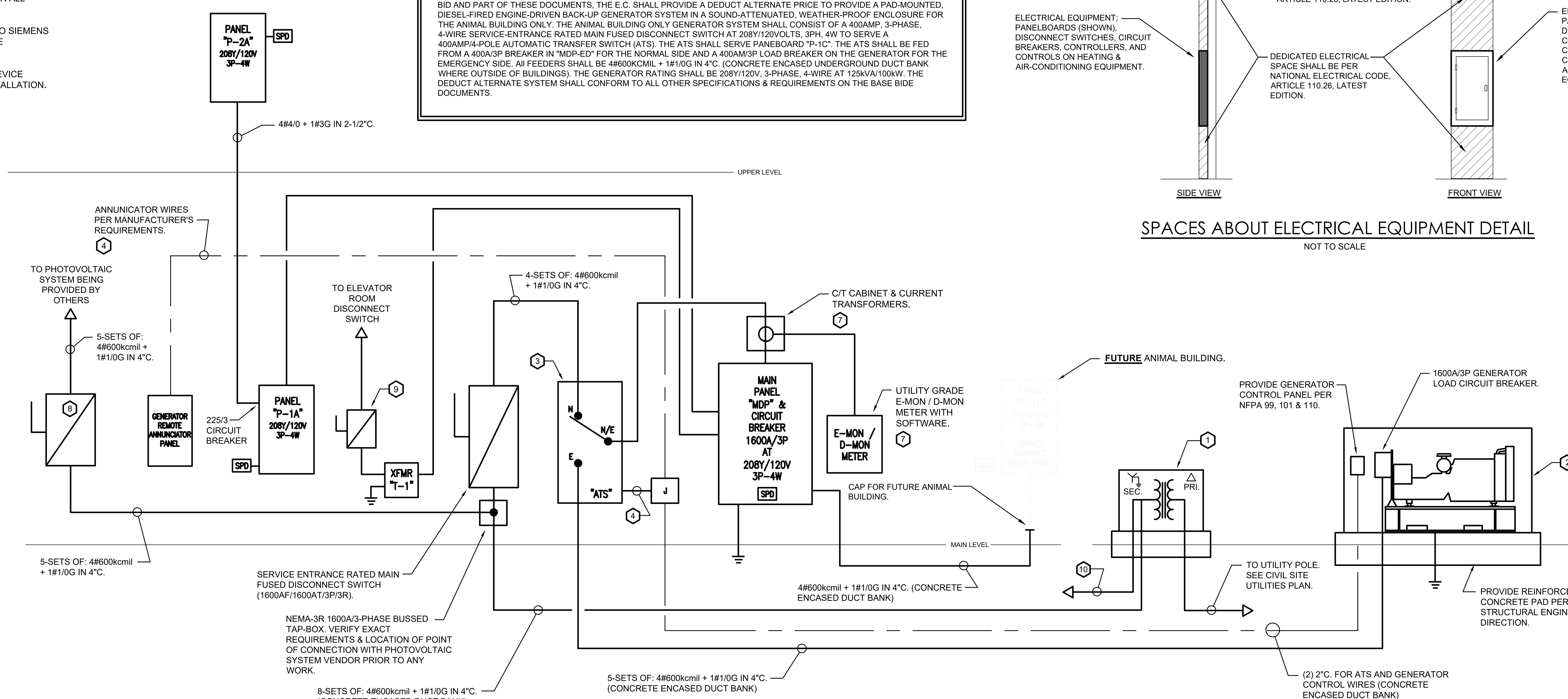

(EDUCATION & ANIMAL BUILDING)
PROPOSED POWER DISTRIBUTION ONE-LINE DIAGRAM

NOT TO SCALE

ARCHITECTS
Saccoccio & Associates, Inc.
1085 Park Avenue
Cranston, Rhode Island 02910
tel 401.942.7970
fax 401.942.7975

Consultant
ENGINEERING DESIGN SERVICES INCORPORATED

Education Center, Animal Building, & Pavilion

ROGER WILLIAMS PARK ZOO
100 ELMWOOD AVENUE
PROVIDENCE, RI 02907

Revision Schedule	
Revision Number	Revision Date

Issued for Bid
08/19/2024

SHEET TITLE

ELECTRICAL ONE-LINE DIAGRAM & SCHEDULES

DRAWN BY:	SPC	JOB NUMBER:	18050
CHECKED BY:	RWD	DATE:	08/19/2024

E0.1

SHEET: OF:

BRANCH CIRCUIT PANELBOARD SCHEDULE

DESIGNATION	BUS AMPS	MAIN	LOCATION	VOLTAGE	PH	BREAKERS						TOTAL POLES	MOUNTING	REMARKS
						USED			SPARE					
						1-POLE	2-POLE	3-POLE	1-POLE	2-POLE	3-POLE			
PAV-1	250/3	250/3	SEE FLR. PLANS	208Y/120	3	(10) 15A, (32) 20A	-	(2) 50A, (1) 60A	(5) 20A	-	-	72	SURFACE	SINGLE-TUB. 65,000 A.I.C. PROVIDE WITH SURGE PROTECTION DEVICE. (SEE SPD NOTES ON THIS DRAWING).
PAV-2	400/3	400/3	SEE FLR. PLANS	208Y/120	3	(4) 15A	-	(2) 15A, (2) 30A, (1) 70A, (2) 90A	(5) 20A	-	-	42	SURFACE	SINGLE-TUB. 65,000 A.I.C. PROVIDE WITH SURGE PROTECTION DEVICE. (SEE SPD NOTES ON THIS DRAWING).

NOTES:

1. ALL PANELBOARDS SHALL BE PROVIDED WITH AN ENGRAVED NAMEPLATE ON THE DOOR INDICATING THE PANELBOARD DESIGNATION, VOLTAGE, RATING OF MCB OR MAIN LUGS AND SOURCE OF SUPPLY. ENGRAVED PLATE SHALL BE AS CALLED FOR IN THE SPECIFICATIONS.
2. ALL PANELBOARDS SHALL BE PROVIDED WITH A TYPED (HAND WRITTEN IS NOT ALLOWED) CIRCUIT DIRECTORY INDICATING THE LOAD FED BY EACH CIRCUIT BREAKER AND ITS LOCATION IN THE BUILDING.
3. ALL PANELBOARDS SHALL BE PROVIDED WITH FULL SIZE EQUIPMENT GROUND AND NEUTRAL BUSSES ON EACH SIDE OF THE ENCLOSURE SO AS TO PROVIDE A SEPARATE EQUIPMENT GROUND AND NEUTRAL TERMINAL FOR EACH BRANCH CIRCUIT.
4. SPACES SHALL BE PROVIDED WITH ALL REQUIRED BUSSING, SUPPORTS, CONNECTORS, ETC.. NECESSARY FOR FUTURE INSTALLATION OF CIRCUIT BREAKERS.
5. FLUSH MOUNTED PANELBOARDS SHALL BE PROVIDED WITH FIVE (5) EMPTY 1" EMT CONDUITS INSTALLED UP TO ABOVE ACCESSIBLE CEILING FOR FUTURE USE.
6. ALL PANELBOARDS SHALL HAVE HINGED "DOOR-IN-DOOR" TYPE COVERS.
7. REFER TO THE SPECIFICATIONS FOR ALL OTHER PANELBOARD REQUIREMENTS. SERIES RATED AND ALUMINUM ARE NOT ALLOWED.
8. PROVIDE NEW CIRCUIT BREAKERS IN EXISTING PANELS TO BE RE-USED FOR NEW LOADS AS REQUIRED. PROVIDE BLANK PLATES IN ALL UN-USED SPACES. UPDATE AND/OR PROVIDE NEW CIRCUIT BREAKER DIRECTORIES FOR ALL PANELBOARDS.
9. ALL PANELBOARDS AND CIRCUIT BREAKERS SHALL BE FULLY RATED. SERIES RATED EQUIPMENT SHALL NOT BE USED.

MAIN DISTRIBUTION PANELBOARD SCHEDULE "MDP-PAV"

FEEDER: (2) SETS OF: 4#600kcmil + 1#1/0G IN (2) 4"C.	BUS AMPERAGE: 600A/3P	VOLTAGE: 208Y/120, 3-PHASE, 4-WIRE	A.I.C. RATING: 65,000

DESIGNATION	BREAKERS			FEEDER	SERVICES	REMARKS
	FRAME	TRIP	POLE			
1	800A/3P	800A	3	(2) SETS OF: 4#600kcmil + 1#1/0G IN (2) 4"C.	MAIN CIRCUIT BREAKER	-
2	250A/3P	250A	3	4#250kcmil + 1#4G IN 3"C.	PANEL "PAV-1"	-
3	400A/3P	400A	3	4#600kcmil + 1#1/0G IN 4"C.	PANEL "PAV-2"	-
4	200A/3P	200A	3	-	SPARE	-
5	100A/3P	N/A	3	-	SPACE	PROVISIONS ONLY
6	100A/3P	N/A	3	-	SPACE	PROVISIONS ONLY
7	100A/3P	N/A	3	-	SPACE	PROVISIONS ONLY
8	100A/3P	N/A	3	-	SPACE	PROVISIONS ONLY

TYPICAL NOTE:

ALL NEW ELECTRICAL EQUIPMENT BUSSING, FEEDERS AND BRANCH CIRCUITS SHALL BE COPPER. (TYP.)

SURGE PROTECTION DEVICE NOTES:

1. THE ELECTRICAL CONTRACTOR SHALL PROVIDE SURGE PROTECTION DEVICES FOR ALL PANELBOARDS FOR THIS PROJECT.
2. PANELBOARDS SHALL BE PROVIDED WITH SURGE PROTECTION DEVICES EQUAL TO SIEMENS SURGE PROTECTIVE DEVICE MODEL #TPS3 11-15 FOR 208Y/120VOLT, 3-PHASE 4-WIRE INSTALLATION.
3. THE ELECTRICAL CONTRACTOR SHALL COORDINATE WITH SURGE PROTECTIVE DEVICE MANUFACTURER FOR INSTALLATION & CONNECTION REQUIREMENTS PRIOR TO INSTALLATION.

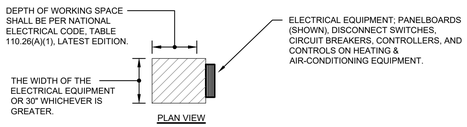

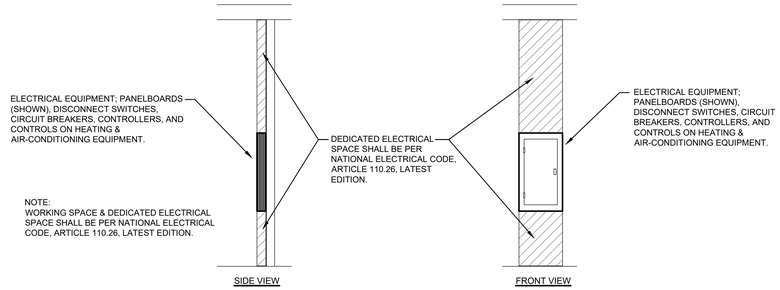

SPACES ABOUT ELECTRICAL EQUIPMENT DETAIL

NOT TO SCALE

POWER ONE-LINE NOTES:

1. NEW PADMOUNT TRANSFORMER NOTES:
   a. TRANSFORMER FURNISHED AND INSTALLED BY OWNER.
   b. PRIMARY CONDUIT WITH PULL WIRE BY E.C.
   c. PRIMARY CABLE AND CONNECTIONS BY OWNER.
   d. SECONDARY CABLE & CONNECTIONS AT TRANSFORMER BY E.C. WITHOWNER SUPERVISION.
   e. TRANSFORMER CONCRETE PAD BY OWNER.
   f. TRANSFORMER PAD GROUNDING BY OWNER.
   g. E.C. SHALL PROVIDE ALL LABOR & MATERIAL REQUIRED FOR SECONDARY SIDE OF TRANAFORMER.
2. PROVIDE E-MON / D-MON SUB-METERING CLASS 2000 COMPLETE WITH "RIGHTENERGY" SOFTWARE, SPLIT-CORE SENSORS, DEMAND OPTION, 3-PHASE, 4-WIRE CONFIGURATION, STEEL ENCLOSURE WITH PAD-LOCK & MOUNTING FLANGES, LOW VOLTAGE WIRING & CONNECTIONS,AND ALL REQUIRED COMPONENTS PER THE MANUFACTURE'S INSTRUCTIONS. THE E-MON / D-MON SYSTEM SHALL BE PROVIDED FOR "MDP-PAV".
3. REFER TO FLOOR PLANS FOR LOCATIONS OF ALL ELECTRICAL EQUIPMENT.
4. ALL FREESTANDING ELECTRICAL SWITCHBOARDS, ATS AND TRANSFORMERS SHALL BE PROVIDED WITH A 4" HIGH CONCRETE HOUSING KEEPING PAD. (TYPICAL)

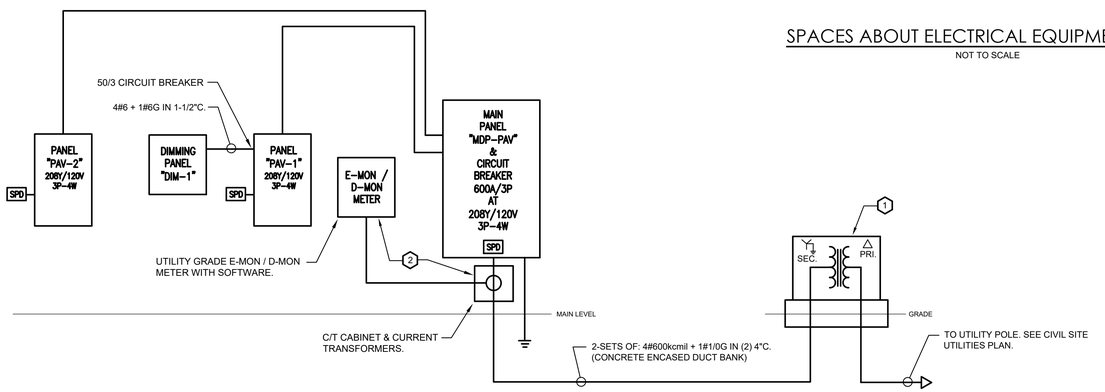

(PAVILION BUILDING)
PROPOSED POWER DISTRIBUTION ONE-LINE DIAGRAM

NOT TO SCALE

ARCHITECTS
Saccoccio & Associates, Inc.
1085 Park Avenue
Cranston, Rhode Island 02910
tel 401.942.7970
fax 401.942.7975
Consultant
ENGINEERING DESIGN SERVICES INCORPORATED
141 Harrison Avenue Rumford, RI 02916
Tel (401) 765-7499 Fax (401) 765-2964

Education Center, Animal Building, & Pavilion

ROGER WILLIAMS PARK ZOO
100 ELMWOOD AVENUE
PROVIDENCE, RI 02907

Revision Schedule	
Revision Number	Revision Date

Issued for Bid
08/19/2024

SHEET TITLE

ELECTRICAL ONE-LINE DIAGRAM & SCHEDULES

DRAWN BY:	SPC	JOB NUMBER:	18050
CHECKED BY:	RWD	DATE:	08/19/2024

E0.2

SHEET: OF:

EMERGENCY LIGHTING SYMBOL LEGEND

SYMBOL	DESCRIPTION	MOUNTING
#1A WP	WEATHER-PROOF DUAL EMERGENCY LIGHTING FIXTURE (REMOTE HEAD) WIRED TO EMERGENCY BATTERY UNIT (EBU) WITH REMOTE CAPABILITY. LITHONIA #ERE-W-T-WP-SQ. LAMPS SHALL BE 8-WATTS / 12-VOLTS FOR EACH LAMP. #1A INDICATES WIRE TO EBU WITH SAME DESIGNATION.	WALL, UON
#1A WP CLG	WEATHER-PROOF SINGLE EMERGENCY LIGHTING FIXTURE (REMOTE HEAD) WIRED TO EMERGENCY BATTERY UNIT (EBU) WITH REMOTE CAPABILITY. LITHONIA #ERE-W-SGL-WP-SQ. LAMPS SHALL BE 8-WATTS / 12-VOLTS FOR EACH LAMP. #1A INDICATES WIRE TO EBU WITH SAME DESIGNATION.	WALL, UON
EBU #1A	EMERGENCY BATTERY UNIT (DUAL ATTACHED HEADS) WITH REMOTE CAPABILITIES. EQUAL TO LITHONIA #ELT-275W-W-AM-VM CONNECT UN-SWITCHED TO LOCAL 120-VOLT LIGHTING CIRCUIT. "#1A" INDICATES EBU DESIGNATION.	WALL, UON
#1 CLG	DUAL EMERGENCY LIGHTING FIXTURE (REMOTE HEAD) WIRED TO EMERGENCY BATTERY UNIT (EBU) WITH REMOTE CAPABILITY. LITHONIA #ELA-W-T-LT24-LP06VS. LAMPS SHALL BE 5.5-WATTS / 12-VOLTS FOR EACH LAMP. #1 INDICATES WIRE TO EBU WITH SAME DESIGNATION. "CLG" INDICATES CEILING MOUNTED.	WALL, UON
N/E	NORMAL & EMERGENCY LIGHTING FIXTURE. MULE #MERU-LED-ACEM-(COLOR BY ARCHITECT)-IH WITH INTEGRAL PHOTOCELL. CONNECT UN-SWITCHED TO LOCAL LIGHTING CIRCUIT.	WALL
	SINGLE FACE LED LIGHTED EXIT SIGN WITH EMERGENCY BATTERY BACK-UP. EQUAL TO LITHONIA #LRP-1-RMR-120/277-ELN. PROVIDE ARROWS WHERE INDICATED ON PLANS.	CEILING
	DOUBLE FACE LED LIGHTED EXIT SIGN WITH EMERGENCY BATTERY BACK-UP. EQUAL TO LITHONIA #LRP-2-RMR-120/277-ELN. PROVIDE ARROWS WHERE INDICATED ON PLANS.	CEILING

12-VOLT SYSTEM VOLTAGE DROP TABLE

MAXIMUM LENGTH OF RUN IN FEET

TOTAL WATTS ON WIRE RUN	WIRE GAUGE 12	10	8	6
6	378	600	955	1518
7	324	515	818	1301
8	283	450	716	1138
10	226	360	570	910
12	178	283	450	715
14	162	257	409	650
16	133	212	338	538
18	119	189	300	477
20	113	180	286	455
21	108	171	273	434
24	89	141	225	357
25	86	136	216	344
30	75	120	190	303
35	65	103	164	260
40	53	85	135	214
48	44	70	112	178
50	43	68	108	172
75	28	45	72	115
100	21	34	54	86
125	17	27	43	69
150	14	23	36	57
175	12	19	31	49
200	10	16	27	42
225	10	16	25	40
250	9	14	22	36
CONSTANT	2267	3604	5730	9109

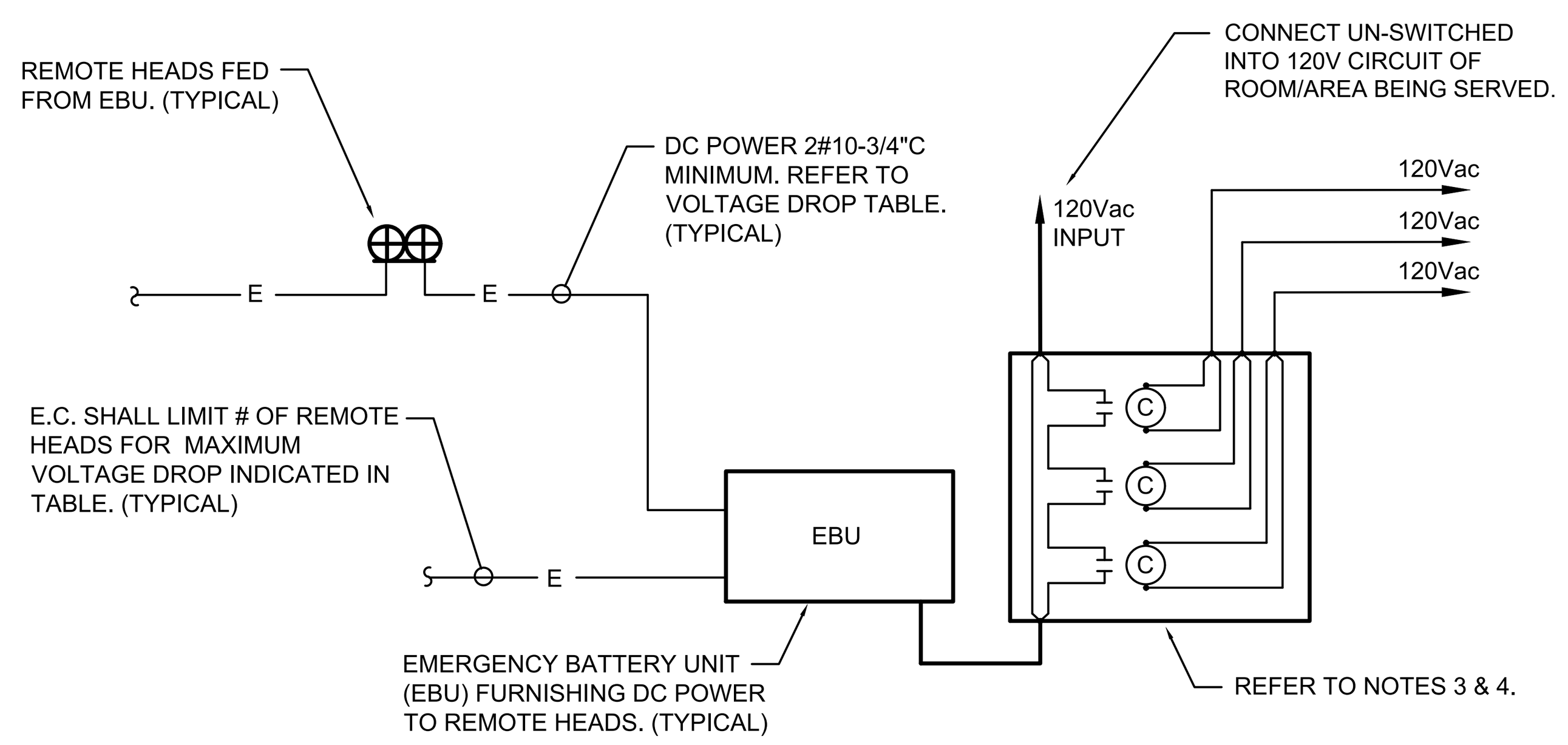

NOTES:

1. E.C. SHALL PROVIDE CIRCUIT BREAKER "LOCK-ON" DEVICE FOR ALL CIRCUITS TO EMERGENCY BATTERY UNITS (EBU). (TYPICAL)
2. DETAIL IS TYPICAL TO ALL DRAWINGS, UON.
3. RELAY PANEL WITH (3) 20A, N.O. 120V COIL RELAYS MOUNTED IN 8"x8"x4" NEMA-1 STEEL ENCLOSURE WITH HINGED COVER. RELAYS HELD CLOSED BY MONITORED LIGHTING CIRCUITS. FIELD VERIFY EXACT NUMBER OF RELAYS REQUIRED PRIOR TO WORK. MONITORED LIGHTING CIRCUITS SHALL BE CONNECTED AHEAD OF ANY SWITCHES.
4. STAIRWAY EBU'S DO NOT REQUIRE RELAY PANEL. CORRIDOR EBU'S SHALL BE CONNECTED TO THE FLOOR'S CORRIDOR CIRCUIT FOR THE RESPECTIVE FLOOR BEING SERVED. ADDITIONAL CORRIDOR CIRCUITS ON THAT FLOOR SHALL BE MONITORED PER NOTE 3 ABOVE.

TYPICAL EMERGENCY LIGHTING CONNECTION DETAIL

NOT TO SCALE

FIRE ALARM NOTES

1. E.C. SHALL PROVIDE CIRCUIT BREAKER LOCK-ON DEVICES FOR FACP AND NAC CIRCUIT.
2. E.C. SHALL FURNISH AND INSTALL REMOTE INDICATING LIGHTS/TEST SWITCHES FOR DUCT SMOKE DETECTORS.
3. REFER TO FLOOR PLANS FOR EXACT NUMBER OF DEVICES AND CANDELA RATINGS.
4. COLOR CODE WIRING PER THE LATEST EDITION OF THE STATE FIRE CODE.
5. SPLICES WILL NOT BE ALLOWED. WIRENUTS WILL NOT BE ALLOWED.
6. RED PAINTED TERMINAL CABINETS & BOXES WITH LOCKABLE COVERS SHALL BE PROVIDED AT ALL JUNCTION POINTS.
7. AFC FIRE ALARM / CONTROL CABLE TYPE MC (UL LISTED) MAY BE USED ABOVE CEILINGS AND IN CONCEALED AREAS WHERE ACCEPTABLE TO THE LOCAL AUTHORITY HAVING JURISDICTION. EXPOSED AREAS SHALL BE EMT, PAINTED PER ARCHITECTS DIRECTION. ALL CONDUCTORS SHALL BE A MINIMUM OF #16AWG SOLID COPPER, TYPE THHN, THWN OR TFN. ALL WIRING SHALL RUN CONTINUOUSLY FROM DEVICE TO DEVICE.
8. THE CONTRACTOR AT COMPLETETION OF THE FIRE ALARM SYSTEM SHALL TEST THE ENTIRE SYSTEM PER THE LOCAL FIRE DEPARTMENTS REQUIREMENTS. THE CONTRACTOR SHALL REPLACE OR FIX ANY PART OF THE SYSTEM NOT PROPERLY WORKING.
9. THE MINIMUM SEPARATION BETWEEN THE OUTGOING AND RETURN FIRE ALARM CIRCUITS SHALL BE A MINIMUM OF 1-FOOT VERTICALLY AND 4-FEET HORIZONTALLY IN ACCORDANCE WITH THE PROVISIONS OF NFPA-72.
10. ALL FIRE ALARM SYSTEM COMPONENTS & MOUNTING HEIGHTS SHALL COMPLY WITH ADA REQUIREMENTS.
11. E.C. SHALL PROVIDE ANY AND ALL AUXILARY EQUIPMENT IN ORDER TO PROVIDE A COMPLETE, PROPERLY FUNCTIONING SYSTEM. COORDINATE REQUIREMENTS WITH LOCAL MANUFACTURERS REP.
12. ALL FIRE ALARM STROBE SIGNAL DEVICES SHALL BE SYNCHRONIZED TYPE DEVICES AND COMPLY WITH ADA REQUIREMENTS.
13. NO T-TAPPING OF FIRE ALARM WIRING SHALL BE ALLOWED. (TYPICAL)
14. ALL FIRE ALARM WIRING & RACEWAY SHALL BE SUPPORTED BY THE BUILDING STRUCTURE AND SHALL NOT BE LOCATED AS TO BE DAMAGED BY BUILDING USE.
15. PROVIDE A WEATHER-PROOF KNOX-BOX 3200 SERIES ON THE EXTERIOR OF THE BUILDING. COORDINATE EXACT LOCATION WITH LOCAL FIRE DEPARTMENT.
16. ALL SMOKE DETECTORS SHALL BE MOUNTED ON THE CEILING AND UL LISTED FOR CEILING MOUNTING AND LOCATED NOT LESS THAN 12-INCHES FROM ANY WALL. DETECTORS SHALL NOT BE IN A DIRECT AIR FLOW NOR CLOSER THAN 3-FEET FROM ANY AIR SUPPLY DIFFUSER. (TYPICAL)
17. UL LISTED INSULATED THROAT, SET SCREW CONNECTORS SHALL BE USED WITH MC CABLE INSTALLATIONS, (CLAMP CONNECTORS ARE NOT ALLOWED). A CABLE CUTTING TOOL WITH CONTROLLED DEPTH OF CUT SHALL BE USED IN ALL MC CABLE INSTALLATIONS.
18. FAULT ISOLATION MODULES SHALL BE INSTALLED FOR EVERY 25 DEVICES AND IN NO CASE SHALL THE LENGTH OF AN AREA BE DISABLED BY A WIRE-TO-WIRE SHORT CIRCUIT FAULT EXCEED 200' IN ANY ONE DIRECTION. WHERE A SINGLE CIRCUIT SERVES MORE THAN ONE FLOOR; FAULT ISOLATION MODULES SHALL BE INSTALLED TO PREVENT A WIRE-TO-WIRE SHORT CIRCUIT FAULT ON ONE FLOOR TO DISABLE THE CIRCUIT ON ANOTHER FLOOR.
19. WIRING FOR THE FIRE ALARM SYSTEM SHALL BE CLASS "A".
20. REFER TO THE SPECIFICATIONS FOR THE "SEQUENCE OF OPERATION" AND ADDITIONAL INFORMATION.
21. E.C. SHALL PRODUCE A MANUFACTURER'S COMPLETE FIRE ALARM SYSTEM ONE-LINE DIAGRAM AND ADDRESS PLAN DURING THE SHOP DRAWING SUBMITTAL PROCESS.
22. E.C. SHALL PROVIDE ALARM INDICATORS AND HVAC EQUIPMENT OVERRIDE SWITCHES MOUNTED IN UTILITY ROOMS WITH FIRE ALARM PANEL. ALL SWITCHES AND HEATING UNITS SHALL BE CLEARLY LABELED BY NUMBERS AS PER PLANS.
23. E.C. SHALL OBTAIN FROM THE LOCAL FIRE DEPARTMENT, A LIST OF FIRE ALARM ZONE CODES AND DESCRIPTIONS AND PROGRAM INTO FIRE ALARM SYSTEM AS REQUIRED.

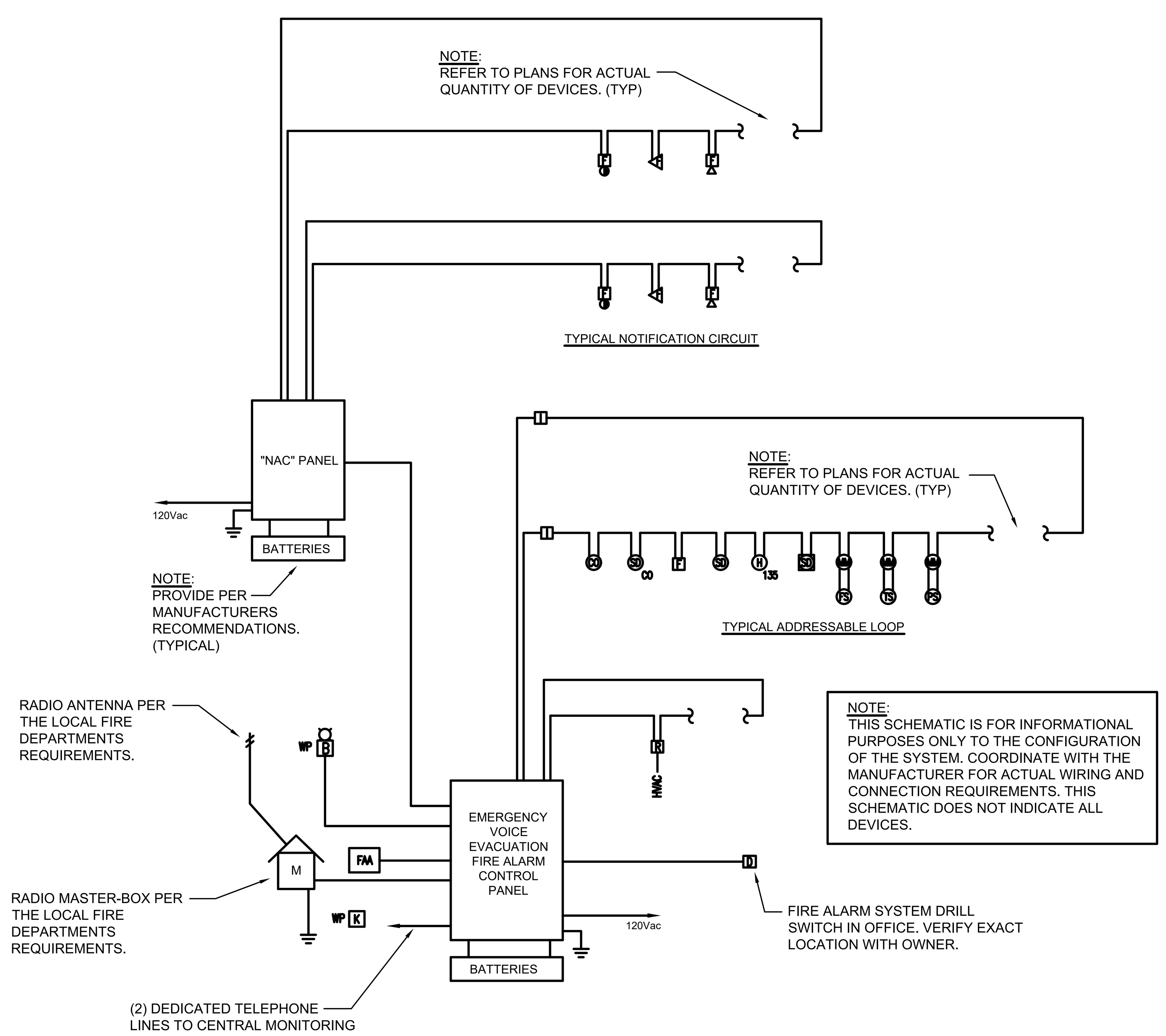

TYPICAL FIRE ALARM SCHEMATIC

NOT TO SCALE

FIRE ALARM SYMBOL LEGEND

NFPA SYMBOL	PLAN SYMBOL	DESCRIPTION	MOUNTING
	SD	FIRE ALARM SYSTEM PHOTOELECTRIC SMOKE DETECTOR.	CEILING
R	H	FIRE ALARM SYSTEM COMBINATION RATE OF RISE AND 135-DEGREES FAHRENHEIT FIXED TEMPERATURE HEAT DETECTOR.	CEILING
F	H 197	FIRE ALARM SYSTEM 197-DEGREES FAHRENHEIT FIXED TEMPERATURE HEAT DETECTOR.	CEILING
P	SD	FIRE ALARM SYSTEM DUCT SMOKE DETECTOR; INSTALLED BY HVAC CONTRACTOR & FURNISHED AND WIRED BY ELECTRICAL CONTRACTOR.	CEILING
	FS	FIRE SPRINKLER SYSTEM FLOW SWITCH; FURNISHED & INSTALLED BY F.P. CONTRACTOR AND WIRED BY ELECTRICAL CONTRACTOR INTO THE FIRE ALARM SYSTEM VIA AN INDIVIDUAL ADDRESSABLE MONITOR MODULE.	VALVE
	TS	FIRE SPRINKLER SYSTEM TAMPER SWITCH; FURNISHED & INSTALLED BY F.P. CONTRACTOR AND WIRED BY ELECTRICAL CONTRACTOR INTO THE FIRE ALARM SYSTEM VIA AN INDIVIDUAL ADDRESSABLE MONITOR MODULE.	VALVE
	PS	FIRE SPRINKLER SYSTEM PRESSURE SWITCH; FURNISHED & INSTALLED BY F.P. CONTRACTOR AND WIRED BY ELECTRICAL CONTRACTOR INTO THE FIRE ALARM SYSTEM VIA AN INDIVIDUAL ADDRESSABLE MONITOR MODULE.	VALVE
R	R	FIRE ALARM SHUT DOWN RELAY.	
P	F	FIRE ALARM SYSTEM MANUAL DOUBLE ACTION PULL STATION.	48" AFF TO TOP OF HANDLE.
75cd	F 75cd	FIRE ALARM SYSTEM STROBE. ALL STROBES SHALL BE SYNCHRONIZED AND COMPLY WITH ADA. "75cd" INDICATES CANDELA RATING OF STROBE.	80" AFF
	75cd LF F WP	FIRE ALARM SYSTEM AUDIBLE/STROBE. ALL AUDIBLE/STROBES SHALL BE SYNCHRONIZED AND COMPLY WITH ADA. "WP" INDICATES TO PROVIDE WEATHER-PROOF DEVICE. "LF" INDICATES HORN SHALL BE 520Hz LOW-FREQUENCY TYPE DEVICE. "75cd" INDICATES CANDELA RATING OF STROBE.	80" AFF
	75cd LF F WP	FIRE ALARM SYSTEM CEILING TYPE AUDIBLE/STROBE. ALL AUDIBLE/STROBES SHALL BE SYNCHRONIZED AND COMPLY WITH ADA. "WP" INDICATES TO PROVIDE WEATHER-PROOF DEVICE. "LF" INDICATES HORN SHALL BE 520Hz LOW-FREQUENCY TYPE DEVICE.	CEILING
	F LF	FIRE ALARM SYSTEM AUDIBLE ONLY. ALL AUDIBLE DEVICES SHALL BE SYNCHRONIZED AND COMPLY WITH ADA. "LF" INDICATES HORN SHALL BE 520Hz LOW-FREQUENCY TYPE DEVICE.	80" AFF
M	F LF	FIRE ALARM SYSTEM CEILING TYPE MINI-AUDIBLE/STROBE. ALL AUDIBLE DEVICES SHALL BE SYNCHRONIZED AND COMPLY WITH ADA. "LF" INDICATES HORN SHALL BE 520Hz LOW-FREQUENCY TYPE DEVICE.	CEILING
AOM	CM	FIRE ALARM SYSTEM CONTROL MODULE.	
AIM	MM	FIRE ALARM SYSTEM MONITOR MODULE.	
RTS	RTS	FIRE ALARM SYSTEM DEVICE REMOTE TEST STATION WITH LED INDICATING LIGHT.	
RIL	RIL	FIRE ALARM SYSTEM DEVICE WITH LED INDICATING LIGHT TO DISPLAY ALARM CONDITION OF REMOTE DETECTOR. CENTER ABOVE DOOR.	
MB	M	FIRE ALARM MASTER BOX.	
K	K	WEATHER-PROOF KNOX-BOX. LOCATE PER LOCAL AHJ.	
WP	B WP	FIRE ALARM SYSTEM BEACON. "WP" INDICATES TO PROVIDE WEATHER-PROOF DEVICE.	
F/SD	F/SD	FIRE / SMOKE DAMPER PROVIDED BY THE MECHANICAL CONTRACTOR. THE ELECTRICAL CONTRACTOR SHALL PROVIDE AN INDIVIDUAL FIRE ALARM SYSTEM CONTROL RELAY MODULE AND TIE-IN DAMPER INTO THE FIRE ALARM SYSTEM. PROVIDE 120VAC POWER SUPPLY CIRCUIT AS REQUIRED.	
FACP	FACP	ADDRESSABLE FIRE ALARM CONTROL UNIT (PANEL).	
FAA	FAA	REMOTE FIRE ALARM ANNUNCIATOR (PANEL).	
NAC	NAC	FIRE ALARM SYSTEM NOTIFICATION APPLIANCE CIRCUIT EXTENDER PANEL (BOOSTER).	
	DH	LOW VOLTAGE MAGNETIC DOOR HOLDER TIE INTO THE FIRE ALARM SYSTEM VIA AN INDIVIDUAL CONTROL RELAY MODULE.	
CO	CO	CARBON MONOXIDE DETECTOR WITH TEMPORAL 4 ALARM CONNECTED TO THE FIRE ALARM SYSTEM. ALL FUEL BURNING EQUIPMENT SHALL BE SHUT DOWN VIA A FIRE ALARM SYSTEM CONTROL RELAY MODULE UPON DETECTION OF CARBON MONOXIDE.	CEILING
	SD CO	FIRE ALARM SYSTEM MULTI-CRITERIA COMBINATION SMOKE & CARBON MONOXIDE DETECTOR WITH SEPARATE AUDIBLE ALARM PATTERNS (TEMPORAL 3 FOR FIRE AND TEMPORAL 4 FOR CARBON MONOXIDE).	CEILING

ARCHITECTS
Saccoccio & Associates, Inc.
1085 Park Avenue
Cranston, Rhode Island
02910
tel 401.942.7970
fax 401.942.7975

Consultant
ENGINEERING DESIGN SERVICES INCORPORATED
141 Industrial Highway Slatersville, RI 02876
Tel (401) 765-7659 Fax (401) 765-2984

Education Center, Animal Building, & Pavilion

ROGER WILLIAMS PARK ZOO
100 ELMWOOD AVENUE
PROVIDENCE, RI 02907

Revision Schedule	
Revision Number	Revision Date

Issued for Bid
08/19/2024

SHEET TITLE

ELECTRICAL LIFE SAFETY DIAGRAMS & LEGENDS

DRAWN BY:	SPC	JOB NUMBER:	18050
CHECKED BY:	RWD	DATE:	08/19/2024

E0.3

SHEET: OF:

LIGHTING COMMISSIONING NOTES:

1. PROVIDE SYSTEM START-UP AND COMMISSIONING THAT SHALL INCLUDE SYSTEMS FOR LIGHTING CONTROL EQUIPMENT, PANELS, POWER-PACKS, DIMMING CONTROLLERS, DIMMER SWITCHES, TIMECLOCKS, RELAYS, EMERGENCY LIGHTING POWER CONTROLLERS, EMERGENCY LIGHTING INVERTER BATTERY SYSTEMS, PHOTOCELL CONTROLS, TIME-SWITCHES, SWITCHES, OCCUPANCY SENSORS, VACANCY SENSORS, COLOR (KELVIN) TUNING AND WIRING. THE SYSTEM START-UP AND COMMISSIONING SHALL INCLUDE BUT NOT BE LIMITED TO VERIFYING EQUIPMENT SELECTION ARE CORRECT FOR THE PROJECT'S DESIGN INTENT, EQUIPMENT INSTALLATION, OVERSEEING FUNCTIONAL TESTING, OWNER TRAINING, AND WARRANTY REVIEW WITHIN 10-MONTHS OF SUBSTANTIAL COMPLETION. THE CONTRACTOR AND LIGHTING CONTROLS MANUFACTURER SHALL COORDINATE WITH THE OWNER ON ALL OPERATION TIMES, SET POINTS, SENSITIVITY SETTINGS AND DELAY SETTINGS AND PROGRAM SYSTEMS ACCORDINGLY. THE LIGHTING CONTROLS MANUFACTURER SHALL REVIEW SHOP DRAWINGS FOR DIMMING BALLASTS AND DRIVERS TO BE USED AND VERIFY IN WRITING THE ASSOCIATED CONTROLS ARE COMPATIBLE WITH SUCH DIMMING BALLASTS AND DRIVERS. AT A MINIMUM, THREE SITE VISITS AND/OR MEETINGS SHALL BE REQUIRED AND SHALL BE INCLUDED AS PART OF THIS PROJECTS SCOPE OF WORK. IF FINDINGS, NON-ACCESS TO REVIEW SYSTEM OR CONCLUSIONS REQUIRE ADDITIONAL SITES VISITS, THEN THEY SHALL BE PROVIDED AT NO ADDITIONAL COST TO THE OWNER.

a) PRE-INSTALLATION VISIT: MANUFACTURER SHALL PROVIDE A FACTORY AUTHORIZED TECHNICIAN TO CONFIRM PROPER PLACEMENT OF ALL LIGHTING CONTROL SYSTEM COMPONENTS AND VERIFY HIGHLY REFLECTIVE FINISHES, UNFORESEEN ARCHITECTURAL OBSTRUCTIONS, FURNITURE PLACEMENT, PENDANT LIGHTING FIXTURE HEIGHTS, WINDOWS AND WINDOW FINISHES, ETC.. WILL NOT IMPACT THE PROPER FUNCTION OF THE SYSTEM.

b) CONSTRUCTION VISIT: MANUFACTURER SHALL PROVIDE A FACTORY AUTHORIZED TECHNICIAN TO REVIEW WIRING AND INSTALLATION METHODS WITH INSTALLING CONTRACTOR.

c) START-UP COMMISSIONING VISIT SHALL INCLUDE THE FOLLOWING:
- THAT ALL CONTROL STATIONS, SWITCHES, OCCUPANCY SENSORS, VACANCY SENSORS AND DAY-LIGHTING SENSORS ARE LOCATED, INSTALLED, AND ADJUSTED AS INTENDED BY THE FACTORY AND THE CONTRACT DOCUMENTS.
- THE OCCUPANCY/VACANCY SENSORS AND DAY-LIGHTING SENSORS ARE OPERATING WITHIN THE MANUFACTURERS SPECIFICATIONS.
- THE SENSORS AND RELAY PANELS INTERACT AS A COMPLETE AND OPERATIONAL SYSTEM TO MEET THE DESIGN INTENT.
- MANUFACTURER TO PROVIDE A WRITTEN STATEMENT VERIFYING THAT THE SYSTEM MEETS THE ABOVE REQUIREMENTS.
- CONFIRMS THAT ALL INPUT AND OUTPUTS ARE CORRECT AND FUNCTIONAL, WIRING IS COMPLETE TO THE END DEVICE AND THE END DEVICE FUNCTIONS PROPERLY.
- TESTING THAT THE SYSTEM PROGRAMMING IS FUNCTIONAL AND SATISFIES THE DESIGN INTENT AND OWNER'S REQUIREMENTS. TESTING THE SYSTEM IN ALL MODES OF OPERATION, INCLUDING PROPER OPERATION DURING AND RECOVERY FROM LOSS OF BUILDING POWER.

2. SYSTEM TRAINING:
- MANUFACTURER SHALL PROVIDE FACTORY AUTHORIZED TECHNICIAN TO TRAIN OWNER PERSONNEL IN THE OPERATION, PROGRAMMING AND MAINTENANCE OF THE LIGHTING CONTROL SYSTEM INCLUDING ALL OCCUPANCY SENSORS, DAY-LIGHTING CONTROLS, ROOM CONTROLLERS, CONTROLLED PLUG-LOADS, SWITCHES, ETC..

3. SYSTEM PROGRAMMING:
- MANUFACTURER SHALL PROVIDE FACTORY AUTHORIZED TECHNICIAN FOR SYSTEM PROGRAMMING INCLUDING:
- WIRING DOCUMENTATION.
- SWITCH OPERATION.

4. FUNCTIONAL TESTING:
- ENSURE THAT CONTROL HARDWARE AND SOFTWARE ARE CALIBRATED, ADJUSTED, PROGRAMMED AND IN PROPER WORKING CONDITION IN ACCORDANCE WITH THE CONSTRUCTION DOCUMENTS AND MANUFACTURER'S INSTRUCTIONS.
- ENSURE ALL DEVICES ARE TESTED AND OPERATE AS INTENDED
- PROVIDE A REPORT THAT ALL PARTS OF THE LIGHTING CONTROL SYSTEMS HAVE BEEN TESTED AND OPERATE AS INTENDED.

5. CLOSEOUT:
AFTER ALL TESTING AND VERIFICATION IS COMPLETE, THE CONTRACTOR SHALL PROVIDE A COMPLETED CHECKLIST OF ALL SYSTEMS INSTALLED, AS-BUILT DRAWINGS, OPERATION AND MAINTENANCE MANUALS, RECORDS OF FINAL SETTINGS TO THE OWNER OR AUTHORIZED AGENT WITHIN 90 DAYS OF THE DATE OF RECEIPT OF THE CERTIFICATE OF OCCUPANCY. THE FOLLOWING INFORMATION SHALL BE INCLUDED IN THE CLOSEOUT DOCUMENTS:

a) AS-BUILT DRAWINGS:
CONSTRUCTION DOCUMENTS SHALL INCLUDE THE LOCATION AND CATALOGUE NUMBER OF EACH PIECE OF EQUIPMENT.

b) MANUALS:
AN OPERATING AND MAINTENANCE MANUAL SHALL BE PROVIDED AND INCLUDE THE FOLLOWING:
NAME AND ADDRESS OF NOT LESS THAN ONE SERVICE AGENCY FOR INSTALLED EQUIPMENT.
A NARRATIVE OF HOW EACH SYSTEM IS INTENDED TO OPERATE, INCLUDING RECOMMENDED SETPOINTS.
SUBMITTAL DATA INDICATING ALL SELECTED OPTIONS FOR EACH PIECE OF LIGHTING EQUIPMENT AND LIGHTING CONTROLS.
OPERATION AND MAINTENANCE MANUALS FOR EACH PIECE OF LIGHTING EQUIPMENT. REQUIRED ROUTINE MAINTENANCE ACTIONS, CLEANING AND RECOMMENDED RE-LAMPING SHALL BE CLEARLY IDENTIFIED.
A SCHEDULE FOR INSPECTING AND RECALIBRATING ALL LIGHTING CONTROLS.

c) REPORT:
A REPORT OF TEST RESULTS SHALL BE PROVIDED AND INCLUDE THE FOLLOWING:
RESULTS OF FUNCTIONAL PERFORMANCE TESTS.
DISPOSITION OF DEFICIENCIES FOUND DURING TESTING, INCLUDING DETAILS OF CORRECTIVE MEASURES USED OR PROPOSED.

LIGHTING FIXTURE NOTES

NOTES:

1. ALL LIGHT FIXTURES SHALL BE PROVIDED WITH LED LAMPS INSTALLED READY FOR OPERATION. ALL LED LAMPS SHALL HAVE THE SAME COLOR TEMPERATURE FROM A SINGLE LAMP MANUFACTURER UNLESS OTHERWISE DIRECTED BY THE ARCHITECT, OWNER, AND/OR LIGHTING DESIGNER.

2. THE ELECTRICAL CONTRACTOR SHALL ALLOW TIME FOR DIRECTIONAL ADJUSTMENT OF ALL LIGHT FIXTURES AS DIRECTED BY ARCHITECT, OWNER, ENGINEER AND/OR LIGHTING DESIGNER.

3. THE ELECTRICAL CONTRACTOR SHALL COORDINATE WITH THE LIGHTING FIXTURE MANUFACTURER AND LIGHTING CONTROLS MANUFACTURER TO PROVIDE COMPATIBLE COMPONENTS BETWEEN LIGHTING FIXTURE AND ASSOCIATED CONTROLS. (TYPICAL)

4. THE ELECTRICAL CONTRACTOR SHALL COORDINATE AND VERIFY THE LIGHTING FIXTURE DESIGNATIONS & SPECIFICATIONS WITH THE ARCHITECT FOR ALL MODEL NUMBERS, REQUIRED LAMPS TYPES, WATTAGE, COLOR TEMPERATURE, FOOTCANDLE LEVELS, ETC,, PRIOR TO BID. THIS SCHEDULE IS FOR INFORMATIONAL PURPOSES ONLY AND DOES NOT IMPLY OR WARRANT THE LIGHTING FIXTURE DESIGN INTENT. (TYPICAL)

NOTES:

1. PROVIDE MOUNTING BRACKET AS REQUIRED. (TYPICAL)

2. THIS DIAGRAM SHALL APPLY TO EXTERIOR DOOR ENTRY LIGHTING FIXTURES.

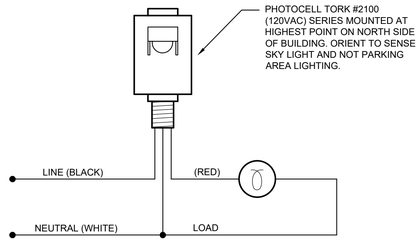

SITE LIGHTING CONTROL DIAGRAM
PHOTOCELL ONLY
NOT TO SCALE

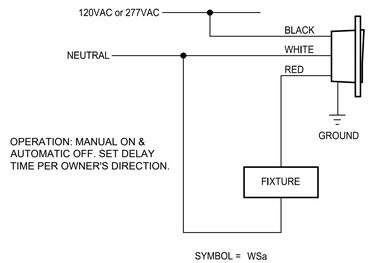

TYPICAL DIAGRAM FOR "WS" SENSOR
NOT TO SCALE

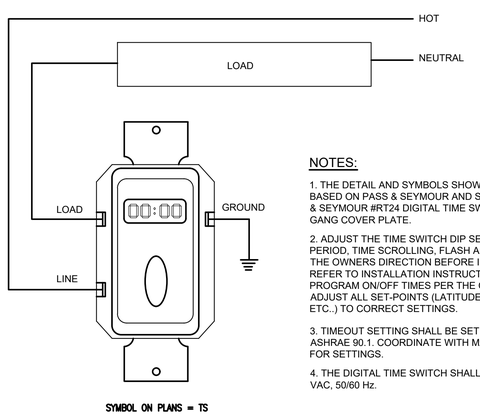

NOTES:

1. THE DETAIL AND SYMBOLS SHOWN ON THE PLANS ARE BASED ON PASS & SEYMOUR AND SHALL BE EQUAL TO PASS & SEYMOUR #RT24 DIGITAL TIME SWITCH . PROVIDE SINGLE GANG COVER PLATE.

2. ADJUST THE TIME SWITCH DIP SETTINGS FOR TIMEOUT PERIOD, TIME SCROLLING, FLASH AND BEEPER OPTIONS PER THE OWNERS DIRECTION BEFORE INSTALLING THE SWITCH. REFER TO INSTALLATION INSTRUCTIONS FOR DETAILS. PROGRAM ON/OFF TIMES PER THE OWNER'S DIRECTION AND ADJUST ALL SET-POINTS (LATITUDE, TIME OF DAY, DATE, ETC..) TO CORRECT SETTINGS.

3. TIMEOUT SETTING SHALL BE SET TO COMPLY WITH ASHRAE 90.1. COORDINATE WITH MANUFACTURER & OWNER FOR SETTINGS.

4. THE DIGITAL TIME SWITCH SHALL BE RATED FOR 120/277 VAC, 50/60 Hz.

DIGITAL TIME SWITCH DETAIL
NOT TO SCALE

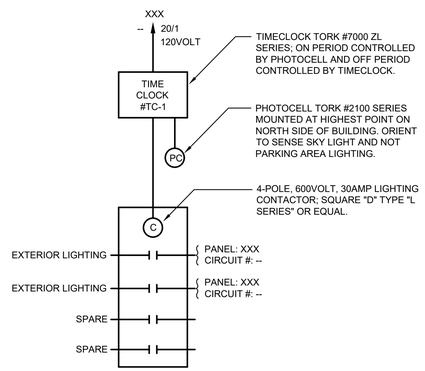

CONTACTOR #TC-1

SITE LIGHTIING CONTROL DIAGRAM
NOT TO SCALE

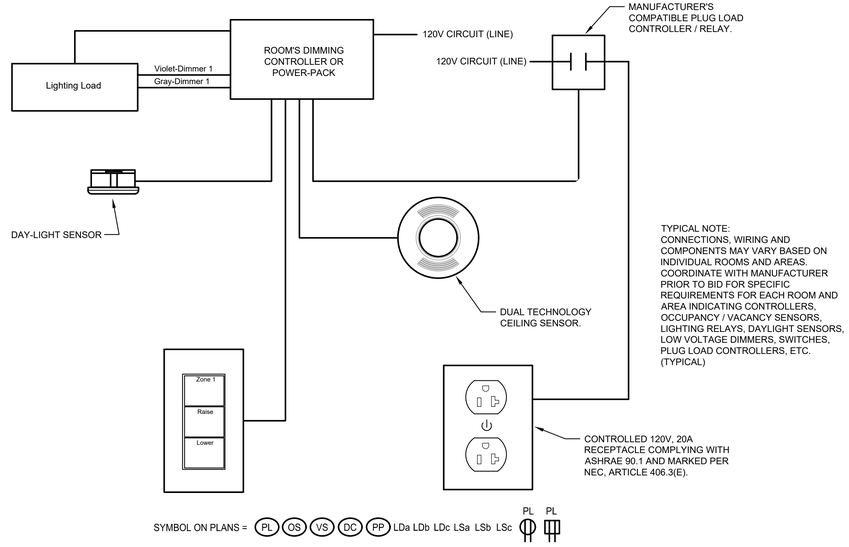

TYPICAL WIRING DIAGRAM FOR ROOM CONTROLLER SYSTEM
NOT TO SCALE

ARCHITECTS
Saccoccio & Associates, Inc.
1085 Park Avenue
Cranston, Rhode Island 02910
tel 401.942.7970
fax 401.942.7975
Consultant
ENGINEERING DESIGN SERVICES INCORPORATED
149 Pennsylvania Avenue, Warwick, RI 02879
Tel (401) 765-7500 Fax (401) 765-2954

Education Center, Animal Building, & Pavilion

ROGER WILLIAMS PARK ZOO
100 ELMWOOD AVENUE
PROVIDENCE, RI 02907

Revision Schedule	
Revision Number	Revision Date

Issued for Bid
08/19/2024

SHEET TITLE

ELECTRICAL LIGHTING CONTROL DIAGRAMS

DRAWN BY:	SPC	JOB NUMBER:	18050
CHECKED BY:	RWD	DATE:	08/19/2024

E0.4

SHEET: OF:

MECHANICAL EQUIPMENT ELECTRICAL CONNECTION SCHEDULE

XX # ITEM No.	DESCRIPTION	EQUIPMENT CHARACTERISTICS					CIRCUIT	CIRCUIT BREAKER (HACR TYPE)	FEEDER & CONDUIT	DISCONNECT SWITCH				MANUAL MOTOR CONTROLLER
		CFM	VOLTS	PH	FREQ.	MCA				SIZE	FUSE	POLES	NEMA	
ERU-1	ENERGY RECOVERY UNIT	5400	208	3	60	218.1	MDP-ED	225/3	3#250kcmil + 1#4G IN 3"C.	400	225	3	3R	NEMA-3R MAGNETIC MOTOR STARTER.
HPU-100	HEAT PUMP (2 CONNECTIONS)	N/A	208	3	60	55	MDP-ED	60/3	3#1 + 1#6G IN 1-1/2"C.	60	60	3	3R	NEMA-3R MAGNETIC MOTOR STARTER.
		N/A	208	3	60	56	MDP-ED	60/3	3#1 + 1#6G IN 1-1/2"C.	60	60	3	3R	NEMA-3R MAGNETIC MOTOR STARTER.
HPU-200	HEAT PUMP (1 CONNECTION)	N/A	208	3	60	60	MDP-ED	60/3	3#1 + 1#6G IN 1-1/2"C.	60	60	3	3R	NEMA-3R MAGNETIC MOTOR STARTER.
FC-101	FAN COIL UNIT	600	208	1	60	2.9	P-1A / 29,31	15/2	2#12 + 1#12G IN 3/4"C.	30	15	2	1	MAGNETIC MOTOR STARTER
FC-102	FAN COIL UNIT	880	208	1	60	2.1			2#12 + 1#12G IN 3/4"C.	30	15	2	3R	MAGNETIC MOTOR STARTER
FC-103	FAN COIL UNIT	880	208	1	60	2.1	P-1A / 33,35	15/2	2#12 + 1#12G IN 3/4"C.	30	15	2	1	MAGNETIC MOTOR STARTER
FC-104	FAN COIL UNIT	880	208	1	60	2.9			2#12 + 1#12G IN 3/4"C.	30	15	2	3R	MAGNETIC MOTOR STARTER
FC-105	FAN COIL UNIT	880	208	1	60	2.9	P-1A / 37,39	15/2	2#12 + 1#12G IN 3/4"C.	30	15	2	1	MAGNETIC MOTOR STARTER
FC-106	FAN COIL UNIT	880	208	1	60	2.9			2#12 + 1#12G IN 3/4"C.	30	15	2	3R	MAGNETIC MOTOR STARTER
FC-107	FAN COIL UNIT	230	208	1	60	2.9			2#12 + 1#12G IN 3/4"C.	30	15	2	1	MAGNETIC MOTOR STARTER
FC-108	FAN COIL UNIT	330	208	1	60	2.9	P-1A / XXX	15/2	2#12 + 1#12G IN 3/4"C.	30	15	2	1	MAGNETIC MOTOR STARTER
FC-109	FAN COIL UNIT	210	208	1	60	0.3			2#12 + 1#12G IN 3/4"C.	30	15	2	3R	MAGNETIC MOTOR STARTER
FC-110	FAN COIL UNIT	670	208	1	60	0.3			2#12 + 1#12G IN 3/4"C.	30	15	2	1	MAGNETIC MOTOR STARTER
FC-111	FAN COIL UNIT	670	208	1	60	2.9			2#12 + 1#12G IN 3/4"C.	30	15	2	3R	MAGNETIC MOTOR STARTER
FC-201	FAN COIL UNIT	330	208	1	60	0.3	P-2A / 13,15	15/2	2#12 + 1#12G IN 3/4"C.	30	15	2	3R	MAGNETIC MOTOR STARTER
FC-202	FAN COIL UNIT	210	208	1	60	1.2			2#12 + 1#12G IN 3/4"C.	30	15	2	1	MAGNETIC MOTOR STARTER
FC-203	FAN COIL UNIT	210	208	1	60	1.2	P-2A / 17,19	15/2	2#12 + 1#12G IN 3/4"C.	30	15	2	1	MAGNETIC MOTOR STARTER
FC-204	FAN COIL UNIT	230	208	1	60	0.2			2#12 + 1#12G IN 3/4"C.	30	15	2	3R	MAGNETIC MOTOR STARTER
FC-205	FAN COIL UNIT	230	208	1	60	0.2			2#12 + 1#12G IN 3/4"C.	30	15	2	1	MAGNETIC MOTOR STARTER
FC-206	FAN COIL UNIT	230	208	1	60	0.2	P-2A / 21,23	15/2	2#12 + 1#12G IN 3/4"C.	30	15	2	3R	MAGNETIC MOTOR STARTER
FC-207	FAN COIL UNIT	670	208	1	60	0.5			2#12 + 1#12G IN 3/4"C.	30	15	2	3R	MAGNETIC MOTOR STARTER
FC-208	FAN COIL UNIT	230	208	1	60	0.2	P-2A / 25,27	15/2	2#12 + 1#12G IN 3/4"C.	30	15	2	3R	MAGNETIC MOTOR STARTER
FC-209	FAN COIL UNIT	230	208	1	60	0.2			2#12 + 1#12G IN 3/4"C.	30	15	2	3R	MAGNETIC MOTOR STARTER
FC-210	FAN COIL UNIT	230	208	1	60	0.2			2#12 + 1#12G IN 3/4"C.	30	15	2	3R	MAGNETIC MOTOR STARTER
FC-211	FAN COIL UNIT	230	208	1	60	0.2			2#12 + 1#12G IN 3/4"C.	30	15	2	3R	MAGNETIC MOTOR STARTER
FC-212	FAN COIL UNIT	230	208	1	60	0.2	P-2A / 57,59	15/2	2#12 + 1#12G IN 3/4"C.	30	15	2	3R	MAGNETIC MOTOR STARTER
FC-213	FAN COIL UNIT	230	208	1	60	4.3			2#12 + 1#12G IN 3/4"C.	30	15	2	3R	MAGNETIC MOTOR STARTER
BC-100	BRANCH CONTROLLER	N/A	208	1	60	1.6	P-1A / 60,62	15/2	2#12 + 1#12G IN 3/4"C.	30	15	2	3R	MAGNETIC MOTOR STARTER
BC-200	BRANCH CONTROLLER	N/A	208	1	60	1.6	P-2A / 53,55	15/2	2#12 + 1#12G IN 3/4"C.	30	15	2	3R	MAGNETIC MOTOR STARTER

NOTES:
1. COORDINATE WITH HVAC CONTRACTOR FOR EXACT LOCATIONS OF ALL MECHANICAL EQUIPMENT PRIOR TO INSTALLING ELECTRICAL COMPONENTS.

MECHANICAL EQUIPMENT ELECTRICAL CONNECTION SCHEDULE

XX # ITEM No.	DESCRIPTION	EQUIPMENT CHARACTERISTICS					CIRCUIT	CIRCUIT BREAKER (HACR TYPE)	FEEDER & CONDUIT	DISCONNECT SWITCH				MANUAL MOTOR CONTROLLER
		CFM	VOLTS	PH	FREQ.	MCA				SIZE	FUSE	POLES	NEMA	
VAV-1	VARIABLE AIR VOLUME UNIT	470	120	1	60	-	P-1A / 12	15/1	2#12 + 1#12G IN 3/4"C.	30	15	1	1	MOTOR RATED TOGGLE SWITCH / STARTER WITH THERMAL OVERLOADS
VAV-2	VARIABLE AIR VOLUME UNIT	450	120	1	60	-			2#12 + 1#12G IN 3/4"C.	30	15	1	1	MOTOR RATED TOGGLE SWITCH / STARTER WITH THERMAL OVERLOADS
VAV-3	VARIABLE AIR VOLUME UNIT	450	120	1	60	-	P-1A / 14	15/1	2#12 + 1#12G IN 3/4"C.	30	15	1	1	MOTOR RATED TOGGLE SWITCH / STARTER WITH THERMAL OVERLOADS
VAV-4	VARIABLE AIR VOLUME UNIT	450	120	1	60	-			2#12 + 1#12G IN 3/4"C.	30	15	1	1	MOTOR RATED TOGGLE SWITCH / STARTER WITH THERMAL OVERLOADS
VAV-5	VARIABLE AIR VOLUME UNIT	450	120	1	60	-	P-1A / 16	15/1	2#12 + 1#12G IN 3/4"C.	30	15	1	1	MOTOR RATED TOGGLE SWITCH / STARTER WITH THERMAL OVERLOADS
SAC-1	A/C INDOOR UNIT	424	208	1	60	1	FEED FROM "SCU-1"		2#12 + 1#12G IN 3/4"C.	30	15	2	1	MAGNETIC MOTOR STARTER
SCU-1	A/C OUTDOOR UNIT	N/A	208	1	60	10	P-2A / 31,33	15/2	2#12 + 1#12G IN 3/4"C.	30	15	2	3R	NEMA-3R MAGNETIC MOTOR STARTER
WH-1	ELEC WATER HEATER	N/A	208	1	60	24	MDP-ED	30/2	3#8 + 1#8G IN 1"C.	30	30	2	3R	N/A
WH-2	ELEC WATER HEATER	N/A	208	1	60	24	MDP-ED	30/2	3#8 + 1#8G IN 1"C.	30	30	2	3R	N/A
EUH-1	ELEC UNIT HEATER	350	208	3	60	18.1	P-1A / 56,58,60	25/3	3#10 + 1#10G IN 3/4"C.	30	25	3	3R	N/A
EF-1	EXHAUST FAN	300	120	1	60	1.4	PAV-2 / 19	15/1	2#12 + 1#12G IN 3/4"C.	N/A	N/A	N/A	N/A	NEMA-3R MOTOR RATED TOGGLE SWITCH / STARTER WITH THERMAL OVERLOADS.
EF-2	EXHAUST FAN	300	120	1	60	1.4	PAV-2 / 21	15/1	2#12 + 1#12G IN 3/4"C.	N/A	N/A	N/A	N/A	NEMA-3R MOTOR RATED TOGGLE SWITCH / STARTER WITH THERMAL OVERLOADS.
CEF-1	EXHAUST FAN	300	120	1	60	0.3	PAV-2 / 23	15/1	2#12 + 1#12G IN 3/4"C.	N/A	N/A	N/A	N/A	NEMA-3R MOTOR RATED TOGGLE SWITCH / STARTER WITH THERMAL OVERLOADS.
CEF-2	EXHAUST FAN	300	120	1	60	0.3			2#12 + 1#12G IN 3/4"C.	N/A	N/A	N/A	N/A	NEMA-3R MOTOR RATED TOGGLE SWITCH / STARTER WITH THERMAL OVERLOADS.
ECL-1	ELECTRIC HEATER	300	208	1	60	14.9	PAV-2 / XXX	20/2	2#12 + 1#12G IN 3/4"C.	30	20	2	1	NEMA-1 MAGNETIC MOTOR STARTER
ECL-2	ELECTRIC HEATER	300	208	1	60	14.9	PAV-2 / XXX	20/2	2#12 + 1#12G IN 3/4"C.	30	20	2	1	NEMA-1 MAGNETIC MOTOR STARTER

NOTES:
1. COORDINATE WITH HVAC CONTRACTOR FOR EXACT LOCATIONS OF ALL MECHANICAL EQUIPMENT PRIOR TO INSTALLING ELECTRICAL COMPONENTS.

FUTURE PAVILION EQUIPMENT (NOT IN SCOPE)

MAU-1	MAKE-UP AIR UNIT	-	208	3	60	63.4	PAV-2 / 1,3,5	70/3	3#4 + 1#8G IN 1-1/2"C.	100	70	3	3R	NEMA-3R MAGNETIC MOTOR STARTER.
KEF-1	KITCHEN EXHAUST FAN	-	208	3	60	5.7	PAV-2 / 7,9,11	15/3	3#12 + 1#12G IN 3/4"C.	30	15	3	3R	NEMA-3R MAGNETIC MOTOR STARTER.
AHU-1	AIR-HANDLING UNIT	-	208	3	60	23.3	PAV-2 / 13,15,17	30/3	3#8 + 1#8G IN 1-1/4"C.	30	30	3	3R	NEMA-3R MAGNETIC MOTOR STARTER.
AHU-2	AIR-HANDLING UNIT	-	208	3	60	23.3	PAV-2 / 2,4,6	30/3	3#8 + 1#8G IN 1-1/4"C.	30	30	3	3R	NEMA-3R MAGNETIC MOTOR STARTER.
CU-1	CONDENSER UNIT	-	208	3	60	66	PAV-2 / 8,10,12	90/3	3#2 + 1#8G IN 1-1/2"C.	100	90	3	3R	NEMA-3R MAGNETIC MOTOR STARTER.
CU-2	CONDENSER UNIT	-	208	3	60	66	PAV-2 / 14,16,18	90/3	3#2 + 1#8G IN 1-1/2"C.	100	90	3	3R	NEMA-3R MAGNETIC MOTOR STARTER.
DEF-1	EXHAUST FAN	525	208	3	60	6.3	PAV-2 / 20,22,24	15/3	3#12 + 1#12G IN 3/4"C.	30	15	3	3R	NEMA-3R MAGNETIC MOTOR STARTER.

FUTURE ANIMAL BUILDING (NOT IN SCOPE)

FC-301	FAN COIL UNIT	880	208	1	60	2.9	P-1C / 2.4	15/2	2#12 + 1#12G IN 3/4"C.	30	15	2	1	MAGNETIC MOTOR STARTER
FC-302	FAN COIL UNIT	880	208	1	60	2.9			2#12 + 1#12G IN 3/4"C.	30	15	2	1	MAGNETIC MOTOR STARTER
FC-303	FAN COIL UNIT	330	208	1	60	2.1	P-1C / 6,8	15/2	2#12 + 1#12G IN 3/4"C.	30	15	2	1	MAGNETIC MOTOR STARTER
FC-304	FAN COIL UNIT	600	208	1	60	2.9			2#12 + 1#12G IN 3/4"C.	30	15	2	1	MAGNETIC MOTOR STARTER
FC-305	FAN COIL UNIT	600	208	1	60	2.9	P-1C / 10,12	15/2	2#12 + 1#12G IN 3/4"C.	30	15	2	1	MAGNETIC MOTOR STARTER
FC-306	FAN COIL UNIT	300	208	1	60	1.8			2#12 + 1#12G IN 3/4"C.	30	15	2	1	MAGNETIC MOTOR STARTER
FC-307	FAN COIL UNIT	300	208	1	60	1.8	P-1C / 14,16	15/2	2#12 + 1#12G IN 3/4"C.	30	15	2	1	MAGNETIC MOTOR STARTER
ECL-1	ELECTRIC HEATER	65	208	1	60	3.6	P-1C / 18,20	15/2	2#12 + 1#12G IN 3/4"C.	30	15	2	1	-
BC-300	BRANCH CONTROLLER	N/A	208	1	60	0.9	P-1C / 79,81	15/2	2#12 + 1#12G IN 3/4"C.	30	15	2	1	-
HPU-300	HEAT PUMP (1 CONNECTION)	N/A	208	3	60	56	P-1C / 1,3,5	60/3	3#4 + 1#4G IN 2"C.	60	60	3	3R	WP MAGNETIC MOTOR STARTER
ERU-2	ENERGY RECOVERY UNIT	1020	208	3	60	32.3	P-1C / 68,70,72	45/3	3#6 + 1#8G IN 1"C.	60	45	3	3R	NEMA-3R MAGNETIC MOTOR STARTER.
RLD-101 thru 111	REFRIGERANT LEAK DETECTOR	N/A	120	1	60	.044 ea.	P-1A / 26	15/1	2#12 + 1#12G IN 3/4"C.	N/A	N/A	N/A	N/A	RECESSED 2-GANG ELECTRICAL BOX PER MANUFACTURER'S INSTRUCTIONS FOR EACH SENSOR.
RLD-212 thru 221	REFRIGERANT LEAK DETECTOR	N/A	120	1	60	.044 ea.	P-2A / 41	15/1	2#12 + 1#12G IN 3/4"C.	N/A	N/A	N/A	N/A	RECESSED 2-GANG ELECTRICAL BOX PER MANUFACTURER'S INSTRUCTIONS FOR EACH SENSOR.

ARCHITECTS

Saccoccio & Associates, Inc.
1085 Park Avenue
Cranston, Rhode Island
02910
tel 401.942.7970
fax 401.942.7975

Consultant

ENGINEERING design SERVICES INCORPORATED

Education Center, Animal Building, & Pavilion

ROGER WILLIAMS PARK ZOO
100 ELMWOOD AVENUE
PROVIDENCE, RI 02907

Revision Schedule	
Revision Number	Revision Date

Issued for Bid
08/19/2024

SHEET TITLE

ELECTRICAL SCHEDULES & NOTES

DRAWN BY:	SPC	JOB NUMBER:	18050
CHECKED BY:	RWD	DATE:	08/19/2024

E0.5

SHEET: OF:

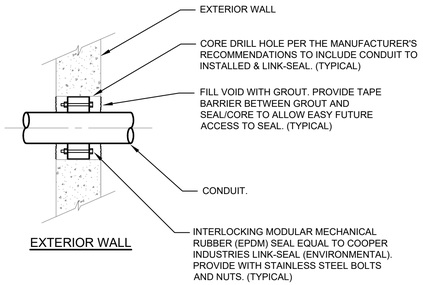

WATER TIGHT CONDUIT SEAL DETAIL
NOT TO SCALE

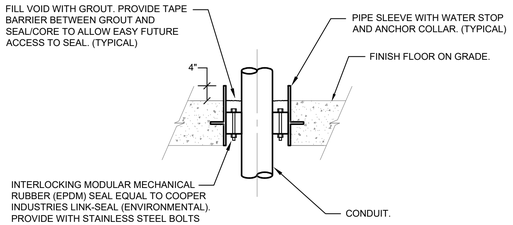

WATER TIGHT CONDUIT SEAL DETAIL
NOT TO SCALE

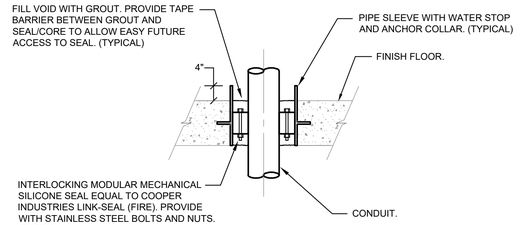

WATER TIGHT / FIRE RESISTANT CONDUIT SEAL DETAIL
NOT TO SCALE

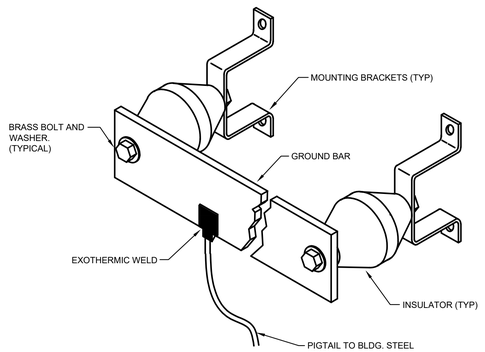

NOTES:

1. PROVIDE GROUND BAR (1/4" X 2" X 24") WITH WALL MOUNTING BRACKETS, INSULATORS AND A 25' EXOTHERMICALLY WELDED PIGTAIL (#6 AWG) IN EACH SERVER ROOM & IDF ROOM.
2. MOUNT GROUND BAR AT THE BOTTOM RIGHT CORNER ON THE PLYWOOD BACKBOARD.
3. GROUND BARS SHALL HAVE CAPACITY FOR NINE (9) GROUNDING LUGS TO BE ATTACHED.
4. CONNECT EXOTHERMICALLY WELDED PIGTAIL TO BUILDING STEEL.
5. GROUND BARS SHALL BE ELECTROLYTIC COPPER AND SHALL BE MOUNTED ON INSULATORS RATED AT 2700 VOLTS.
6. COPPER SURFACES SHALL BE SMOOTH AND WITHOUT MARKS DEEPER THAN 0.010 INCHES.
7. MANUFACTURERS SHALL BE ERICO, HARGER OR APPROVED EQUAL.

TYPICAL GROUND BAR DETAIL
NOT TO SCALE

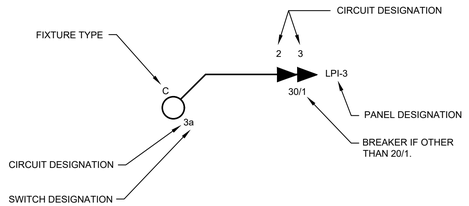

NOTES:

1. DRAWINGS ARE DIAGRAMMATIC AND INDICATE GENERAL ARRANGEMENT OF SYSTEMS AND WORK INCLUDED IN CONTRACT. INFORMATION AND COMPONENTS SHOWN ON RISER DIAGRAMS BUT NOT ON PLANS, AND VICE VERSA, SHALL APPLY OR SHALL BE PROVIDED AS THOUGH EXPRESSLY REQUIRED ON BOTH. IT IS NOT INTENDED THAT EVERY JUNCTION BOX, OFFSET, FITTING OR COMPONENT BE SPECIFIED OR SHOWN ON DRAWINGS; HOWEVER, CONTRACT DOCUMENTS REQUIRE PROVISION OF ALL COMPONENTS AND MATERIALS NECESSARY FOR COMPLETE AND OPERATIONAL ELECTRICAL INSTALLATION, WHETHER OR NOT INDICATED OR SPECIFIED.

2. BRANCH CIRCUIT WIRING MAY NOT BE GRAPHICALLY SHOWN ON DRAWINGS AND MAY BE SHOWN BY CIRCUIT NUMBERS BESIDE FIXTURES, DEVICES AND EQUIPMENT. PROVIDE COMPLETE WIRING SYSTEM WHETHER OR NOT SHOWN GRAPHICALLY. WIRING IS SHOWN BY CONDUIT RUNS ON DRAWINGS WHERE SPECIFIC ROUTING IS REQUIRED OR FOR OTHER SPECIAL REASONS. ONLY ROOMS WITH MULTIPLE SWITCHING HAVE "SWITCH CONTROL LETTERS" ASSIGNED. PROVIDE THHN CONDUCTORS IN AREAS WITH HIGH AMBIENT TEMPERATURES SUCH AS BOILER ROOMS, INCINERATOR ROOMS, MECHANICAL EQUIPMENT ROOMS ETC., FOR SIZES LARGER THAN NO. 10 AWG.

TYPICAL CIRCUITING DETAIL
NOT TO SCALE

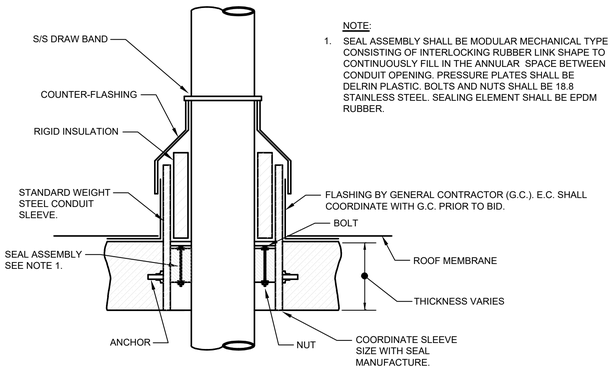

NOTE:

1. SEAL ASSEMBLY SHALL BE MODULAR MECHANICAL TYPE CONSISTING OF INTERLOCKING RUBBER LINK SHAPE TO CONTINUOUSLY FILL IN THE ANNULAR SPACE BETWEEN CONDUIT OPENING. PRESSURE PLATES SHALL BE DELRIN PLASTIC. BOLTS AND NUTS SHALL BE 18.8 STAINLESS STEEL. SEALING ELEMENT SHALL BE EPDM RUBBER.

TYPICAL CONDUIT THRU ROOF DETAIL
NOT TO SCALE

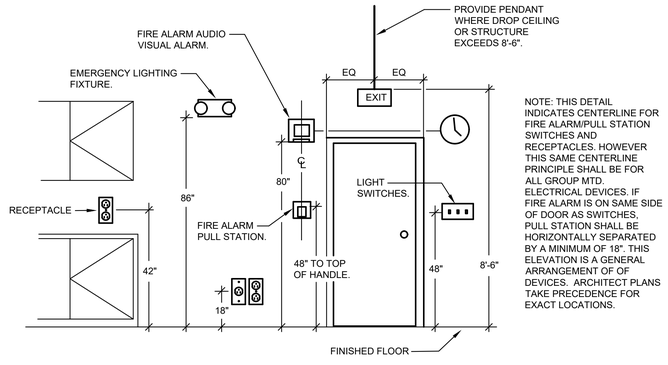

NOTE: THIS DETAIL INDICATES CENTERLINE FOR FIRE ALARM/PULL STATION SWITCHES AND RECEPTACLES. HOWEVER THIS SAME CENTERLINE PRINCIPLE SHALL BE FOR ALL GROUP MTD. ELECTRICAL DEVICES. IF FIRE ALARM IS ON SAME SIDE OF DOOR AS SWITCHES, PULL STATION SHALL BE HORIZONTALLY SEPARATED BY A MINIMUM OF 18". THIS ELEVATION IS A GENERAL ARRANGEMENT OF OF DEVICES. ARCHITECT PLANS TAKE PRECEDENCE FOR EXACT LOCATIONS.

MOUNTING HEIGHT DETAIL
NOT TO SCALE

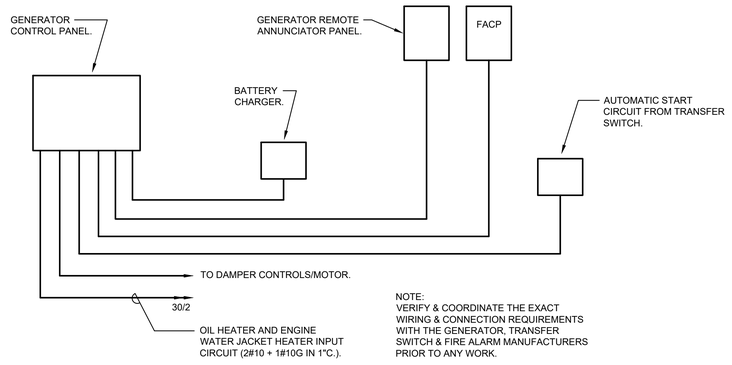

NOTE:
VERIFY & COORDINATE THE EXACT WIRING & CONNECTION REQUIREMENTS WITH THE GENERATOR, TRANSFER SWITCH & FIRE ALARM MANUFACTURERS PRIOR TO ANY WORK.

EMERGENCY GENERATOR MISCELLANEOUS CONNECTIONS DETAIL
NOT TO SCALE

ARCHITECTS
Saccoccio & Associates, Inc.
1085 Park Avenue
Cranston, Rhode Island
02910
tel 401.942.7970
fax 401.942.7975

Consultant

ENGINEERING DESIGN SERVICES INCORPORATED
149 Middle Highway Barrington, RI 02806
Tel (401) 765-7626 Fax (401) 765-2964

Education Center, Animal Building, & Pavilion

ROGER WILLIAMS PARK ZOO
100 ELMWOOD AVENUE
PROVIDENCE, RI 02907

Revision Schedule	
Revision Number	Revision Date

Issued for Bid
08/19/2024

SHEET TITLE

ELECTRICAL DETAILS

DRAWN BY:	SPC	JOB NUMBER:	18050
CHECKED BY:	RWD	DATE:	08/19/2024

E0.6

SHEET: OF:

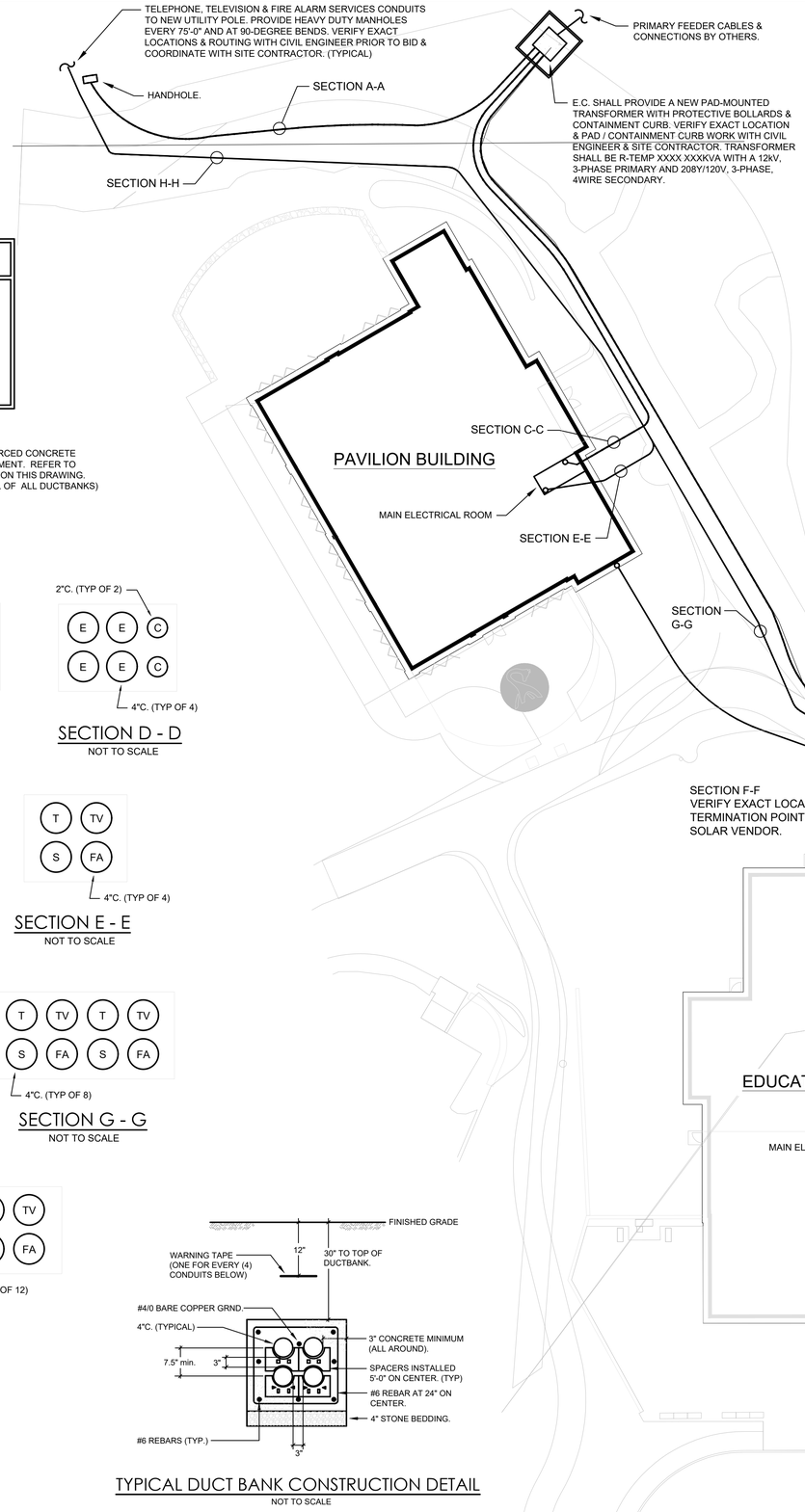

CONDUIT LEGEND

- P = POWER SERVICE (PRIMARY)
- E = POWER SERVICE (SECONDARY)
- TV = CABLE TELEVISION
- T = TELEPHONE
- FA = FIRE ALARM (IMSA)
- C = CONTROL/LOW VOLTAGE WIRES
- PV = PHOTOVOLTAIC (SOLAR)
- S = SPARE WITH PULL STRING

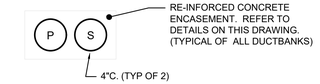

SECTION A - A
NOT TO SCALE

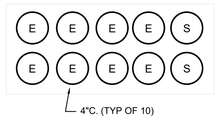

SECTION B - B
NOT TO SCALE

SECTION D - D
NOT TO SCALE

SECTION C - C
NOT TO SCALE

SECTION E - E
NOT TO SCALE

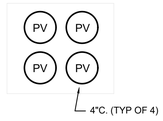

SECTION F - F
NOT TO SCALE

SECTION G - G
NOT TO SCALE

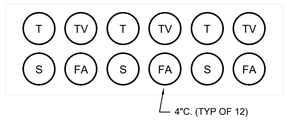

SECTION H - H
NOT TO SCALE

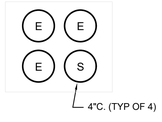

SECTION J - J
NOT TO SCALE

TYPICAL DUCT BANK CONSTRUCTION DETAIL
NOT TO SCALE

SITE PLAN NOTES:

1. E.C. SHALL COORDINATE EXACT ROUTE OF UNDERGROUND ELECTRICAL RACEWAYS IN FIELD & WITH SITE CONTRACTOR PRIOR TO INSTALLATION. RECORD ACTUAL ROUTING ON AS-BUILT DRAWINGS.
2. E.C. SHALL CONTACT DIG-SAFE PRIOR TO ANY WORK INVOLVING THE SITE ELECTRICAL WORK.
3. E.C. SHALL BE RESPONSIBLE FOR PROVIDING AND ARRANGING FOR ALL TRENCHING, OPENINGS AND CUTTING REQUIRED FOR ELECTRICAL WORK AS REQUIRED (i.e.: ROADS, CURBS, PAVEMENT, WALLS, DUCTBANKS, CONCRETE PADS, ETC.) AND FOR BACKFILLING, PATCHING, REPLACING ANY & ALL SITE ELEMENTS DISTURBED BY THIS WORK. COORDINATE WITH OWNER, ARCHITECT, G.C. AND SITE CONTRACTOR AS NECESSARY TO PROVIDE MINIMUM STANDARD OF SUCH WORKED DESCRIBED HEREIN. (TYPICAL)
4. ALL SITE LIGHTING CIRCUITS SHALL BE 2#8 + 1#8GND IN 1"C. AND BE CONTINUOUS THROUGHOUT THE ENTIRE CIRCUIT FOR A MAXIMUM CIRCUIT LENGTH OF 400'-0". IF ANY SINGLE CIRCUIT EXCEEDS 400'-0" THE CIRCUIT CONDUCTORS SHALL BE INCREASED TO #6-AWG FOR A MAXIMUM LENGTH OF 650'-0". (TYPICAL)

1 ES1-1 SITE PLAN - ELECTRICAL
1" = 20'-0"

ARCHITECTS
Saccoccio & Associates, Inc.
1085 Park Avenue
Cranston, Rhode Island
02910
tel 401.942.7970
fax 401.942.7975
Consultant
ENGINEERING DESIGN SERVICES INCORPORATED
141 Kingston Road, Suite 201 Wyoming, RI 02898
Tel (401) 783-7439 Fax (401) 783-2964

Education Center, Animal Building, & Pavilion

ROGER WILLIAMS PARK ZOO
100 ELMWOOD AVENUE
PROVIDENCE, RI 02907

Revision Schedule	
Revision Number	Revision Date

Issued for Bid
08/19/2024

SHEET TITLE

ELECTRICAL SITE PLAN

DRAWN BY:	SPC	JOB NUMBER:	18050
CHECKED BY:	RWD	DATE:	08/19/2024

ES1.1

SHEET: OF:

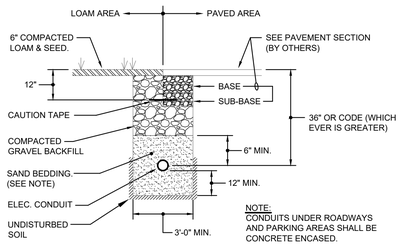

SITE LIGHTING CONDUIT TRENCH DETAIL

NOT TO SCALE

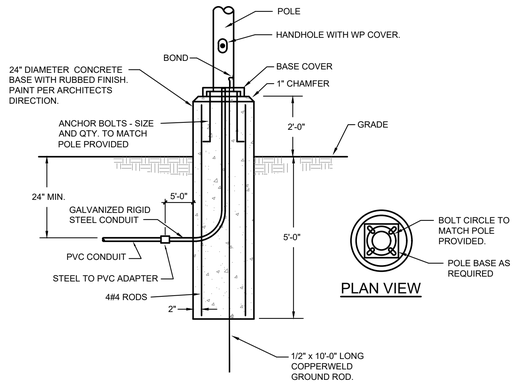

TYPICAL POLE BASE DETAIL (PARKING AREAS)

NOT TO SCALE

TYPICAL POLE BASE NOTES:

1. PROVIDE POLES AS SPECIFIED IN SCHEDULE ON DRAWINGS. PROVIDE POLE WITH HANDHOLE AND REMOVABLE WEATHERPROOF COVER.

2. PROVIDE ANCHOR BOLTS: AS RECOMMENDED BY POLE MANUFACTURER. PROVIDE TEMPLATE, FLAT WASHERS, LOCK WASHERS, AND HEX NUTS FOR EACH POLE.

3. PROVIDE FOUNDATIONS FOR POLES, BOLLARDS, AND GROUND-MOUNTED FLOOD AND ACCENT LIGHTING. CONSTRUCTED FROM REINFORCED CONCRETE IN SIZES AS SHOWN ON DRAWINGS AND TO MEET THE MINIMUM STRUCTURAL REQUIREMENTS OF IBC 1807.3 EMBEDDED POSTS AND POLES. PLACE THE ANCHOR BOLTS IN POLE BASES SO THAT THE LUMINAIRE WILL BE ORIENTED PERPENDICULAR TO THE CURB/STREET/SIDEWALK/PARKING LOT OR AS INDICATED ON THE PLANS. ALSO, REFER TO MANUFACTURERS PHOTOMETRICS PLAN FOR CORRECT ORIENTATION OF LUMINAIRE PRIOR TO ANY WORK.

4. PROVIDE A CONCRETE-ENCASED ELECTRODE (UFER) GROUNDING SYSTEM FOR GROUNDING THE FOUNDATION, LUMINAIRE, AND POLE:
   a. PROVIDE TWENTY-FIVE (25) FEET OF #6 BARE STRANDED COPPER GROUNDING ELECTRODE CONDUCTOR.
   b. EXTEND THREE (3) FEET OF THE GROUNDING ELECTRODE CONDUCTOR OUT THE TOP OF THE FOUNDATION FOR CONNECTION TO THE LUMINAIRE/POLE.
   c. CLAMP THE GROUNDING ELECTRODE CONDUCTOR TO THE TOP OF THE REBAR CAGE. USE A CLAMP RATED FOR SUCH USE SUCH AS AN ERICO EK16 OR SIMILAR.
   d. SPIRAL A MINIMUM OF TEN (10) FEET OF THE GROUNDING ELECTRODE CONDUCTOR AROUND THE OUTSIDE OF THE REBAR CAGE.
   e. LOOP THE REMAINING CONDUCTOR AROUND THE REBAR CAGE AT THE BOTTOM OF THE FOUNDATION IN DIRECT CONTACT WITH EARTH.

5. THE EXPOSED SURFACE AREA OF THE FOUNDATION SHALL HAVE THE FORMS REMOVED AND THE CONCRETE RUBBED OUT TO A SMOOTH FINISH. PAINT ALL EXPOSED SURFACE AREA PER THE ARCHITECT'S AND OWNER'S DIRECTION.

6. INSTALL IN ACCORDANCE WITH MANUFACTURERS' INSTRUCTIONS.

7. UNDERGROUND AND EXTERIOR WIRE SHALL BE TYPE XHHW-2.

8. INSTALL ALL ANCHOR BOLTS AND HANDHOLE FASTENERS WITH ANTI-SEIZE COMPOUND.

9. BOND EACH LUMINAIRE, EACH METAL ACCESSORY, THE GROUND ROD AND THE POLE TO THE BRANCH CIRCUIT EQUIPMENT GROUND CONDUCTOR WITH A SEPARATE GROUND WIRE SIZED PER NEC OR AS SHOWN ON THE DRAWINGS.

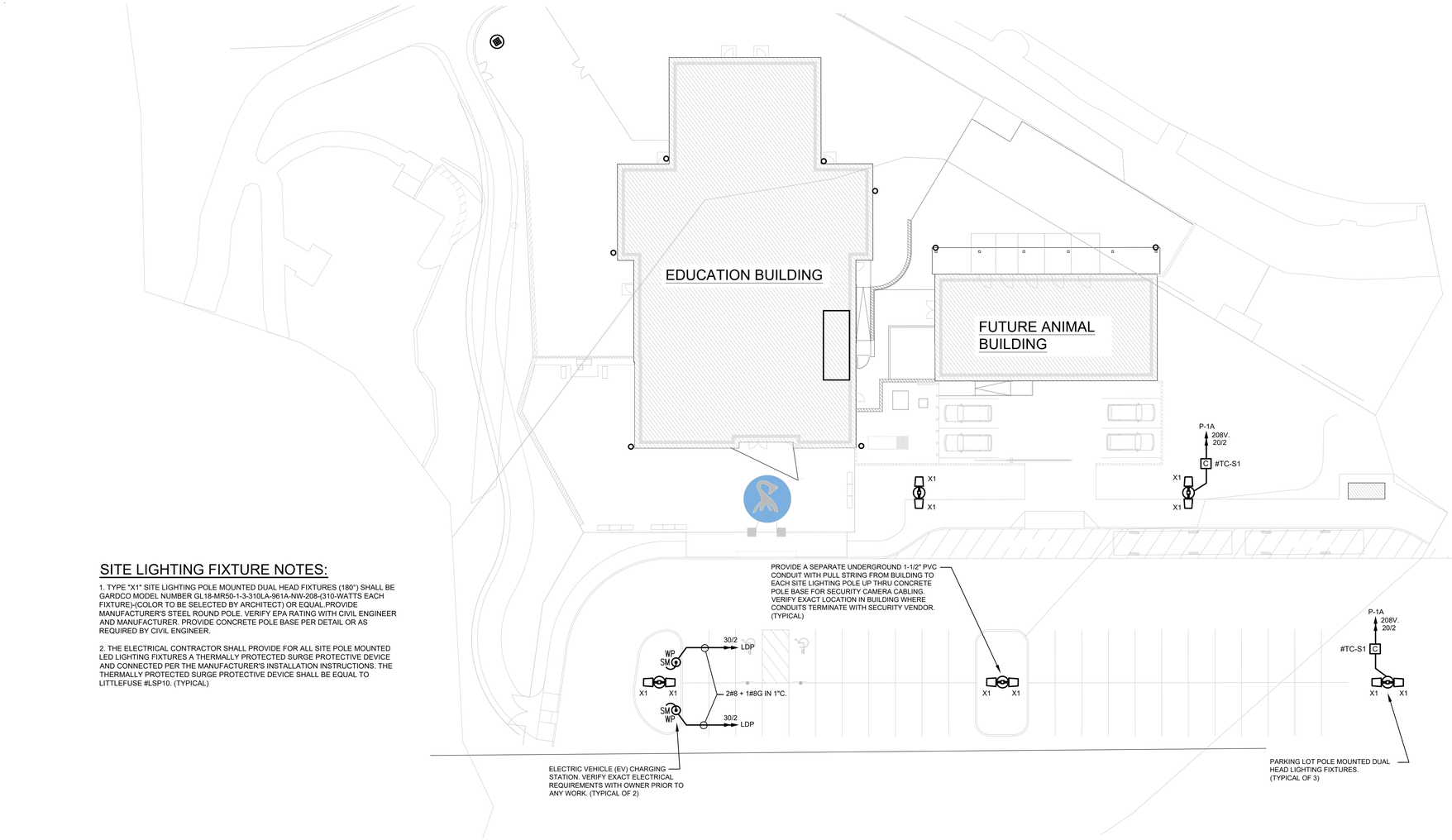

1 ES1-1 SITE PLAN - ELECTRICAL

1" = 20'-0"

SITE LIGHTING FIXTURE NOTES:

1. TYPE "X1" SITE LIGHTING POLE MOUNTED DUAL HEAD FIXTURES (180°) SHALL BE GARDCO MODEL NUMBER GL18-MR50-1-3-310LA-961A-NW-208-(310-WATTS EACH FIXTURE)-(COLOR TO BE SELECTED BY ARCHITECT) OR EQUAL.PROVIDE MANUFACTURER'S STEEL ROUND POLE. VERIFY EPA RATING WITH CIVIL ENGINEER AND MANUFACTURER. PROVIDE CONCRETE POLE BASE PER DETAIL OR AS REQUIRED BY CIVIL ENGINEER.

2. THE ELECTRICAL CONTRACTOR SHALL PROVIDE FOR ALL SITE POLE MOUNTED LED LIGHTING FIXTURES A THERMALLY PROTECTED SURGE PROTECTIVE DEVICE AND CONNECTED PER THE MANUFACTURER'S INSTALLATION INSTRUCTIONS. THE THERMALLY PROTECTED SURGE PROTECTIVE DEVICE SHALL BE EQUAL TO LITTLEFUSE #LSP10. (TYPICAL)

ARCHITECTS

Saccoccio & Associates, Inc.

1085 Park Avenue
Cranston, Rhode Island
02910

tel 401.942.7970
fax 401.942.7975

Consultant

ENGINEERING DESIGN SERVICES INCORPORATED
149 Main Street Suite 1 East Greenwich, RI 02818
Tel (401) 765-7699 Fax (401) 765-2984

Education Center, Animal Building, & Pavilion

ROGER WILLIAMS PARK ZOO

100 ELMWOOD AVENUE
PROVIDENCE, RI 02907

Revision Schedule	
Revision Number	Revision Date

Issued for Bid
08/19/2024

SHEET TITLE

ELECTRICAL SITE PLAN - LIGHTING

DRAWN BY:	SPC	JOB NUMBER:	18050
CHECKED BY:	RWD	DATE:	08/19/2024

ES1.2

SHEET: OF:

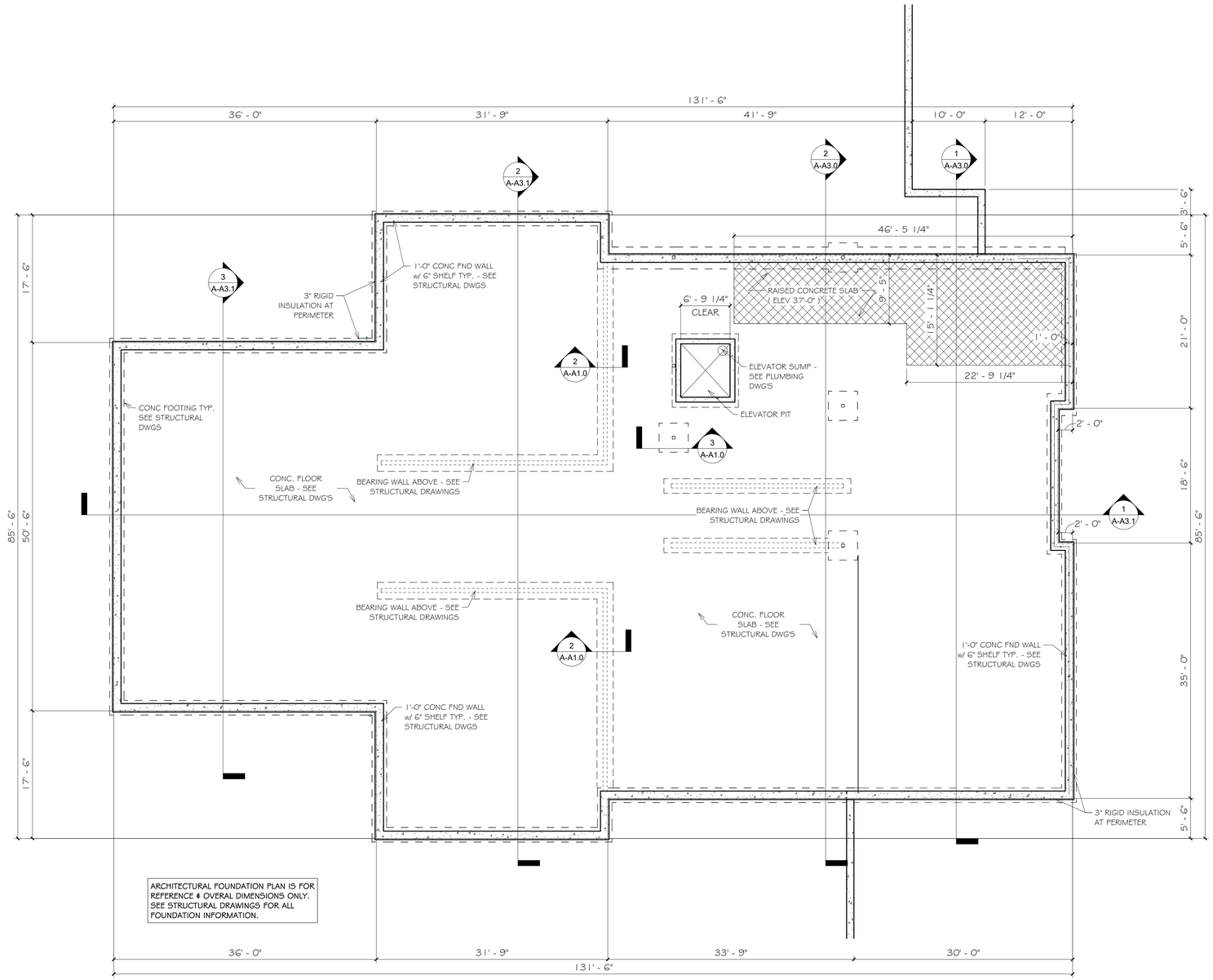

1 A-A1.0 FOUNDATION PLAN

1/8" = 1'-0"

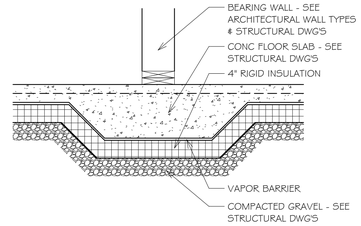

2 A-A1.0 THICKEND SLAB DETAIL

3/4" = 1'-0"

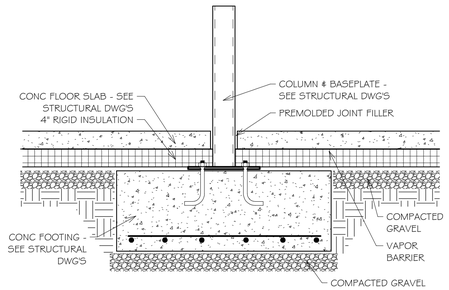

3 A-A1.0 COLUMN FOOTING DETAIL

3/4" = 1'-0"

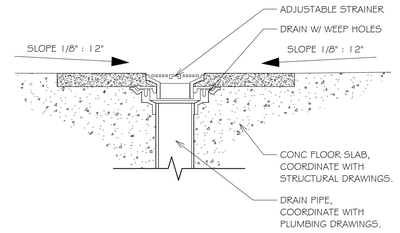

4 A-A1.0 TYPICAL FLOOR DRAIN DETAIL

3" = 1'-0"

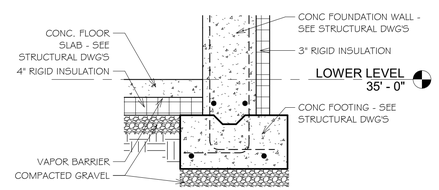

5 A-A1.0 TYPICAL FOOTING DETAIL

3/4" = 1'-0"

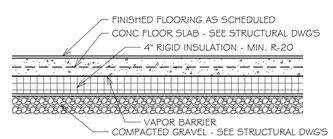

6 A-A1.0 UNDERSLAB INSULATION DETAIL

3/4" = 1'-0"

ARCHITECTS

Saccoccio & Associates, Inc.

1085 Park Avenue
Cranston, Rhode Island
02910

tel 401.942.7970
fax 401.942.7975

Consultant

ROGER WILLIAMS PARK ZOO EDUCATION CENTER

ROGER WILLIAMS PARK ZOO

1000 ELMWOOD AVENUE,
PROVIDENCE, RI 02907

Revision Schedule	
Revision Number	Revision Date

ISSUED FOR BID
AUGUST 19, 2024

SHEET TITLE

FOUNDATION PLAN

DRAWN BY:	FK, KR	JOB NUMBER:	18050
CHECKED BY:	MS	DATE:	08-19-2024

A-A1.0

SHEET: OF:

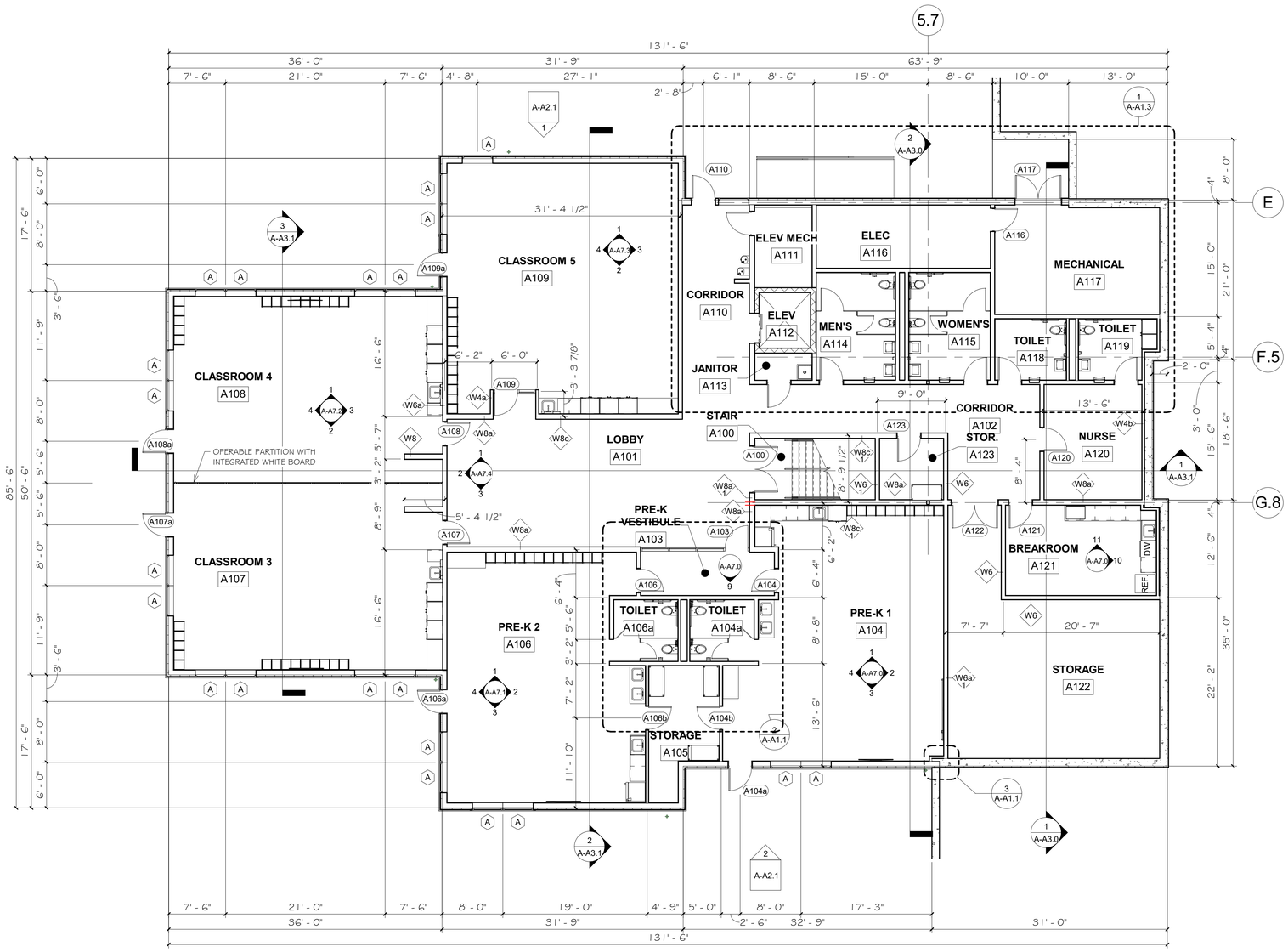

1 A-A1.1 — LOWER FLOOR PLAN

1/8" = 1'-0"

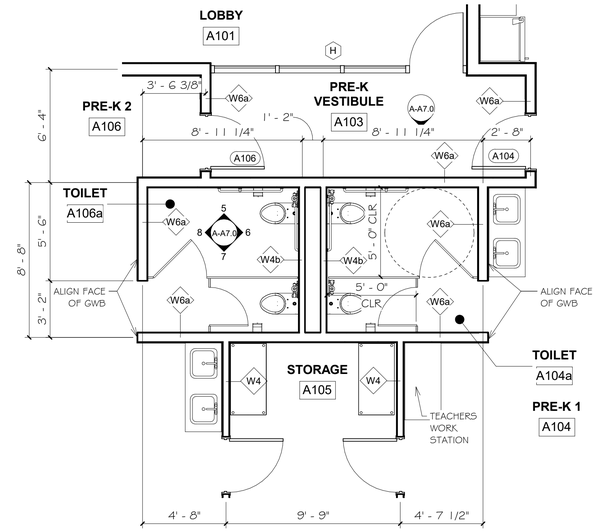

2 A-A1.1 — ENLARGED LOWER LEVEL PLAN

1/4" = 1'-0"

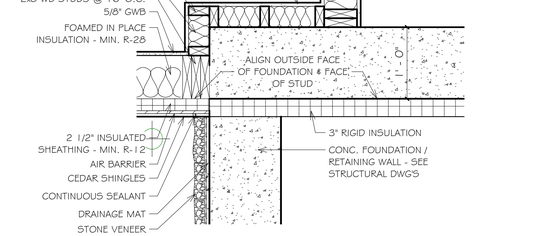

3 A-A1.1 — PLAN DETAIL

1" = 1'-0"

ARCHITECTS

Saccoccio & Associates, Inc.

1085 Park Avenue
Cranston, Rhode Island
02910

tel 401.942.7970
fax 401.942.7975

Consultant

ROGER WILLIAMS PARK ZOO EDUCATION CENTER

ROGER WILLIAMS PARK ZOO

1000 ELMWOOD AVENUE,
PROVIDENCE, RI 02907

Revision Schedule	
Revision Number	Revision Date

ISSUED FOR BID
AUGUST 19, 2024

SHEET TITLE

LOWER LEVEL FLOOR PLAN

DRAWN BY:	FK,KR	JOB NUMBER:	18050
CHECKED BY:	MS	DATE:	08-19-2024

A-A1.1

SHEET: OF:

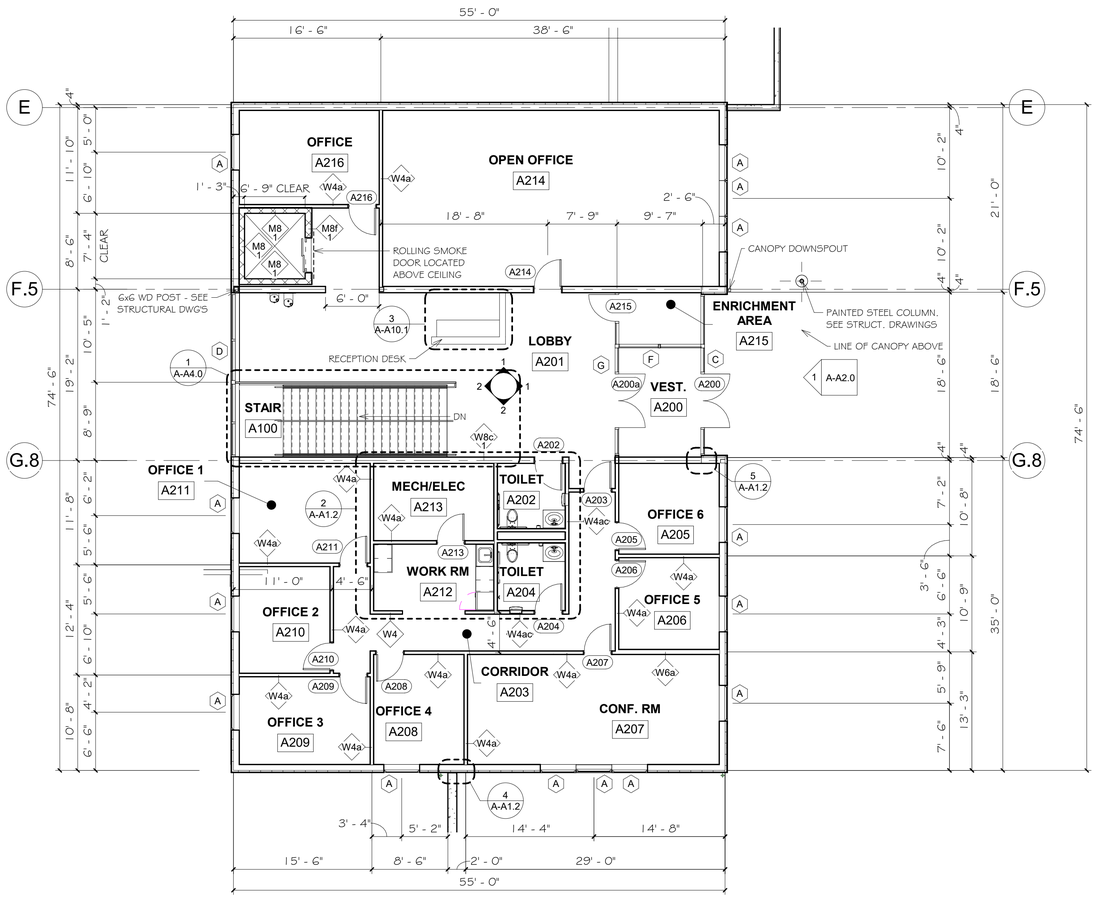

1 A-A1.2 **UPPER LEVEL FLOOR PLAN**

1/8" = 1'-0"

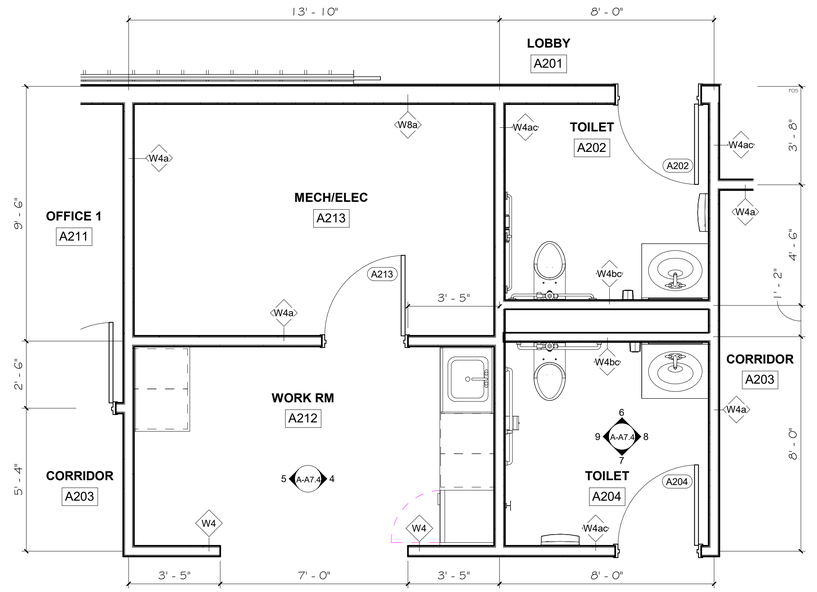

2 A-A1.2 **PLAN - TOILET A203**

3/8" = 1'-0"

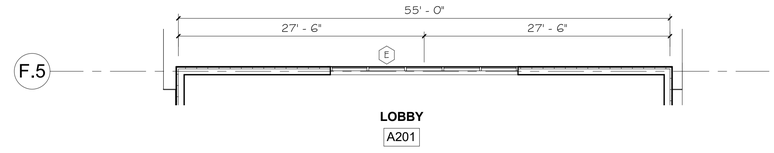

3 A-A1.2 **FLOOR PLAN - CLERESTORY WINDOWS**

1/8" = 1'-0"

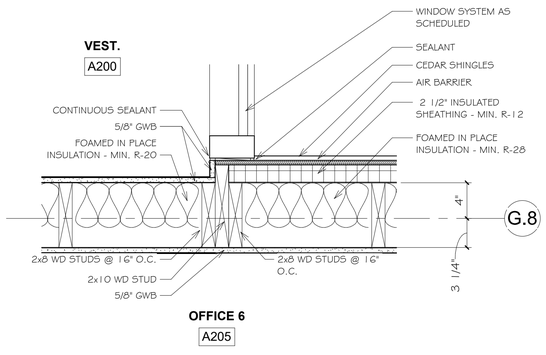

5 A-A1.2 **PLAN DETAIL**

1 1/2" = 1'-0"

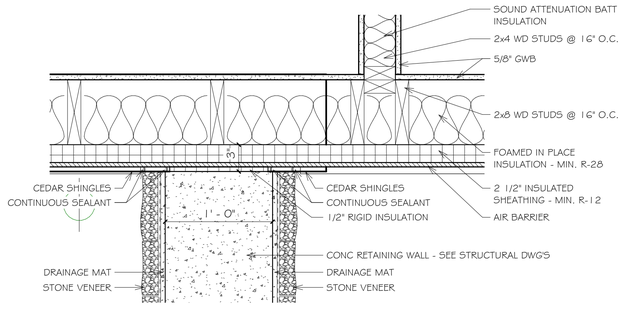

4 A-A1.2 **PLAN DETAIL**

1 1/2" = 1'-0"

ARCHITECTS

Saccoccio & Associates, Inc.

1085 Park Avenue
Cranston, Rhode Island
02910

tel 401.942.7970
fax 401.942.7975

Consultant

ROGER WILLIAMS PARK ZOO EDUCATION CENTER

ROGER WILLIAMS PARK ZOO

1000 ELMWOOD AVENUE,
PROVIDENCE, RI 02907

Revision Schedule	
Revision Number	Revision Date

ISSUED FOR BID
AUGUST 19, 2024

SHEET TITLE

UPPER LEVEL FLOOR PLAN

DRAWN BY:	FK, KR	JOB NUMBER:	18050
CHECKED BY:	MS	DATE:	08-19-2024

A-A1.2

SHEET: OF:

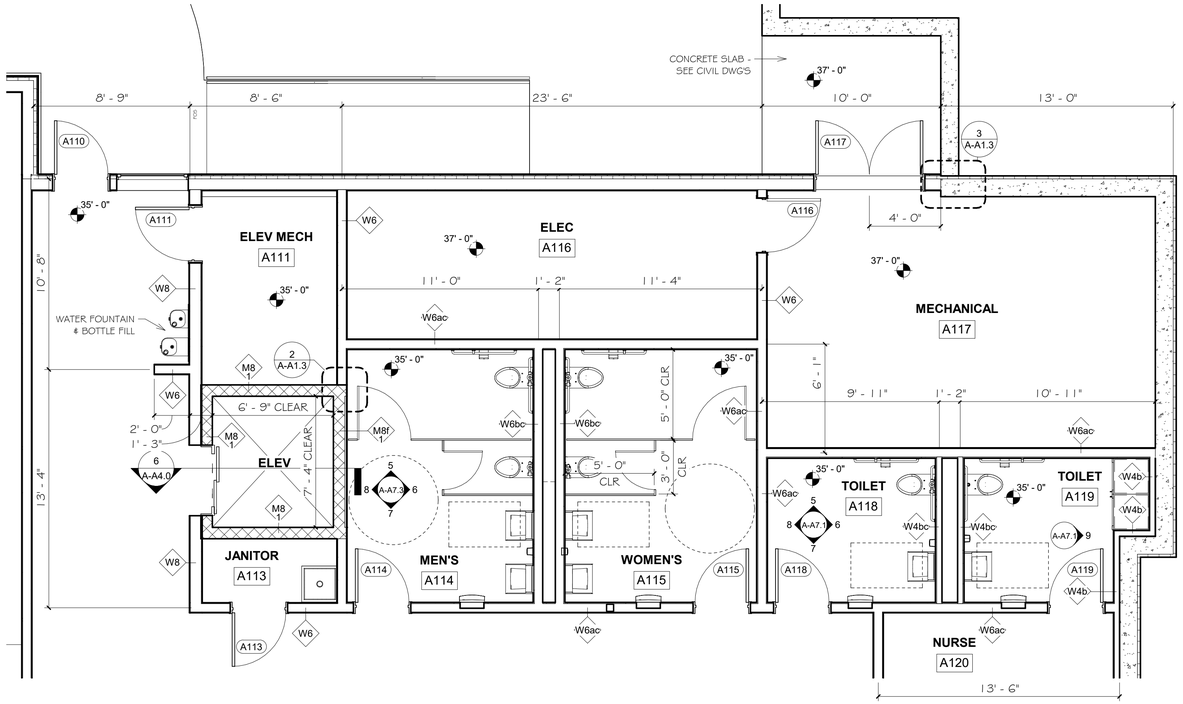

1 / A-A1.3 ENLARGED LOWER LEVEL PLAN

1/4" = 1'-0"

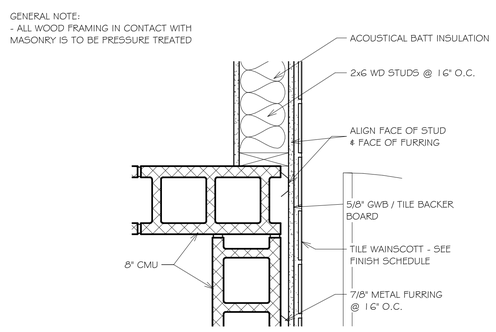

2 / A-A1.3 PLAN DETAIL

1 1/2" = 1'-0"

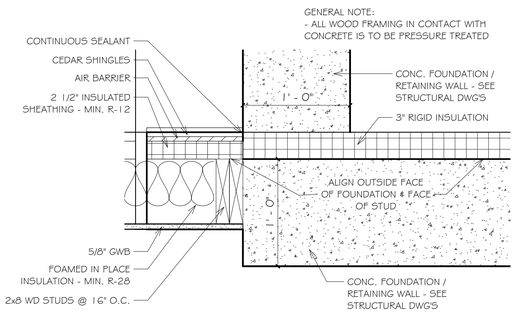

3 / A-A1.3 PLAN DETAIL

1 1/2" = 1'-0"

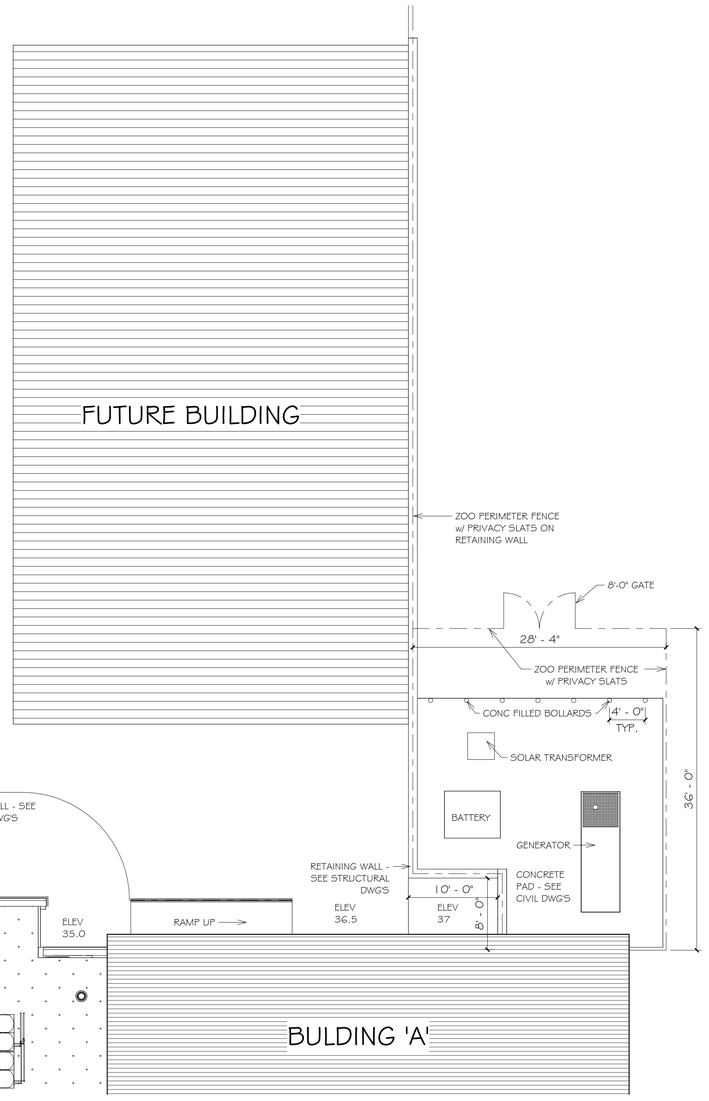

4 / A-A1.3 SERVICE YARD PLAN

1/8" = 1'-0"

ARCHITECTS

Saccoccio & Associates, Inc.

1085 Park Avenue
Cranston, Rhode Island
02910

tel 401.942.7970
fax 401.942.7975

Consultant

ROGER WILLIAMS PARK ZOO EDUCATION CENTER

ROGER WILLIAMS PARK ZOO

1000 ELMWOOD AVENUE,
PROVIDENCE, RI 02907

Revision Schedule	
Revision Number	Revision Date

ISSUED FOR BID
AUGUST 19, 2024

SHEET TITLE

ENLARGED PLANS & DETAILS

DRAWN BY:	KR	JOB NUMBER:	18050
CHECKED BY:	MS	DATE:	08-19-2024

A-A1.3

SHEET: OF:

LEGEND:
S = SECURITY FILM - SEE WINDOW SCHEDULE AND SPECIFICATIONS

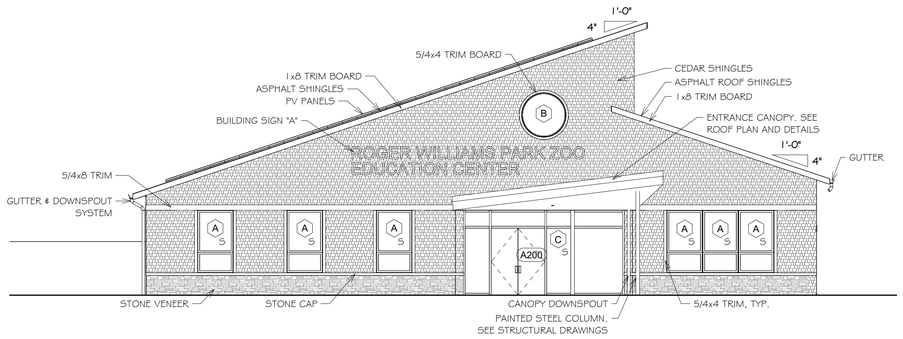

1 A-A2.0 EAST ELEVATION
1/8" = 1'-0"

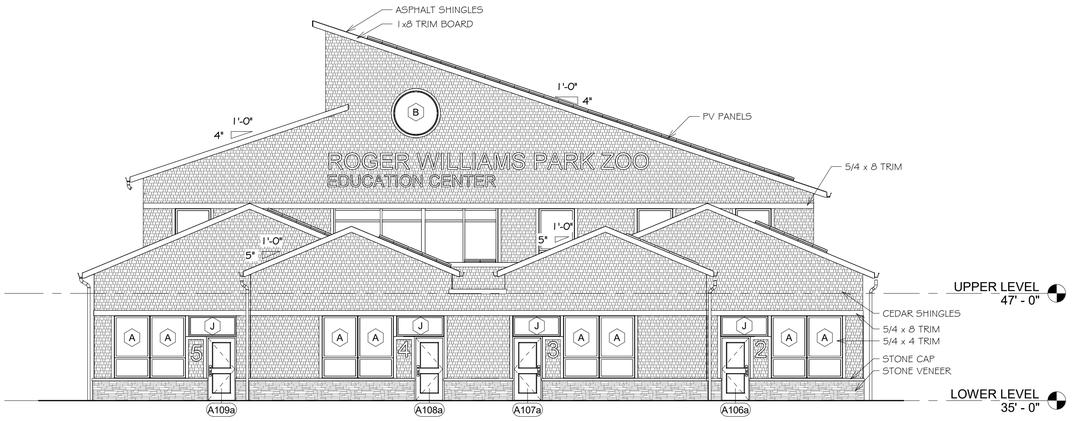

2 A-A2.0 WEST ELEVATION
1/8" = 1'-0"

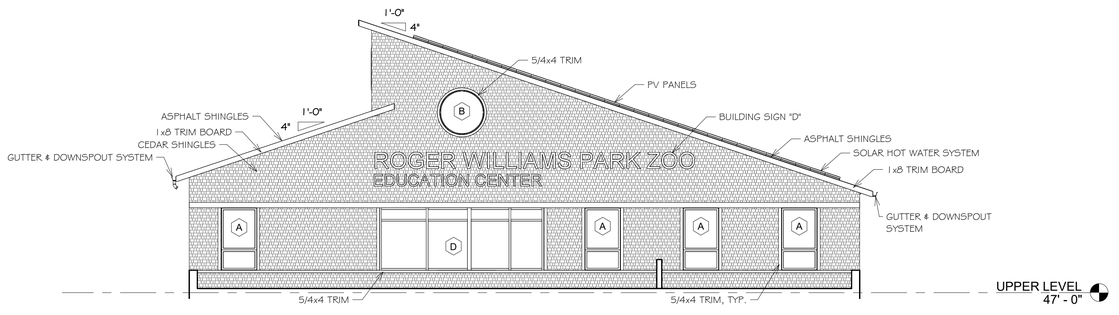

3 A-A2.0 PARTIAL WEST ELEVATION
1/8" = 1'-0"

ARCHITECTS
Saccoccio & Associates, Inc.
1085 Park Avenue
Cranston, Rhode Island
02910
tel 401.942.7970
fax 401.942.7975

Consultant

ROGER WILLIAMS PARK ZOO EDUCATION CENTER

ROGER WILLIAMS PARK ZOO
1000 ELMWOOD AVENUE,
PROVIDENCE, RI 02907

Revision Schedule	
Revision Number	Revision Date

ISSUED FOR BID
AUGUST 19, 2024

SHEET TITLE
EXTERIOR ELEVATIONS

DRAWN BY:	FK, KR	JOB NUMBER:	18050
CHECKED BY:	MS	DATE:	08-19-2024

A-A2.0

SHEET: OF:

LEGEND:
S = SECURITY FILM - SEE WINDOW SCHEDULE AND SPECIFICATIONS

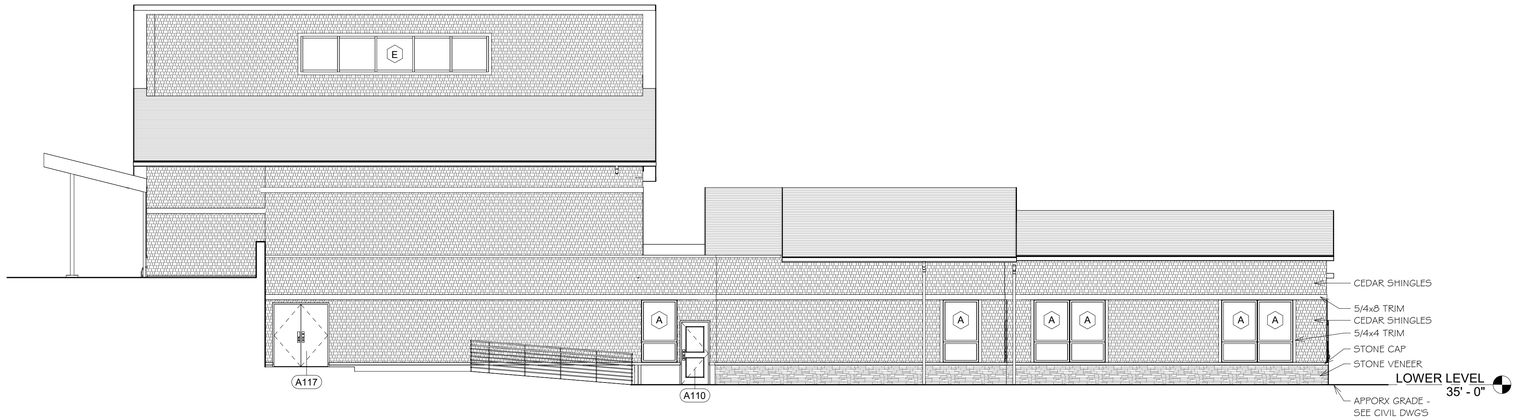

1 / A-A2.1 NEW - NORTH ELEVATION

1/8" = 1'-0"

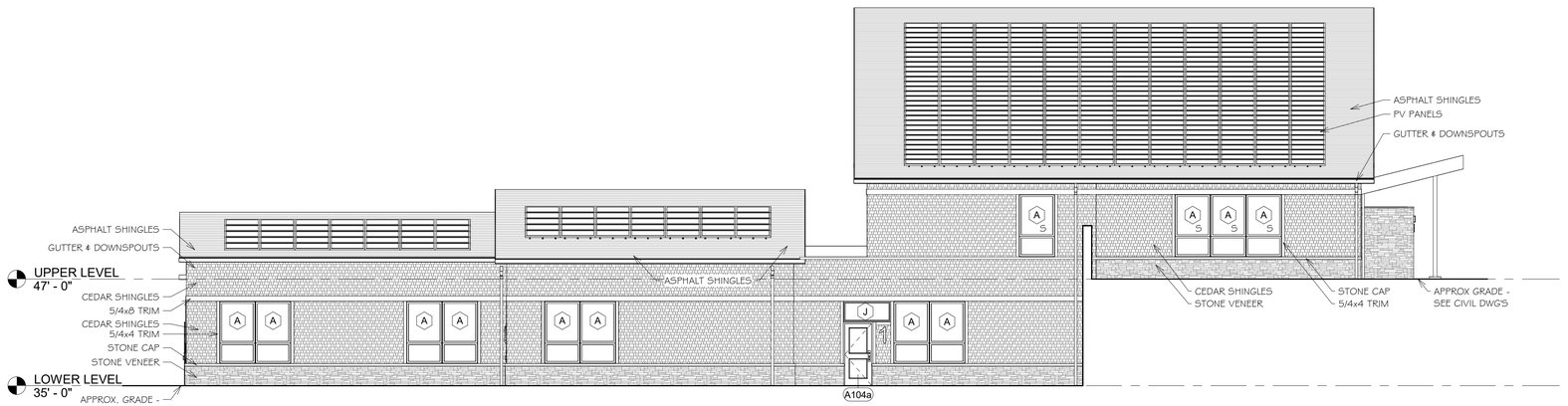

2 / A-A2.1 SOUTH ELEVATION

1/8" = 1'-0"

ARCHITECTS

Saccoccio & Associates, Inc.

1085 Park Avenue
Cranston, Rhode Island
02910

tel 401.942.7970
fax 401.942.7975

Consultant

ROGER WILLIAMS PARK ZOO EDUCATION CENTER

ROGER WILLIAMS PARK ZOO

1000 ELMWOOD AVENUE,
PROVIDENCE, RI 02907

Revision Schedule	
Revision Number	Revision Date

ISSUED FOR BID
AUGUST 19, 2024

SHEET TITLE

EXTERIOR ELEVATIONS

DRAWN BY:	FK.KR	JOB NUMBER:	18050
CHECKED BY:	MS	DATE:	08-19-2024

A-A2.1

SHEET: OF:

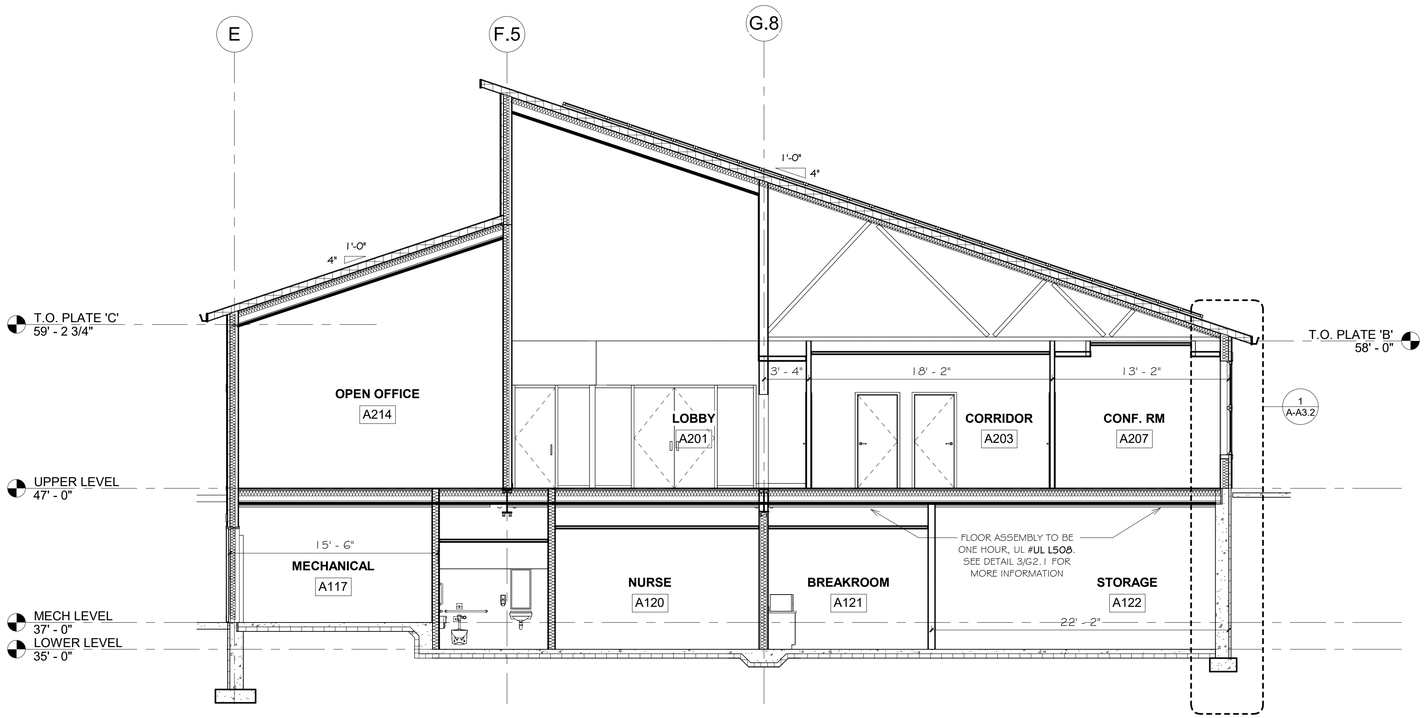

1 A-A3.0 **BUILDING SECTION**

3/16" = 1'-0"

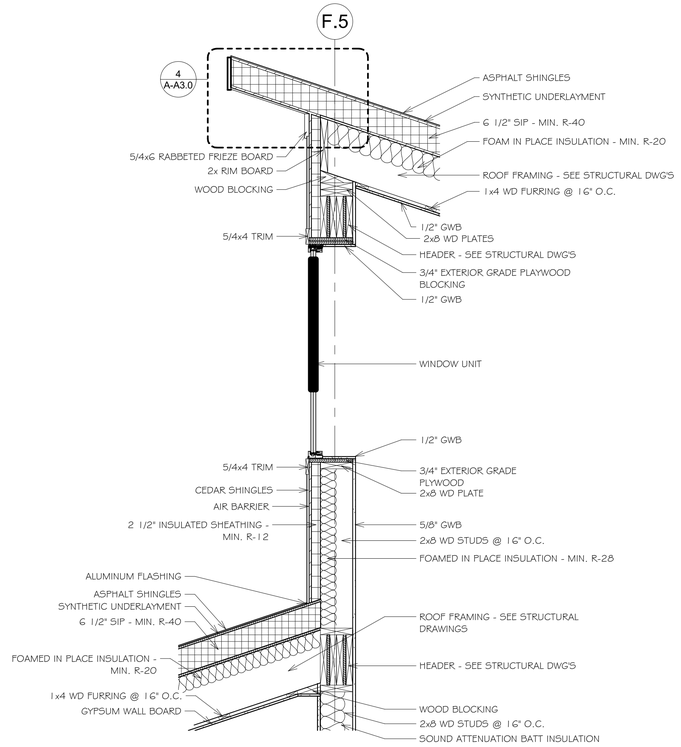

3 A-A3.0 **WALL SECTION**

3/4" = 1'-0"

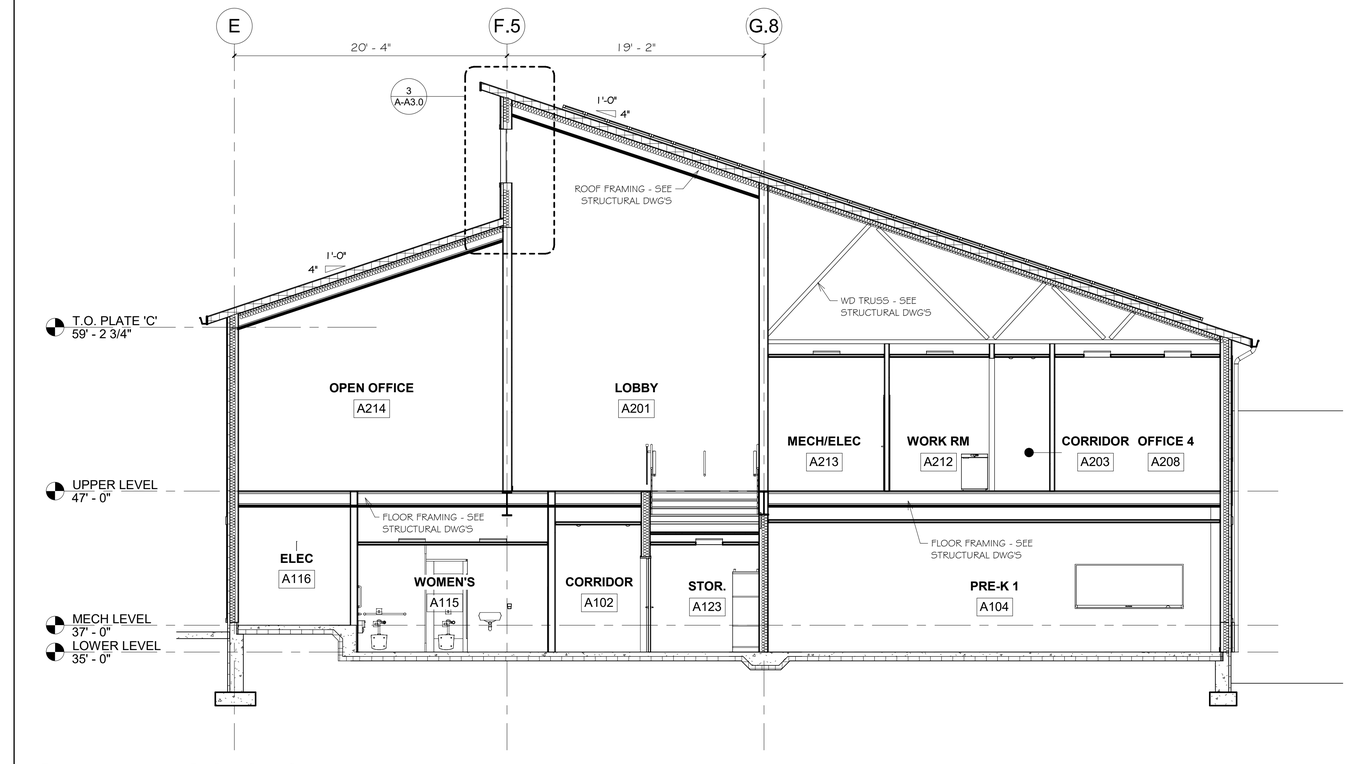

2 A-A3.0 **BUILDING SECTION**

3/16" = 1'-0"

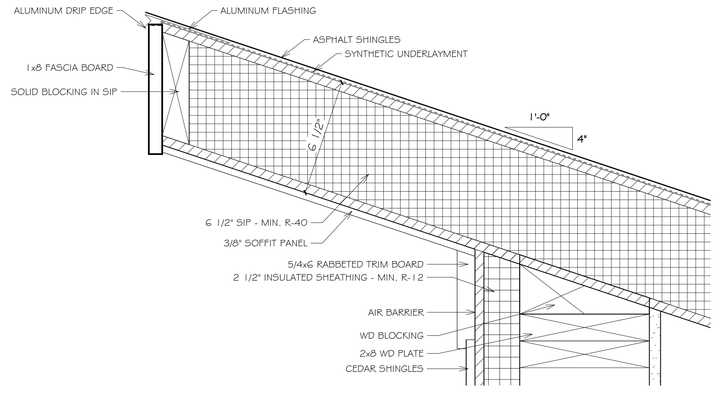

4 A-A3.0 **FASCIA DETAIL @ UPPER LEVEL ROOFS**

3" = 1'-0"

ARCHITECTS

Saccoccio & Associates, Inc.

1085 Park Avenue
Cranston, Rhode Island
02910

tel 401.942.7970
fax 401.942.7975

Consultant

ROGER WILLIAMS PARK ZOO EDUCATION CENTER

ROGER WILLIAMS PARK ZOO

1000 ELMWOOD AVENUE,
PROVIDENCE, RI 02907

Revision Schedule	
Revision Number	Revision Date

ISSUED FOR BID
AUGUST 19, 2024

SHEET TITLE

BUILDING SECTIONS

DRAWN BY:	KR	JOB NUMBER:	18050
CHECKED BY:	MS	DATE:	08-19-2024

A-A3.0

SHEET: OF:

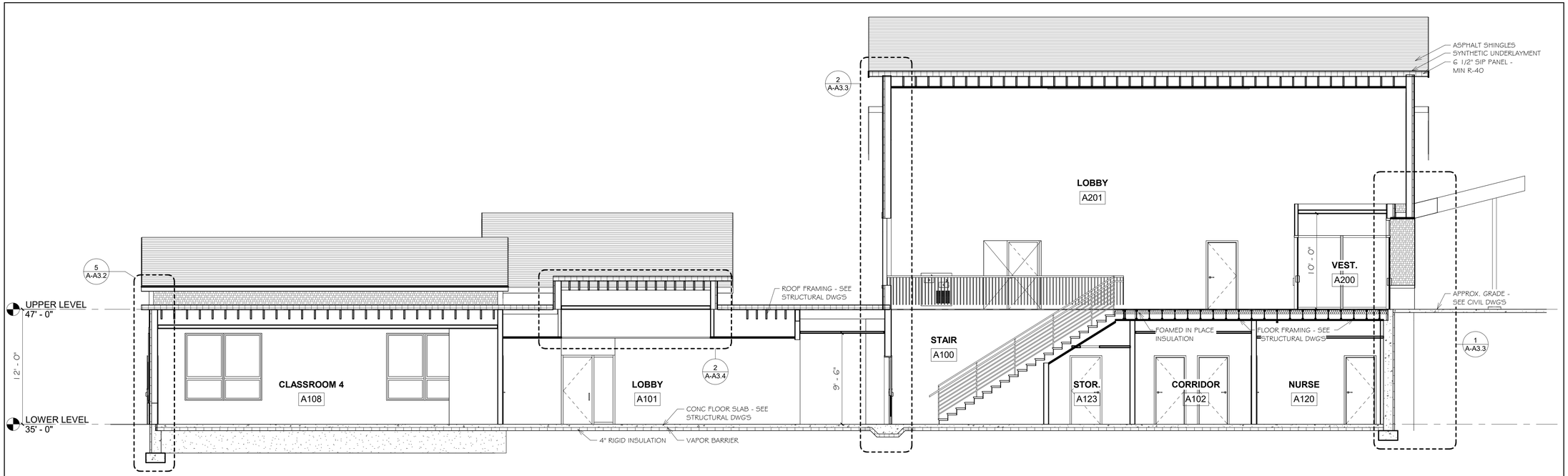

1 A-A3.1 **BUILDING SECTION**

3/16" = 1'-0"

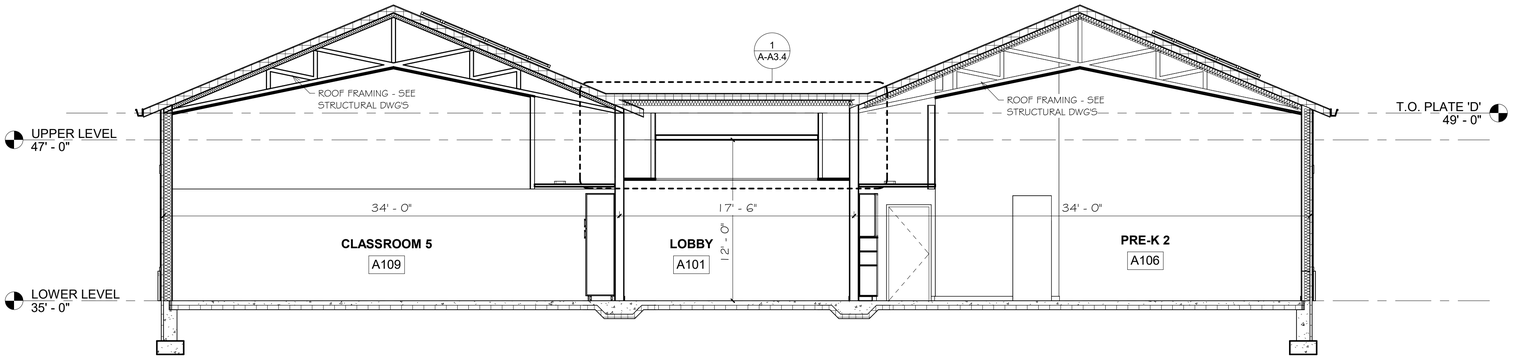

2 A-A3.1 **BUILDING SECTION**

3/16" = 1'-0"

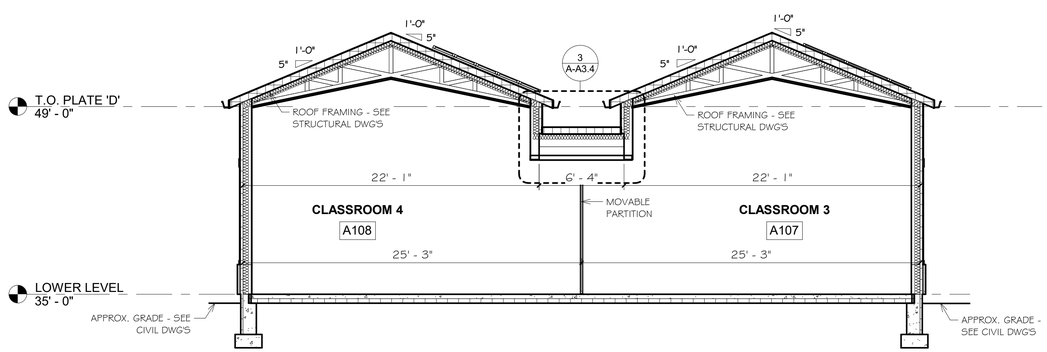

3 A-A3.1 **BUILDING SECTION**

3/16" = 1'-0"

ARCHITECTS

Saccoccio & Associates, Inc.

1085 Park Avenue
Cranston, Rhode Island
02910

tel 401.942.7970
fax 401.942.7975

Consultant

ROGER WILLIAMS PARK ZOO EDUCATION CENTER

ROGER WILLIAMS PARK ZOO

1000 ELMWOOD AVENUE,
PROVIDENCE, RI 02907

Revision Schedule	
Revision Number	Revision Date

ISSUED FOR BID
AUGUST 19, 2024

SHEET TITLE

BUILDING SECTIONS

DRAWN BY:	FK,KR	JOB NUMBER:	18050
CHECKED BY:	MS	DATE:	08-19-2024

A-A3.1

SHEET: OF:

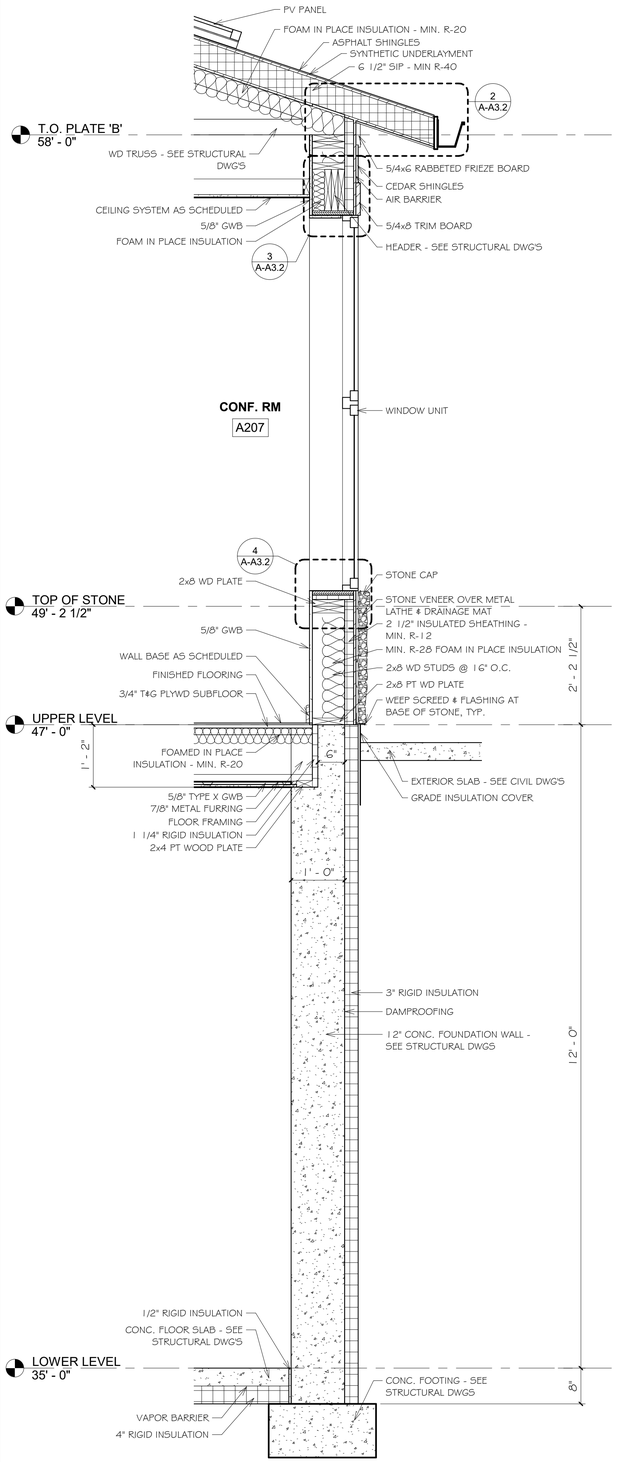

1 A-A3.2 **WALL SECTION**
3/4" = 1'-0"

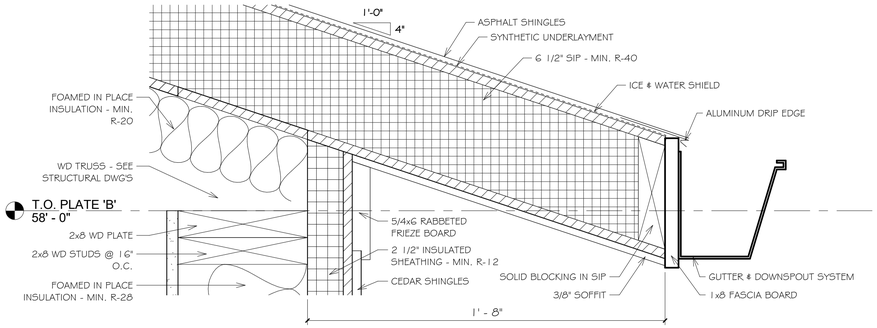

2 A-A3.2 **FASCIA DETAIL @ UPPER LEVEL ROOFS**
3" = 1'-0"

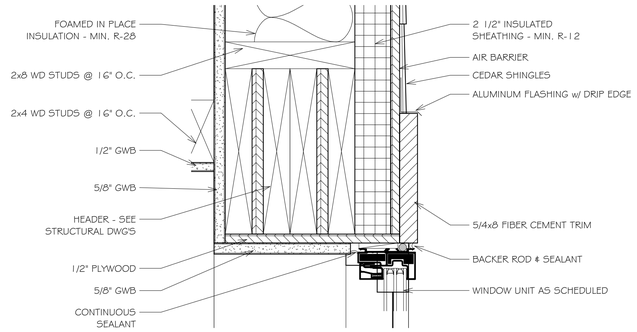

3 A-A3.2 **TYPICAL WINDOW HEAD DETAIL**
3" = 1'-0"

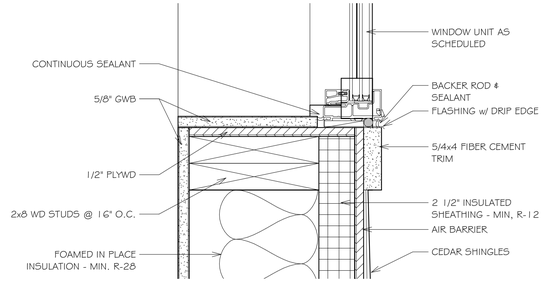

4 A-A3.2 **TYPICAL WINDOW SILL DETAIL**
3" = 1'-0"

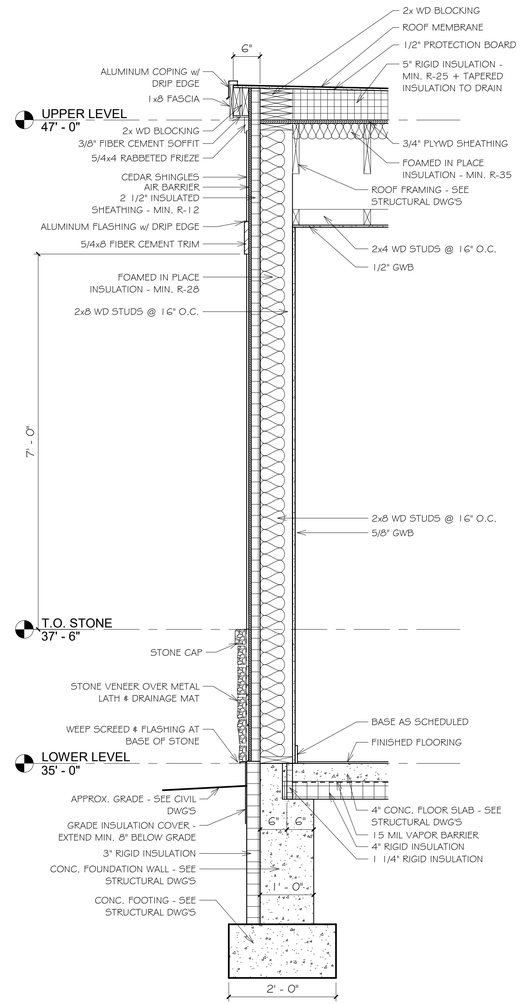

5 A-A3.2 **WALL SECTION**
3/4" = 1'-0"

ARCHITECTS
Saccoccio & Associates, Inc.
1085 Park Avenue
Cranston, Rhode Island
02910
tel 401.942.7970
fax 401.942.7975
Consultant

ROGER WILLIAMS PARK ZOO EDUCATION CENTER

ROGER WILLIAMS PARK ZOO
1000 ELMWOOD AVENUE,
PROVIDENCE, RI 02907

Revision Schedule	
Revision Number	Revision Date

ISSUED FOR BID
AUGUST 19, 2024

SHEET TITLE
WALL SECTIONS & DETAILS

DRAWN BY:	FK, KR	JOB NUMBER:	18050
CHECKED BY:	MS	DATE:	08-19-2024

A-A3.2

SHEET: OF:

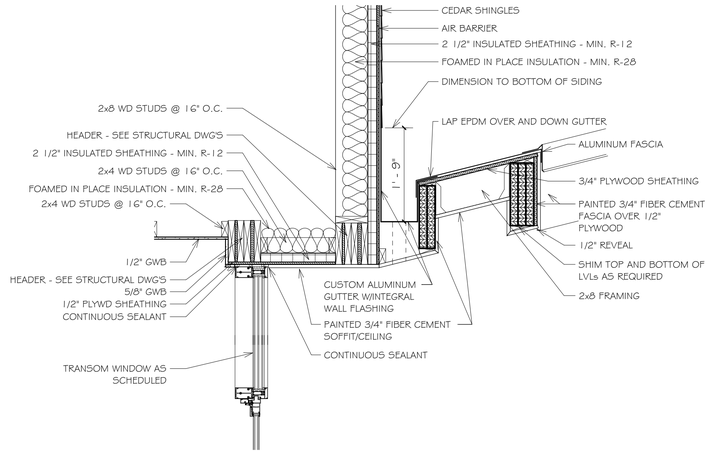

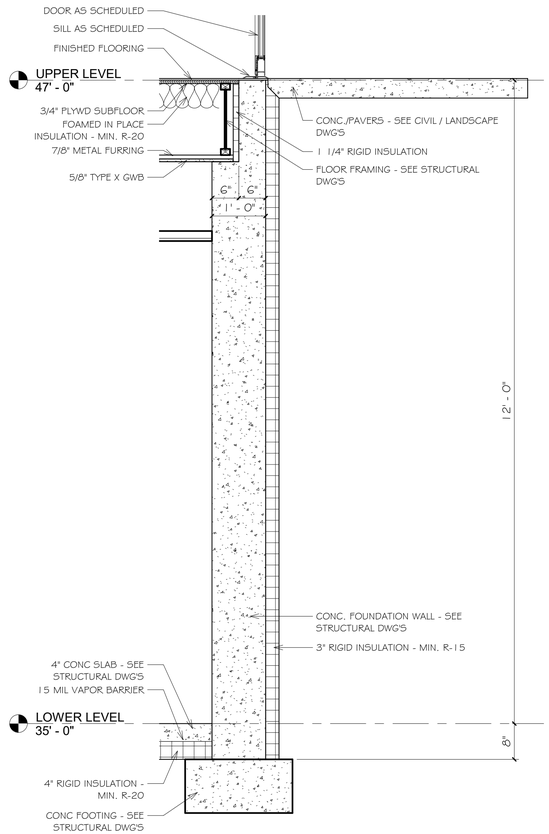

1 A-A3.3 **WALL SECTION**
3/4" = 1'-0"

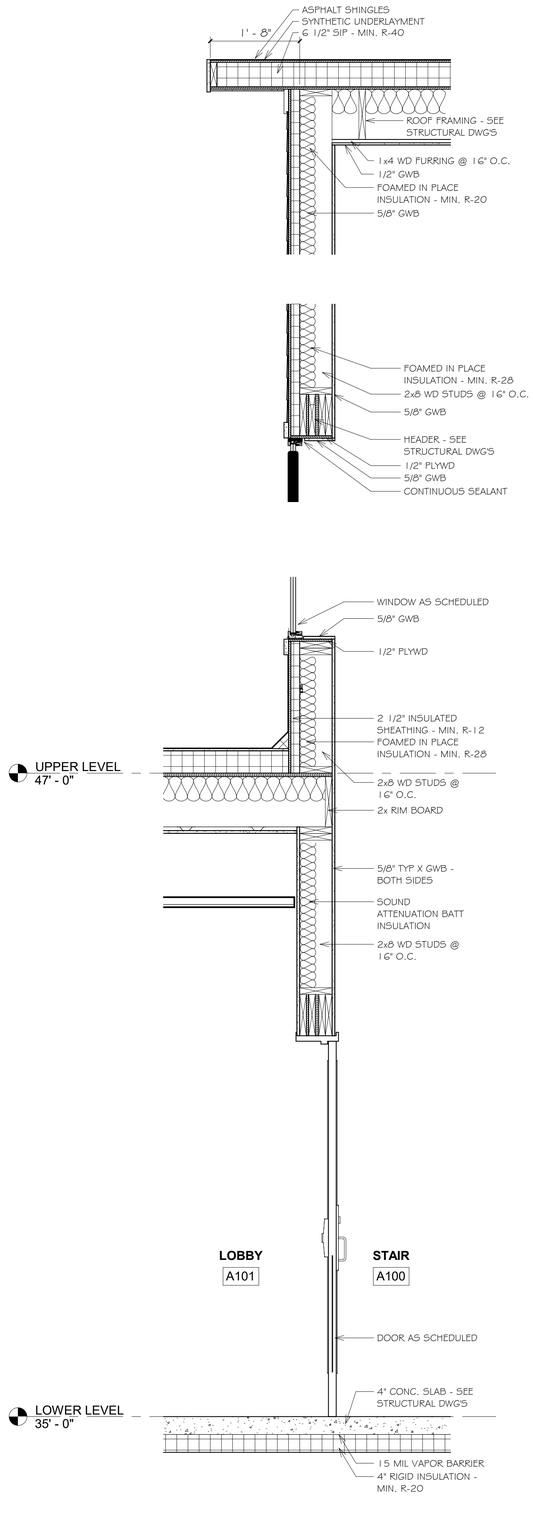

2 A-A3.3 **WALL SECTION**
3/4" = 1'-0"

ARCHITECTS

Saccoccio & Associates, Inc.
1085 Park Avenue
Cranston, Rhode Island
02910
tel 401.942.7970
fax 401.942.7975

Consultant

ROGER WILLIAMS PARK ZOO EDUCATION CENTER

ROGER WILLIAMS PARK ZOO

1000 ELMWOOD AVENUE,
PROVIDENCE, RI 02907

Revision Schedule	
Revision Number	Revision Date

ISSUED FOR BID
AUGUST 19, 2024

SHEET TITLE

WALL SECTIONS

DRAWN BY:	FK, KR	JOB NUMBER:	18050
CHECKED BY:	MS	DATE:	08-19-2024

A-A3.3

SHEET: OF:

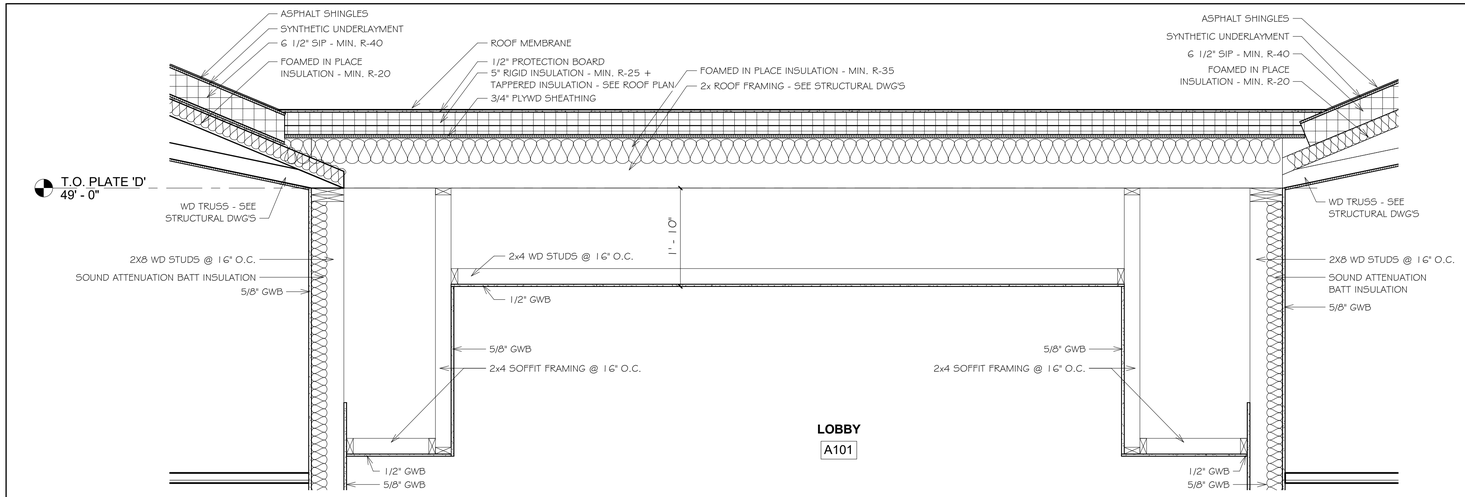

1 A-A3.4

SECTION @ LOBBY A101

3/4" = 1'-0"

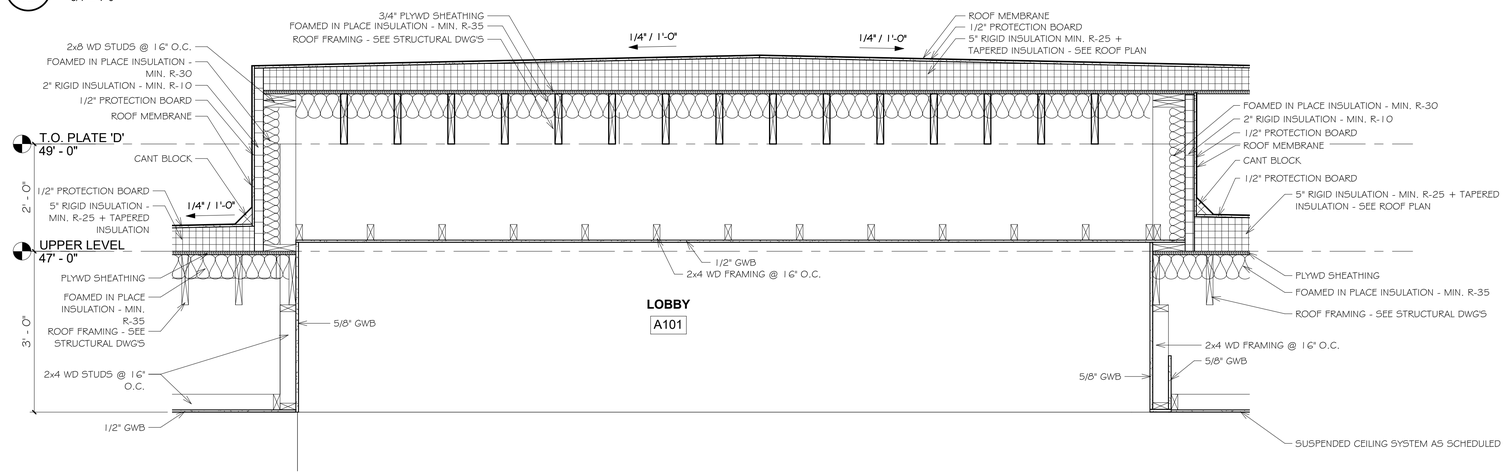

2 A-A3.4

SECTION @ LOBBY A101

3/4" = 1'-0"

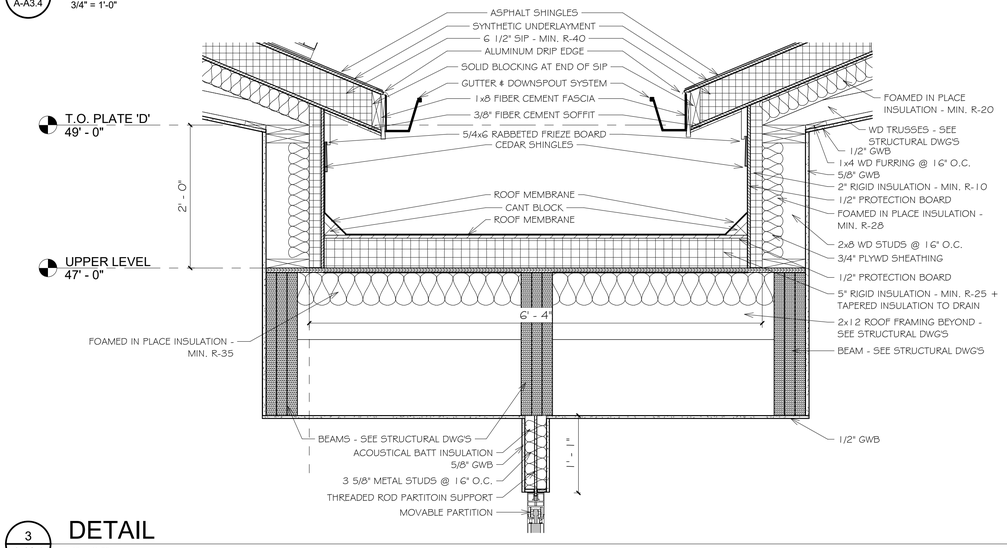

3 A-A3.4

DETAIL

1" = 1'-0"

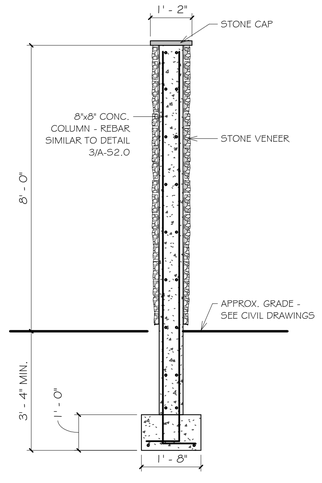

4 A-A3.4

ENTRANCE COLUMN DETAIL

1/2" = 1'-0"

ARCHITECTS

Saccoccio & Associates, Inc.

1085 Park Avenue
Cranston, Rhode Island 02910

tel 401.942.7970
fax 401.942.7975

Consultant

ROGER WILLIAMS PARK ZOO EDUCATION CENTER

ROGER WILLIAMS PARK ZOO

1000 ELMWOOD AVENUE, PROVIDENCE, RI 02907

Revision Schedule	
Revision Number	Revision Date

ISSUED FOR BID
AUGUST 19, 2024

SHEET TITLE

SECTIONS

DRAWN BY:	FK, KR	JOB NUMBER:	18050
CHECKED BY:	MS	DATE:	08-19-2024

A-A3.4

SHEET: OF:

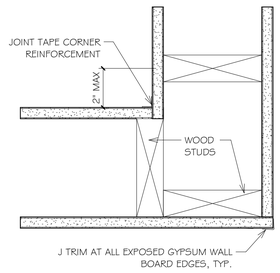

1 / A-A3.5 TYP. GWB CORNER DETAIL

3" = 1'-0"

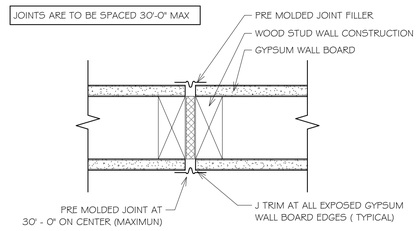

2 / A-A3.5 TYP. GWB CONTROL JOINT

3" = 1'-0"

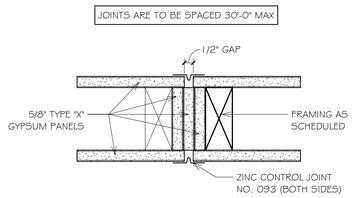

3 / A-A3.5 TYP. 1 HR RATED CONTROL JOINT

3" = 1'-0"

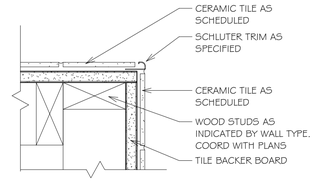

4 / A-A3.5 TYPICAL TILE CORNER DETAIL

3" = 1'-0"

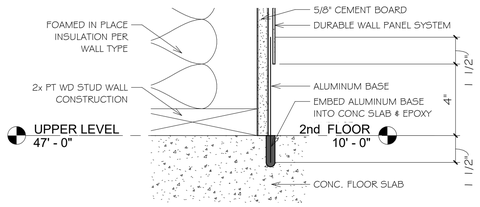

5 / A-A3.5 ALUMINUM BASE DETAIL

3" = 1'-0"

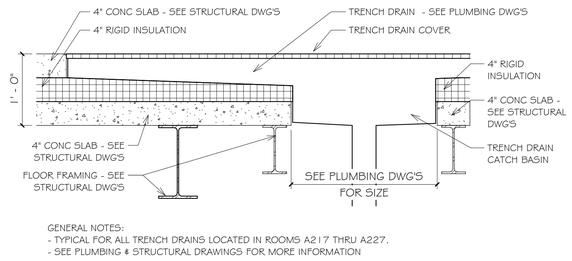

GENERAL NOTES:
- TYPICAL FOR ALL TRENCH DRAINS LOCATED IN ROOMS A217 THRU A227.
- SEE PLUMBING & STRUCTURAL DRAWINGS FOR MORE INFORMATION

6 / A-A3.5 TRENCH DRAIN DETAIL

1" = 1'-0"

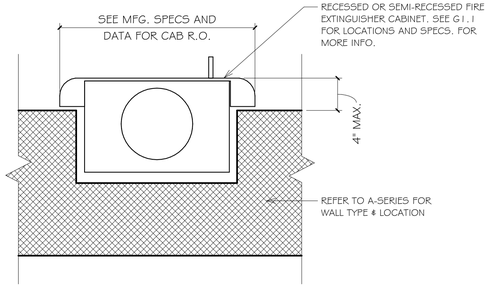

7 / A-A3.5 FIRE EXTINGUISHER DETAIL

3" = 1'-0"

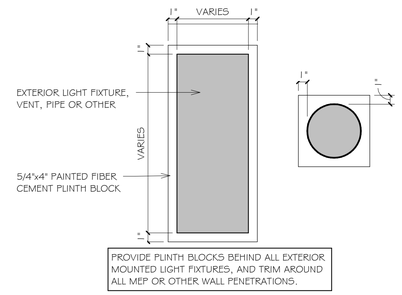

8 / A-A3.5 PLINTH BLOCK DETAIL

1 1/2" = 1'-0"

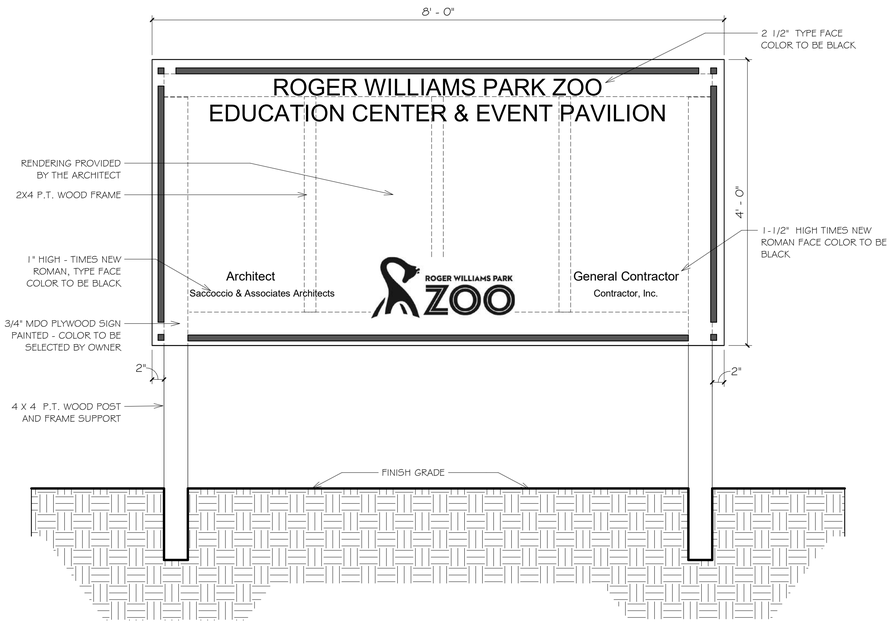

9 / A-A3.5 CONSTRUCTION SIGN

1" = 1'-0"

ARCHITECTS

Saccoccio & Associates, Inc.

1085 Park Avenue
Cranston, Rhode Island
02910

tel 401.942.7970
fax 401.942.7975

Consultant

ROGER WILLIAMS PARK ZOO EDUCATION CENTER

ROGER WILLIAMS PARK ZOO

1000 ELMWOOD AVENUE,
PROVIDENCE, RI 02907

Revision Schedule	
Revision Number	Revision Date

ISSUED FOR BID
AUGUST 19, 2024

SHEET TITLE

MISCELLANEOUS DETAILS

DRAWN BY:	KR	JOB NUMBER:	18050
CHECKED BY:	MS	DATE:	08-19-2024

A-A3.5

SHEET: OF:

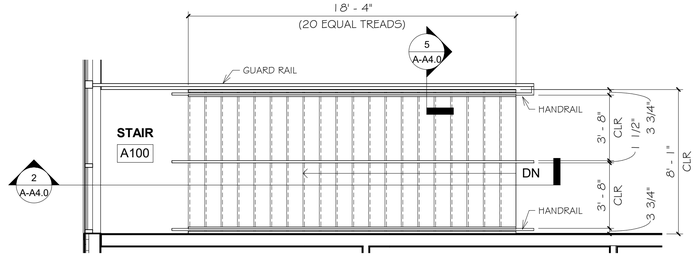

1 A-A4.0 PLAN - STAIR A100

1/4" = 1'-0"

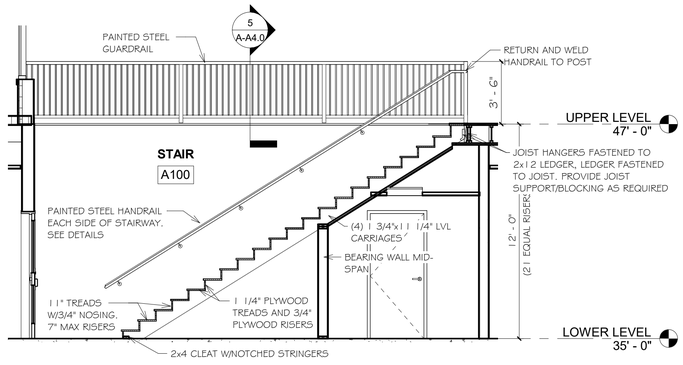

2 A-A4.0 SECTION STAIR A100

1/4" = 1'-0"

STAIR NOTES:

1. ALL EXPOSED STEEL STAIR ELEMENTS ARE TO BE PAINTED. COLOR BY ARCHITECT.
2. SEE FINISH SCHEDULE FOR MORE INFORMATION.
3. ALL HANDRAILS SHALL HAVE A 2 1/4" CLEARANCE BETWEEN THEM AND WALLS, AS WELL AS ANY OTHER OBSTRUCTIONS, AND BE 36" HIGH FROM THE OUTERMOST POINT OF THE NOSINGS TO THE TOP OF THE HANDRAIL.
4. ALL WALL MOUNTED HAND RAILS SHALL EXTEND HORIZONTALLY FOR 12" AT 36" ABOVE FINISH FLOOR AT THE TOP OF EACH STAIR RUN. AT THE BOTTOM OF EACH RUN THEY SHALL EXTEND 11" FROM THE EDGE OF LAST NOSING AT THE SLOPE OF THE STAIRS. RETURN WALL-MOUNTED HANDRAILS TO THE WALL AT ALL ENDS.
5. ALL GUARDRAILS SHALL BE 42" HIGH FROM THE OUTERMOST POINT OF THE NOSINGS TO THE TOP OF THE GUARDRAIL AT STAIR RUNS, AND 42" FROM THE FINISH FLOOR TO THE TOP OF THE GUARDRAIL AT LANDINGS.
6. PROVIDE ADEQUATE FIRE RESISTANT BLOCKING, REINFORCEMENT, SUPPORTS, ETC. AS REQUIRED FOR BRACKETS AND OTHER SUPPORTING ELEMENTS.

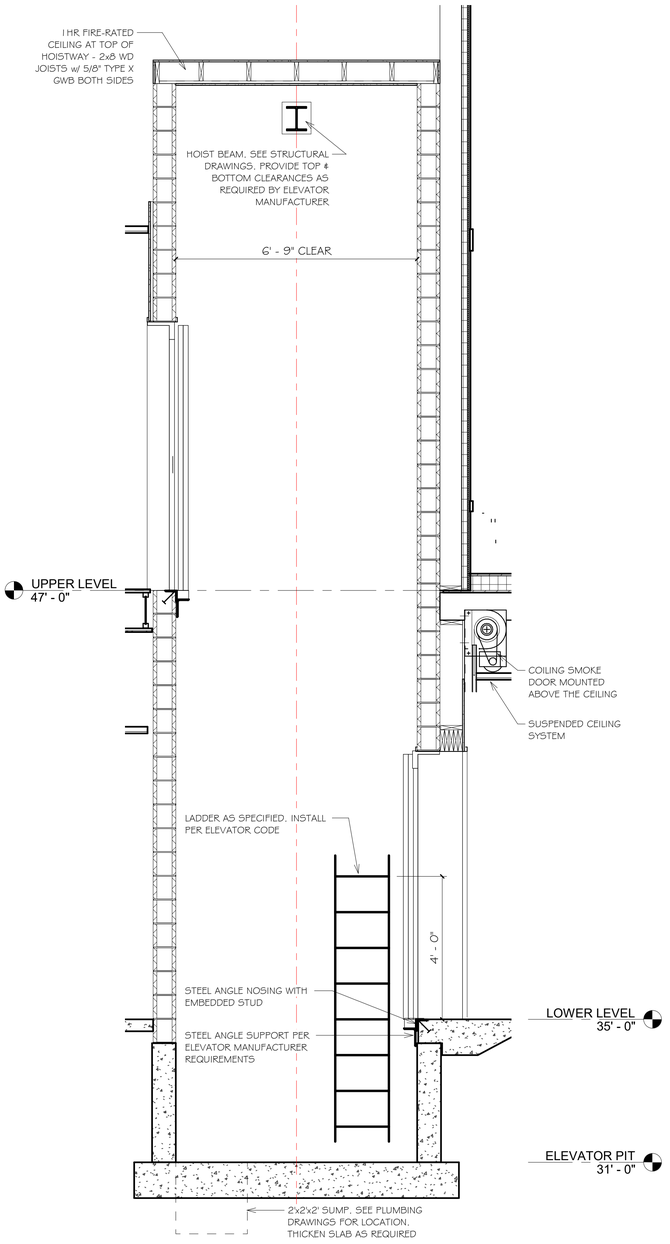

6 A-A4.0 ELEVATOR HOISTWAY

1/2" = 1'-0"

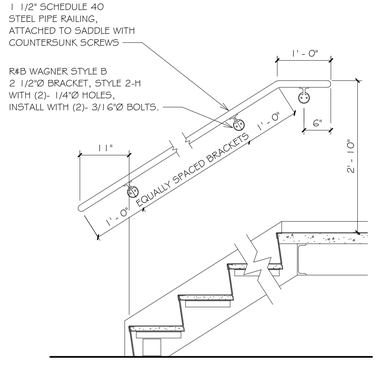

3 A-A4.0 STAIR DETAIL

3/4" = 1'-0"

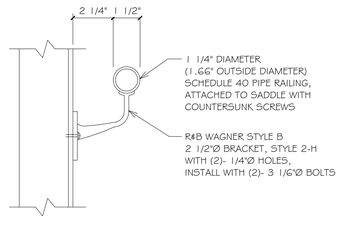

4 A-A4.0 WALL MOUNTED RAILING

3" = 1'-0"

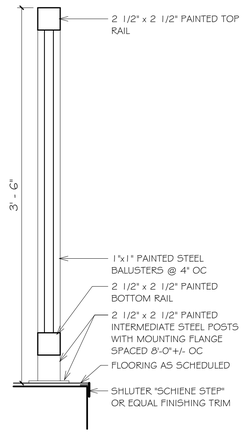

5 A-A4.0 GUARD RAIL DETAIL STAIR A100

1 1/2" = 1'-0"

ARCHITECTS

Saccoccio & Associates, Inc.

1085 Park Avenue
Cranston, Rhode Island
02910

tel 401.942.7970
fax 401.942.7975

Consultant

ROGER WILLIAMS PARK ZOO EDUCATION CENTER

ROGER WILLIAMS PARK ZOO

1000 ELMWOOD AVENUE,
PROVIDENCE, RI 02907

Revision Schedule	
Revision Number	Revision Date

ISSUED FOR BID
AUGUST 19, 2024

SHEET TITLE

STAIR AND ELEVATOR PLANS AND SECTIONS

DRAWN BY:	TI	JOB NUMBER:	18050
CHECKED BY:	MS	DATE:	08-19-2024

A-A4.0

SHEET: OF:

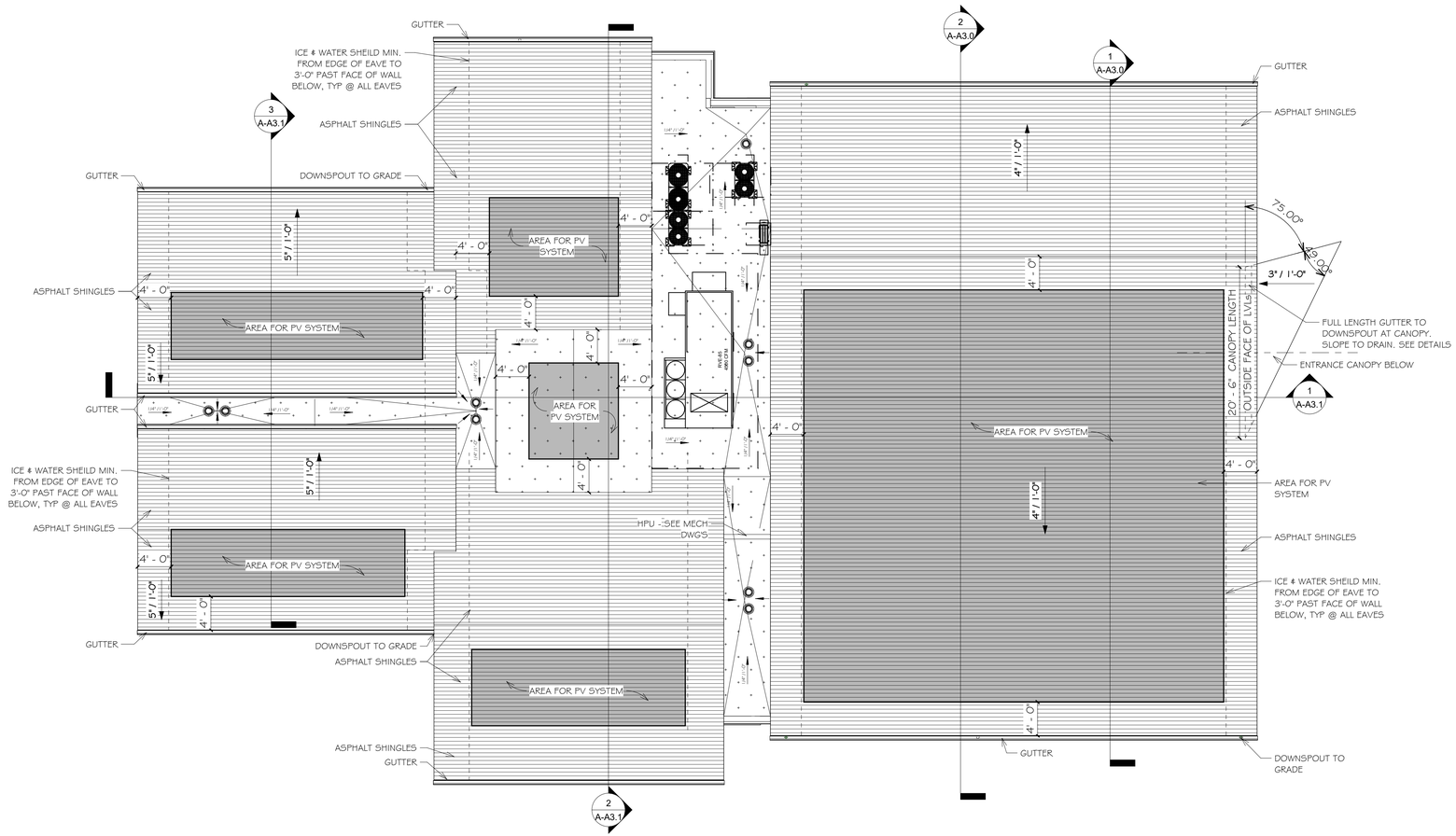

ROOF PLAN

1/8" = 1'-0"

ROOF PLAN LEGEND

- ASPHALT SHINGLE ROOF
- TPO ROOF MEMBRANE
- AREA AVAILABLE FOR PV PANELS

NOTES

- GC IS TO PROVIDE DESIGN & INSTALATION OF THE PV SYSTEM BASED ON THE REQUIREMENTS OUTLINED IN THE DRAWINGS, SPECIFICATIONS & ALL APPLICABLE CODES.
- THE PV SYSTEM SHOULD BE DESIGNED AT A MINIMUM TO MEET 100% OF THE ELECTRICAL NEEDS FOR BUILDING 'A' (EDUCATION CENTER).
- AREAS FOR PV PANELS ARE DIAGRAMATIC & OUTLINE GENERAL ROOF AREA AVAILABLE. LAYOUT & PANEL SPACING ARE TO BE PROVIDED BY PV CONTRACTOR.
- PV LAYOUT IS TO MEET ALL APPLICABLE STATE & LOCAL CODE REQUIREMENTS & BE APPROVED BY AHJ PRIOR TO INSTALLATION.
- ALL TAPERED INSULATION IS TO MEET MIN. SLOPE OF 1/4" PER 1'-0". GC IS TO PROVIDE TAPERED INSULATION PLAN TO ARCHITECT PRIOR TO INSTALLATION.
- PROVIDE CRICKETS AND/OR TAPERED INSULATION AS REQUIRED AT ROOF MOUNTED EQUIPMENT TO PROVIDE POSITIVE WATER FLOW TOWARDS ROOF DRAINS.

ARCHITECTS

Saccoccio & Associates, Inc.

1085 Park Avenue
Cranston, Rhode Island
02910

tel 401.942.7970
fax 401.942.7975

Consultant

ROGER WILLIAMS PARK ZOO EDUCATION CENTER

ROGER WILLIAMS PARK ZOO

1000 ELMWOOD AVENUE,
PROVIDENCE, RI 02907

Revision Schedule	
Revision Number	Revision Date

ISSUED FOR BID
AUGUST 19, 2024

SHEET TITLE

ROOF PLAN & DETAILS

DRAWN BY:	KR	JOB NUMBER:	18050
CHECKED BY:	MS	DATE:	08-19-2024

A-A5.0

SHEET: OF:

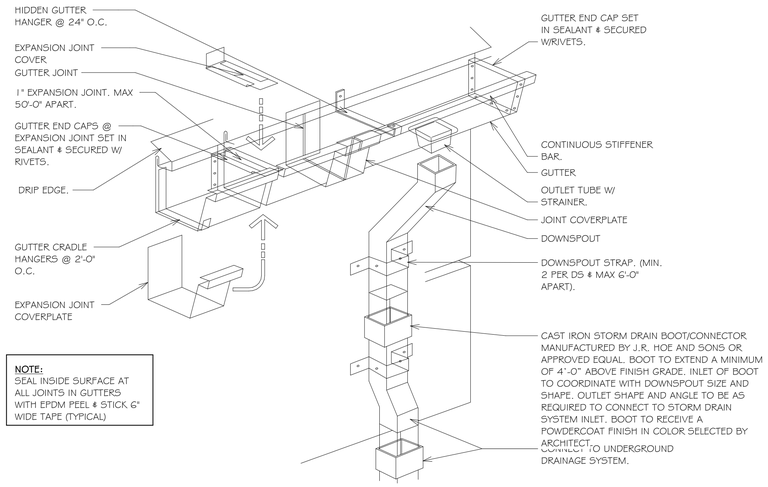

1 A-A5.1 GUTTER/ EXP. JOINT & DOWNSPOUT TO CAST IRON BOOT
1 1/2" = 1'-0"

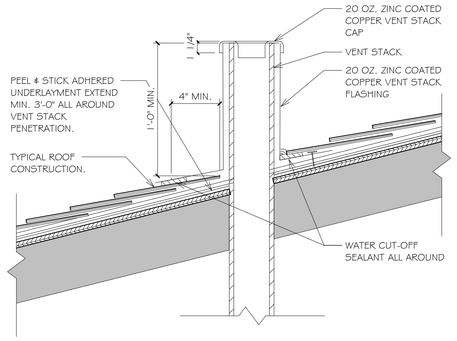

2 A-A5.1 VENT STACK
1 1/2" = 1'-0"

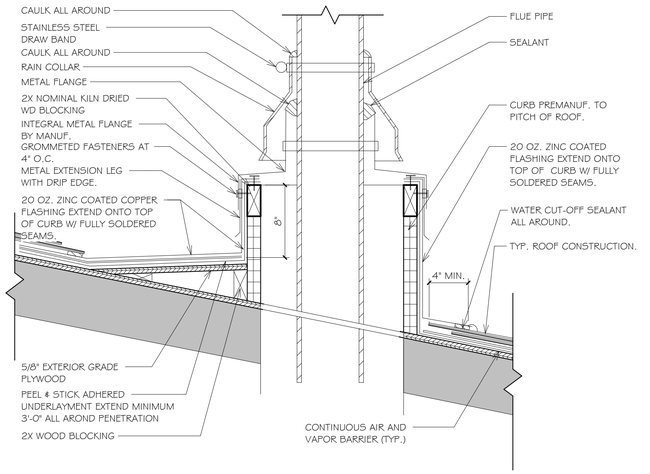

3 A-A5.1 FLUE STACK
1 1/2" = 1'-0"

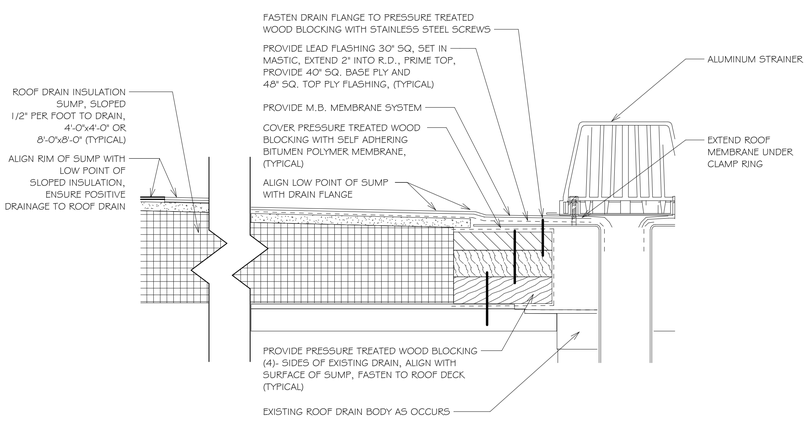

4 A-A5.1 SUMP & ROOF DRAIN INSERT DETAIL
3" = 1'-0"

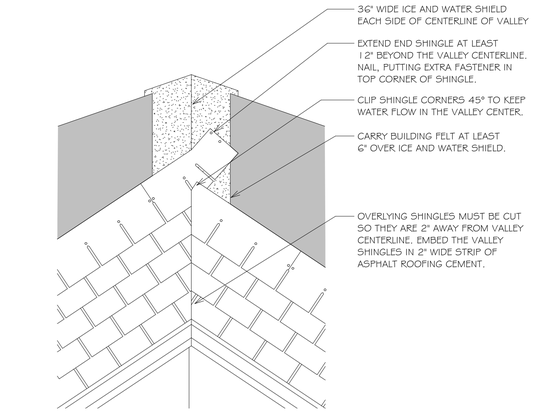

5 A-A5.1 VALLEY DETAIL - CLOSED CUT
1 1/2" = 1'-0"

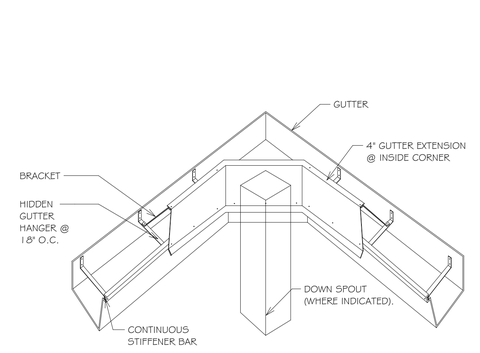

6 A-A5.1 GUTTER AT INSIDE CORNERS
1 1/2" = 1'-0"

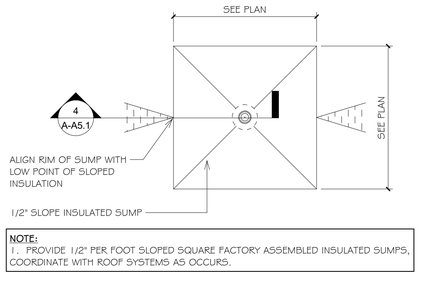

7 A-A5.1 SUMP & ROOF DRAIN DETAIL
1/4" = 1'-0"

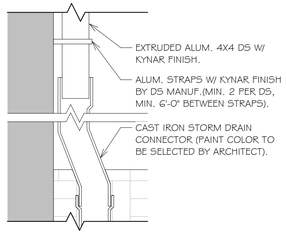

8 A-A5.1 DOWN SPOUT AND SHOE
1 1/2" = 1'-0"

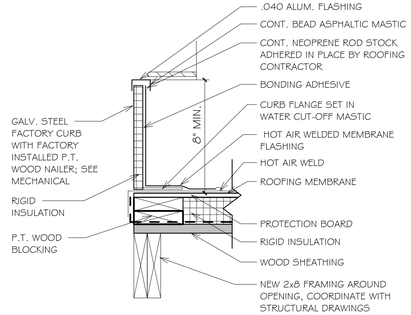

9 A-A5.1 TYPICAL ROOF CURB DETAIL
1 1/2" = 1'-0"

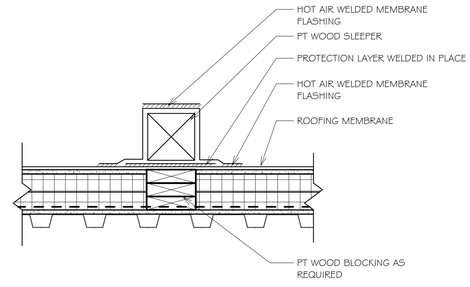

10 A-A5.1 SLEEPER DETAIL
1 1/2" = 1'-0"

ARCHITECTS
Saccoccio & Associates, Inc.
1085 Park Avenue
Cranston, Rhode Island
02910
tel 401.942.7970
fax 401.942.7975
Consultant

ROGER WILLIAMS PARK ZOO EDUCATION CENTER

ROGER WILLIAMS PARK ZOO
1000 ELMWOOD AVENUE,
PROVIDENCE, RI 02907

Revision Schedule	
Revision Number	Revision Date

ISSUED FOR BID
AUGUST 19, 2024

SHEET TITLE
ROOF DETAILS

DRAWN BY:	FK, KR	JOB NUMBER:	18050
CHECKED BY:	MS	DATE:	08-19-2024

A-A5.1

SHEET: OF:

SNAPNRACK FLASHED L FOOT FOR COMPOSTION ROOF MOUNTING

REFER TO SNAPNRACK ENGINEERING CHARTS FOR APPLICABLE RAIL SPANS. "BIN" NUMBER ON CHART SHOULD MATCH "BIN" NUMBER ON THIS DRAWING

5/16"Ø S.S. LAG SCREW MUST EMBED A MIN. OF 2½" INTO STRUCTURAL MEMBER

REFER TO SNAPNRACK INSTALLATION MANUAL FOR 5/16"Ø HARDWARE TORQUE SPECIFICATIONS

RAIL CAN BE MOUNTED ON EITHER SIDE OF THE L-FOOT

FOR LEVELING DETAILS, REFER TO SNAPNRACK DETAIL DRAWING "SNR-DC-00332 ULTRA RAIL, COMPONENT DETAIL, LEVELING EXTENSION KIT" AND/OR "SNR-DC-00333 ULTRA RAIL, COMPONENT DETAIL, LEVELING SPACER ON FLASHED L FOOT"

***THE FLASHED L FOOT BASE IS COMPATIBLE WITH THE FOLLOWING SNAPNRACK L FOOT ASSEMBLIES:**

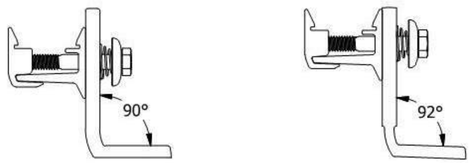

ULTRA RAIL ALL PURPOSE 90° L FOOT:
BIN 5

ULTRA RAIL 92° L FOOT:
BIN 3

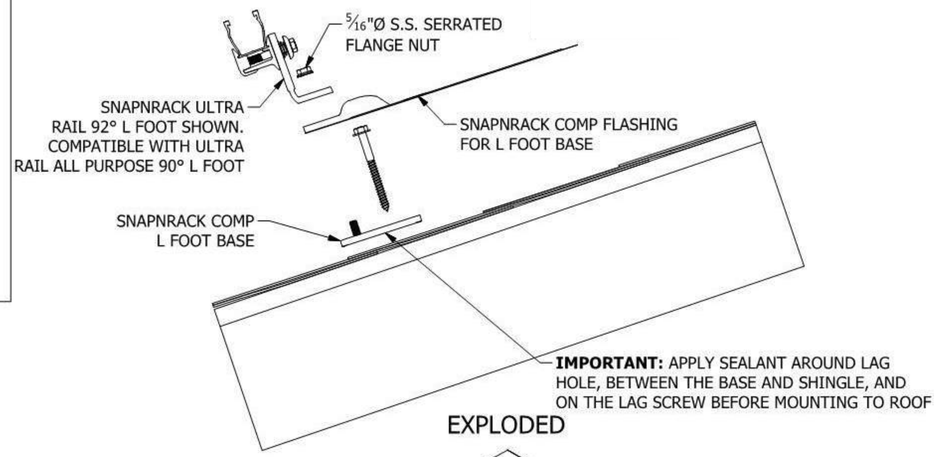

EXPLODED

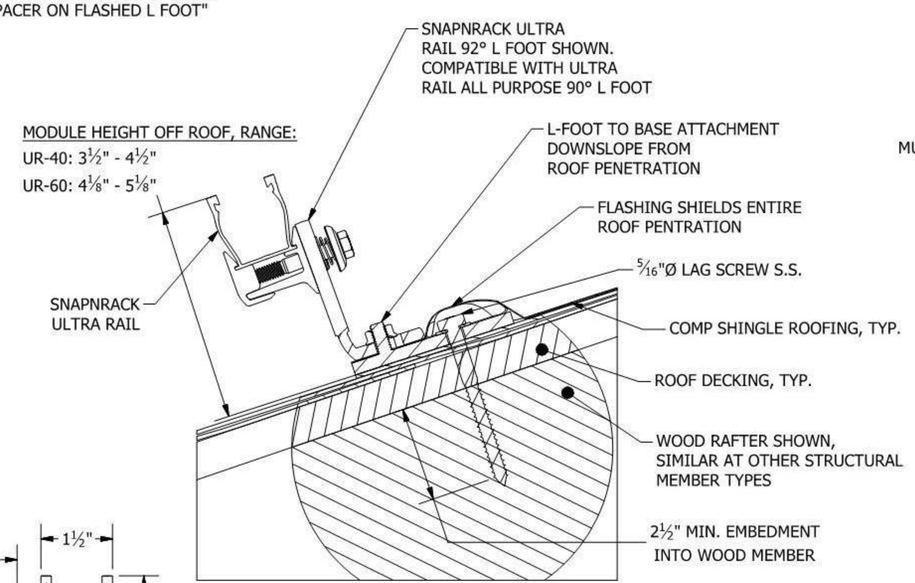

PENETRATION DETAIL

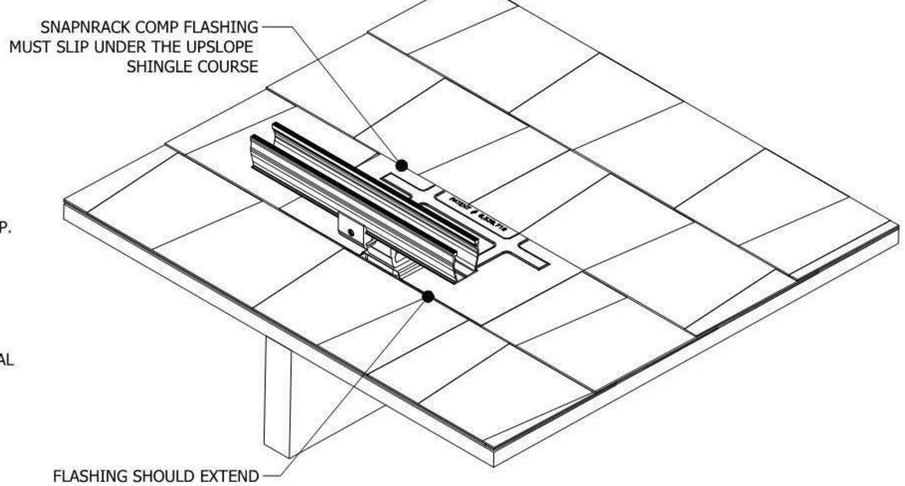

INSTALLED VIEW

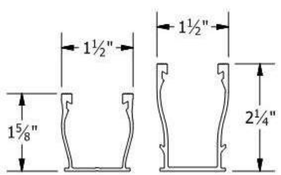

UR-40 RAIL | UR-60 RAIL
FOR USE WITH SNAPNRACK ULTRA SERIES RAILS

1 / A-A5.2 PV MOUNTING DETAIL
1 1/2" = 1'-0"

ARCHITECTS
Saccoccio & Associates, Inc.
1085 Park Avenue
Cranston, Rhode Island
02910
tel 401.942.7970
fax 401.942.7975
Consultant

ROGER WILLIAMS PARK ZOO EDUCATION CENTER

ROGER WILLIAMS PARK ZOO
1000 ELMWOOD AVENUE,
PROVIDENCE, RI 02907

Revision Schedule	
Revision Number	Revision Date

ISSUED FOR BID
AUGUST 19, 2024

SHEET TITLE

PV PANEL ROOF ATTACHMENT DETAIL

DRAWN BY:	KR	JOB NUMBER:	18050
CHECKED BY:	MS	DATE:	08-19-2024

A-A5.2

SHEET: OF:

DOOR SCHEDULE

NUMBER	TO ROOM	DOOR WIDTH	DOOR HEIGHT	DOOR THICKNESS	DOOR ELEV	DOOR MATERIAL	DOOR FINISH	DOOR GLAZING	FRAME ELEV	FRAME MATERIAL	FRAME FINISH	FIRE RATING	DETAILS HEAD	DETAILS JAMB	HARDWARE	COMMENTS
A100	STAIR	6' - 0"	7' - 0"	0' - 1 3/4"	D7	ALUM	FF	FR/SFTY	F3	ALUM	FF	45 MIN	H2	J2	4	
A103	PRE-K VESTIBULE	3' - 0"	7' - 0"	0' - 1 3/4"	D5	ALUM	FF	TEMP	F7	ALUM	FF		H2	J2		
A104	PRE-K 1	3' - 0"	7' - 0"	0' - 1 3/4"	D3	WD	S#F	TEMP	F1	HM	PNT		H2	J2	7	
A104a	PRE-K 1	3' - 0"	7' - 0"	0' - 1 3/4"	D5	ALUM	FF	INSUL	F6	ALUM	FF				1	WEATHERSTRIPING
A104b	STORAGE	3' - 0"	7' - 0"	0' - 1 3/4"	D1	WD	S#F	-	F1	HM	PNT		H2	J2	20	
A104c	LOBBY	0' - 0"	0' - 0"													
A106	PRE-K VESTIBULE	3' - 0"	7' - 0"	0' - 1 3/4"	D3	WD	S#F	TEMP	F1	HM	PNT		H2	J2		
A106a	PRE-K 2	3' - 0"	7' - 0"	0' - 1 3/4"	D5	ALUM	FF	INSUL	F6	ALUM	FF				1	WEATHERSTRIPING
A106b	STORAGE	3' - 0"	7' - 0"	0' - 1 3/4"	D1	WD	S#F	INSUL	F1	HM	PNT		H2	J2	20	
A107	CLASSROOM 3	3' - 0"	7' - 0"	0' - 1 3/4"	D3	WD	S#F	TEMP	F1	HM	PNT		H2	J2	7	
A107a	CLASSROOM 3	3' - 0"	7' - 0"	0' - 1 3/4"	D5	ALUM	FF	INSUL	F6	ALUM	FF				1	WEATHERSTRIPING
A108	CLASSROOM 4	3' - 0"	7' - 0"	0' - 1 3/4"	D3	WD	S#F	TEMP	F1	HM	PNT		H2	J2	7	
A108a	CLASSROOM 4	3' - 0"	7' - 0"	0' - 1 3/4"	D5	ALUM	FF	INSUL	F6	ALUM	FF				1	WEATHERSTRIPING
A109	CLASSROOM 5	3' - 0"	7' - 0"	0' - 1 3/4"	D3	WD	S#F	TEMP	F7	HM	PNT		H2	J2	7	
A109a	CLASSROOM 5	3' - 0"	7' - 0"	0' - 1 3/4"	D5	ALUM	FF	INSUL	F6	ALUM	FF				1	WEATHERSTRIPING
A110	CORRIDOR	3' - 0"	7' - 0"	0' - 1 3/4"	D5	ALUM	FF	INSUL	F1	ALUM	FF				1	WEATHERSTRIPING
A111	ELEV MECH	3' - 0"	7' - 0"	0' - 1 3/4"	D1	WD	S#F	-	F1	HM	PNT		H2	J2	11	
A113	JANITOR	3' - 0"	7' - 0"	0' - 1 3/4"	D1	WD	S#F	-	F1	HM	PNT		H2	J2	12	
A114	MEN'S	3' - 0"	7' - 0"	0' - 1 3/4"	D1	WD	S#F	-	F1	HM	PNT		H2	J2	8	
A115	WOMEN'S	3' - 0"	7' - 0"	0' - 1 3/4"	D1	WD	S#F	-	F1	HM	PNT		H2	J2	8	
A116	MECHANICAL	3' - 0"	7' - 0"	0' - 1 3/4"	D1	HM	PNT	-	F1	HM	PNT		H2	J2	12	
A117	MECHANICAL	6' - 0"	7' - 0"	0' - 1 3/4"	D1	GHM	PNT	-	F3	GHM	PNT				24	WEATHERSTRIPING
A118	TOILET	3' - 0"	7' - 0"	0' - 1 3/4"	D1	WD	S#F	-	F1	HM	PNT		H2	J2	15	
A119	TOILET	3' - 0"	7' - 0"	0' - 1 3/4"	D1	WD	S#F	-	F1	HM	PNT		H2	J2	16	
A120	NURSE	3' - 0"	7' - 0"	0' - 1 3/4"	D1	WD	S#F	-	F1	HM	PNT		H2	J2	25	
A121	BREAKROOM	3' - 0"	7' - 0"	0' - 1 3/4"	D3	WD	S#F	TEMP	F1	HM	PNT		H2	J2	9	
A122	STORAGE	6' - 0"	7' - 0"	0' - 1 3/4"	D1	WD	S#F	-	F3	HM	PNT		H2	J2	14	
A123	STOR.	3' - 0"	7' - 0"	0' - 1 3/4"	D1	WD	S#F	-	F1	HM	PNT		H2	J2	12	
A200	VEST.	6' - 0"	7' - 6"	0' - 1 3/4"	D7	ALUM	FF	INSUL		ALUM	FF				2	WEATHERSTRIPING
A200a	LOBBY	6' - 0"	7' - 6"	0' - 1 3/4"	D7	ALUM	FF	TEMP		ALUM	FF		H2	J2	1	
A202	TOILET	3' - 0"	7' - 0"	0' - 1 3/4"	D1	WD	S#F	-	F1	HM	PNT		H2	J2	15	
A203	CORRIDOR	3' - 0"	7' - 0"	0' - 1 3/4"	D4	WD	S#F	TEMP	F1	HM	PNT		H2	J2	3	
A204	TOILET	3' - 0"	7' - 0"	0' - 1 3/4"	D1	WD	S#F	-	F1	HM	PNT		H2	J2	15	
A205	OFFICE 6	3' - 0"	7' - 0"	0' - 1 3/4"	D3	WD	S#F	TEMP	F1	HM	PNT		H2	J2	10	
A206	OFFICE 5	3' - 0"	7' - 0"	0' - 1 3/4"	D3	WD	S#F	TEMP	F1	HM	PNT		H2	J2	10	
A207	CONF. RM	3' - 0"	7' - 0"	0' - 1 3/4"	D4	WD	S#F	TEMP	F1	HM	PNT		H2	J2	10	
A208	OFFICE 4	3' - 0"	7' - 0"	0' - 1 3/4"	D3	WD	S#F	TEMP	F1	HM	PNT		H2	J2	10	
A209	OFFICE 3	3' - 0"	7' - 0"	0' - 1 3/4"	D3	WD	S#F	TEMP	F1	HM	PNT		H2	J2	10	
A210	OFFICE 2	3' - 0"	7' - 0"	0' - 1 3/4"	D3	WD	S#F	TEMP	F1	HM	PNT		H2	J2	10	
A211	OFFICE 1	3' - 0"	7' - 0"	0' - 1 3/4"	D3	WD	S#F	TEMP	F1	HM	PNT		H2	J2	10	
A213	MECH/ELEC	3' - 0"	7' - 0"	0' - 1 3/4"	D1	WD	S#F	-	F1	HM	PNT		H2	J2	12	
A214	OPEN OFFICE	3' - 0"	7' - 0"	0' - 1 3/4"	D4	WD	S#F	TEMP	F1	HM	PNT		H2	J2	3	
A215	ENRICHMENT AREA	3' - 0"	7' - 6"	0' - 1 3/4"	D4	ALUM	FF	TEMP		ALUM	FF		H2	J2	1	
A216	OFFICE	3' - 0"	7' - 0"	0' - 1 3/4"	D2	WD	S#F	TEMP	F1	HM	PT		H2	J2	25	

DOOR SCHEDULE NOTES

1. ANY DOOR (UNLESS EXISTING) FOUND ON OTHER DRAWINGS BUT NOT INDICATED ON THE DOOR SCHEDULE SHALL BE CONSIDERED MINIMALLY AS A 3'-0" x 7'-0" DOOR HAVING A CLEAR COATED SOLID WOOD SLAB WITH A PAINTED HOLLOW METAL FRAME. NOTIFY ARCHITECT OF MISSING DOOR PRIOR TO ORDERING DOOR OR COMMENCING WORK.
2. ALL DOOR FRAMES SCHEDULED TO BE INSTALLED IN MASONRY WALLS SHALL HAVE 4" HEAD HEIGHTS.
3. ALL DOOR FRAME ASSEMBLIES ARE TO BE MINIMUM LABEL NOTED FOR ITS DOOR.
4. ALL DOOR GLAZING IS TO BE MINIMUM LABEL NOTED FOR ITS DOOR.
5. ALL WD DOORS ARE SOLID CORE WOOD DOORS AND ARE TO RECEIVE CLEAR FINISHES.
6. ALL HM DOORS AND FRAMES ARE TO BE PAINTED.
7. FIRE RATINGS AND EXIT DEVICES SHALL BE PROVIDED PER THE APPLICABLE CODE.

SCHEDULE LEGEND

- = NO WORK NEEDED
ACT = ACOUSTICAL CEILING TILE
ACTT = ACOUSTICAL CEILING TILE-TEGULAR
ALUM = ALUMINUM
B = BASE
CBB = CEMENTITIOUS BACKER BOARD
CMU = CONCRETE MASONRY UNIT
CONC = CONCRETE
CFT = CERAMIC FLOOR TILE
CWT = CERAMIC WALL TILE
CRPT = BROADLOOM CARPET
CPTT = CARPET TILE
ECT = ENTRANCE CARPET TILE
EXT = EXISTING
FF = FACTORY FINISHED
FIN = FINISH
FLR = FLOOR
FRP = FIBERGLASS REINFORCED PANEL
FRS = FIRE-RATED SAFETY GLASS
GWB = GYPSUM WALL BOARD
GHM = GALVANIZED HOLLOW METAL
HM = HOLLOW METAL
IRG = IMPACT RESISTANT GLASS
INSUL = INSULATED
MAS = MASONRY
MAT = MATERIAL
MRT = MOISTURE RESISTANT TILE
OTS = OPEN TO STRUCTURE
PT = PAINT
RAF = RESILIENT ATHLETIC FLOORING
RM = ROOM
RMK = REMARK
S#F = STAIN # FINISH
SDT = STATIC DISSIPATING TILE
SEAL = SEALED CONCRETE
SS = SOLID SURFACING MATERIAL (QUARTZ)
SV = SHEET VINYL
SWG = SPECIAL WALL GLAZE
TEMP = TEMPERED
VAS = VERIFY AT SITE
VCB = VINYL COVE BASE
VCT = VINYL COMPOSITE TILE
VT = VINYL TILE
VWC = VINYL WALL COVERING
WD = WOOD

REQUIRED CLEARANCES AT DOORS

FRONT APPROACH, PULL SIDE

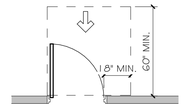

FRONT APPROACH, PUSH SIDE

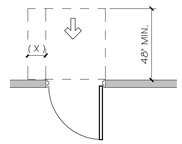

(X) = 12" MINIMUM IF DOOR HAS BOTH A CLOSER AND LATCH.

HINGE APPROACH, PULL SIDE

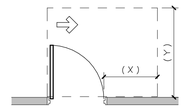

(X)= 36" MINIMUM IF (Y)= 60" MINIMUM
(X)= 42" MINIMUM IF (Y)= 54" MINIMUM

HINGE APPROACH, PUSH SIDE

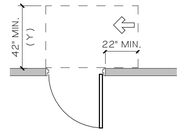

(Y) = 48" MINIMUM IF DOOR HAS BOTH A CLOSER AND LATCH.

LATCH APPROACH, PULL SIDE

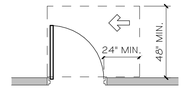

(Y) = 54" MINIMUM IF DOOR HAS BOTH A CLOSER AND LATCH.

LATCH APPROACH, PUSH SIDE

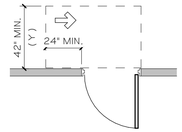

(Y) = 48" MINIMUM IF DOOR HAS BOTH A CLOSER AND LATCH.

ARCHITECTS

Saccoccio & Associates, Inc.

1085 Park Avenue
Cranston, Rhode Island
02910

tel 401.942.7970
fax 401.942.7975

Consultant

ROGER WILLIAMS PARK ZOO EDUCATION CENTER

ROGER WILLIAMS PARK ZOO

1000 ELMWOOD AVENUE,
PROVIDENCE, RI 02907

Revision Schedule	
Revision Number	Revision Date

ISSUED FOR BID
AUGUST 19, 2024

SHEET TITLE

DOOR SCHEDULE

DRAWN BY:	KR	JOB NUMBER:	18050
CHECKED BY:	MS	DATE:	08-19-2024

A-A6.0

SHEET: OF:

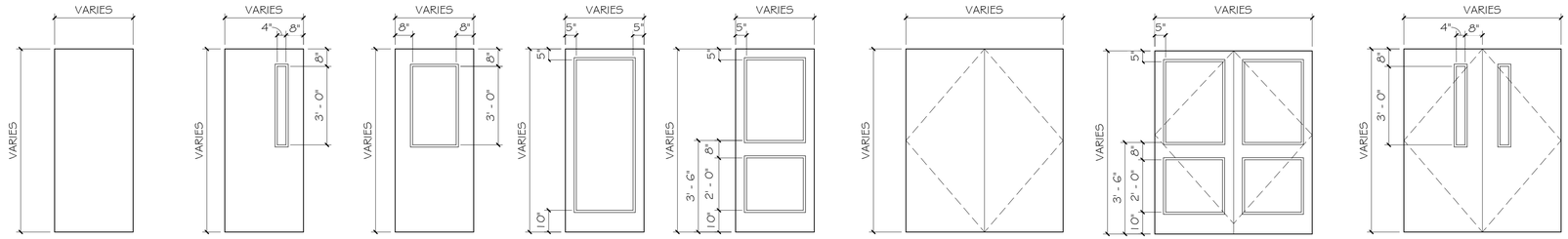

D1 D2 D3 D4 D5 D6 D7 D8

1 A-A6.1 DOOR TYPES

3/8" = 1'-0"

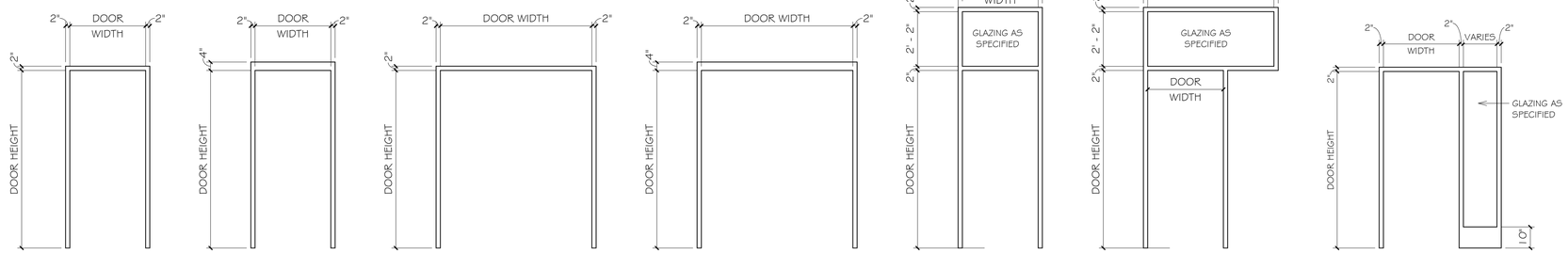

F1 F2 F3 F4 F5 F6 F7

2 A-A6.1 FRAME TYPES

3/8" = 1'-0"

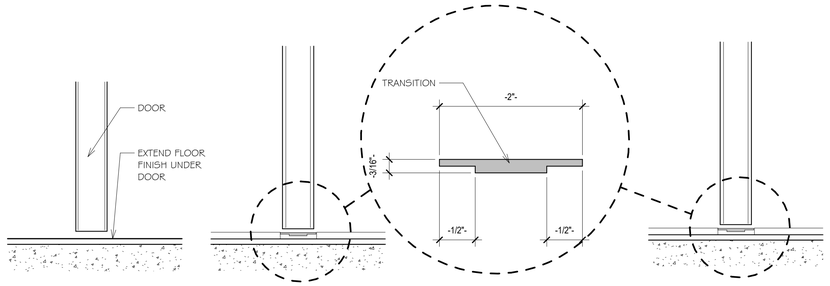

T1 CONTINOUS MATERIAL

T2 VCT TO SHEET GOODS

T3 SHEET GOODS TO SHEET GOODS

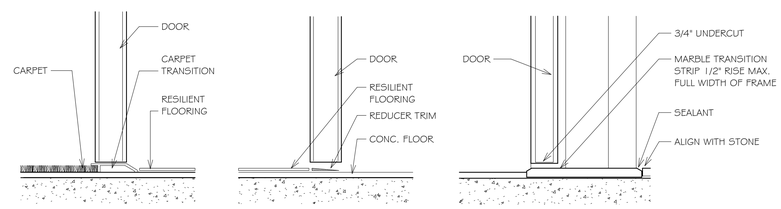

T4 CARPET TO RESILIENT

T5 FLOOR FINISH TO CONCRETE

T6 TYP. STONE THRESHOLD

3 A-A6.1 INTERIOR THRESHOLD DETAILS

3" = 1'-0"

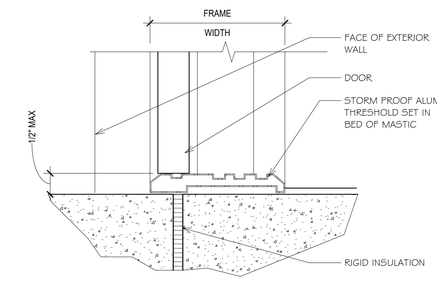

4 A-A6.1 EXTERIOR THRESHOLDS

3" = 1'-0"

ARCHITECTS

Saccoccio & Associates, Inc.

1085 Park Avenue
Cranston, Rhode Island
02910

tel 401.942.7970
fax 401.942.7975

Consultant

ROGER WILLIAMS PARK ZOO EDUCATION CENTER

ROGER WILLIAMS PARK ZOO

1000 ELMWOOD AVENUE,
PROVIDENCE, RI 02907

Revision Schedule	
Revision Number	Revision Date

ISSUED FOR BID
AUGUST 19, 2024

SHEET TITLE

DOOR & FRAME TYPES

DRAWN BY:	FK, KR	JOB NUMBER:	18050
CHECKED BY:	MS	DATE:	08-19-2024

A-A6.1

SHEET: OF:

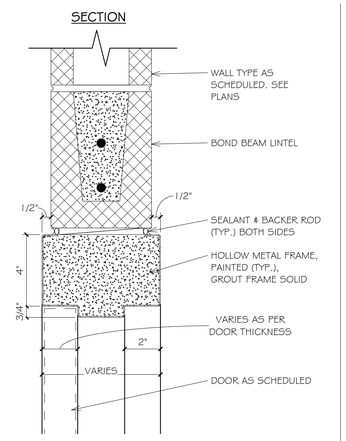

H1 DOOR HEAD DETAIL @ MASONRY PARTITION

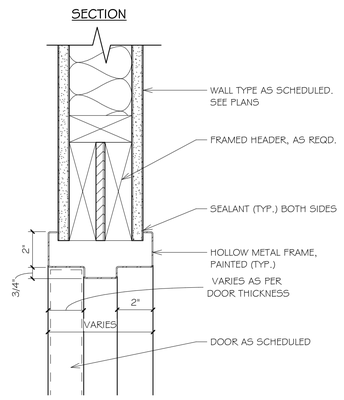

H2 DOOR HEAD DETAIL @ STUD PARTITION

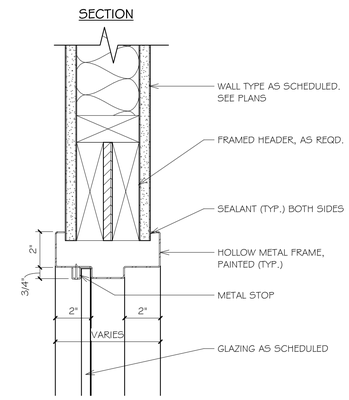

H3 SIDELITE / WINDOW HEAD DETAIL @ STUD PARTITION

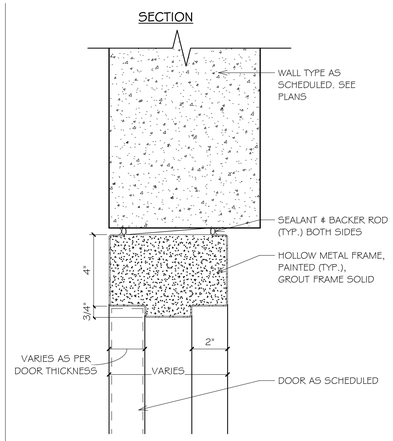

H4 DOOR HEAD DETAIL @ FOUNDATION WALL

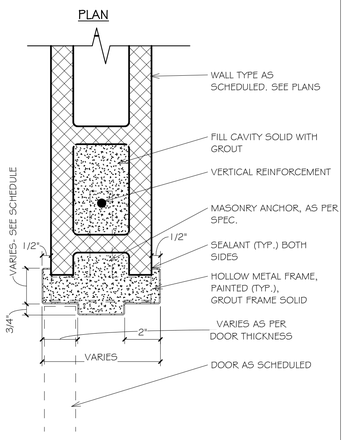

J1 DOOR JAMB DETAIL @ MASONRY PARTITION

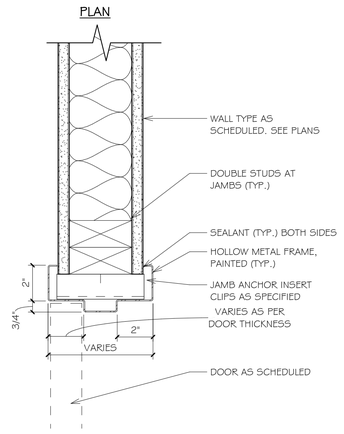

J2 DOOR JAMB DETAIL @ STUD PARTITION

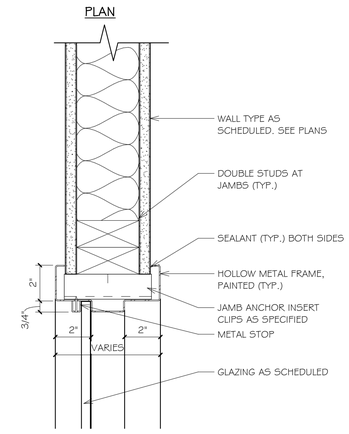

J3 SIDELITE / WINDOW JAMB DETAIL @ STUD PARTITION

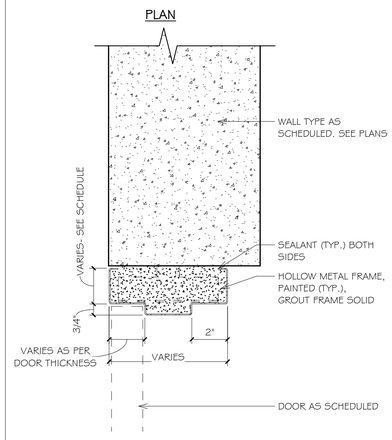

J4 DOOR JAMB DETAIL @ FOUNDATION WALL

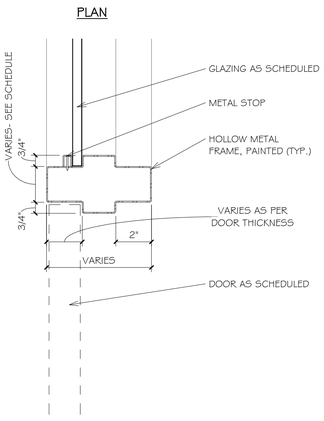

J5 JAMB DETAIL - DOOR / SIDELITE

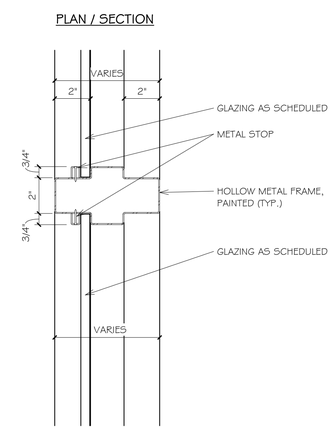

M1 SIDELITE / WINDOW MULLION DETAIL

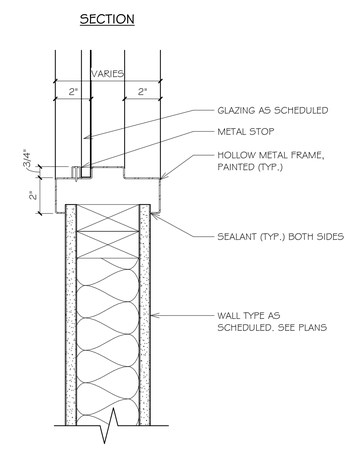

S1 SIDELITE / WINDOW SILL DETAIL @ STUD PARTITION

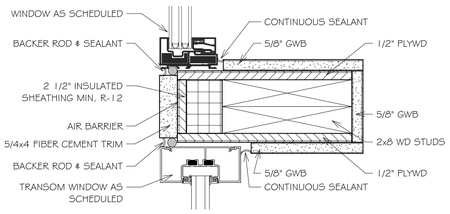

1 A-A6.2 DOOR FRAME TO WINDOW DETAIL

3" = 1'-0"

ARCHITECTS

Saccoccio & Associates, Inc.

1085 Park Avenue
Cranston, Rhode Island
02910

tel 401.942.7970
fax 401.942.7975

Consultant

ROGER WILLIAMS PARK ZOO EDUCATION CENTER

ROGER WILLIAMS PARK ZOO

1000 ELMWOOD AVENUE,
PROVIDENCE, RI 02907

Revision Schedule	
Revision Number	Revision Date

ISSUED FOR BID
AUGUST 19, 2024

SHEET TITLE

DOOR & WINDOW DETAILS

DRAWN BY:	KR	JOB NUMBER:	18050
CHECKED BY:	MS	DATE:	08-19-2024

A-A6.2

SHEET: OF:

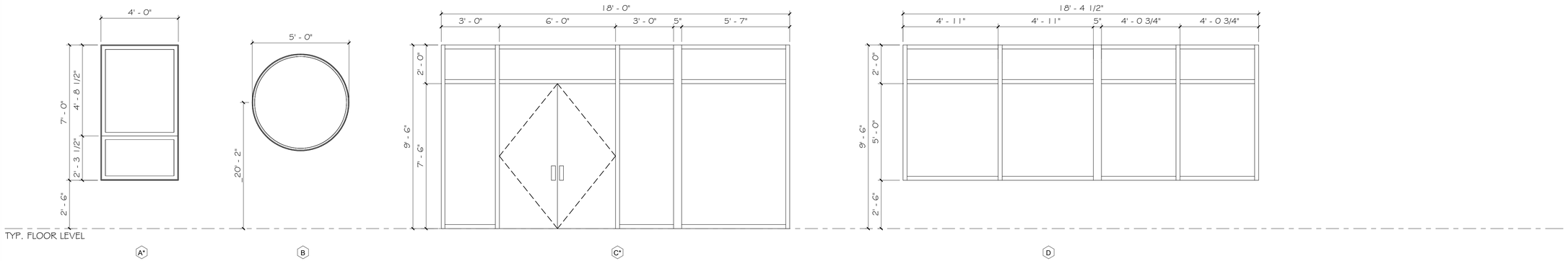

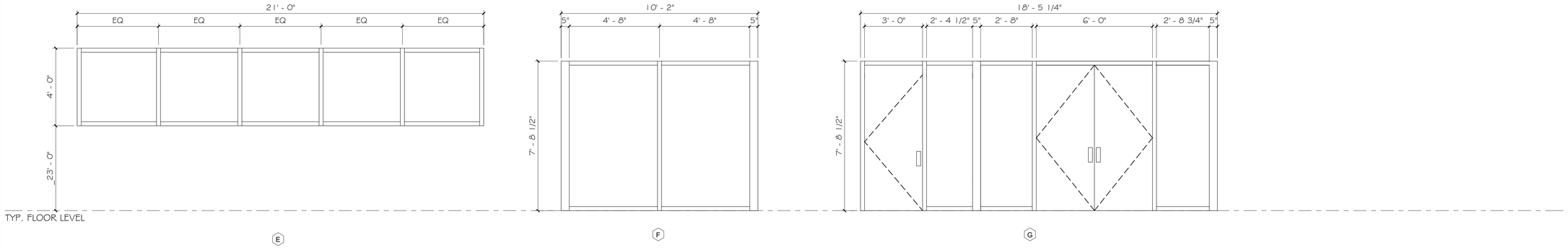

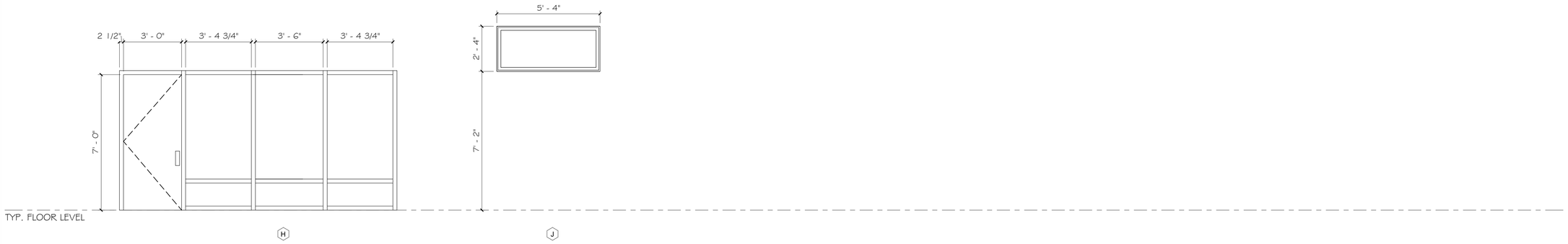

LEGEND:
* - INDICATES WINDOWS THAT MAY HAVE SECURITY FILM. SEE EXTERIOR ELEVATIONS & SPECIFICATIONS FOR MORE INFORMATION

WINDOW TYPES

3/8" = 1'-0"

ARCHITECTS

Saccoccio & Associates, Inc.

1085 Park Avenue
Cranston, Rhode Island
02910

tel 401.942.7970
fax 401.942.7975

Consultant

ROGER WILLIAMS PARK ZOO EDUCATION CENTER

ROGER WILLIAMS PARK ZOO

1000 ELMWOOD AVENUE,
PROVIDENCE, RI 02907

Revision Schedule	
Revision Number	Revision Date

ISSUED FOR BID
AUGUST 19, 2024

SHEET TITLE

WINDOW TYPES

DRAWN BY:	KR	JOB NUMBER:	18050
CHECKED BY:	MS	DATE:	08-19-2024

A-A6.3

SHEET: OF:

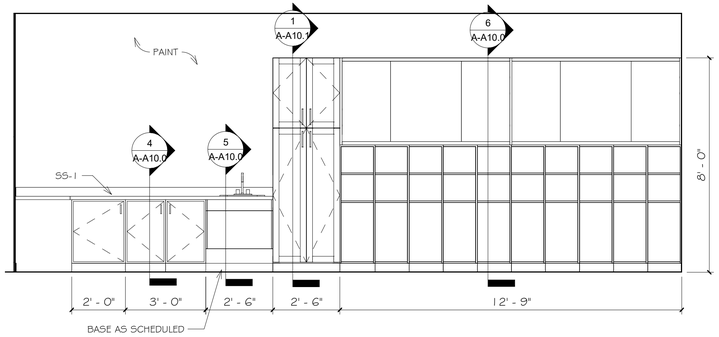

1 A-A7.0 **A104 - PRE-K 1 NORTH ELEVATION**

3/8" = 1'-0"

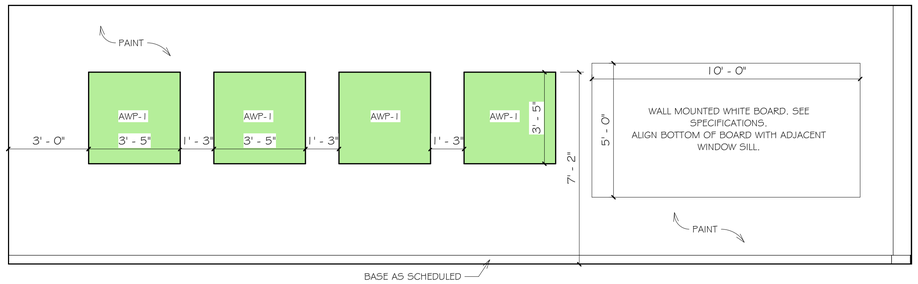

NOTES:

1. SEE SHEET G1.0 FOR MOUNTING HEIGHTS AND MORE INFORMATION.
2. ALL EXPOSED SIDE AND BOTTOM CASEWORK PANELS ARE TO BE OF FINISH QUALITY.
3. PROVIDE FINISHED FILLER PANELS/STRIPS AT TOPS/BOTTOMS/SIDES AS REQUIRED TO COMPLETE EACH RUN OF UPPER AND LOWER CASEWORK.
4. PROVIDE BLOCKING (FIRE-TREATED WHERE REQUIRED) FOR ALL CASEWORK, MILLWORK, STANDING & RUNNING TRIM, FIXTURES, EQUIPMENT, SHELVING, BRACKETS, RESTROOM ACCESSORIES AND ALL OTHER INCIDENTAL ITEMS AS REQUIRED FOR THEIR INSTALLATION.
5. ALL TOE KICKS IN CASEWORK TO RECEIVE BASE SIMILAR TO BASE WITHIN ROOM.

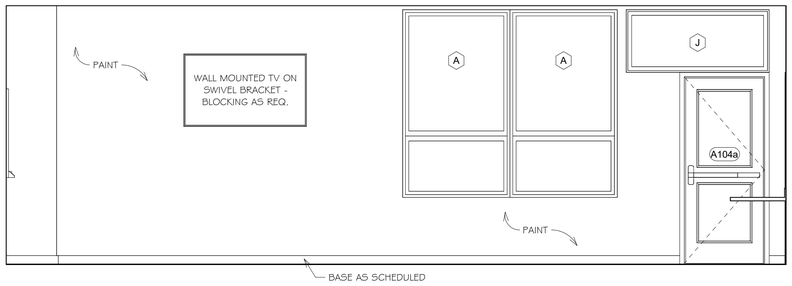

3 A-A7.0 **A104 - PRE-K 1 SOUTH ELEVATION**

3/8" = 1'-0"

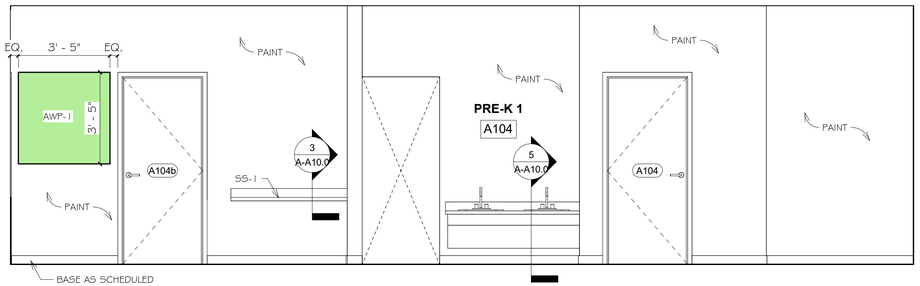

4 A-A7.0 **A104 - PRE-K 1 - WEST ELEVATION**

3/8" = 1'-0"

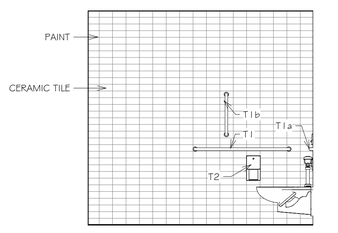

5 A-A7.0 **A106a TOILET - NORTH**

3/8" = 1'-0" TYPICAL FOR A104a & A106a

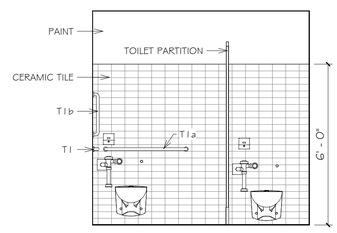

6 A-A7.0 **A106a TOILET - EAST**

3/8" = 1'-0" TYPICAL FOR A104a & A106a

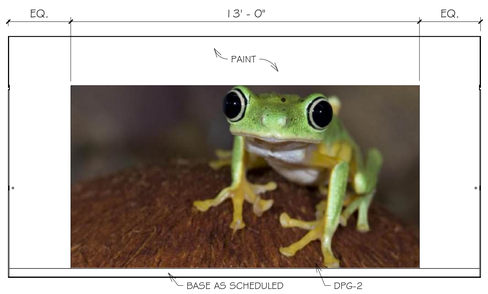

9 A-A7.0 **A103 PRE-K VESTIBULE**

3/8" = 1'-0"

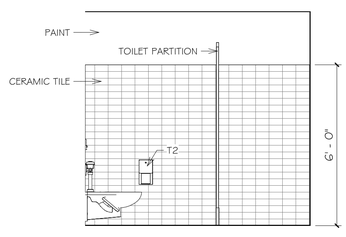

7 A-A7.0 **A106a TOILET - SOUTH**

3/8" = 1'-0" TYPICAL FOR A104a & A106a

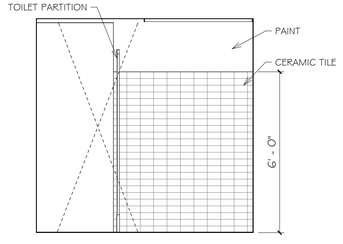

8 A-A7.0 **A106a TOILET - WEST**

3/8" = 1'-0" TYPICAL FOR A104a & A106a

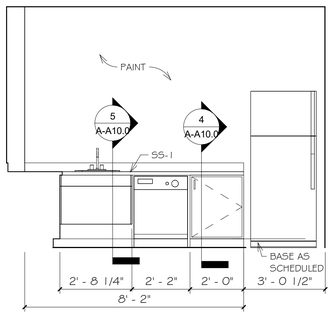

10 A-A7.0 **A121 BREAKROOM - EAST**

3/8" = 1'-0"

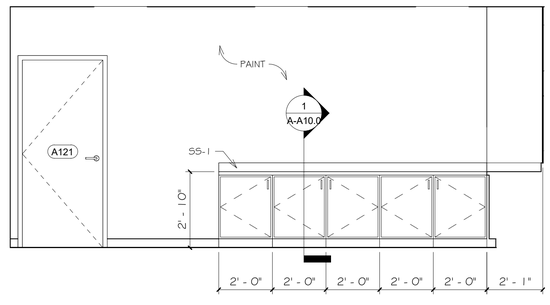

11 A-A7.0 **A121 BREAKROOM - NORTH**

3/8" = 1'-0"

ARCHITECTS

Saccoccio & Associates, Inc.

1085 Park Avenue
Cranston, Rhode Island
02910

tel 401.942.7970
fax 401.942.7975

Consultant

ROGER WILLIAMS PARK ZOO EDUCATION CENTER

ROGER WILLIAMS PARK ZOO

1000 ELMWOOD AVENUE,
PROVIDENCE, RI 02907

Revision Schedule	
Revision Number	Revision Date

ISSUED FOR BID
AUGUST 19, 2024

SHEET TITLE

INTERIOR ELEVATIONS

DRAWN BY:	FK	JOB NUMBER:	18050
CHECKED BY:	MS	DATE:	08-19-2024

A-A7.0

SHEET: OF:

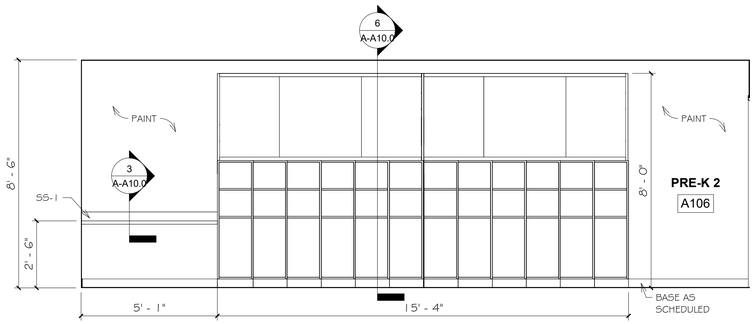

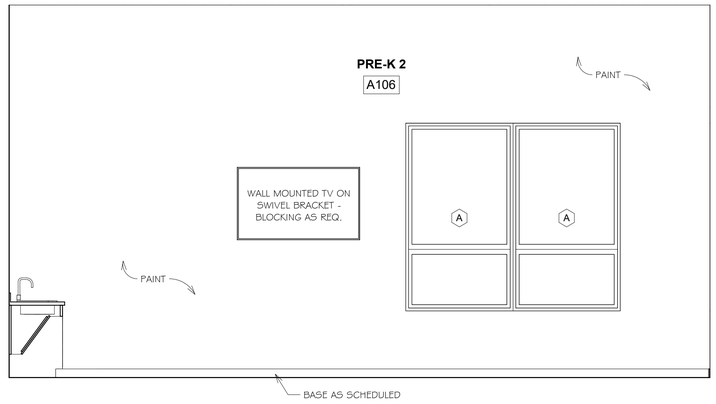

NOTES:

1. SEE SHEET G1.0 FOR MOUNTING HEIGHTS AND MORE INFORMATION.
2. ALL EXPOSED SIDE AND BOTTOM CASEWORK PANELS ARE TO BE OF FINISH QUALITY.
3. PROVIDE FINISHED FILLER PANELS/STRIPS AT TOPS/BOTTOMS/SIDES AS REQUIRED TO COMPLETE EACH RUN OF UPPER AND LOWER CASEWORK.
4. PROVIDE BLOCKING (FIRE-TREATED WHERE REQUIRED) FOR ALL CASEWORK, MILLWORK, STANDING & RUNNING TRIM, FIXTURES, EQUIPMENT, SHELVING, BRACKETS, RESTROOM ACCESSORIES AND ALL OTHER INCIDENTAL ITEMS AS REQUIRED FOR THEIR INSTALLATION.
5. ALL TOE KICKS IN CASEWORK TO RECEIVE BASE SIMILAR TO BASE WITHIN ROOM.

1 A-A7.1 A106 PRE-K 2 - NORTH

3/8" = 1'-0"

3 A-A7.1 A106 PRE-K 2 - SOUTH

3/8" = 1'-0"

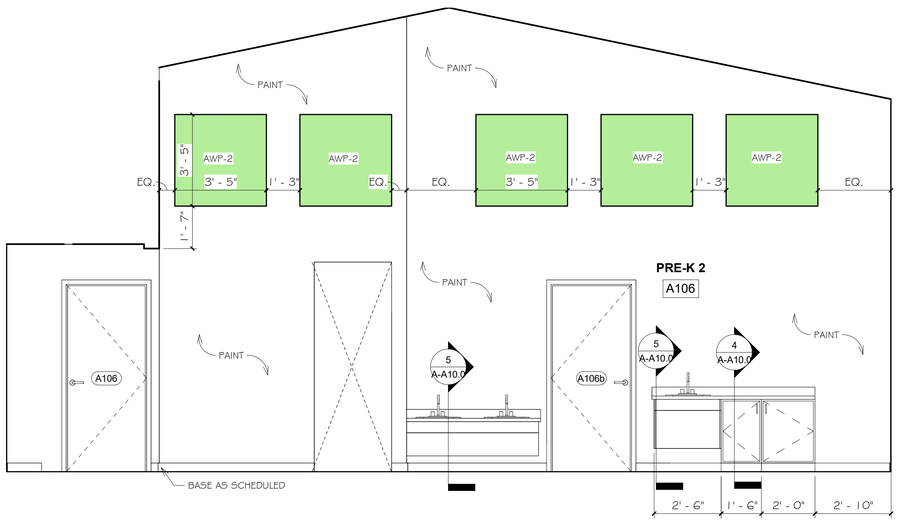

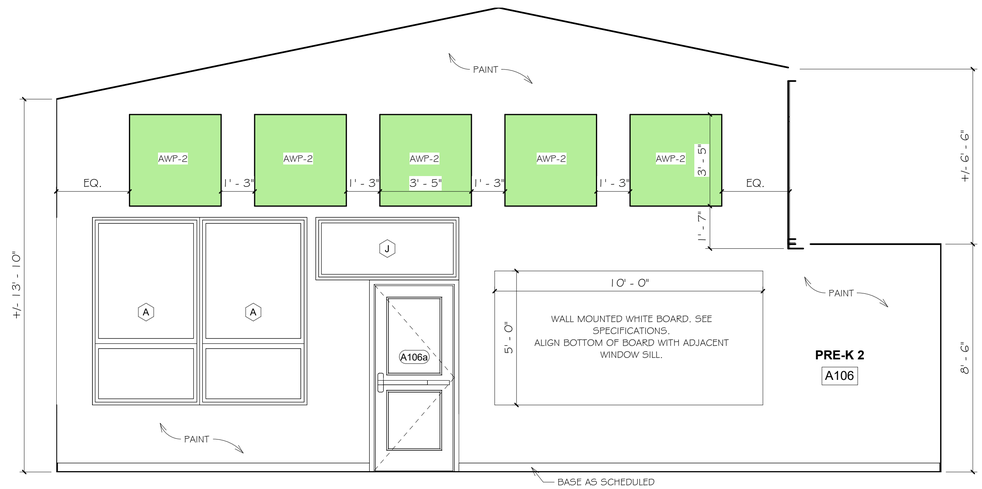

2 A-A7.1 A106 PRE-K 2 - EAST

3/8" = 1'-0"

4 A-A7.1 A106 PRE-K 2 - WEST

3/8" = 1'-0"

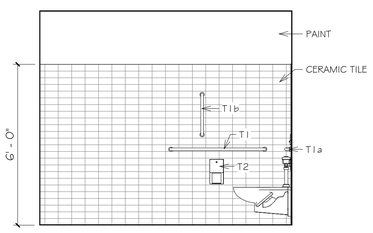

5 A-A7.1 A118 TOILET - NORTH

3/8" = 1'-0"

TYPICAL FOR A118 & A119

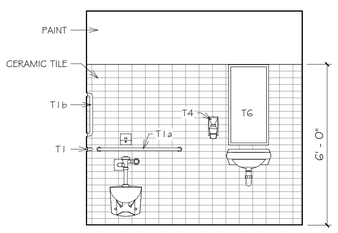

6 A-A7.1 A118 TOILET - EAST

3/8" = 1'-0"

TYPICAL FOR A118 & A119

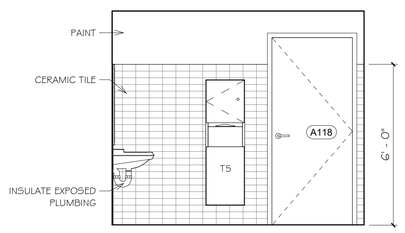

7 A-A7.1 A118 TOILET - SOUTH

3/8" = 1'-0"

TYPICAL FOR A118 & A119

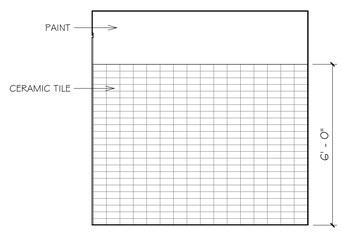

8 A-A7.1 A118 TOILET - WEST

3/8" = 1'-0"

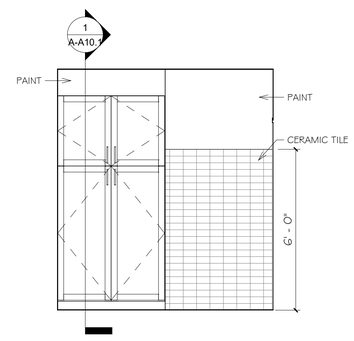

9 A-A7.1 A119 TOILET - EAST

3/8" = 1'-0"

ARCHITECTS

Saccoccio & Associates, Inc.

1085 Park Avenue
Cranston, Rhode Island
02910

tel 401.942.7970
fax 401.942.7975

Consultant

ROGER WILLIAMS PARK ZOO EDUCATION CENTER

ROGER WILLIAMS PARK ZOO

1000 ELMWOOD AVENUE,
PROVIDENCE, RI 02907

Revision Schedule	
Revision Number	Revision Date

ISSUED FOR BID
AUGUST 19, 2024

SHEET TITLE

INTERIOR ELEVATIONS

DRAWN BY:	FK, SOS	JOB NUMBER:	18050
CHECKED BY:	MS	DATE:	08-19-2024

A-A7.1

SHEET: OF:

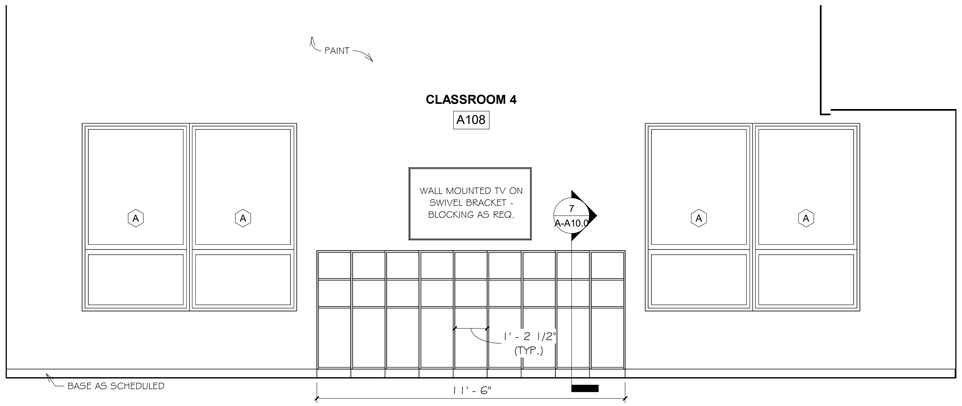

1 A-A7.2 **A108 CLASSROOM - NORTH**

3/8" = 1'-0"

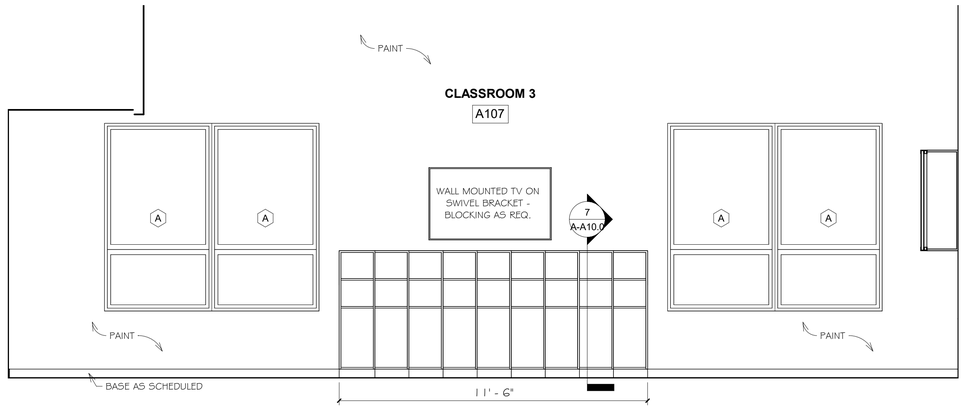

2 A-A7.2 **A107 CLASSROOM - SOUTH**

3/8" = 1'-0"

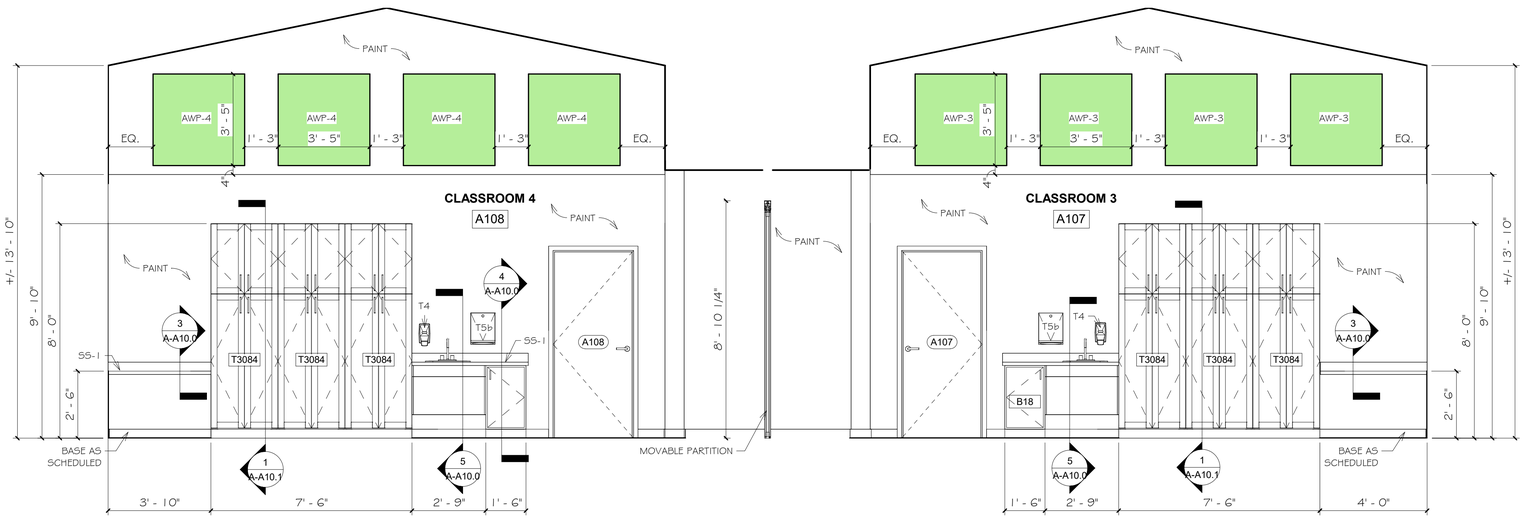

3 A-A7.2 **A107-A108 CLASSROOM - EAST**

3/8" = 1'-0"

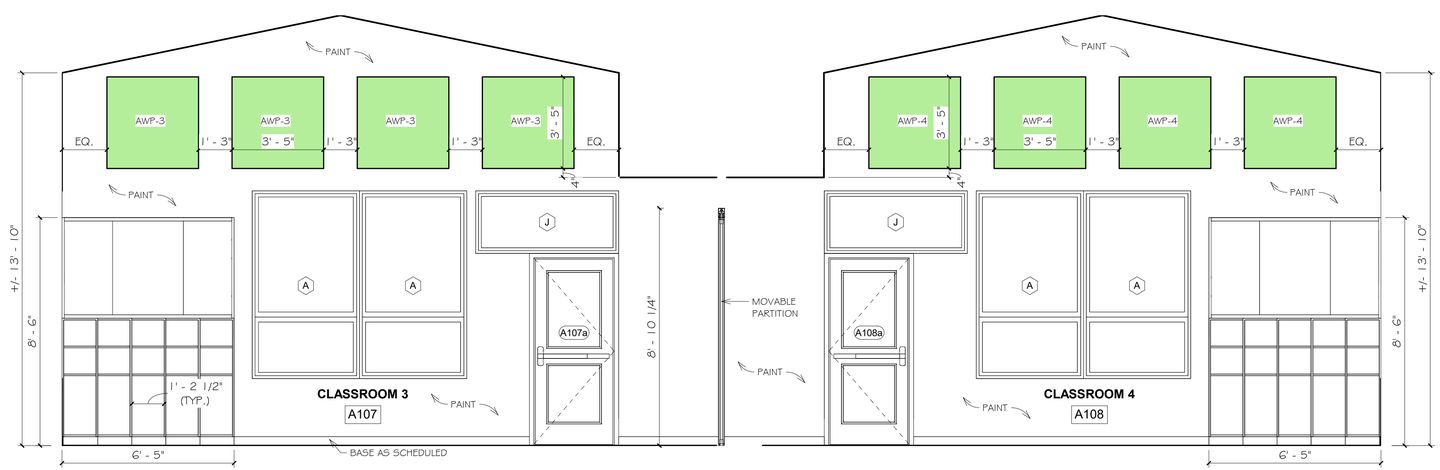

4 A-A7.2 **A107-A108 CLASSROOM - WEST**

3/8" = 1'-0"

NOTES:

1. SEE SHEET G1.0 FOR MOUNTING HEIGHTS AND MORE INFORMATION.
2. ALL EXPOSED SIDE AND BOTTOM CASEWORK PANELS ARE TO BE OF FINISH QUALITY.
3. PROVIDE FINISHED FILLER PANELS/STRIPS AT TOPS/BOTTOMS/SIDES AS REQUIRED TO COMPLETE EACH RUN OF UPPER AND LOWER CASEWORK.
4. PROVIDE BLOCKING (FIRE-TREATED WHERE REQUIRED) FOR ALL CASEWORK, MILLWORK, STANDING & RUNNING TRIM, FIXTURES, EQUIPMENT, SHELVING, BRACKETS, RESTROOM ACCESSORIES AND ALL OTHER INCIDENTAL ITEMS AS REQUIRED FOR THEIR INSTALLATION.
5. ALL TOE KICKS IN CASEWORK TO RECEIVE BASE SIMILAR TO BASE WITHIN ROOM.

ARCHITECTS

Saccoccio & Associates, Inc.

1085 Park Avenue
Cranston, Rhode Island
02910

tel 401.942.7970
fax 401.942.7975

Consultant

ROGER WILLIAMS PARK ZOO EDUCATION CENTER

ROGER WILLIAMS PARK ZOO

1000 ELMWOOD AVENUE,
PROVIDENCE, RI 02907

Revision Schedule	
Revision Number	Revision Date

ISSUED FOR BID
AUGUST 19, 2024

SHEET TITLE

INTERIOR ELEVATIONS

DRAWN BY:	FK, SOS	JOB NUMBER:	18050
CHECKED BY:	MS	DATE:	08-19-2024

A-A7.2

SHEET: OF:

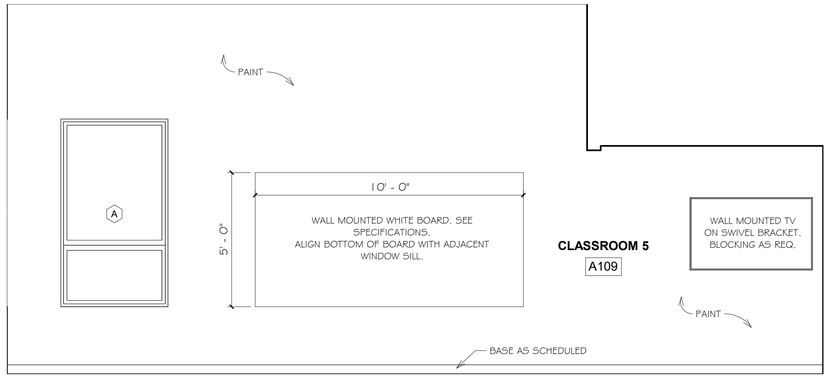

1 A-A7.3 A109 CLASSROOM - NORTH

3/8" = 1'-0"

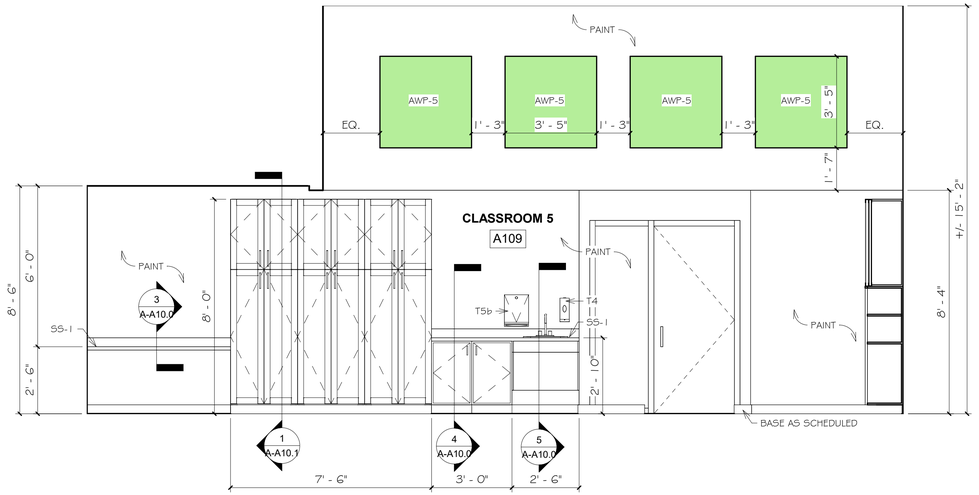

2 A-A7.3 A109 CLASSROOM - SOUTH

3/8" = 1'-0"

3 A-A7.3 A109 CLASSROOM - EAST

3/8" = 1'-0"

4 A-A7.3 A109 CLASSROOM - WEST

3/8" = 1'-0"

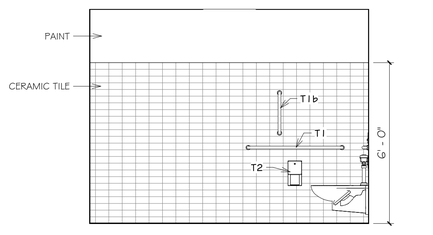

5 A-A7.3 A114 MEN'S - NORTH

3/8" = 1'-0"

TYPICAL FOR A114 & A115

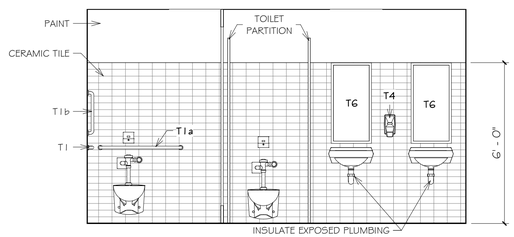

6 A-A7.3 A114 MEN'S - EAST

3/8" = 1'-0"

TYPICAL FOR A114 & A115

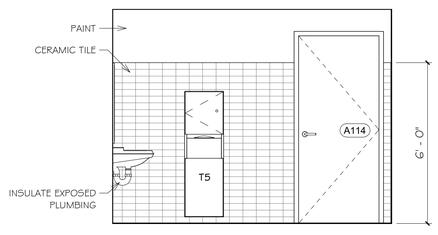

7 A-A7.3 A114 MEN'S - SOUTH

3/8" = 1'-0"

TYPICAL FOR A114 & A115

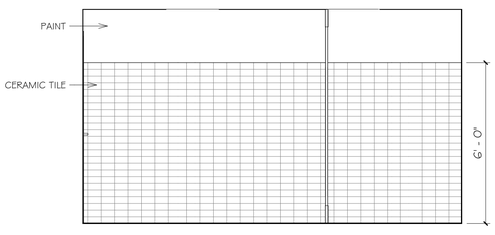

8 A-A7.3 A114 MEN'S - WEST

3/8" = 1'-0"

TYPICAL FOR A114 & A115

ARCHITECTS

Saccoccio & Associates, Inc.

1085 Park Avenue
Cranston, Rhode Island
02910

tel 401.942.7970
fax 401.942.7975

Consultant

ROGER WILLIAMS PARK ZOO EDUCATION CENTER

ROGER WILLIAMS PARK ZOO

1000 ELMWOOD AVENUE,
PROVIDENCE, RI 02907

Revision Schedule	
Revision Number	Revision Date

ISSUED FOR BID
AUGUST 19, 2024

SHEET TITLE

INTERIOR ELEVATIONS

DRAWN BY:	sos	JOB NUMBER:	18050
CHECKED BY:	MS	DATE:	08-19-2024

A-A7.3

SHEET: OF:

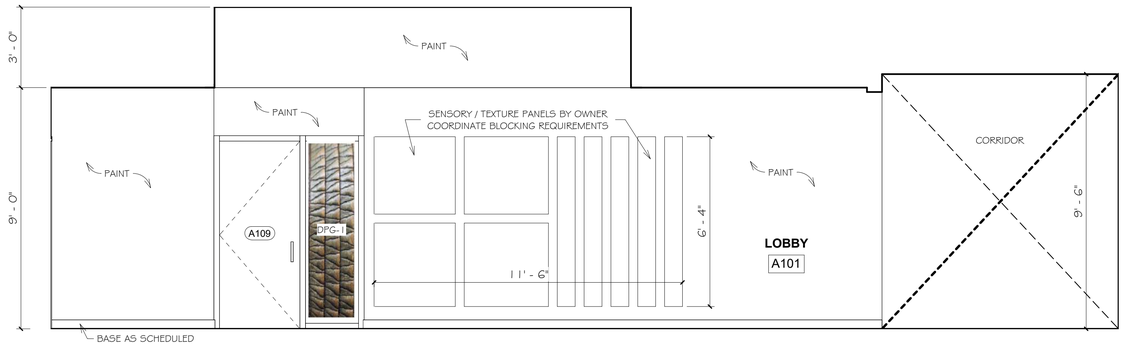

1 A-A7.4 **A101 LOBBY - NORTH**

3/8" = 1'-0"



2 A-A7.4 **A101 LOBBY - WEST**

3/8" = 1'-0"

NOTES:

1. SEE SHEET G1.0 FOR MOUNTING HEIGHTS AND MORE INFORMATION.
2. ALL EXPOSED SIDE AND BOTTOM CASEWORK PANELS ARE TO BE OF FINISH QUALITY.
3. PROVIDE FINISHED FILLER PANELS/STRIPS AT TOPS/BOTTOMS/SIDES AS REQUIRED TO COMPLETE EACH RUN OF UPPER AND LOWER CASEWORK.
4. PROVIDE BLOCKING (FIRE-TREATED WHERE REQUIRED) FOR ALL CASEWORK, MILLWORK, STANDING & RUNNING TRIM, FIXTURES, EQUIPMENT, SHELVING, BRACKETS, RESTROOM ACCESSORIES AND ALL OTHER INCIDENTAL ITEMS AS REQUIRED FOR THEIR INSTALLATION.
5. ALL TOE KICKS IN CASEWORK TO RECEIVE BASE SIMILAR TO BASE WITHIN ROOM.

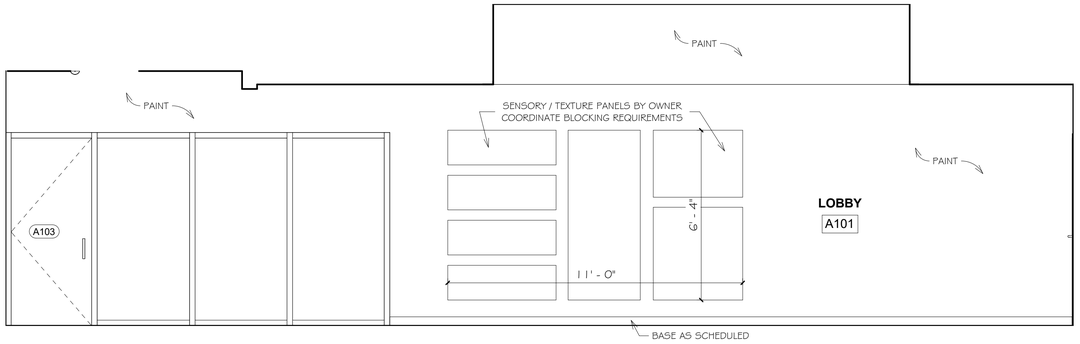

3 A-A7.4 **A101 LOBBY - SOUTH**

3/8" = 1'-0"

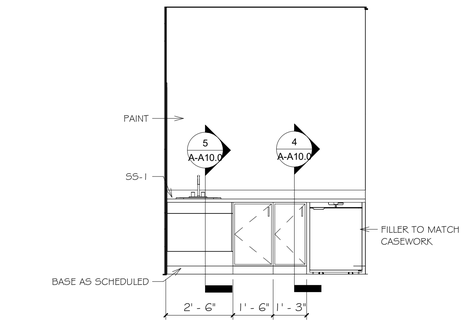

4 A-A7.4 **A212 WORK ROOM - EAST**

3/8" = 1'-0"

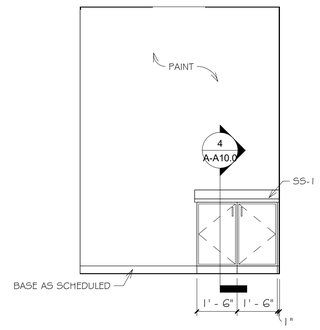

5 A-A7.4 **A212 WORK ROOM - WEST**

3/8" = 1'-0"

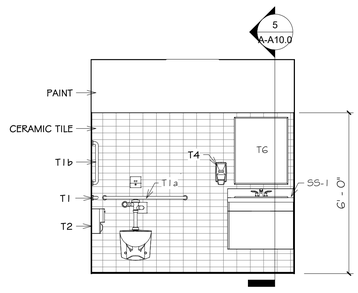

6 A-A7.4 **OFFICE TOILET NORTH**

3/8" = 1'-0" TYPICAL FOR A202 & A204

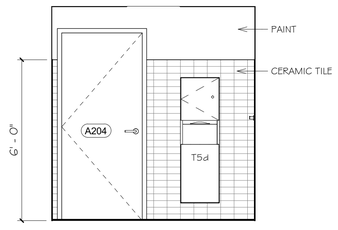

7 A-A7.4 **OFFICE TOILET SOUTH**

3/8" = 1'-0" TYPICAL FOR A202 & A204

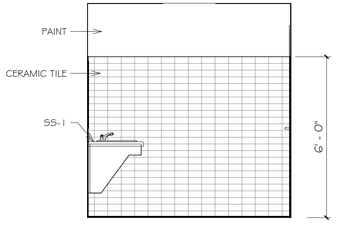

8 A-A7.4 **OFFICE TOILET EAST**

3/8" = 1'-0" TYPICAL FOR A202 & A204

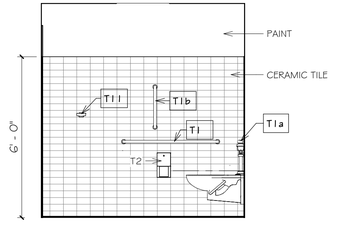

9 A-A7.4 **OFFICE TOILET WEST**

3/8" = 1'-0" TYPICAL FOR A202 & A204

ARCHITECTS

Saccoccio & Associates, Inc.

1085 Park Avenue
Cranston, Rhode Island
02910

tel 401.942.7970
fax 401.942.7975

Consultant

ROGER WILLIAMS PARK ZOO EDUCATION CENTER

ROGER WILLIAMS PARK ZOO

1000 ELMWOOD AVENUE,
PROVIDENCE, RI 02907

Revision Schedule	
Revision Number	Revision Date

ISSUED FOR BID
AUGUST 19, 2024

SHEET TITLE

INTERIOR ELEVATIONS

DRAWN BY:	FK, SOS	JOB NUMBER:	18050
CHECKED BY:	MS	DATE:	08-19-2024

A-A7.4

SHEET: OF:

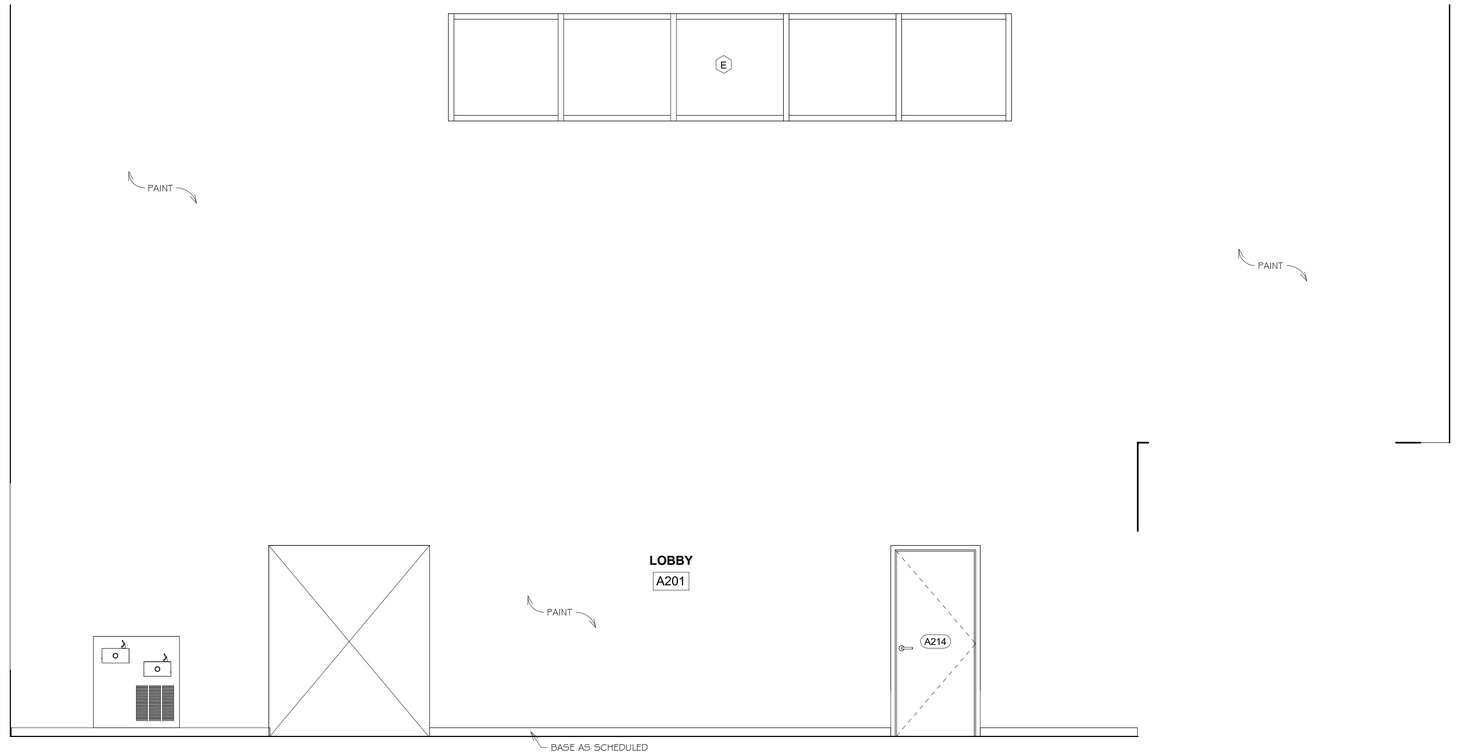

1 / A-A7.5 — A201 LOBBY - NORTH

3/8" = 1'-0"

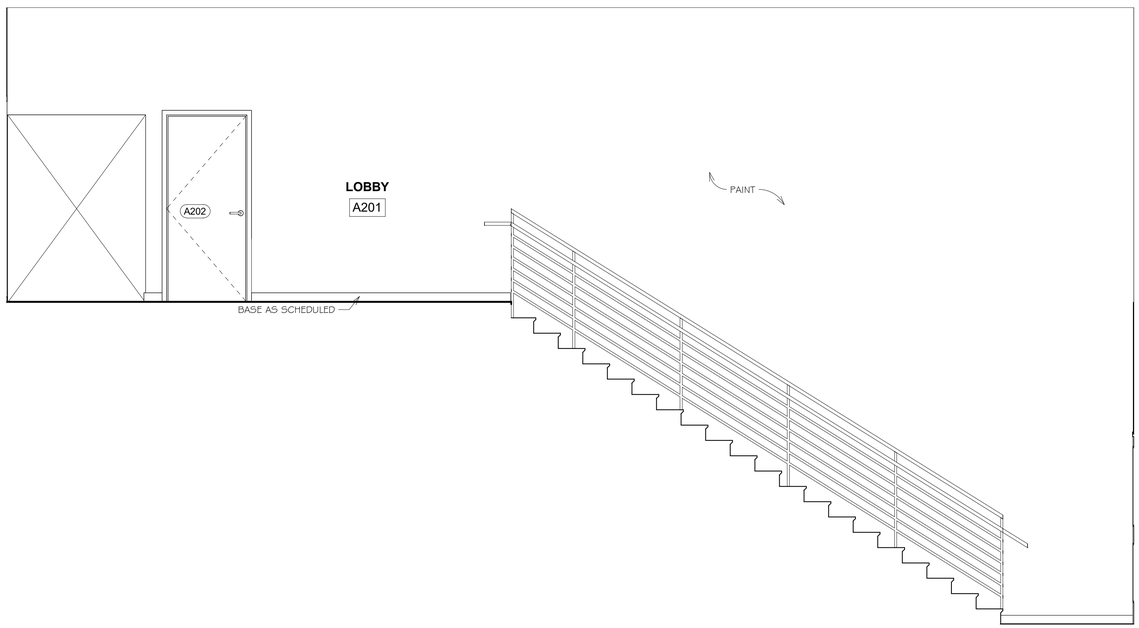

2 / A-A7.5 — A201 LOBBY - SOUTH

3/8" = 1'-0"

NOTES:

1. SEE SHEET G1.0 FOR MOUNTING HEIGHTS AND MORE INFORMATION.
2. ALL EXPOSED SIDE AND BOTTOM CASEWORK PANELS ARE TO BE OF FINISH QUALITY.
3. PROVIDE FINISHED FILLER PANELS/STRIPS AT TOPS/BOTTOMS/SIDES AS REQUIRED TO COMPLETE EACH RUN OF UPPER AND LOWER CASEWORK.
4. PROVIDE BLOCKING (FIRE-TREATED WHERE REQUIRED) FOR ALL CASEWORK, MILLWORK, STANDING & RUNNING TRIM, FIXTURES, EQUIPMENT, SHELVING, BRACKETS, RESTROOM ACCESSORIES AND ALL OTHER INCIDENTAL ITEMS AS REQUIRED FOR THEIR INSTALLATION.
5. ALL TOE KICKS IN CASEWORK TO RECEIVE BASE SIMILAR TO BASE WITHIN ROOM.

ARCHITECTS

Saccoccio & Associates, Inc.

1085 Park Avenue
Cranston, Rhode Island
02910

tel 401.942.7970
fax 401.942.7975

Consultant

ROGER WILLIAMS PARK ZOO EDUCATION CENTER

ROGER WILLIAMS PARK ZOO

1000 ELMWOOD AVENUE,
PROVIDENCE, RI 02907

Revision Schedule	
Revision Number	Revision Date

ISSUED FOR BID
AUGUST 19, 2024

SHEET TITLE

INTERIOR ELEVATIONS

DRAWN BY:	SOS	JOB NUMBER:	18050
CHECKED BY:	MS	DATE:	08-19-2024

A-A7.5

SHEET: OF:

NOTES:

1. SEE SHEET G1.0 FOR MOUNTING HEIGHTS AND MORE INFORMATION.
2. ALL EXPOSED SIDE AND BOTTOM CASEWORK PANELS ARE TO BE OF FINISH QUALITY.
3. PROVIDE FINISHED FILLER PANELS/STRIPS AT TOPS/BOTTOMS/SIDES AS REQUIRED TO COMPLETE EACH RUN OF UPPER AND LOWER CASEWORK.
4. PROVIDE BLOCKING (FIRE-TREATED WHERE REQUIRED) FOR ALL CASEWORK, MILLWORK, STANDING & RUNNING TRIM, FIXTURES, EQUIPMENT, SHELVING, BRACKETS, RESTROOM ACCESSORIES AND ALL OTHER INCIDENTAL ITEMS AS REQUIRED FOR THEIR INSTALLATION.
5. ALL TOE KICKS IN CASEWORK TO RECEIVE BASE SIMILAR TO BASE WITHIN ROOM.

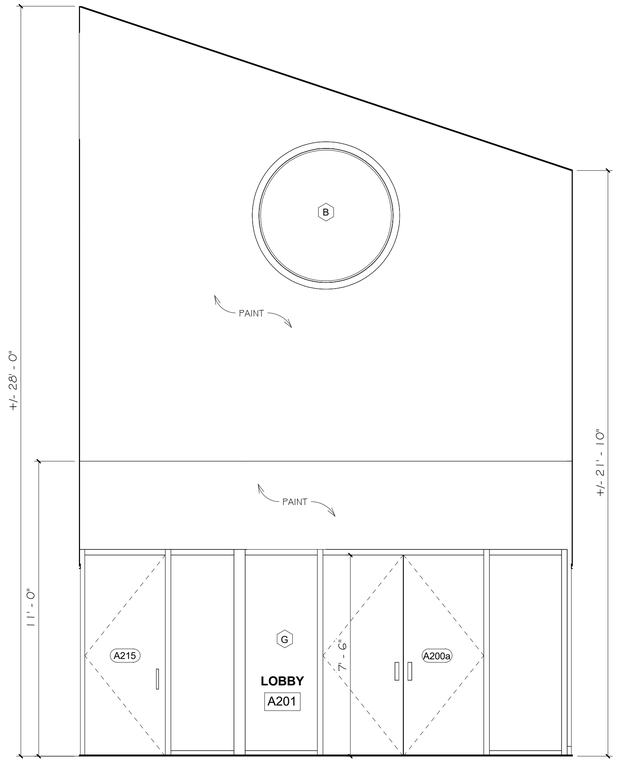

1 A-A7.6 A201 LOBBY - EAST

3/8" = 1'-0"

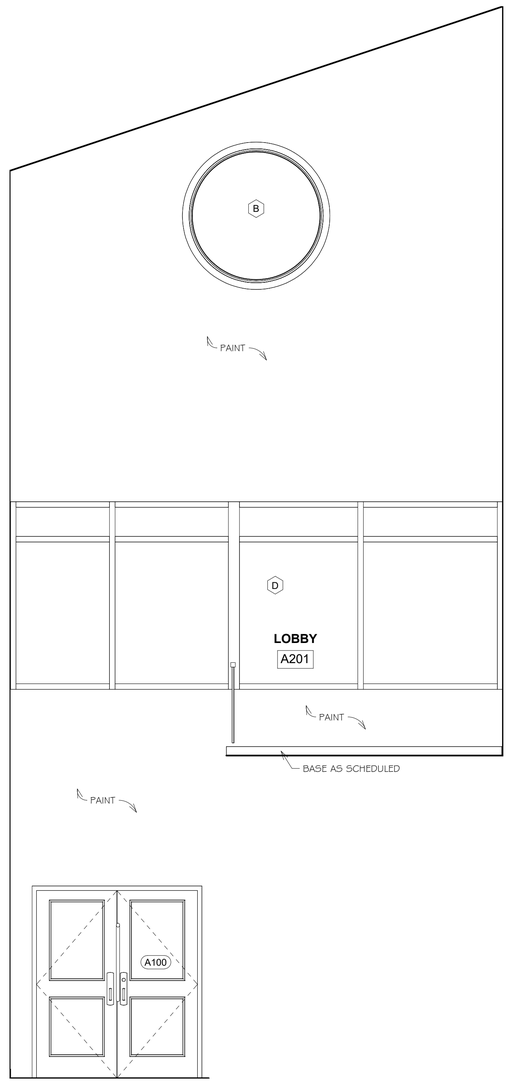

2 A-A7.6 A201 LOBBY - WEST

3/8" = 1'-0"

ARCHITECTS

Saccoccio & Associates, Inc.

1085 Park Avenue
Cranston, Rhode Island
02910

tel 401.942.7970
fax 401.942.7975

Consultant

ROGER WILLIAMS PARK ZOO EDUCATION CENTER

ROGER WILLIAMS PARK ZOO

1000 ELMWOOD AVENUE,
PROVIDENCE, RI 02907

Revision Schedule	
Revision Number	Revision Date

ISSUED FOR BID
AUGUST 19, 2024

SHEET TITLE

INTERIOR ELEVATIONS

DRAWN BY:	SOS	JOB NUMBER:	18050
CHECKED BY:	MS	DATE:	08-19-2024

A-A7.6

SHEET: OF:

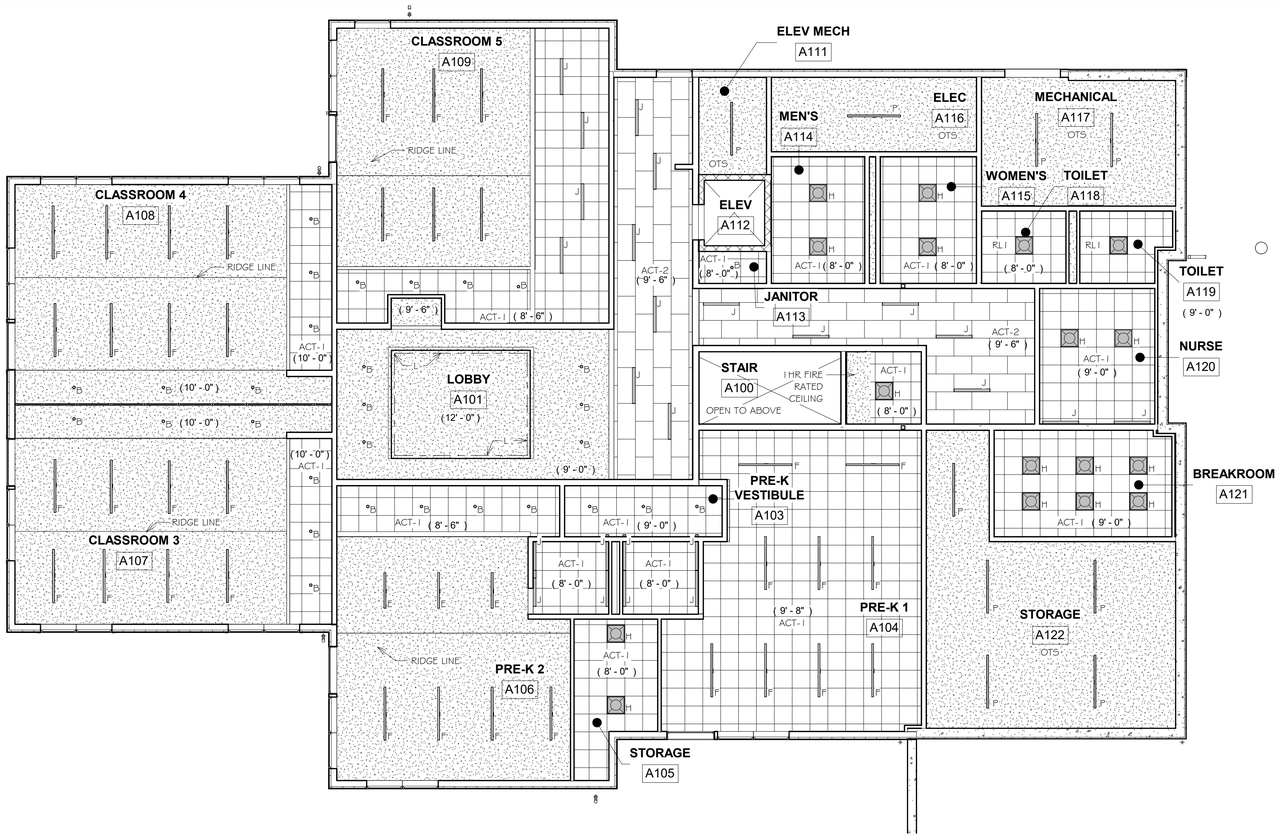

1 A-A8.0

E.C. LOWER CEILING PLAN

1/8" = 1'-0"

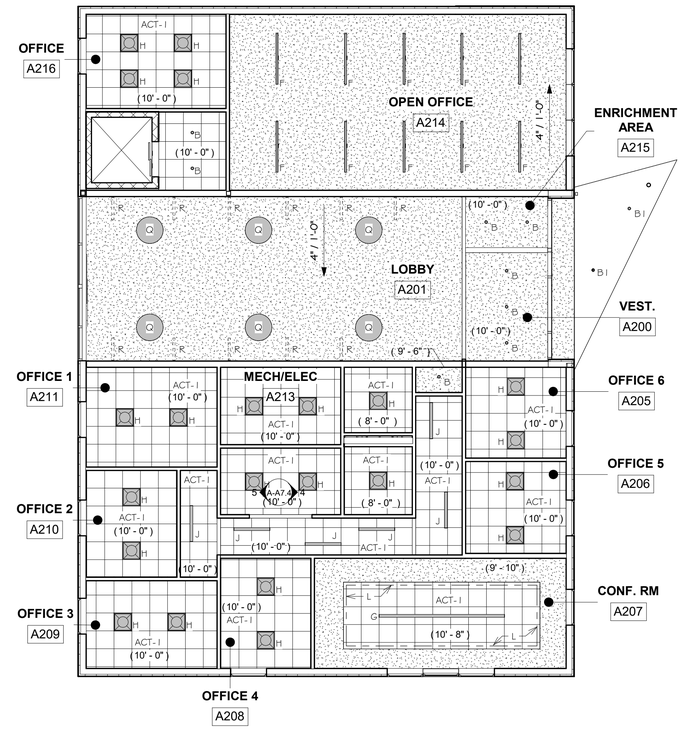

2 A-A8.0

E.C. UPPER CEILING PLAN

1/8" = 1'-0"

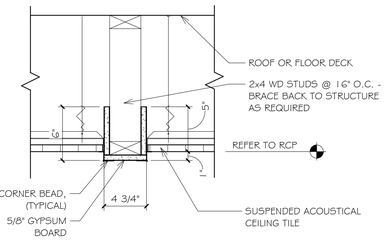

ACOUSTICAL CEILING TILE TO ACOUSTICAL CEILING TILE

3 A-A8.0

CEILING SOFFIT TRANSITION DETAIL

1 1/2" = 1'-0"

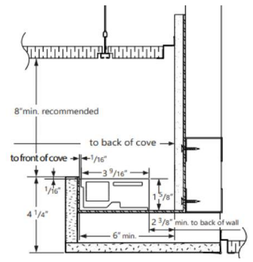

5 A-A8.0

COVE LIGHT DETAIL

3" = 1'-0"

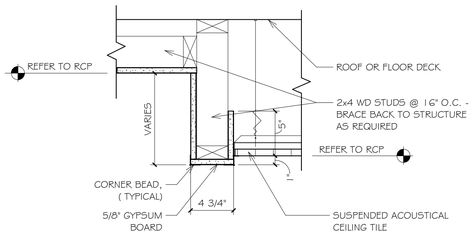

GYPSUM WALL BOARD TO ACOUSTICAL CEILING TILE

4 A-A8.0

CEILING SOFFIT TRANSITION DETAIL

1 1/2" = 1'-0"



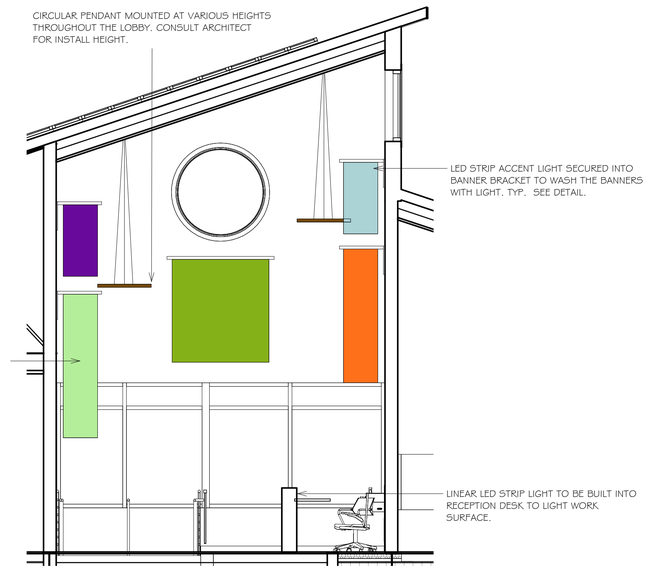

6 A-A8.0

LOBBY PENDANT LIGHTING AND BANNER

1/4" = 1'-0"

LEGEND

- 2'x2' ACOUSTICAL LAY-IN TILE
- NEW PAINTED 5/8" GWB. PROVIDE METAL CEILING OR SOFFIT CONSTRUCTION AS REQUIRED. PROVIDE FIRE-RATED ASSEMBLIES WHERE NOTED
- (X'-X") CEILING HEIGHT; OTS = OPEN TO STRUCTURE; BOS = BOTTOM OF STRUCTURE
- 2'x4' ACOUSTIC TILE, LAY IN GRID- TRUE RUNNING BOND PATTERN, WITH LINEAR RECESSED LED. DOWNLIGHT.
- TECTUM ACOUSTICAL TILES, LAY IN GRID
- TECTUM ACOUSTICAL PANELS, SURFACE MOUNTED OVER GWB
- ARMSTRONG INTEGRATED TECHZONE CEILING WITH RECESSED LINEAR OR PENDANT HUNG FIXTURES
- SLIM PROFILE PENDANT LIGHTING
- CIRCULAR PENDANT HUNG FIXTURE

NOTES

1. WOOD FLOOR ASSEMBLY TO BE ONE HOUR, #UL L508. SEE DETAIL 3/G2.1 FOR MORE INFORMATION

ARCHITECTS

Saccoccio & Associates, Inc.

1085 Park Avenue
Cranston, Rhode Island
02910

tel 401.942.7970
fax 401.942.7975

Consultant

ROGER WILLIAMS PARK ZOO EDUCATION CENTER

ROGER WILLIAMS PARK ZOO

1000 ELMWOOD AVENUE,
PROVIDENCE, RI 02907

Revision Schedule	
Revision Number	Revision Date

ISSUED FOR BID
AUGUST 19, 2024

SHEET TITLE

REFLECTED CEILING PLAN

DRAWN BY:	SOS	JOB NUMBER:	18050
CHECKED BY:	MS	DATE:	08-19-2024

A-A8.0

SHEET: OF:

ROOM FINISH SCHEDULE

ROOM #	ROOM NAME	WALLS				FLOOR	BASE		CEILING	COMMENTS
		NORTH	SOUTH	EAST	WEST		MAT.	HT		
A100	STAIR	PNT-2	PNT-2	PNT-2	PNT-2	RUB-1	B3	4"	GWB	
A101	LOBBY	PNT-1	PNT-1	PNT-1	PNT-1 /DPG-2	SC1 / SC5	B1	4"	GWB	SEE INTERIOR ELEVATIONS FOR DPG-2
A102	CORRIDOR	PNT-1	PNT-1	PNT-1	PNT-1	SC2	B1	4"	ACT-2	
A103	PRE-K VESTIBULE	PNT-1	PNT-1 / DPG-2	PNT-1	PNT-1	SC3	B1	4"	ACT-1	SEE INTERIOR ELEVATION FOR DPG-2
A104	PRE-K 1	PNT-1	PNT-1	PNT-1	PNT-1	LIN1 / LIN3	B1	4"	ACT-1	
A104a	TOILET	CT-1 / PNT-1	CT-1 / PNT-1	CT-1 / PNT-1	CT-1 / PNT-1	LIN1	B2		ACT-1	COVE BASE TO MATCH WALL TILE
A105	STORAGE	PNT-1	PNT-1	PNT-1	PNT-1	LIN1	B1	4"	ACT-1	
A106	PRE-K 2	PNT-1	PNT-1	PNT-1	PNT-1	LIN1, LIN3	B1	4"	ACT-1	
A106a	TOILET	CT-1 / PNT-1	CT-1 / PNT-1	CT-1 / PNT-1	CT-1 / PNT-1	LIN1	B2		ACT-1	COVE BASE TO MATCH WALL TILE
A107	CLASSROOM 3	PNT-1	PNT-1	PNT-1	PNT-1	LIN1 / LIN2	B1	4"	GWB / ACT-1	
A108	CLASSROOM 4	PNT-1	PNT-1	PNT-1	PNT-1	LIN1 / LIN2	B1	4"	GWB / ACT-1	
A109	CLASSROOM 5	PNT-1	PNT-1	PNT-1	PNT-1	LIN1 / LIN2	B1	4"	GWB / ACT-1	
A110	CORRIDOR	PNT-1	PNT-1	PNT-1	PNT-1	SC4	B1	4"	ACT-2	
A111	ELEV MECH	PNT-1	PNT-1	PNT-1	PNT-1	UNFINISHED CONCRETE	B1	4"	GWB	
A112	ELEV	-	-	-	-	-	-	4"		SEE ELEVATOR SPECIFICATION FOR FINISHES
A113	JANITOR	PNT-1	PNT-1	PNT-1	PNT-1	SC5	B1	4"	ACT1	
A114	MEN'S	CT-1 / PNT-1	CT-1 / PNT-1	CT-1 / PNT-1	CT-1 / PNT-1	SC3	B2	4"	ACT1	COVE BASE TO MATCH WALL TILE
A115	WOMEN'S	CT-1 / PNT-1	CT-1 / PNT-1	CT-1 / PNT-1	CT-1 / PNT-1	SC4	B2	4"	ACT1	COVE BASE TO MATCH WALL TILE
A116	ELEC					UNFINISHED CONCRETE			GWB	
A117	MECHANICAL					UNFINISHED CONCRETE			GWB	
A118	TOILET	CT-1 / PNT-1	CT-1 / PNT-1	CT-1 / PNT-1	CT-1 / PNT-1	SC3	B2		ACT-1	COVE BASE TO MATCH WALL TILE
A119	TOILET	CT-1 / PNT-1	CT-1 / PNT-1	CT-1 / PNT-1	CT-1 / PNT-1	SC3	B2		ACT-1	COVE BASE TO MATCH WALL TILE
A120	NURSE	PNT-1	PNT-1	PNT-1	PNT-1	SC3	B1	4"	ACT-1	
A121	BREAKROOM	PNT-1	PNT-1	PNT-1	PNT-1	LIN2	B1	4"	ACT-1	
A122	STORAGE	PNT-1	PNT-1	PNT-1	PNT-1	UNFINISHED CONCRETE	B1	4"	GWB	
A123	STOR.	PNT-1	PNT-1	PNT-1	PNT-1	SC5	B1	4"	GWB / ACT-1	
A200	VEST.	PNT-2	PNT-2	PNT-2	PNT-2	WM-1	B3	4"	GWB	
A201	LOBBY	PNT-2 / DPG-2	PNT-2	PNT-2	PNT-2	CT	B2	4"	GWB	FLOOR PATERN A / SEE ELEV FOR DPG-2
A202	TOILET	CT-1 / PNT-2	CT-1 / PNT2	CT-1 / PNT-2	CT-1 / PNT-2	CT	B2	4"	ACT-1	FLOOR PATERN B
A203	CORRIDOR	PNT-2	PNT-2	PNT-2	PNT-2	CT	B2	4"	ACT-1	FLOOR PATERN B
A204	TOILET	CT-1 / PNT-2	CT-1 / PNT2	CT-1 / PNT-2	CT-1 / PNT-2	CT	B2	4"	ACT-1	FLOOR PATERN B
A205	OFFICE 6	PNT-3	PNT-3	PNT-3	PNT-3	LIN4	B3	4"	ACT-1	
A206	OFFICE 5	PNT-3	PNT-3	PNT-3	PNT-3	LIN4	B3	4"	ACT-1	
A207	CONF. RM	PNT-3	PNT-3	PNT-3	PNT-3	LIN4	B3	4"	GWB / ACT1	
A208	OFFICE 4	PNT-3	PNT-3	PNT-3	PNT-3	LIN4	B3	4"	ACT-1	
A209	OFFICE 3	PNT-3	PNT-3	PNT-3	PNT-3	LIN4	B3	4"	ACT-1	
A210	OFFICE 2	PNT-3	PNT-3	PNT-3	PNT-3	LIN4	B3	4"	ACT-1	
A211	OFFICE 1	PNT-3	PNT-3	PNT-3	PNT-3	LIN4	B3	4"	ACT-1	
A212	WORK RM	PNT-3	PNT-3	PNT-3	PNT-3	LIN4	B3	4"	ACT-1	
A213	MECH/ELEC					LIN5	B3	4"	ACT-1	
A214	OPEN OFFICE	PNT-3	PNT-3	PNT-3	PNT-3	LIN4	B3	4"	GWB	
A215	ENRICHMENT AREA	DWP	-	-	-	CT	B2	4"	GWB	FLOOR PATERN A
A216	OFFICE	PNT-3	PNT-3	PNT-3	PNT-3	LIN4	B3	4"	ACT-1	

FINISH SCHEDULE NOTES

1. ANY ROOM(S) FOUND ON OTHER PLANS AND NOT INDICATED ON FINISH SCHEDULE SHALL RECEIVE MINIMALLY LIN, RB, ACT AND PT. NOTIFY ARCHITECT OF MISSING ROOM PRIOR TO COMMENCING ANY WORK IN THESE AREAS.

2. 5/8" GWB TO BE REPLACED w/ 5/8" CEMENTITIOUS TILE BACKER BOARD WHEREVER ANY PORTION OF A WALL OR CEILING IS SCHEDULED TO RECEIVE CT.

3. ALL INTERIOR ARCHITECTURAL WOODWORK SHALL RECEIVE FINISH TO MATCH DOOR FINISH WITHIN THE SAME ROOM UNLESS OTHERWISE SPECIFIED.

4. ALL CLASSROOMS AND DAYCARE TO HAVE WALL MOUNTED WHITE BOARD/MAGNETIC MARKER BOARD AND CORNER MOUNTED TV ON SWIVEL BRACKET.

FINISH SCHEDULE LEGEND

PNT	=	PAINT
CT	=	CERAMIC / PORCELIAN TILE
DPG	=	DECORATIVE GLASS PANEL
DWP	=	DURABLE WALL PANEL
RUB	=	RUBBER
SC	=	STAINED CONCRETE
LIN	=	RESILIENT FLOORING

Rodger Williams Zoo Education Center and Pavilion Lighting Schedule					
LIGHTING SCHEDULE					
CODE	**DESCRIPTION**	**MANUFACTURER**	**STYLE**	**COLOR**	**MODEL**
A	NOT USED				
B	Recessed accent light BeveLED Mini	USAI Lighting	B3RDF round , trimmed	White	B3RA 3" Round Adjustable
C	Pendant Hung Fixture - Pavilion	Alcon Lighting	Hobart	TBD	15203
D	Surface Mounted adjustable LED Flood Light	DesignPlan	Small, adjustable surface mounted Flood light	White	Krill 3.0
E	Pendant Hung Linear Fixture _ up, down lighting capabilities. 36 " length , Adjustable suspension system, square profile	Alcon Lighting	Beam 2 Square, compact 2.5" square form	White	CCHISL70090
F	Pendant Hung Linear Fixture _ up, down lighting capabilities. 48 " length , Adjustable suspension system, square profile	Axis Lighting	Beam 2 Square, compact 2.5" square form	White	CCHISL70090
G	Pendant Hung Linear Fixture _ up, down lighting capabilities, 14' , Adjustable suspension system	Axis Lighting	Beam 2 Square, compact 2.5" square form	White	
H/RL1	Recessed High performance LED Fixture, 24" x 24"	Axis Lighting	Aura	White	
H1	Recessed/Surface mounted LED Fixture 24" x 24"	Day-Brite	CFI Clear Appeal LED	White	2-cax-g-30L-830-2-D2s-UNV-LDE-WL
J	Recessed High performance LED fixture, 2" x 6'	Axis Lighting	BEAM		B2SQRLED
K	NOT USED				
L	Indirect Light Cove LED Luminarie_ High efficiency Fixture	Axis Lighting	Cove PERFEKT, Consult Manufacturer to determine the best fixture length combination to fill the cove opening.	White	QV-STND-ST
M/X1	Exterior flood light for illuminating large buildings, 7 variable light distributions	ERCO	Exterior Pole Mounted Luminaire	Weather Resistent Housing	Kona 94
N	NOT USED				
P	Surface Mounted LED Wrap Around Fixture	Metalux	48" Surface Mounted	White	F4WNLED-LD4-32SL-F-UNV-L835-CD1-U-ROV
Q	Pendant Hung Fixture--Large Formate Round Direct pendant LED	Eureka Lighitng	Area Ceiling Suspended	White	4815D-24
R	Pendant cable suspended track System	Lighting Services Inc.	ControlTrack System, CONTROLTrack seamless surface Track with cable pendant mounting system	White	
TCP1-4	Exterior Wall Mount Cylinder LED Light	Alcon Lighting		by Architect	11228-RGBW

ARCHITECTS

Saccoccio & Associates, Inc.

1085 Park Avenue
Cranston, Rhode Island
02910

tel 401.942.7970
fax 401.942.7975

Consultant

ROGER WILLIAMS PARK ZOO EDUCATION CENTER

ROGER WILLIAMS PARK ZOO

1000 ELMWOOD AVENUE,
PROVIDENCE, RI 02907

Revision Schedule	
Revision Number	Revision Date

ISSUED FOR BID
AUGUST 19, 2024

SHEET TITLE

FINISH & LIGHT FIXTURE SCHEDULE

DRAWN BY:	SOS	JOB NUMBER:	18050
CHECKED BY:	MS	DATE:	08-19-2024

A-A9.0

SHEET: OF:

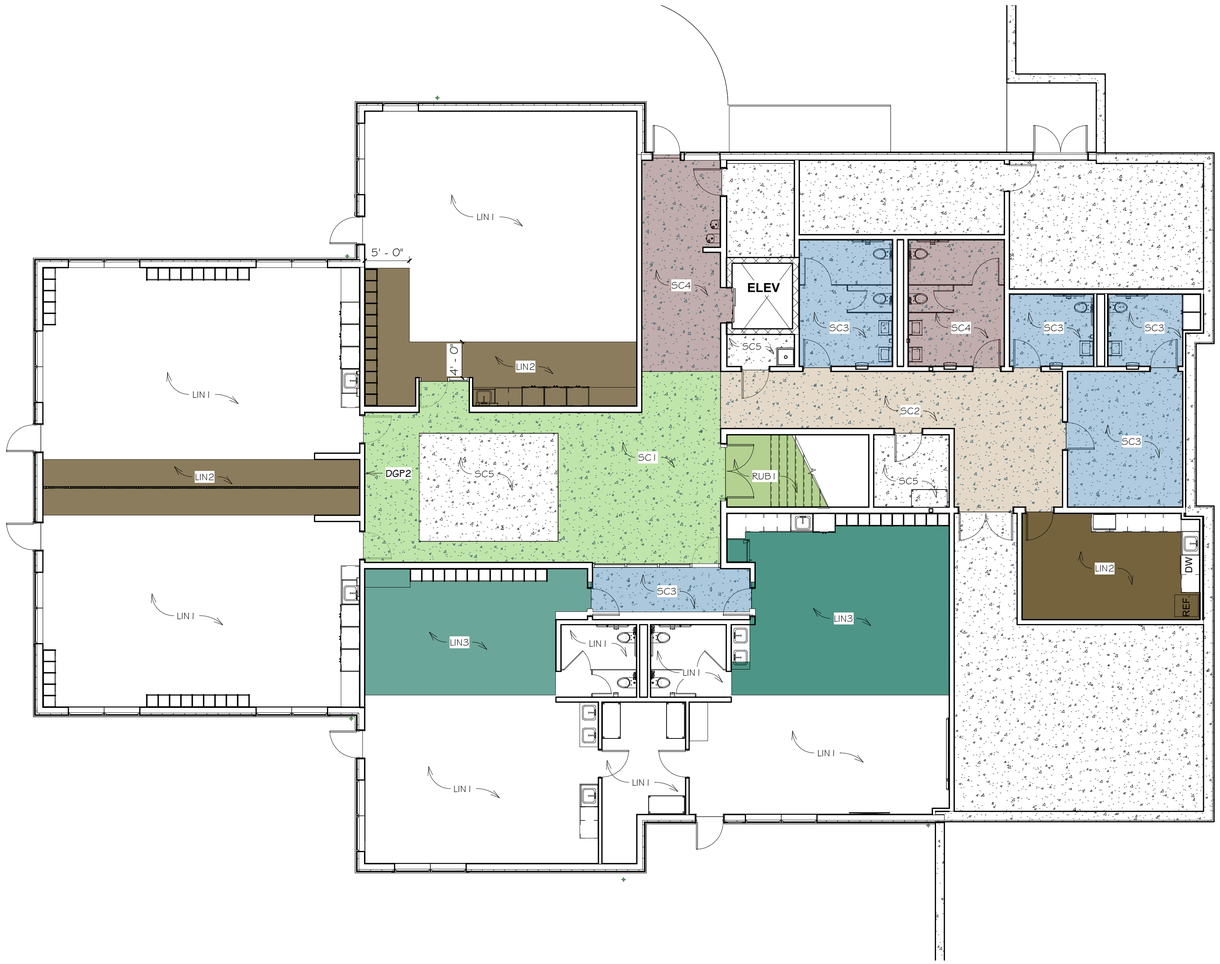

1 A-A9.1 LOWER LEVEL FINISH PLAN

1/8" = 1'-0"



2 A-A9.1 UPPER LEVEL FINISH PLAN

1/8" = 1'-0"

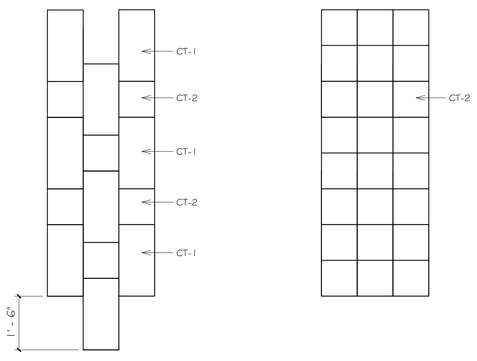

FLOOR PATTERN 'A'

FLOOR PATTERN 'B'

3 A-A9.1 FLOOR PATTERNS

1/2" = 1'-0"

ARCHITECTS

Saccoccio & Associates, Inc.

1085 Park Avenue
Cranston, Rhode Island
02910

tel 401.942.7970
fax 401.942.7975

Consultant

ROGER WILLIAMS PARK ZOO EDUCATION CENTER

ROGER WILLIAMS PARK ZOO

1000 ELMWOOD AVENUE,
PROVIDENCE, RI 02907

Revision Schedule	
Revision Number	Revision Date

ISSUED FOR BID
AUGUST 19, 2024

SHEET TITLE

FINISH PLANS

DRAWN BY:	SOS	JOB NUMBER:	18050
CHECKED BY:	MS	DATE:	08-19-2024

A-A9.1

SHEET: OF:



1 A-A9.2 FURNITURE PLAN

1/8" = 1'-0"

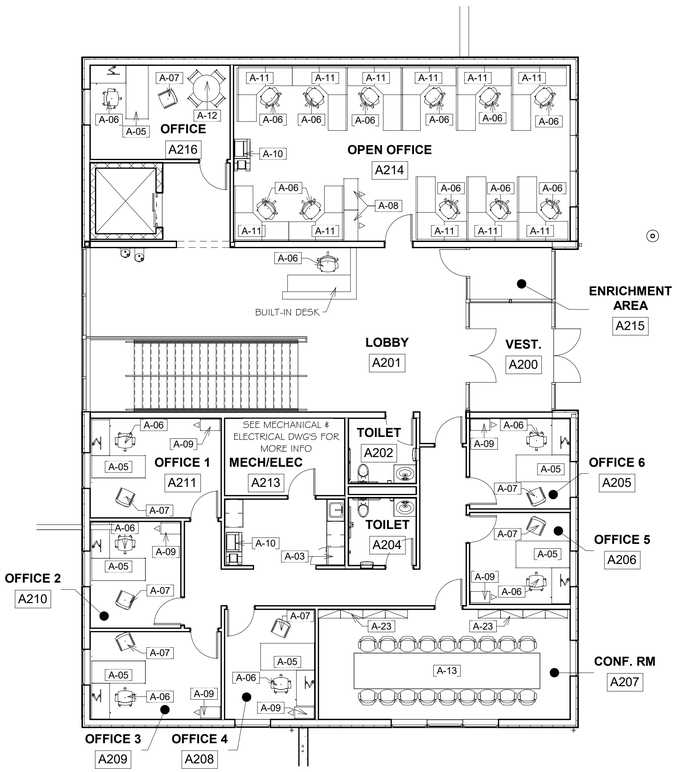

2 A-A9.2 FURNITURE PLAN

1/8" = 1'-0"

FURNITURE & EQUIPMENT SCHEDULE

KEYNOTE	DESCRIPTION	FURNISHED BY	INSTALLED BY	FUNDED BY	COMMENTS
A-01	MOP HANGER & SHELF	GC	GC	BASE BID	
A-02	24" x 48" WIRE SHELVES	GC	GC	BASE BID	
A-03	UNDERCOUNTER REFRIDERATOR	GC	GC	BASE BID	
A-04	REFRIDERATOR / FREEZER	GC	GC	BASE BID	
A-05	OFFICE DESK	GC	GC	ALLOWANCE	TO BE SELECTED BY OWNER
A-06	OFFICE CHAIR	GC	GC	ALLOWANCE	TO BE SELECTED BY OWNER
A-07	GUEST CHAIR	GC	GC	ALLOWANCE	TO BE SELECTED BY OWNER
A-08	LATERAL FILE CABINET	GC	GC	ALLOWANCE	TO BE SELECTED BY OWNER
A-09	FILE CABINET	GC	GC	ALLOWANCE	TO BE SELECTED BY OWNER
A-10	COPY MACHINE	OWNER	GC	BASE BID	
A-11	SYSTEM FURNITURE (WORK STATION)	GC	GC	ALLOWANCE	TO BE SELECTED BY OWNER
A-12	OFFICE TABLE & CHAIRS	GC	GC	ALLOWANCE	TO BE SELECTED BY OWNER
A-13	CONFERENCE ROOM TABLE & CHAIRS	GC	GC	ALLOWANCE	TO BE SELECTED BY OWNER
A-15	PRE-K TABLES & CHAIRS	GC	GC	ALLOWANCE	TO BE SELECTED BY OWNER
A-16	CLASSROOM TABLE & CHAIRS	GC	GC	ALLOWANCE	TO BE SELECTED BY OWNER
A-17	NURSE COT	GC	GC	ALLOWANCE	TO BE SELECTED BY OWNER
A-18	DISHWASHER	GC	GC	BASE BID	
A-19	TV & MOUNTING BRACKET	GC	GC	BASE BID	SEE ELECTRICAL DWG'S
A-20	WHITE BOARD	GC	GC	BASE BID	
A-21	PRE-K SEATING	GC	GC	ALLOWANCE	TO BE SELECTED BY OWNER
A-22	CARPET	GC	GC	ALLOWANCE	TO BE SELECTED BY OWNER
A-23	BUFFET / CABINET	GC	GC	ALLOWANCE	TO BE SELECTED BY OWNER
A-24	MICROWAVE	GC	GC	BASE BID	
A-25	BREAKROOM TABLE & CHAIRS	GC	GC	ALLOWANCE	TO BE SELECTED BY OWNER

ARCHITECTS

Saccoccio & Associates, Inc.

1085 Park Avenue
Cranston, Rhode Island
02910

tel 401.942.7970
fax 401.942.7975

Consultant

ROGER WILLIAMS PARK ZOO EDUCATION CENTER

ROGER WILLIAMS PARK ZOO

1000 ELMWOOD AVENUE,
PROVIDENCE, RI 02907

Revision Schedule	
Revision Number	Revision Date

ISSUED FOR BID
AUGUST 19, 2024

SHEET TITLE

FURNITURE PLANS

DRAWN BY:	SOS	JOB NUMBER:	18050
CHECKED BY:	MS	DATE:	08-19-2024

A-A9.2

SHEET: OF:

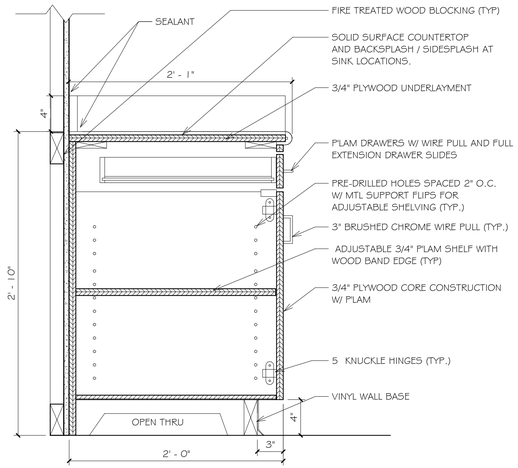

1 A-A10.0 WALL & BASE CABINET W/ DRAWER & CUPBOARD

1 1/2" = 1'-0"

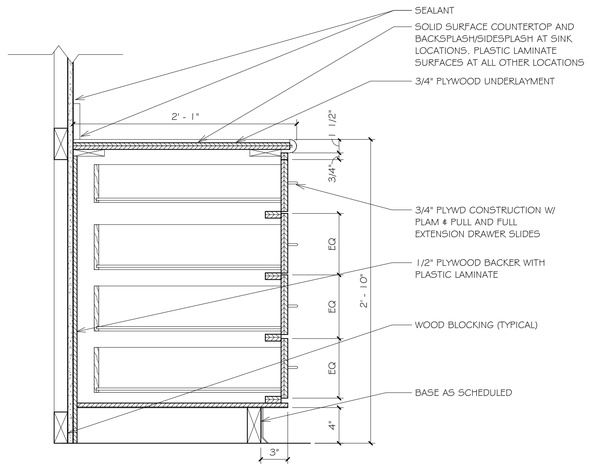

2 A-A10.0 FOUR DRAWER BASE CABINET

1 1/2" = 1'-0"

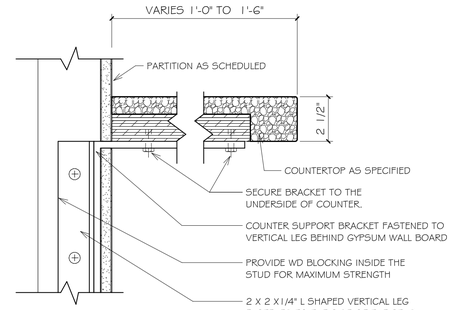

3 A-A10.0 COUNTER SUPPORT CONCEALED BRACKET DETAIL

3" = 1'-0"

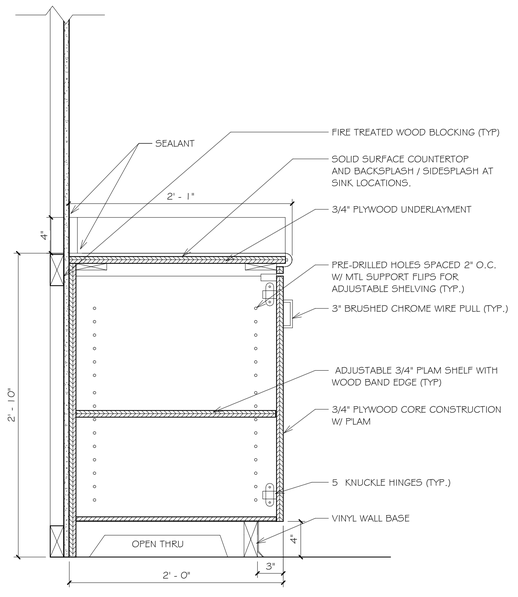

4 A-A10.0 WALL & BASE CABINET W/ CUPBOARD

1 1/2" = 1'-0"

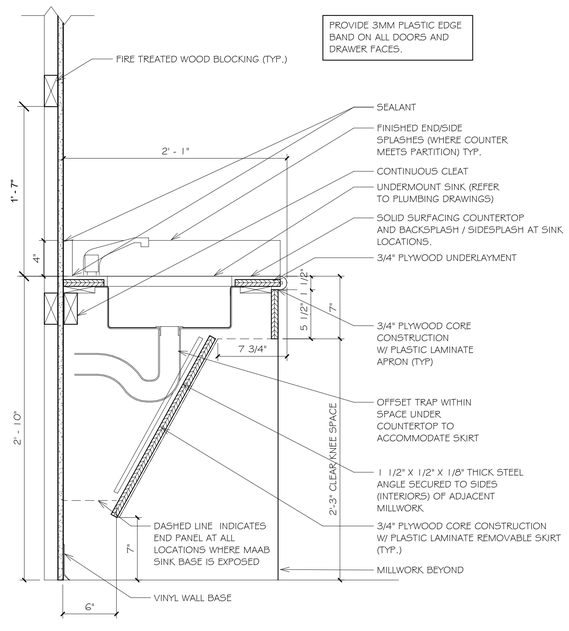

5 A-A10.0 WALL & BASE CABINETS - ADA/MAAB

1 1/2" = 1'-0"

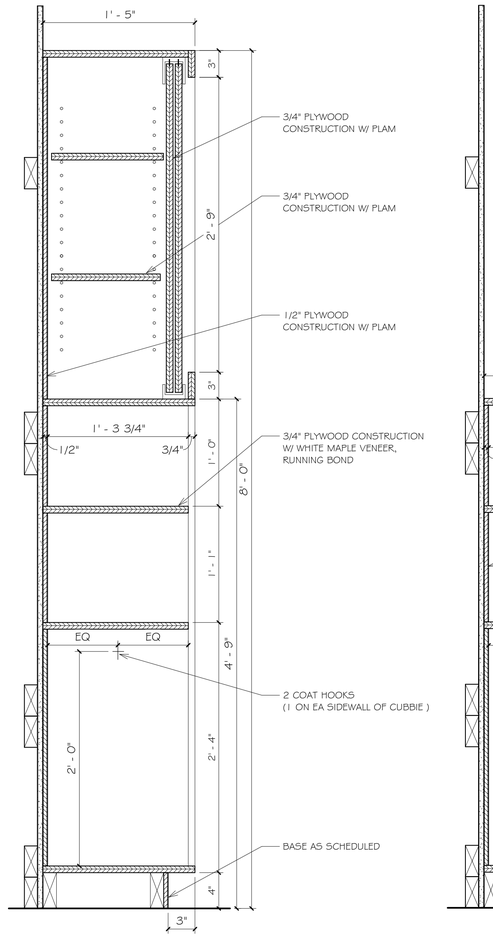

6 A-A10.0 CUBBIES & STORAGE DETAIL

1 1/2" = 1'-0"

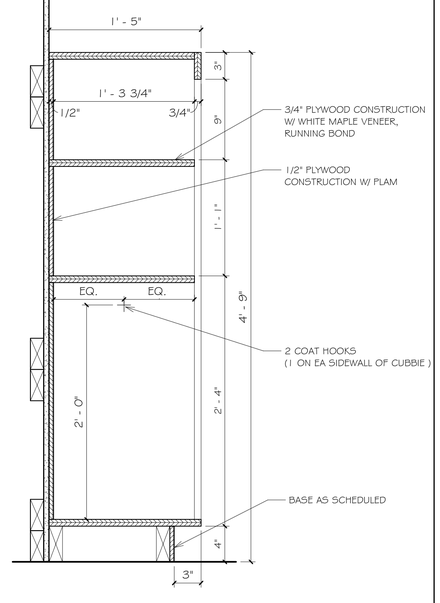

7 A-A10.0 CUBBIE DETAIL

1 1/2" = 1'-0"

ARCHITECTS

Saccoccio & Associates, Inc.

1085 Park Avenue
Cranston, Rhode Island
02910

tel 401.942.7970
fax 401.942.7975

Consultant

ROGER WILLIAMS PARK ZOO EDUCATION CENTER

ROGER WILLIAMS PARK ZOO

1000 ELMWOOD AVENUE,
PROVIDENCE, RI 02907

Revision Schedule	
Revision Number	Revision Date

ISSUED FOR BID
AUGUST 19, 2024

SHEET TITLE

MILLWORK & CASEWORK SECTIONS & DETAILS

DRAWN BY:	FK, KR	JOB NUMBER:	18050
CHECKED BY:	MS	DATE:	08-19-2024

A-A10.0

SHEET: OF:

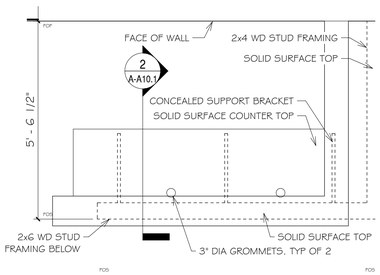

3 A-A10.1 **PLAN - RECEPTION DESK**

1/2" = 1'-0"

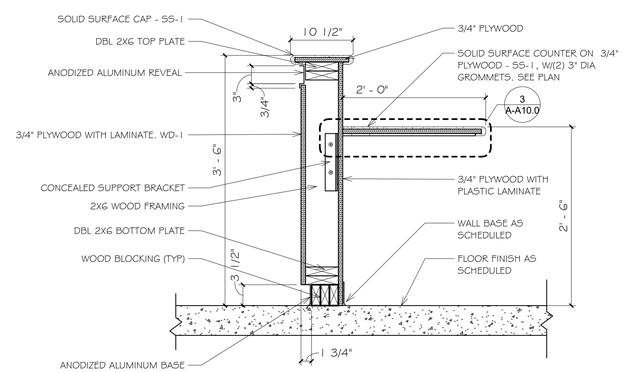

2 A-A10.1 **SECTION - RECEPTION DESK**

1" = 1'-0"

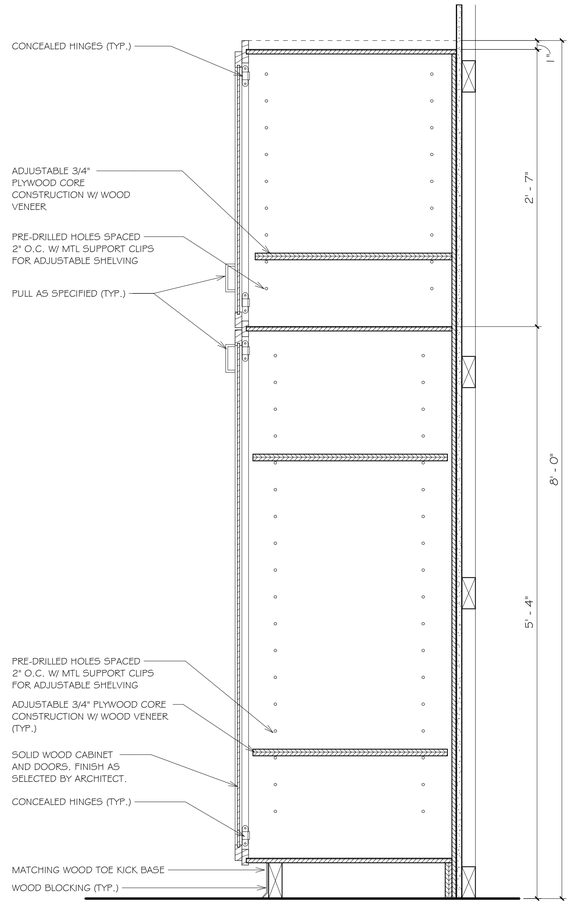

1 A-A10.1 **CABINET SECTION - TALL**

1 1/2" = 1'-0"

ARCHITECTS

Saccoccio & Associates, Inc.

1085 Park Avenue
Cranston, Rhode Island
02910

tel 401.942.7970
fax 401.942.7975

Consultant

ROGER WILLIAMS PARK ZOO EDUCATION CENTER

ROGER WILLIAMS PARK ZOO

1000 ELMWOOD AVENUE,
PROVIDENCE, RI 02907

Revision Schedule	
Revision Number	Revision Date

ISSUED FOR BID
AUGUST 19, 2024

SHEET TITLE

MILLWORK & CASEWORK SECTIONS & DETAILS

DRAWN BY:	KR	JOB NUMBER:	18050
CHECKED BY:	MS	DATE:	08-19-2024

A-A10.1

SHEET: OF:

GENERAL NOTES EDUCATION CENTER

CODE INFORMATION AND DESIGN LOADS (EXCEPT AS NOTED):

BUILDING CODE: THE RHODE ISLAND STATE BUILDING CODE SBC-1
(2018 INTERNATIONAL BUILDING CODE W/ RI AMENDMENTS), PROVIDENCE, RI:

FOUNDATION CRITERIA:
FROST DEPTH:.....3'-4"
SAFE SOIL BEARING CAPACITY: .....3000 PSF
SNOW CRITERIA:
GROUND SNOW LOAD (Pg): 30 PSF
FLAT ROOF SNOW LOAD (Pf): 30 PSF
SNOW LOAD IMPORTANCE FACTOR (Is): 1.10
SNOW EXPOSURE FACTOR (Ce): 1.0
THERMAL FACTOR (Ct): 1.0
ROOF DEAD LOAD: 22 PSF

SEISMIC FACTORS:
GROUND ACCELERATIONS: Ss=.199g, S1=.055g
DESIGN ACCELERATIONS: Sds=.319g, Sd1=.154g
SEISMIC IMPORTANCE FACTOR (Ie): 1.25
OCCUPANCY CATEGORY: III
SEISMIC DESIGN CATEGORY: C
SEISMIC SITE CLASS: E
ANALYSIS PROCEDURE: EQUIVALENT LATERAL FORCE PROCEDURE

LATERAL FORCE RESISTING SYSTEM:
LIGHT-FRAME (WOOD) WALLS SHEATHED WITH WOOD PANELS
RATED FOR SHEAR RESISTANCE

RESPONSE MODIFICATION FACTOR: 6.50
SEISMIC RESPONSE COEFF. Cs = 0.061

WIND CRITERIA:
ULTIMATE WIND SPEED (VULT): 134 mph
NOMINAL WIND SPEED (VASD): 104 mph
WIND EXPOSURE FACTOR: B
INTERNAL PRESSURE COEFF. GCPI: ±0.18
(ENCLOSED BLDG.)

COMPONENTS AND CLADDING PRESSURES (METHOD 1 - 104mph, GABLE ROOFS)					
LOCATION	10sf	20sf	50sf	100sf	500sf
ZONE 1	-27.57 PSF	-27.57 PSF	-23.68 PSF	-20.74 PSF	-16.08 PSF
ZONE 2e	-27.57 PSF	-27.57 PSF	-23.68 PSF	-20.74 PSF	-16.08 PSF
ZONE 2r	-43.98 PSF	-38.52 PSF	-31.30 PSF	-25.84 PSF	-22.65 PSF
ZONE 2n	-43.98 PSF	-38.52 PSF	-31.30 PSF	-25.84 PSF	-22.65 PSF
ZONE 3r	-51.32 PSF	-43.21 PSF	-32.49 PSF	-32.49 PSF	-32.49 PSF
ZONE 3e	-43.98 PSF	-38.52 PSF	-31.30 PSF	-25.84 PSF	-22.65 PSF
COMPONENTS AND CLADDING PRESSURES (METHOD 1-104mph, SOFFIT OVERHANGS/CANOPIES)					
LOCATION	10sf	20sf	50sf	100sf	500sf
ZONE 1	-35.77 PSF	-35.77 PSF	-34.66 PSF	-33.82 PSF	-32.49 PSF
ZONE 2e	-35.77 PSF	-35.77 PSF	-34.66 PSF	-33.82 PSF	-32.49 PSF
ZONE 2r	-52.18 PSF	-48.82 PSF	-44.38 PSF	-41.02 PSF	-39.06 PSF
ZONE 2n	-52.18 PSF	-48.82 PSF	-44.38 PSF	-41.02 PSF	-39.06 PSF
ZONE 3r	-62.03 PSF	-54.05 PSF	-43.50 PSF	-35.52 PSF	-30.85 PSF
ZONE 3e	-65.79 PSF	-54.99 PSF	-40.70 PSF	-40.70 PSF	-40.70 PSF

COMPONENTS AND CLADDING PRESSURES (METHOD 1 - 104mph, WALLS)					
LOCATION	10sf	20sf	50sf	100sf	500sf
ZONE 4	-21.01 PSF	-20.13 PSF	-18.98 PSF	-18.11 PSF	-16.08 PSF
ZONE 5	-25.93 PSF	-24.18 PSF	-21.88 PSF	-20.13 PSF	-16.08 PSF

COMPONENTS AND CLADDING PRESSURES (METHOD 1 - 104mph, MONOSLOPE ROOFS)					
LOCATION	10sf	20sf	50sf	100sf	500sf
ZONE 1	-24.29 PSF	-23.30 PSF	-21.99 PSF	-21.01 PSF	-21.01 PSF
ZONE 2	-29.21 PSF	-23.30 PSF	-21.99 PSF	-21.01 PSF	-21.01 PSF
ZONE 3	-50.54 PSF	-46.10 PSF	-40.22 PSF	-35.77 PSF	-35.77 PSF

Compoments and Cladding - Method 1
Enclosed Buildings Design Wind Pressures

Walls & Roofs

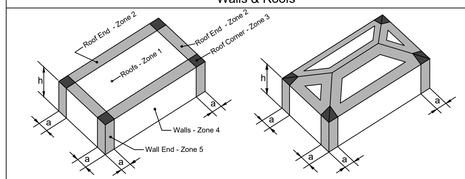

Flat Roof

Hip Roof (7°< Θ </= 27°)

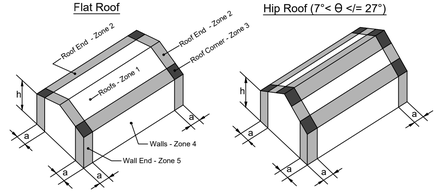

Gable Roof (Θ </= 7°)

Gable Roof (7°< Θ </= 45°)

NOTES:

1. PRESSURES SHOWN ARE APPLIED NORMAL TO THE SURFACE, PLUS AND MINUS SIGNS SIGNIFY PRESSURES ACTING TOWARD AND AWAY FROM THE SURFACES, RESPECTIVELY.

2. NOTATION:
a = 10 PERCENT OF LEAST HORIZONTAL DIMENSION OR 0.4h, WHICHEVER IS SMALLER, BUT NOT LESS THAN EITHER 4% OF LEAST HORIZONTAL DIMENSION OR 3FT (0.9M).
h = ROOF HEIGHT, IN FEET (METERS), EXCEPT THAT EAVE HEIGHT SHALL BE USED FOR ROOF ANGLES < 10°.
Θ = ANGLE OF PLANE OF ROOF FROM HORIZONTAL, IN DEGREES.

GENERAL NOTES

FOUNDATION NOTES:

1. ALL SOIL CONTAINING ORGANIC OR UNSUITABLE BEARING MATERIAL SHALL BE REMOVED FROM THE BUILDING FOOTPRINT.
2. ALL SOIL SUPPORTED FOOTINGS SHALL BE FOUNDED UPON COMPACTED NATURAL SUBGRADE OR COMPACTED BANK RUN GRAVEL FILL WITH A SAFE BEARING CAPACITY OF NOT LESS THAN 3000 PSF. COORDINATE SITE SPECIFIC SUBGRADE PREPARATION REQUIREMENTS WITH GEOTECHNICAL REPORT.
3. ROCK SHALL BE EXCAVATED A MINIMUM OF 6" BELOW BOTTOM OF FOOTING ELEVATION AND COVERED WITH A LAYER OF COMPACTED STRUCTURAL FILL.
4. A MODIFIED PROCTOR TEST SHALL BE PERFORMED BY A SOILS TESTING LAB ON EACH TYPE OF SOIL TO BE COMPACTED.
5. SOIL SHALL BE COMPACTED TO NOT LESS THAN 95% OF MAXIMUM DRY DENSITY PER ASTM D1557 IN LIFTS NOT TO EXCEED 6" LOOSE DEPTH.
6. FIELD DENSITY TESTS SHALL BE PERFORMED BY AN INDEPENDENT SOILS TESTING LAB TO VERIFY COMPACTION. A COPY OF ALL TEST REPORTS SHALL BE FILED WITH THE ARCHITECT.
7. BACKFILL SYMMETRICALLY AGAINST ALL FOUNDATION WALLS IN INCREMENTS NOT TO EXCEED 2 FEET MAXIMUM DIFFERENTIAL.
8. SEE PLUMBING AND ELECTRICAL DRAWINGS FOR UNDER FLOOR SYSTEMS AND SPECIAL GRANULAR FILL MATERIAL REQUIREMENTS.
9. NO FOOTINGS OR SLABS SHALL BE POURED INTO OR AGAINST SUBGRADE CONTAINING FREE WATER OR ICE.
10. ALL SLABS-ON-GRADE SHALL BE PLACED ON VAPOR BARRIER OVER A MIN. 9" COMPACTED STRUCTURAL FILL. REFER TO ARCHITECTURAL DWGS. FOR VAPOR BARRIER THICKNESS. COORDINATE ADDITIONAL SUBGRADE PREPARATION REQUIREMENTS WITH GEOTECHNICAL REPORT.

CONCRETE NOTES:

1. ALL CONCRETE SHALL HAVE A COMPRESSIVE STRENGTH OF NOT LESS THAN 4000 PSI AT 28 DAYS (U.N.O.)
2. ALL CONCRETE WALLS, FOOTINGS AND CONCRETE EXPOSED TO THE WEATHER SHALL CONTAIN AN APPROVED AIR ENTRAINING ADMIXTURE. AIR CONTENT SHALL BE 4 1/2% TO 7%.
3. ALL CONCRETE SHALL CONTAIN AN APPROVED WATER-REDUCING ADMIXTURE.
4. A SET OF FOUR (4) CONCRETE TEST CYLINDERS SHALL BE TAKEN BY AN INDEPENDENT CONCRETE TESTING LAB ON EACH DAY WHEN CONCRETE PLACEMENT EXCEEDS 5 CUBIC YARDS. ONE CYLINDER SHALL BE BROKEN AT 7 DAYS, ONE AT 28 DAYS, AND ONE AT 56 DAYS. A COPY OF ALL TEST REPORTS SHALL BE FILED WITH THE ARCHITECT. CYLINDERS ARE REQUIRED FOR EVERY 50 CUBIC YARDS POURED PER DAY.
5. NO CALCIUM CHLORIDE SHALL BE USED IN ANY CONCRETE.
6. A MIX DESIGN AND ACI 214 STRENGTH TEST EVALUATION SHALL BE SUBMITTED FOR APPROVAL FOR EACH TYPE OF CONCRETE.
7. REINFORCING BARS SHALL BE ASTM A615 GRADE 60 (U.N.O.).
8. THE CONTRACTOR SHALL SUBMIT SHOP DRAWINGS FOR APPROVAL PRIOR TO FABRICATION, SHOWING REINFORCING DETAILS, STEEL SIZES, SPACING AND PLACEMENT OF REINFORCING.
9. ALL REINFORCING BAR SPLICES SHALL CONFORM TO REQUIREMENTS OF ACI 318-14, BUT IN NO CASE SHALL THEY BE LESS THAN 2'-0".
10. DOWELS SHALL MATCH SIZE AND SPACING OF MAIN REINFORCING.
11. SHRINKAGE CONTROL JOINTS IN ALL WALLS SHALL BE NO FURTHER APART THAN 60 FEET IN ANY DIRECTION. CONSTRUCTION CONTROL JOINTS IN ALL WALLS SHALL BE NO FURTHER APART THAN 120 FEET IN ANY DIRECTION. SEE PLAN FOR LOCATION OF SLAB CONSTRUCTION AND/OR SHRINKAGE JOINTS.
12. WELDED WIRE FABRIC SHALL CONFORM TO ASTM A1064, Fy = 60 KSI.
13. ALL WELDED WIRE FABRIC SHALL BE LAPPED ONE (1) FULL MESH PANEL AT SIDES AND ENDS AND BE SECURELY WIRED TOGETHER.
14. SEE ARCHITECTURAL DRAWINGS FOR TYPE AND LOCATION OF ALL FLOOR FINISHES, FLOOR DEPRESSIONS AND CUT OUTS.
15. COORDINATE ALL FOUNDATION PENETRATIONS WITH ARCHITECT, PLUMBING, MECHANICAL, ELECTRICAL CONTRACTORS AND LOCAL AGENCIES.

MASONRY NOTES:

1. MASONRY WALLS ARE DESIGNED IN ACCORDANCE WITH NCMA "SPECIFICATIONS FOR THE CONSTRUCTION OF LOAD BEARING CONCRETE MASONRY," AND TMS BUILDING CODE FOR MASONRY STRUCTURES TMS 402-2016.
2. MASONRY SHALL BE HOLLOW CONCRETE UNITS CONFORMING TO ASTM C90, WITH AN AVERAGE NET AREA COMPRESSIVE STRENGTH OF 2000 PSI.
3. MORTAR SHALL CONFORM TO ASTM C270, TYPE S (LIME), AND BE PROPORTIONED TO YIELD A COMPRESSIVE STRENGTH OF 1800 PSI AT 28 DAYS BY THE PROPERTY METHOD. COMPRESSIVE STRENGTH RESULTS OF FIELD SAMPLED MORTAR IS TO BE USED TO EVALUATE MORTAR CONSISTENCY ONLY AND IS NOT A BASIS FOR REJECTING MORTAR QUALITY.
4. GROUT FOR REINFORCED MASONRY SHALL CONFORM TO ASTM C476, TYPE PL, AND HAVE A MINIMUM COMPRESSIVE STRENGTH OF 2000 PSI AT 28 DAYS WHEN FIELD TESTED IN ACCORDANCE WITH ASTM C1019.
5. MASONRY WALLS CONSTRUCTED SHALL YIELD A NET AREA COMPRESSIVE STRENGTH OF F'M = 2200 PSI.
6. ALL REINFORCING BARS SHALL BE ASTM A615 GRADE 60 (U.N.O.). PROVIDE TIES FOR ALL VERTICAL BARS, LOCATING BARS WITHIN A TOLERANCE OF ±1/2 INCH OF THE CENTERLINE.
7. THE CONTRACTOR SHALL SUBMIT SHOP DRAWINGS FOR APPROVAL PRIOR TO FABRICATION, SHOWING REINFORCING DETAILS, STEEL SIZES, SPACING AND PLACEMENT OF REINFORCING. LIFT HEIGHTS MUST BE CLEARLY LABELED ON SHOP DRAWING SECTIONS/ELEVATIONS, AND MUST BE REVIEWED AND APPROVED BY THE CONTRACTOR PRIOR TO SUBMITTAL FOR ENGINEERING REVIEW.
8. PRIOR TO GROUTING CELLS, BARS AND CELLS SHALL BE INSPECTED BY THE TESTING AGENCY/ENGINEER. A CLEANOUT HOLE IS REQUIRED AT BASE OF VERTICALLY REINFORCED CELLS DURING HIGH-LIFT GROUTING PROCEDURES. THE DESIGN OF REINFORCED MASONRY CONSTRUCTION IS BASED ON ALLOWABLE STRESSES PREDICATED WITH INSPECTION PROVISIONS REQUIRING QUALIFIED MASONRY INSPECTION TO TAKE PLACE ON A CONTINUOUS BASIS WHENEVER MASONRY IS BEING PLACED.
9. REINFORCED MASONRY WALLS SHALL HAVE BOND BEAMS AT EACH FLOOR AND TOP OF WALL AND ALSO SPACED AT APPROXIMATELY 8'-0". BOND BEAMS SHALL BE REINFORCED WITH (2) #5 HORIZONTAL BARS. BOND BEAM REINFORCING SHALL BE EXTENDED INTO AND BE CONTINUOUS WITH ALL INTERSECTING BOND BEAMS. MASONRY OPENINGS GREATER THAN 16" WIDE REQUIRE APPROVED LINTELS OR AS INDICATED ON THE DRAWINGS. ADDITIONAL HORIZONTAL JOINT REINFORCING SHALL BE 9 GAGE GALVANIZED LADDER TYPE AT 16" O.C.
10. MASONRY BLOCK CELLS CONTAINING VERTICAL REINFORCING, MASONRY LINTEL BLOCKS, AND MASONRY BOND BEAMS CONTAINING HORIZONTAL REINFORCING SHALL BE GROUTED SOLID. FILLING CELLS WITH MORTAR IS UNACCEPTABLE.
11. PROVIDE #5 VERTICAL REINFORCING BARS IN (2) CELLS ADJACENT TO WINDOWS AND DOOR OPENINGS AND AT ALL CORNERS AND DISCONTINUOUS EDGES, UNLESS NOTED OTHERWISE.
12. UNLESS NOTED OTHERWISE, ALL MASONRY WALLS SHALL BE REINFORCED VERTICALLY WITH MINIMUM #5 VERTICAL BARS AT 32" O.C.
13. PLACEMENT OF PIPE OR CONDUIT WITHIN REINFORCED CELLS IS PROHIBITED.
14. STARTER COURSES OF ALL CMU WALLS SHALL BE GROUTED SOLID.
15. STANDARD LOW LIFT AND HIGH LIFT GROUTING PROCEDURES AS OUTLINED IN TMS 402-2016 SHALL BE STRICTLY ADHERED TO.
16. WHERE THE FOLLOWING CONDITIONS ARE MET, PLACE GROUT IN LIFTS NOT EXCEEDING 12 FT 8 IN.
    a.) THE MASONRY HAS CURED FOR AT LEAST 4 HOURS.
    b.) THE GROUT SLUMP IS MAINTAINED BETWEEN 10 INCHES TO 11 INCHES
    c.) NO INTERMEDIATE REINFORCED BOND BEAMS ARE PLACED BETWEEN THE TOP AND BOTTOM OF THE POUR HEIGHT.
17. WHEN THE CONDITIONS OF 16a AND 16b ARE MET BUT THERE ARE INTERMEDIATE BOND BEAMS WITHIN THE GROUT POUR, LIMIT THE GROUT LIFT HEIGHT TO THE BOTTOM OF THE LOWEST BOND BEAM THAT IS MORE THAN 5FT 4 INCHES ABOVE THE BOTTOM OF THE LIFT, BUT DO NOT EXCEED A GROUT LIFT OF 12 FT 8 INCHES
18. WHEN THE CONDITIONS OF 16a OR 16b ARE NOT MET, PLACE GROUT IN LIFTS NOT EXCEEDING 5 FEET 4 INCHES.

MASONRY NOTES (CONT.):

19. CONSOLIDATE GROUT POURS EXCEEDING 12 INCHES IN HEIGHT BY MECHANICAL VIBRATION, AND RECONSOLIDATE BY MECHANICAL VIBRATION AFTER INITIAL WATER LOSS AND SETTLEMENT HAS OCCURRED.
20. PROVIDE CLEANOUTS IN THE BOTTOM COURSE OF MASONRY FOR EACH GROUT POUR WHEN THE GROUT POUR HEIGHT EXCEEDS 5 FEET 4 INCHES. CONSTRUCT CLEANOUTS SO THAT THE SPACE TO BE GROUTED CAN BE CLEANED AND INSPECTED. CONSTRUCT CLEANOUTS WITH AN OPENING OF SUFFICIENT SIZE TO PERMIT REMOVAL OF DEBRIS. THE MINIMUM OPENING SHALL BE 3 INCHES. AFTER CLEANING, CLOSE CLEANOUTS WITH CLOSURES BRACED TO RESIST GROUT PRESSURE.
21. WHEN GROUTING, FORM GROUT KEYS BETWEEN GROUT LIFTS WHEN THE FIRST LIFT IS PERMITTED TO SET PRIOR TO PLACEMENT OF THE SUBSEQUENT LIFT.
    a.) FORM THE GROUT KEY BY TERMINATING THE GROUT A MINIMUM OF 1 1/2 INCH BELOW A MORTAR JOINT.
    b.) DO NOT FORM GROUT KEYS WITHIN BOND BEAMS.
    c.) AT BOND BEAMS OR LINTELS LAID WITH CLOSED BOTTOM UNITS, TERMINATE THE GROUT POUR AT THE BOTTOM OF THE BOND BEAM OR LINTEL WITHOUT FORMING A KEY.
22. THE MASONRY CONTRACTOR SHALL CLEAN EXPOSED MASONRY SURFACES OF ALL STAINS, EFFLORESCENCE, MORTAR OR GROUT DROPPINGS, AND DEBRIS.
23. COVER TOP OF UNFINISHED MASONRY WORK TO PROTECT IT FROM THE WEATHER.
24. COLD WEATHER CONSTRUCTION PRACTICES SHALL BE FOLLOWED WHEN AMBIENT AIR TEMPERATURE FALLS BELOW 40 DEGREES F. OR THE TEMPERATURE OF MASONRY UNITS IS BELOW 40 DEGREES F. COLD WEATHER PRACTICE SHALL BE IN CONFORMANCE WITH THE SPECIFICATION FOR MASONRY STRUCTURES TMS 602-2016.
25. HOT WEATHER CONSTRUCTION PRACTICES SHALL BE FOLLOWED WHEN AMBIENT AIR TEMPERATURE EXCEEDS 100 DEGREES F. OR 90 DEGREES F. WITH A WIND VELOCITY GREATER THAN 8 MPH. HOT WEATHER PRACTICE SHALL BE IN CONFORMANCE WITH THE SPECIFICATION FOR MASONRY STRUCTURES TMS 602-2016.

PRE-ENGINEERED WOOD ROOF TRUSSES:

1. SEE ARCHITECTURAL AND STRUCTURAL DRAWINGS FOR WOOD FRAMING DETAILS.
2. ALL FASTENING SHALL COMPLY WITH TABLE 2304.10.1 FASTENING SCHEDULE OF THE RHODE ISLAND STATE BUILDING CODE.
3. ALL ROOF TRUSSES AND OVERHANGING WOOD MEMBERS SHALL BE HELD DOWN WITH HURRICANE ANCHORS. REFER TO DRAWINGS FOR TYPE AND LOCATIONS.
4. WOOD TRUSSES SHALL BE DESIGNED PER THE "DESIGN SPECIFICATION FOR METAL PLATE CONNECTED WOOD TRUSSES", PUBLISHED BY THE TRUSS PLATE INSTITUTE.
5. WOOD TRUSS FABRICATOR SHALL SUBMIT TO THE ARCHITECT FOR APPROVAL PRIOR TO FABRICATION, SHOP DRAWINGS BEARING SEAL AND SIGNATURE OF THE DESIGN PROFESSIONAL ENGINEER, REGISTERED IN THE STATE OF RHODE ISLAND. SHOP DRAWINGS SHALL INCLUDE BUT ARE NOT LIMITED TO: TRUSS LAYOUT PLAN; TRUSS DETAILS SHEETS SHOWING CONFIGURATION, DIMENSIONS, LOADS, MEMBER SIZES AND GRADES, MEMBER FORCES, CONNECTION PLATE SIZES, AND PERMANENT BRACING REQUIRED; TRUSS CONNECTION HANGERS FOR FLUSH FRAMING.
6. WOOD TRUSS ERECTOR SHALL BE RESPONSIBLE FOR DESIGN AND INSTALLATION OF ALL TEMPORARY ERECTION BRACING AND PERMANENT BRACING.
7. SEE GENERAL NOTES – DESIGN LOADS FOR TRUSS DESIGN LOADS REQUIREMENTS. SEE ROOF DIAGRAM FOR ADDITIONAL LOADS ON ROOF CAUSED BY SNOW.

WOOD SHEATHING AND SUBFLOOR FOR WOOD FRAMING NOTES:

1. ROOF SHEATHING SHALL BE MINIMUM 3/4" APA RATED SHEATHING, EXTERIOR GRADE. SHEATHING SHALL BE FASTENED WITH 10d NAILS AT NOT MORE THAN 6" O.C. ON ALL SUPPORTED PANEL EDGES. "H" CLIPS SHALL BE USED AT ALL UNSUPPORTED PANEL EDGES WHEN FRAMING IS SPACED GREATER THAN 16" ON CENTER. NAIL INTERMEDIATE MEMBERS AT 12" O.C.
2. EXTERIOR WALL SHEATHING SHALL BE 2 1/2" THICK HUBER ZIPWALL SYSTEM, R-12. SHEATHING SHALL BE FASTENED WITH 10d NAILS AT NOT MORE THAN 6" O.C. ON ALL PANEL EDGES. ALL HORIZONTAL PANEL EDGES MUST BE BLOCKED AND NAILED.
3. SUB-FLOORING SHALL BE 3/4" TONGUE & GROOVE APA RATED SHEATHING, EXPOSURE 1, 48/24 SPAN RATING, UNLESS NOTED OTHERWISE. FLOOR SHEATHING SHALL BE GLUED AND NAILED TO FRAMING WITH 8d NAILS @ 6" O.C. AT EDGES OF PANELS. NAIL AT 12" O.C. IN FIELD.

STRUCTURAL LUMBER, ENGINEERED LUMBER:

1. ALL MATERIAL AND WORKMANSHIP SHALL BE IN ACCORDANCE WITH THE LATEST EDITION OF "TIMBER CONSTRUCTION STANDARDS" OF THE AMERICAN INSTITUTE OF TIMBER CONSTRUCTION AND THE "NATIONAL DESIGN SPECIFICATION FOR STRESS-GRADE LUMBER AND ITS FASTENINGS" OF THE NATIONAL FOREST PRODUCTS ASSOCIATION.
2. THE MINIMUM GRADES AND DESIGN VALUES REQUIRED FOR STRUCTURAL LUMBER SHALL BE:
   STUDS: SPRUCE-PINE-FIR CONSTRUCTION GRADE Fc=1400 PSI, E=1,300,000 PSI
   JOISTS, RAFTERS, & HEADERS: SPRUCE-PINE-FIR NO. 1/2 Fb=875 PSI E=1,400,000 PSI
3. ALL EXTERIOR WALL STUDS SHALL BE 2x8 @ 16" O.C. ALL INTERIOR BEARING WALL STUDS SHALL BE 2x6 @ 16" O.C., UNLESS NOTED OTHERWISE ON PLANS.
4. ALL MULTIPLE MEMBER BEAMS AND HEADERS SHALL BE SUPPORTED ON NOT LESS THAN AN EQUAL NUMBER OF STUDS AT EACH END, UNLESS NOTED OTHERWISE. ALL HEADERS IN 2x8 EXTERIOR STUD WALLS SHALL BE MIN. OF (4) 2x8 UNLESS NOTED OTHERWISE.
5. WOOD COLUMNS MADE WITH THREE OR MORE WOOD STUDS SHALL BE NAILED TOGETHER WITH 16D NAILS. NAIL SPACING SHALL BE IN (2) ROWS, SPACED 8" O.C. FROM BOTH SIDES STAGGERED 4" APART.

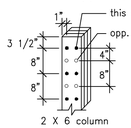

2 X 6 column

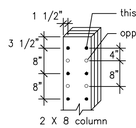

2 X 8 column

6. ALL MULTIPLE 2x STUDS OR POSTS THAT ARE SUPPORTING ENDS OF HEADERS OR BEAMS MUST EXTEND DOWN TO TOP FOUNDATION WALL, FOOTING, OR INTERIOR WOOD BEAM. PROVIDE SOLID BLOCKING WITHIN FLOOR FRAMING BETWEEN POSTS FROM ABOVE AND POSTS BELOW AS REQUIRED. BLOCK ALL POSTS BEARING AT 1ST FLOOR LEVEL SOLID TO TOP OF FOUNDATION WALL OR BEAM WITHIN FLOOR FRAMING.
7. ALL EXTERIOR OPENINGS SHALL HAVE NOT LESS THAN (2) JACK STUDS AND TWO FULL HEIGHT STUDS AT EACH SIDE OF THE OPENING. ALL INTERIOR BEARING WALL OPENINGS SHALL HAVE NOT LESS THAN (2) JACK STUDS AND (1) FULL HEIGHT STUD AT EACH SIDE OF THE OPENING UNLESS NOTED OTHERWISE.
8. ALL ROOF RAFTERS SHALL HAVE A SIMPSON HURRICANE CLIP FOR CONNECTIONS AT EACH BEARING LOCATION, REFER TO DRAWING FOR TYPE AND LOCATION.
9. FLUSH FRAMING SHALL BE SUPPORTED BY JOIST HANGERS DESIGNED FOR THE FULL CAPACITY OF THE SUPPORTED MEMBER, REFER TO DRAWING FOR TYPE AND LOCATION.
10. DOUBLE FLOOR JOISTS UNDER ALL PARTITIONS RUNNING PARALLEL TO SPAN.
11. ALL WOOD IN CONTACT WITH CONCRETE OR MASONRY SHALL BE PRESSURE TREATED WITH PRESERVATIVE.
12. ENGINEERED LUMBER SUPPLIER SHALL SUBMIT TO THE ENGINEER OF RECORD FOR APPROVAL, SHOP DRAWINGS FOR ALL TJI'S, MICROLLAMS, AND PARALLAMS. SHOP DRAWINGS SHALL INCLUDE BUT ARE NOT LIMITED TO: FRAMING LAYOUT PLAN, MEMBER SIZES, NAILING PATTERNS FOR MULTIPLE MEMBERS, BEARING LENGTHS, CONNECTION HANGERS, BLOCKING, BRIDGING, AND SQUASH BLOCKS.
    a) ALL LVL PENETRATIONS SHALL BE MADE IN THE FACTORY. REFER TO TYPICAL ALLOWABLE BEAM PENETRATION DETAIL.
    b) CONTRACTOR AND TRUSS FABRICATOR SHALL COORDINATE ALL DUCTWORK AND PIPE PENETRATIONS THROUGH LVL JOISTS AND BEAMS. CONTRACTOR SHALL REVIEW AND APPROVE FINAL LVL SHOP DRAWINGS PRIOR TO SUBMITTING TO THE ARCHITECT/ENGINEER FOR REVIEW.
13. SEE SHEETS A-S4.0, AND A-S4.1 FOR SHEAR WALL INFORMATION.
14. TJI'S, LVL (MICROLLAM) AND PSL (PARALLAM) SHALL BE ILEVEL BY WEYERHAEUSER, OR APPROVED EQUAL.

STRUCTURAL LUMBER, ENGINEERED LUMBER (CONT.):

15. LVL (MICROLLAM) SHALL HAVE THE FOLLOWING MINIMUM PROPERTIES: FB = 2600 PSI, FT = 1895 PSI, FC (PERP.) = 750 PSI, FC (PARR.) = 2510 PSI, FV = 285 PSI, E = 2,000,000 PSI
16. LVL'S SHALL BE FREE OF FINGER JOINTS, SCARF JOINTS OR MECHANICAL CONNECTIONS FOR THE FULL LENGTH OF THE MEMBER.
17. PSL (PARALLAM) BEAMS SHALL HAVE THE FOLLOWING MINIMUM PROPERTIES: FB = 2900 PSI, FT = 2300 PSI, FC (PERP.) = 625 PSI, FC (PARR.) = 2900 PSI, FV = 290 PSI, E = 2,000,000 PSI
18. PSL (PARALLAM) POSTS SHALL HAVE THE FOLLOWING MINIMUM PROPERTIES: FB = 2400 PSI, FT = 1995 PSI, FC (PERP.) = 545 PSI, FC (PARR.) = 2500 PSI, FV = 190 PSI, E = 1,800,000 PSI
19. ADHESIVE USED SHALL BE WATERPROOF, MEETING THE REQUIREMENTS OF ASTM D-2559-12a (2018).
20. ALL SIMPSON CONNECTORS (HANGERS, STRAPS, UPLIFT CONNECTORS, POST CAPS, ETC.) SHALL BE COATED WITH Z-MAX CORROSION RESISTANCE.
21. ALL FASTENING SHALL COMPLY WITH TABLE 2304.10.1 FASTENING SCHEDULE OF THE RHODE ISLAND STATE BUILDING CODE.

THOMAS P. GRAFE
No. 4735
REGISTERED
PROFESSIONAL ENGINEER

ARCHITECTS
Saccoccio & Associates, Inc.
1085 Park Avenue
Cranston, Rhode Island 02910
tel 401.942.7970
fax 401.942.7975

Consultant
C. A. PRETZER ASSOCIATES INC.
STRUCTURAL ENGINEERS
50 Freeway Drive
Cranston, RI 02920
TEL: 401-785-2690
DESIGN, CONSULTATION, INVESTIGATION

ROGER WILLIAMS PARK ZOO EDUCATION CENTER

ROGER WILLIAMS PARK ZOO
1000 ELMWOOD AVENUE,
PROVIDENCE, RI 02907

Revision Schedule	
Revision Number	Revision Date

ISSUED FOR BID
AUGUST 19, 2024

SHEET TITLE
DESIGN LOADS & GENERAL NOTES

DRAWN BY: JMF	CAPA JOB #: 222834.20
CHECKED BY: TPG	DATE: AUG. 19, 2024

S0.1

SHEET: OF:

File Location: P:\Projects\222834, RWP Educational Ctr, Saccoccio\1. CAPA\222834.30 REDESIGN 2024\222834.30 CAPA RWP ED CTR APR-2024.dwg, Printed on: 8/15/2024, by: Jim Ferreira

STRUCTURAL - CONCRETE CONSTRUCTION SECTION

CONCRETE CONSTRUCTION, INCLUDING COMPOSITE DECK - VERIFY THE FOLLOWING ARE IN COMPLIANCE

IBC Table 1705.3 (ACI 318 References Noted In IBC Table)

TASK	INSPECTION TYPE	DESCRIPTION
1. Inspect reinforcement, including prestressing tendons, and verify placement.	OBSERVE	Verify prior to placing concrete that reinforcing is of specified type, grade and size; that it is free of oil, dirt and unacceptable rust; that it is located and spaced properly; that hooks, bends, ties, stirrups and supplemental reinforcement are placed correctly; that lap lengths, stagger and offsets are provided; and that all mechanical connections are installed per the manufacturer's instructions and/or evaluation report.
2. Reinforcing bar welding	OBSERVE	✓ Verify weldability of reinforcing bars other than ASTM A 706 ✓ Inspect single-pass fillet welds, maximum 5/16" in accordance with AWS D1.4
3. Determination of carbon equivalent for reinforcing steel other than ASTM A706	**CONTINUOUS**	Visually inspect all welds in accordance with AWS D1.4
4. Cast in place anchors and post installed drilled anchors (downward inclined)	OBSERVE	Verify prior to placing concrete that cast in place anchors and post installed drilled anchors have proper embedment, spacing and edge distance.
5. Post-installed adhesive anchors in horizontal or upward inclined orientations	**CONTINUOUS AND DOCUMENT**	✓ Inspect as required per approved ICC-ES report ✓ Verify that installer is certified for installation of horizontal and overhead installation applications ✓ Inspect proof loading as required by the contract documents
6. Verify use of required mix design	OBSERVE	Verify that all mixes used comply with the approved construction documents
7. Prior to concrete placement, fabricate specimens for strength tests, perform slump and air content tests, and determine the temperature of concrete	**CONTINUOUS**	At the time fresh concrete is sampled to fabricate specimens for strength test verify these tests are performed by qualified technicians.
8. Inspect concrete and/or shotcrete placement for proper application techniques	**CONTINUOUS**	Verify proper application techniques are used during concrete conveyance and depositing avoids segregation or contamination. Verify that concrete is properly consolidated.
9. Verify maintenance of specified curing temperature and technique	OBSERVE	Inspect curing, cold weather protection, and hot weather protection procedures.
10. Pre-stressed concrete	**CONTINUOUS**	Verify application of prestressing forces and grouting of bonded prestressing tendons.
11. Inspect erection of precast concrete members	OBSERVE	
12. Verify in-situ concrete strength, prior to stressing of tendons in post-tensioned concrete and prior to removal of shores and forms from beams and structural slabs.	OBSERVE	
13. Inspect formwork for shape, location and dimensions of the concrete member being formed.	OBSERVE	
OBSERVE: Observe these items on a random sampling basis daily to insure that applicable requirements are met. Operations need not be delayed pending these inspections at contractor's risk.		
DOCUMENT: Document in a report that work has been performed as required. This is in addition to all other required reports.		
CONTINUOUS: Constant monitoring of identified tasks by a special inspector over the duration of performance of said tasks.		

STRUCTURAL - MASONRY CONSTRUCTION SECTION (ALL RISK CATEGORIES)

MASONRY CONSTRUCTION AT START OF CONSTRUCTION - VERIFY THE FOLLOWING ARE IN COMPLIANCE

IBC 1705.4 (TMS 602-16 Tables 3 & 4)

TASK	INSPECTION TYPE	DESCRIPTION
1. Compliance with approved submittals prior to start	OBSERVE	
2. Proportions of site-mixed mortar.	OBSERVE	
3. Grade and type of reinforcement, anchor bolts, and prestressing tendons and anchorages	OBSERVE	
4. Prestressing technique	OBSERVE	
5. Properties of thin bed mortar for AAC masonry	OBSERVE	
OBSERVE: Observe these items on a random sampling basis daily to insure that applicable requirements are met. Operations need not be delayed pending these inspections at contractor's risk.		

MASONRY CONSTRUCTION PRIOR TO GROUTING - VERIFY THE FOLLOWING ARE IN COMPLIANCE

IBC 1705.4 (TMS 602-16 Tables 3 & 4)

TASK	INSPECTION TYPE	DESCRIPTION
6. Grout space	OBSERVE **CONTINUOUS**	**[NOTE: DOR must either delete 'OBSERVE' for Risk Category IV/V, or delete 'CONTINUOUS' for Risk Categories I/II/ III]**
7. Proportions of site-prepared grout and prestressing grout for bonded tendons	OBSERVE	
8. Proportions of site-mixed grout and prestressing grout for bonded tendons	OBSERVE	
9. Placement of masonry units and mortar joints	OBSERVE	
10. Welding of reinforcement	**CONTINUOUS**	
OBSERVE: Observe these items on a random sampling basis daily to insure that applicable requirements are met. Operations need not be delayed pending these inspections at contractor's risk.		

MASONRY CONSTRUCTION DURING CONSTRUCTION - VERIFY THE FOLLOWING ARE IN COMPLIANCE

IBC 1705.4 (TMS 602-16 Tables 3 & 4)

TASK	INSPECTION TYPE	DESCRIPTION
11. Size and location of structural elements is in compliance	OBSERVE	
12. Preparation, construction, and protection of masonry during cold weather (temperature below 40°F (4.4^{o}C) or hot weather (temp above 90°F (32.2^{o}C))	OBSERVE	
13. Application and measurement of prestressing force	**CONTINUOUS**	
14. Placement of grout and prestressing grout for bonded tendons	**CONTINUOUS**	
15. Placement of AAC masonry units and construction of thin bed mortar joints	**CONTINUOUS**	Continuous for first 5000 square feet only (465 square meters).
16. Observe preparation of grout specimens, mortar specimens, and/or prisms	OBSERVE	
17. Type, size and placement of reinforcement, connectors, anchor bolts and prestressing tendons and anchorages, including details of anchorage of masonry to structural members, frames, or other construction	OBSERVE **CONTINUOUS**	**[NOTE: DOR must either delete 'OBSERVE' for Risk Category IV/V, or delete 'CONTINUOUS' for Risk Categories I/II/ III]**
OBSERVE: Observe these items on a random sampling basis daily to insure that applicable requirements are met. Operations need not be delayed pending these inspections at contractor's risk.		
CONTINUOUS: Constant monitoring of identified tasks by a special inspector over the duration of performance of said tasks.		

STRUCTURAL - WOOD CONSTRUCTION - SEISMIC & WIND SECTION

WOOD CONSTRUCTION SEISMIC & WIND - VERIFY THE FOLLOWING ARE IN COMPLIANCE

2018 IBC 1705.11 & 1705.12.2

TASK	INSPECTION TYPE	DESCRIPTION
1. Nailing, bolting, anchoring and other fastening of elements of the main wind/seismic force-resisting system	OBSERVE (CONTINUOUS FOR GLUING)	Includes connectors for: shearwall sheathing, roof/floor sheathing, drag struts/collectors (double top plates), braces, hold downs, roof connections to exterior walls.
OBSERVE: Observe these items on a random sampling basis daily to insure that applicable requirements are met. Operations need not be delayed pending these inspections at contractor's risk.		

GEOTECHNICAL - SOILS INSPECTION SECTION

SOILS INSPECTION - VERIFY THE FOLLOWING ARE IN COMPLIANCE

IBC 1705.6

TASK	INSPECTION TYPE	DESCRIPTION
1. Materials below shallow foundations are adequate to achieve the design bearing capacity.	OBSERVE	
2. Excavations are extended to proper depth and have reached proper material	OBSERVE	
3. Perform classification and testing of compacted fill materials	OBSERVE	
4. Verify use of proper materials, densities and lift thicknesses during placement and compaction of compacted fill	**CONTINUOUS**	
5. Prior to placement of compacted fill, inspect subgrade and verify that site has been prepared properly.	OBSERVE	During fill placement, the special inspector shall verify that proper materials and procedures are used in accordance with the provisions of the approved geotechnical report
OBSERVE: Observe these items on a random sampling basis daily to insure that applicable requirements are met. Operations need not be delayed pending these inspections at contractor's risk.		
CONTINUOUS: Constant monitoring of identified tasks by a special inspector over the duration of performance of said tasks.		

GEOTECHNICAL - DRIVEN DEEP FOUNDATION ELEMENTS SECTION

DEEP DRIVEN FOUNDATION CONSTRUCTION - VERIFY THE FOLLOWING ARE IN COMPLIANCE

IBC 1705.7

TASK	INSPECTION TYPE	DESCRIPTION
1. Verify element materials, sizes and lengths comply with requirements	**CONTINUOUS**	
2. Inspect driving operations and maintain complete and accurate records for each element	**CONTINUOUS**	
3. Verify placement locations, determine required penetrations to achieve design capacity.	**CONTINUOUS**	
4. Determine capacities of test elements and conduct additional load tests if required.	**CONTINUOUS**	

CONTINUOUS: Constant monitoring of identified tasks by a special inspector over the duration of performance of said tasks.

THOMAS P. GRAFE
No. 3735
REGISTERED
PROFESSIONAL ENGINEER

ARCHITECTS

Saccoccio & Associates, Inc.
1085 Park Avenue
Cranston, Rhode Island
02910
tel 401.942.7970
fax 401.942.7975

Consultant

C. A. PRETZER ASSOCIATES INC.
STRUCTURAL ENGINEERS
50 Freeway Drive
Cranston, RI 02920
TEL: 401-785-2690
DESIGN, CONSULTATION, INVESTIGATION

ROGER WILLIAMS PARK ZOO EDUCATION CENTER

ROGER WILLIAMS PARK ZOO

1000 ELMWOOD AVENUE,
PROVIDENCE, RI 02907

Revision Schedule	
Revision Number	Revision Date

ISSUED FOR BID
AUGUST 19, 2024

SHEET TITLE

SPECIAL INSPECTIONS

DRAWN BY: JMF	CAPA JOB #: 222834.20
CHECKED BY: TPG	DATE: AUG. 19, 2024

S0.2

SHEET: OF:

File Location: P:\Projects\222834, RWP Educational Ctr, Saccoccio\1. CAPA\222834.30 REDESIGN 2024\222834.30 CAPA RWP ED CTR APR-2024.dwg, Printed on: 8/15/2024, by: Jim Ferreira

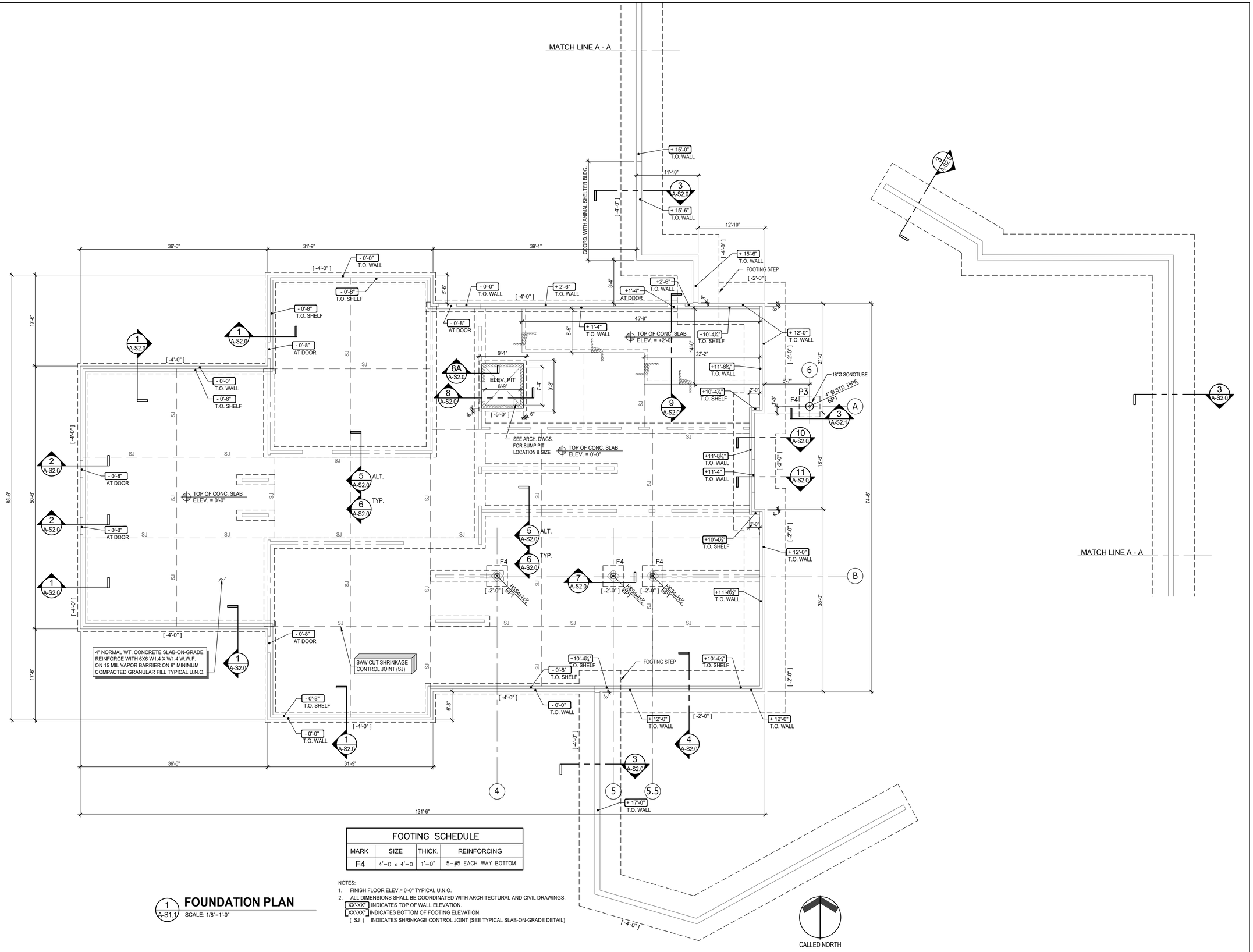

FOOTING SCHEDULE			
MARK	SIZE	THICK.	REINFORCING
F4	4'-0 x 4'-0	1'-0"	5-#5 EACH WAY BOTTOM

NOTES:
1. FINISH FLOOR ELEV.= 0'-0" TYPICAL U.N.O.
2. ALL DIMENSIONS SHALL BE COORDINATED WITH ARCHITECTURAL AND CIVIL DRAWINGS.
   [XX'-XX"] INDICATES TOP OF WALL ELEVATION.
   [XX'-XX"] INDICATES BOTTOM OF FOOTING ELEVATION.
   (SJ) INDICATES SHRINKAGE CONTROL JOINT (SEE TYPICAL SLAB-ON-GRADE DETAIL)

1 A-S1.1 FOUNDATION PLAN

SCALE: 1/8"=1'-0"

File Location: P:\Projects\222834, RWP Educational Ctr, Saccoccio\1. CAPA\222834.30 REDESIGN 2024\222834.30 CAPA RWP ED CTR APR-2024.dwg, Printed on: 8/15/2024, by: Jim Ferreira

THOMAS P. GRAFE
No. 3735
REGISTERED PROFESSIONAL ENGINEER

ARCHITECTS

Saccoccio & Associates, Inc.
1085 Park Avenue
Cranston, Rhode Island
02910
tel 401.942.7970
fax 401.942.7975

Consultant

C. A. PRETZER ASSOCIATES INC.
STRUCTURAL ENGINEERS
50 Freeway Drive
Cranston, RI 02920
TEL: 401-785-2690
DESIGN, CONSULTATION, INVESTIGATION

ROGER WILLIAMS PARK ZOO EDUCATION CENTER

ROGER WILLIAMS PARK ZOO
1000 ELMWOOD AVENUE,
PROVIDENCE, RI 02907

Revision Schedule	
Revision Number	Revision Date

ISSUED FOR BID
AUGUST 19, 2024

SHEET TITLE

FOUNDATION PLAN

DRAWN BY: JMF	CAPA JOB #: 222834.20
CHECKED BY: TPG	DATE: AUG. 19, 2024

A-S1.1

SHEET: OF:

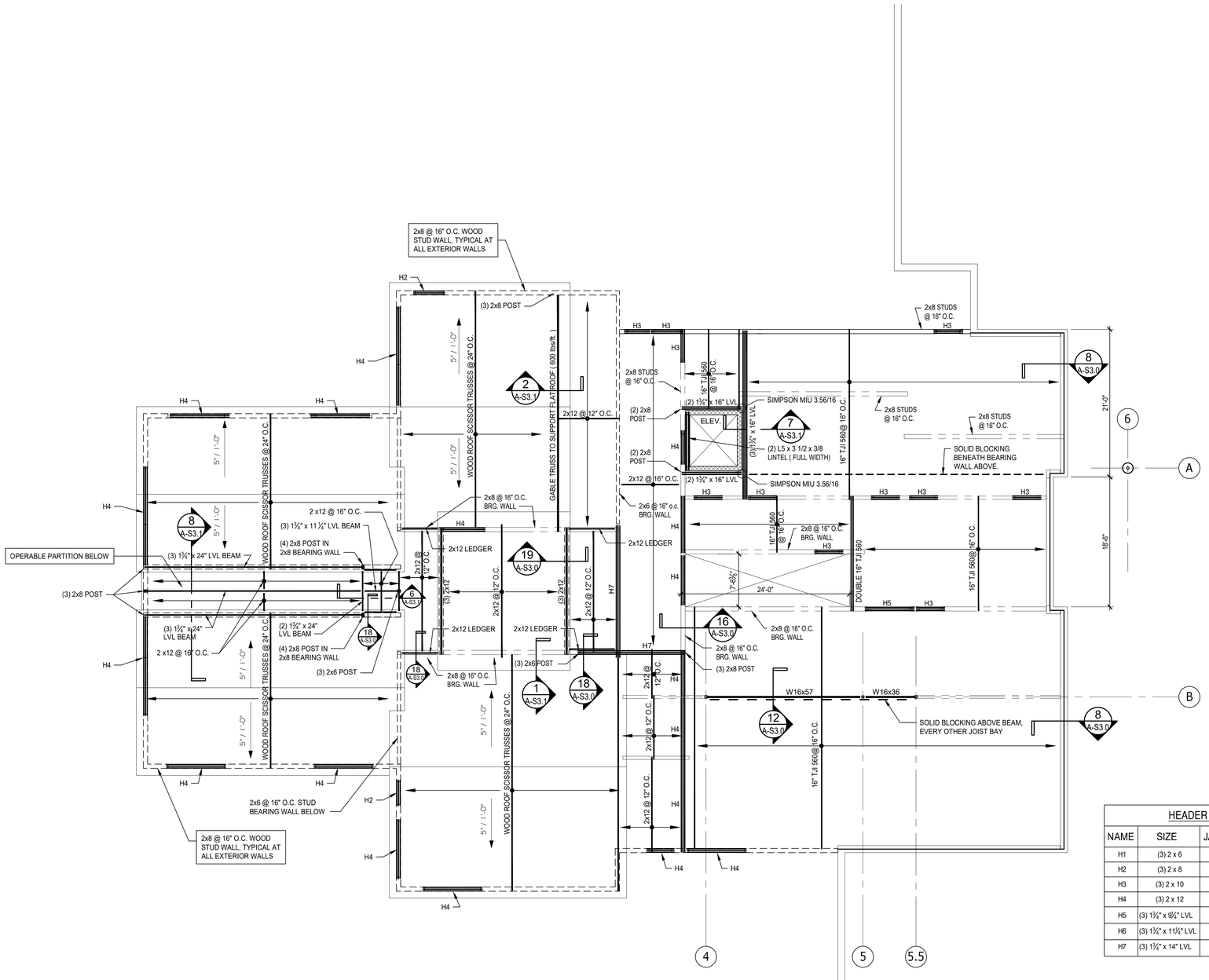

HEADER SCHEDULE

NAME	SIZE	JACK STUDS	KING STUDS
H1	(3) 2 x 6	(2) 2 x 8	(1) 2 x 8
H2	(3) 2 x 8	(2) 2 x 8	(2) 2 x 8
H3	(3) 2 x 10	(2) 2 x 8	(2) 2 x 8
H4	(3) 2 x 12	(2) 2 x 8	(2) 2 x 8
H5	(3) 1¾" x 9¼" LVL	(2) 2 x 8	(2) 2 x 8
H6	(3) 1¾" x 11¼" LVL	(2) 2 x 8	(2) 2 x 8
H7	(3) 1¾" x 14" LVL	(2) 2 x 8	(2) 2 x 8

1 A-S1.2 UPPER LEVEL & LOW ROOF FRAMING PLAN

SCALE: 1/8"=1'-0"

THOMAS P. GRAFE
No. 7735
REGISTERED PROFESSIONAL ENGINEER

ARCHITECTS

Saccoccio & Associates, Inc.
1085 Park Avenue
Cranston, Rhode Island
02910
tel 401.942.7970
fax 401.942.7975

Consultant

C. A. PRETZER ASSOCIATES INC.
STRUCTURAL ENGINEERS
50 Freeway Drive
Cranston, RI 02920
TEL: 401-785-2690
DESIGN, CONSULTATION, INVESTIGATION

ROGER WILLIAMS PARK ZOO EDUCATION CENTER

ROGER WILLIAMS PARK ZOO
1000 ELMWOOD AVENUE,
PROVIDENCE, RI 02907

Revision Schedule	
Revision Number	Revision Date

ISSUED FOR BID
AUGUST 19, 2024

SHEET TITLE

UPPER LEVEL & LOW ROOF FRAMING PLAN

DRAWN BY: JMF	CAPA JOB #: 222834.20
CHECKED BY: TPG	DATE: AUG. 19, 2024

A-S1.2

SHEET: OF:

File Location: P:\Projects\222834, RWP Educational Ctr, Saccoccio\1. CAPA\222834.30 REDESIGN 2024\222834.30 CAPA RWP ED CTR APR-2024.dwg, Printed on: 8/15/2024, by: Jim Ferreira

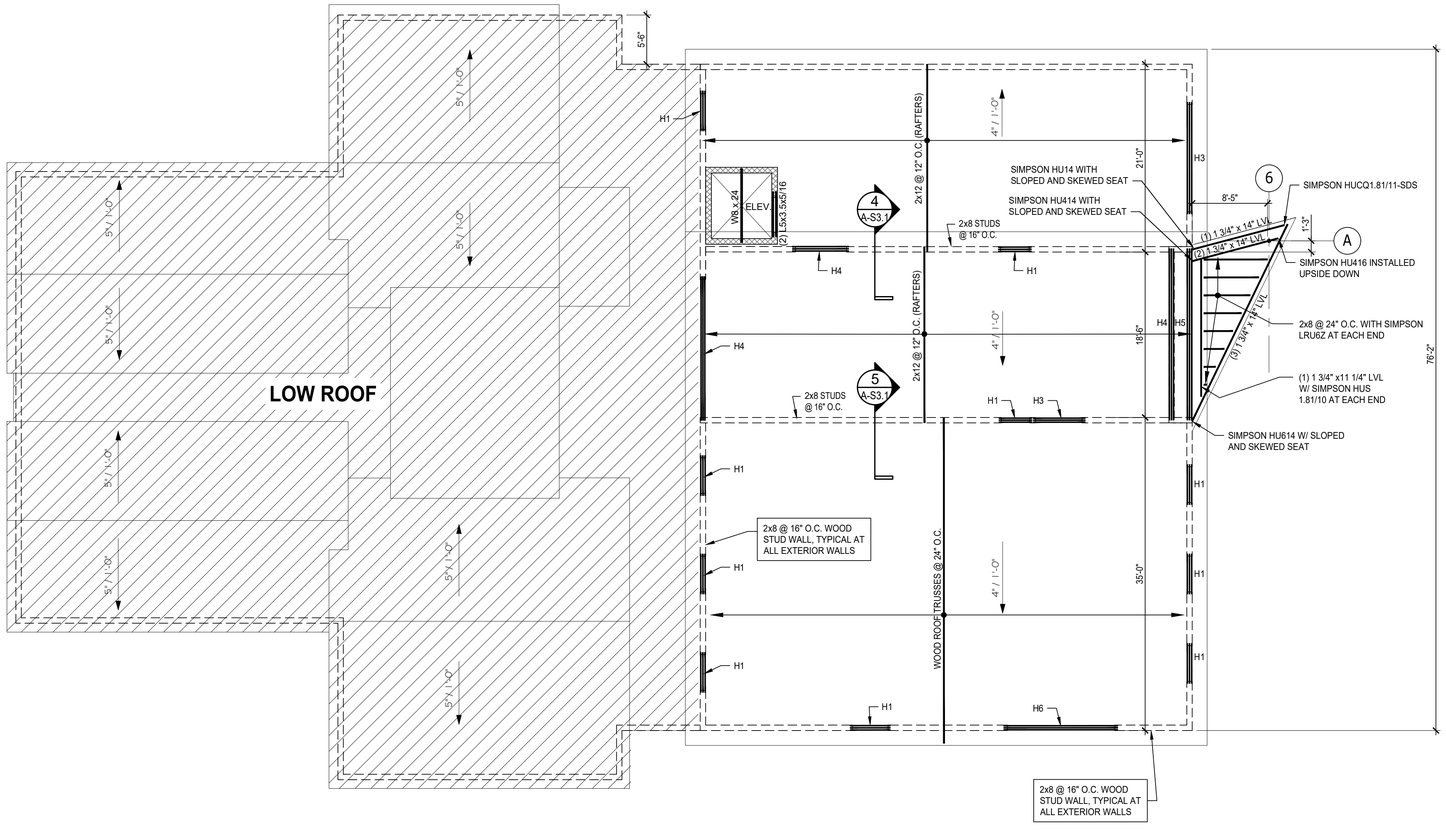

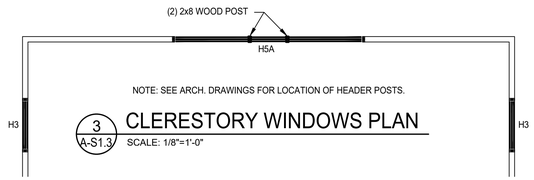

NOTE: SEE ARCH. DRAWINGS FOR LOCATION OF HEADER POSTS.

3 A-S1.3 CLERESTORY WINDOWS PLAN

SCALE: 1/8"=1'-0"

HEADER SCHEDULE			
NAME	SIZE	JACK STUDS	KING STUDS
H1	(3) 2 x 6	(2) 2 x 8	(1) 2 x 8
H2	(3) 2 x 8	(2) 2 x 8	(2) 2 x 8
H3	(3) 2 x 10	(2) 2 x 8	(2) 2 x 8
H4	(3) 2 x 12	(2) 2 x 8	(2) 2 x 8
H5	(3) 1¾" x 9¼" LVL	(2) 2 x 8	(2) 2 x 8
H6	(3) 1¾" x 11¼" LVL	(2) 2 x 8	(2) 2 x 8
H7	(3) 1¾" x 14" LVL	(2) 2 x 8	(2) 2 x 8

* HxA HEADERS SHALL HAVE INTERMEDIATE (2) 2x8 SUPPORTS AT LOCATIONS INDICATED ON PLAN.

FRAMING NOTES

1. ALL ROOF TRUSSES AND OVERHANGING WOOD MEMBERS SHALL BE HELD DOWN WITH HURRICANE ANCHORS PER TRUSS MANUFACTURERS REQUIREMENTS. (MIN. SIMPSON STRONG-TIE H2.5A ON THE EXTERIOR SIDE OF WALL)
2. TRUSSES ARE SHOWN SCHEMATIC, REFER TO MANUFACTURERS DESIGN FOR SIZE AND LOCATION. GIRDER TRUSS HOLD DOWNS TO BE SPECIFIED BY TRUSS MANUFACTURER. GENERAL CONTRACTOR TO RECEIVE SHOP DRAWINGS FROM MANUFACTURER FOR HOLD DOWN REQUIREMENTS.
3. ALL EXTERIOR WALLS SHALL BE SHEATHED WITH HUBER ZIPWALL SYSTEM R-12 (2 1/2" THICK). FASTEN SHEATHING WITH 0.131" DIA. SHANK NAILS FOR ½" PENETRATION INTO STUD, SPACED AT 3" O.C. ALONG PANEL EDGE AND 12" O.C. AT PANEL INFILL. BLOCK ALL PANEL EDGES SOLID.

TRUSS DESIGN LOAD REQUIREMENTS

LIVE LOAD TOP CHORD .....30 PSF
DEAD LOAD TOP CHORD .....15 PSF
LIVE LOAD BOT CHORD .....20 PSF (AS REQ'D)
MECHANICAL LIVE LOAD BOT CHORD .....50 PSF
DEAD LOAD BOT CHORD .....10 PSF

1 A-S1.3 **ROOF FRAMING PLAN**

SCALE: 1/8"=1'-0"

CALLED NORTH

THOMAS P. GRAFE
No. 3735
REGISTERED PROFESSIONAL ENGINEER

ARCHITECTS

Saccoccio & Associates, Inc.
1085 Park Avenue
Cranston, Rhode Island
02910
tel 401.942.7970
fax 401.942.7975

Consultant

C. A. PRETZER ASSOCIATES INC.
STRUCTURAL ENGINEERS
50 Freeway Drive
Cranston, RI 02920
TEL: 401-785-2690
DESIGN, CONSULTATION, INVESTIGATION

ROGER WILLIAMS PARK ZOO EDUCATION CENTER

ROGER WILLIAMS PARK ZOO
1000 ELMWOOD AVENUE,
PROVIDENCE, RI 02907

Revision Schedule	
Revision Number	Revision Date

ISSUED FOR BID
AUGUST 19, 2024

SHEET TITLE

ROOF FRAMING PLAN

DRAWN BY: JMF	CAPA JOB #: 222834.20
CHECKED BY: TPG	DATE: AUG. 19, 2024

A-S1.3

SHEET: OF:

File Location: P:\Projects\222834, RWP Educational Ctr, Saccoccio\1. CAPA\222834.30 REDESIGN 2024\222834.30 CAPA RWP ED CTR APR-2024.dwg, Printed on: 8/15/2024, by: Jim Ferreira

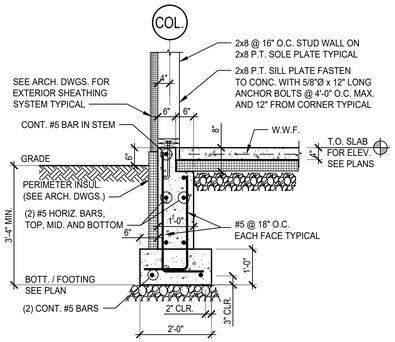

1 SECTION
A-S2.0 SCALE: 1/2"=1'-0"

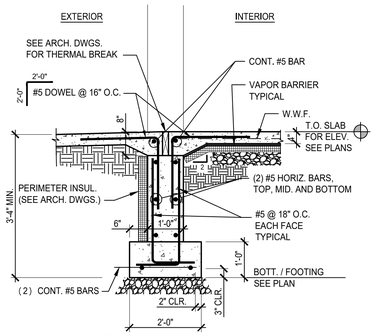

2 SECTION
A-S2.0 SCALE: 1/2"=1'-0"

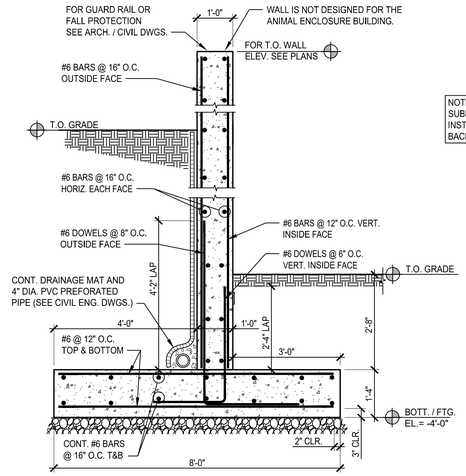

3 RETAINING WALL SECTION
A-S2.0 SCALE: 1/2"=1'-0"

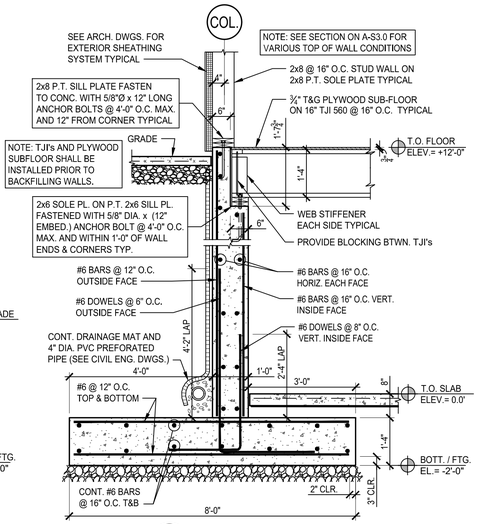

4 SECTION
A-S2.0 SCALE: 1/2"=1'-0"

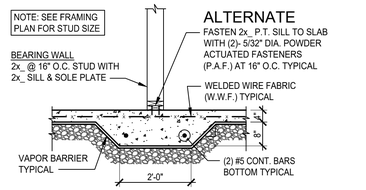

5 ALTERNATE SECTION
A-S2.0 SCALE: 1/2"=1'-0"

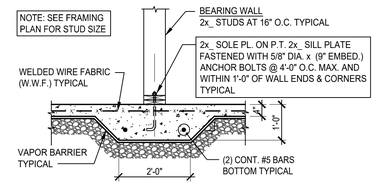

6 SECTION
A-S2.0 SCALE: 1/2"=1'-0"

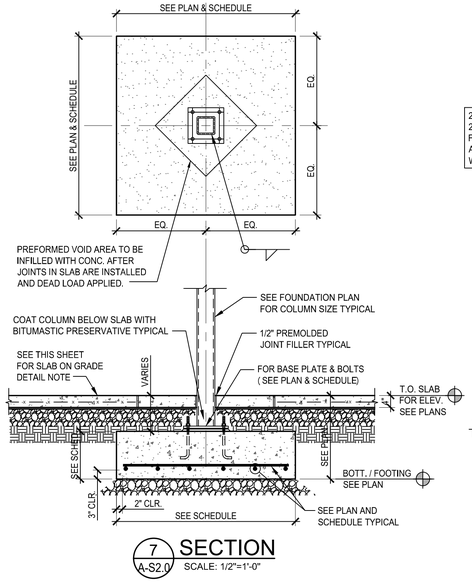

7 SECTION
A-S2.0 SCALE: 1/2"=1'-0"

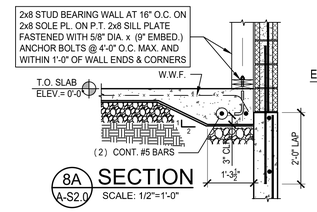

8A SECTION
A-S2.0 SCALE: 1/2"=1'-0"

ELEVATOR SHAFT

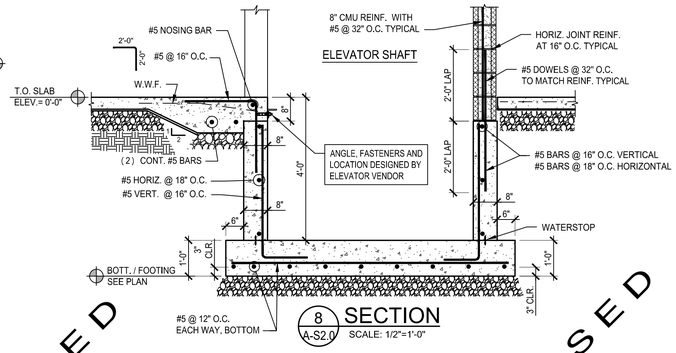

8 SECTION
A-S2.0 SCALE: 1/2"=1'-0"

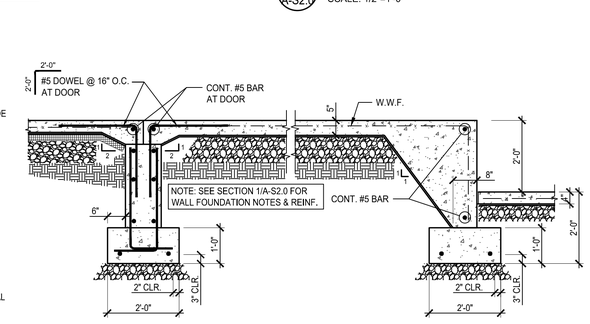

9 SECTION
A-S2.0 SCALE: 1/2"=1'-0"

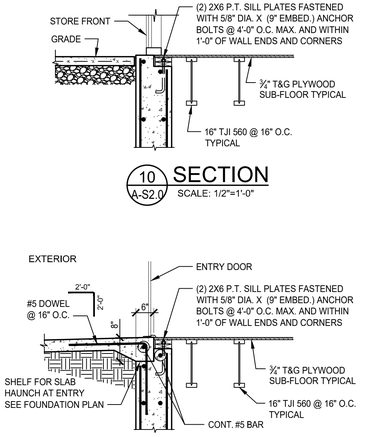

10 SECTION
A-S2.0 SCALE: 1/2"=1'-0"

11 SECTION
A-S2.0 SCALE: 1/2"=1'-0"

NOT USED

NOT USED

NOT USED

NOT USED

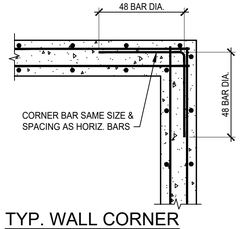

TYP. WALL CORNER

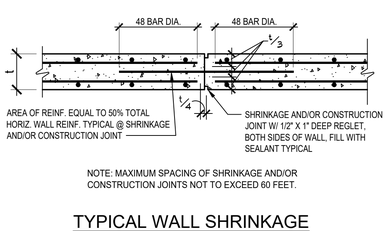

TYPICAL WALL SHRINKAGE AND/OR CONSTRUCTION JOINT

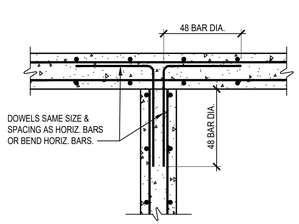

TYP. WALL INTERSECTION

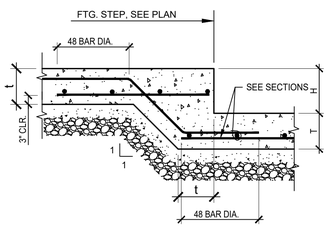

TYP. FOOTING STEP

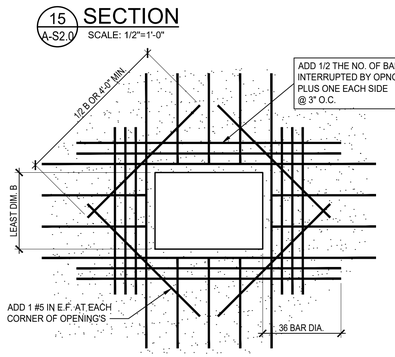

TYP. WALL OPENING DETAIL

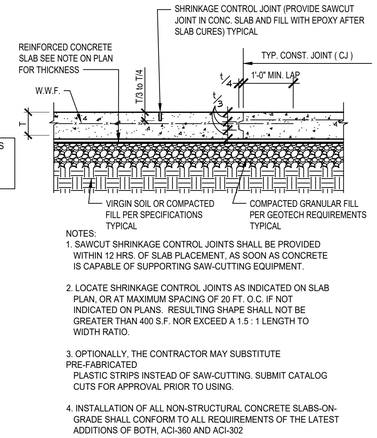

NOTES:
1. SAWCUT SHRINKAGE CONTROL JOINTS SHALL BE PROVIDED WITHIN 12 HRS. OF SLAB PLACEMENT, AS SOON AS CONCRETE IS CAPABLE OF SUPPORTING SAW-CUTTING EQUIPMENT.

2. LOCATE SHRINKAGE CONTROL JOINTS AS INDICATED ON SLAB PLAN, OR AT MAXIMUM SPACING OF 20 FT. O.C. IF NOT INDICATED ON PLANS. RESULTING SHAPE SHALL NOT BE GREATER THAN 400 S.F. NOR EXCEED A 1.5 : 1 LENGTH TO WIDTH RATIO.

3. OPTIONALLY, THE CONTRACTOR MAY SUBSTITUTE PRE-FABRICATED PLASTIC STRIPS INSTEAD OF SAW-CUTTING. SUBMIT CATALOG CUTS FOR APPROVAL PRIOR TO USING.

4. INSTALLATION OF ALL NON-STRUCTURAL CONCRETE SLABS-ON-GRADE SHALL CONFORM TO ALL REQUIREMENTS OF THE LATEST ADDITIONS OF BOTH, ACI-360 AND ACI-302

TYP. SLAB-ON-GRADE DETAIL

File Location: P:\Projects\222834, RWP Educational Ctr, Saccoccio\1. CAPA\222834.30 REDESIGN 20241222834.30 CAPA RWP ED CTR APR-2024.dwg, Printed on: 8/15/2024, by: Jim Ferreira

THOMAS P. GRAFE
No. 3735
REGISTERED PROFESSIONAL ENGINEER

ARCHITECTS
Saccoccio & Associates, Inc.
1085 Park Avenue
Cranston, Rhode Island
02910
tel 401.942.7970
fax 401.942.7975

Consultant
C. A. PRETZER ASSOCIATES INC.
STRUCTURAL ENGINEERS
50 Freeway Drive
Cranston, RI 02920
TEL: 401-785-2690
DESIGN, CONSULTATION, INVESTIGATION

ROGER WILLIAMS PARK ZOO EDUCATION CENTER

ROGER WILLIAMS PARK ZOO
1000 ELMWOOD AVENUE, PROVIDENCE, RI 02907

Revision Schedule	
Revision Number	Revision Date

ISSUED FOR BID
AUGUST 19, 2024

SHEET TITLE

FOUNDATION SECTIONS AND DETAILS

DRAWN BY: JMF	CAPA JOB #: 222834.20
CHECKED BY: TPG	DATE: AUG. 19, 2024

A-S2.0

SHEET: OF:

NOT USED

NOT USED

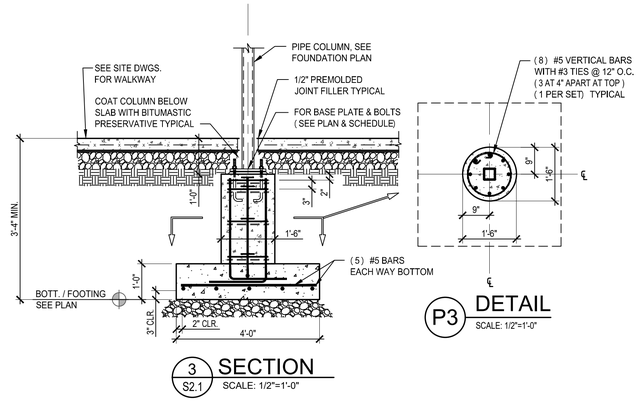

1 / A-S2.1 SECTION
SCALE: 1/2"=1'-0"

2 / A-S2.1 SECTION
SCALE: 1/2"=1'-0"

3 / S2.1 SECTION
SCALE: 1/2"=1'-0"

P3 DETAIL
SCALE: 1/2"=1'-0"

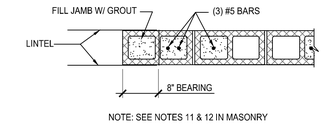

NOTE: SEE NOTES 11 & 12 IN MASONRY NOTES SECTION ON SHEET S0.1

TYPICAL JAMB DETAIL

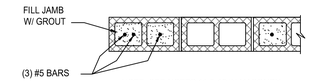

NOTE: SEE NOTES 11 & 12 IN MASONRY NOTES SECTION ON SHEET S0.1

TYPICAL WALL END

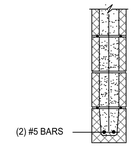

TYPICAL CMU LINTEL
4'-0" MAX. OPENING

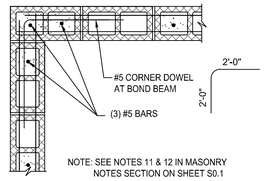

NOTE: SEE NOTES 11 & 12 IN MASONRY NOTES SECTION ON SHEET S0.1

TYPICAL BOND BEAM CORNER

ANCHOR BOLT DETAIL

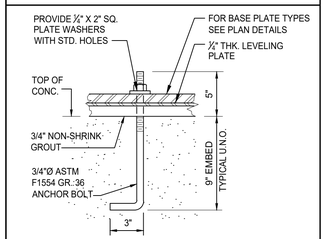

TYPE 'AB-1'
N.T.S.

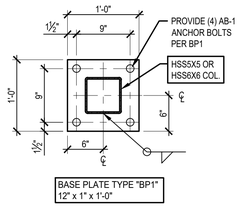

BASE PLATE TYPE BP1
SCALE: 1"= 1'-0"

NOT USED

BASE PLATE TYPE BP2
SCALE: 1"= 1'-0"

NOT USED

BASE PLATE TYPE BP3
SCALE: 1"= 1'-0"

NOT USED

P1 DETAIL
SCALE: 1"=1'-0"

NOT USED

P2 DETAIL
SCALE: 1"=1'-0"

THOMAS P. GRAFE
No. 3735
REGISTERED PROFESSIONAL ENGINEER

ARCHITECTS

Saccoccio & Associates, Inc.
1085 Park Avenue
Cranston, Rhode Island
02910
tel 401.942.7970
fax 401.942.7975

Consultant

C. A. PRETZER ASSOCIATES INC.
STRUCTURAL ENGINEERS
50 Freeway Drive
Cranston, RI 02920
TEL: 401-785-2690
DESIGN, CONSULTATION, INVESTIGATION

ROGER WILLIAMS PARK ZOO EDUCATION CENTER

ROGER WILLIAMS PARK ZOO

1000 ELMWOOD AVENUE,
PROVIDENCE, RI 02907

Revision Schedule	
Revision Number	Revision Date

ISSUED FOR BID
AUGUST 19, 2024

SHEET TITLE

BASEPLATE, AND MASONRY DETAILS

DRAWN BY: JMF	CAPA JOB #: 222834.20
CHECKED BY: TPG	DATE: AUG. 19, 2024

A-S2.1

SHEET: OF:

File Location: P:\Projects\222834, RWP Educational Ctr, Saccoccio\1. CAPA\222834.30 REDESIGN 2024\222834.30 CAPA RWP ED CTR APR-2024.dwg, Printed on: 8/15/2024, by: Jim Ferreira

NOT USED

NOT USED

NOT USED

NOT USED

NOT USED

1 A-S3.0 **SECTION** SCALE: 1"=1'-0"

2 A-S3.0 **SECTION** SCALE: 1"=1'-0"

3 A-S3.0 **SECTION** SCALE: 1"=1'-0"

4 A-S3.0 **SECTION** SCALE: 1"=1'-0"

5 A-S3.0 **SECTION** SCALE: 1"=1'-0"

NOT USED

NOT USED

NOT USED

NOT USED

6 A-S3.0 **SECTION** SCALE: 1"=1'-0"

7 A-S3.0 **SECTION** SCALE: 1"=1'-0"

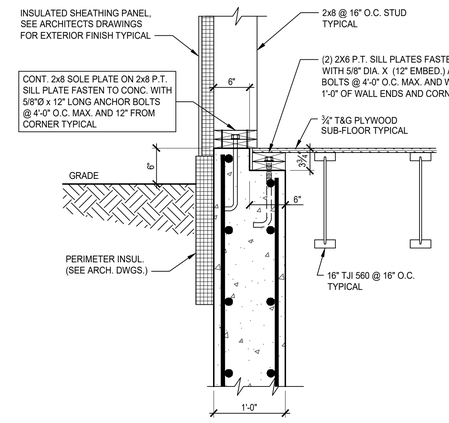

8 A-S3.0 **SECTION** SCALE: 1"=1'-0"

9 A-S3.0 **SECTION** SCALE: 1"=1'-0"

10 A-S3.0 **SECTION** SCALE: 1"=1'-0"

NOT USED

NOT USED

NOT USED

NOT USED

NOT USED

11 A-S3.0 **SECTION** SCALE: 1"=1'-0"

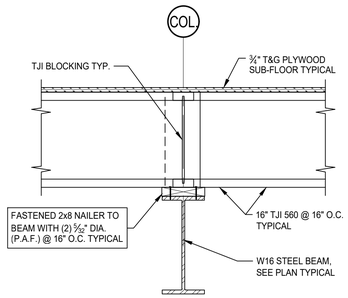

12 A-S3.0 **SECTION** SCALE: 1"=1'-0"

13 A-S3.0 **SECTION** SCALE: 1"=1'-0"

14 A-S3.0 **SECTION** SCALE: 1"=1'-0"

15 A-S3.0 **SECTION** SCALE: 1"=1'-0"

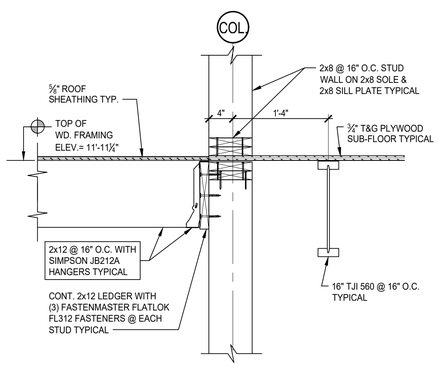

16 A-S3.0 **SECTION** SCALE: 1"=1'-0"

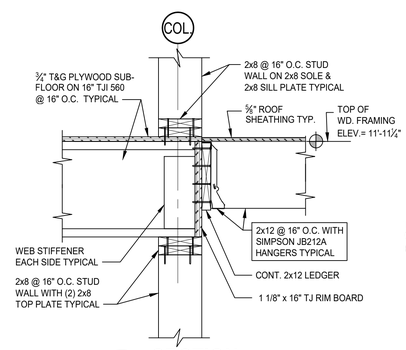

17 A-S3.0 **SECTION** SCALE: 1"=1'-0"

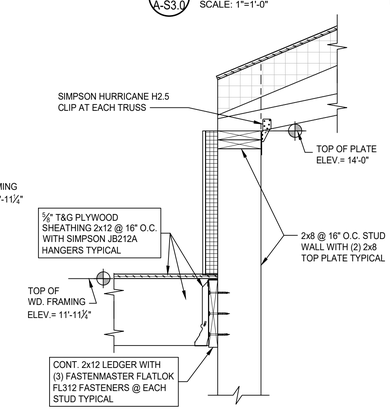

18 A-S3.0 **SECTION** SCALE: 1"=1'-0"

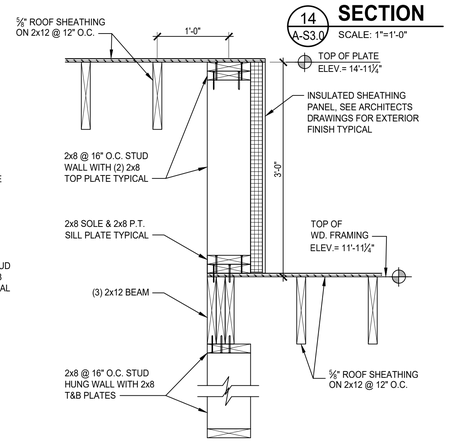

19 A-S3.0 **SECTION** SCALE: 1"=1'-0"

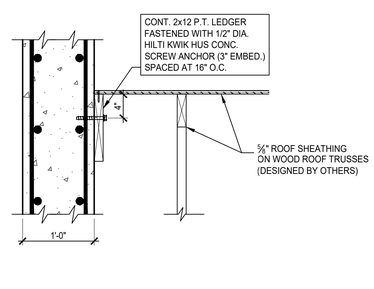

20 A-S3.0 **SECTION** SCALE: 1"=1'-0"

File Location: P:\Projects\222834, RWP Educational Ctr, Saccoccio\1. CAPA\222834.30 REDESIGN 2024\222834.30 CAPA RWP ED CTR APR-2024.dwg, Printed on: 8/15/2024, by: Jim Ferreira

THOMAS P. GRAFE
No. 3735
REGISTERED ARCHITECT
PROFESSIONAL ENGINEER

ARCHITECTS

Saccoccio & Associates, Inc.
1085 Park Avenue
Cranston, Rhode Island
02910
tel 401.942.7970
fax 401.942.7975

Consultant

C. A. PRETZER ASSOCIATES INC.
STRUCTURAL ENGINEERS
50 Freeway Drive
Cranston, RI 02920
TEL 401-785-2690
DESIGN, CONSULTATION, INVESTIGATION

ROGER WILLIAMS PARK ZOO EDUCATION CENTER

ROGER WILLIAMS PARK ZOO
1000 ELMWOOD AVENUE,
PROVIDENCE, RI 02907

Revision Schedule	
Revision Number	Revision Date

ISSUED FOR BID
AUGUST 19, 2024

SHEET TITLE

STEEL FRAMING SECTIONS AND DETAILS

DRAWN BY: JMF	CAPA JOB #: 222834.20
CHECKED BY: TPG	DATE: AUG. 19, 2024

A-S3.0

SHEET: OF:

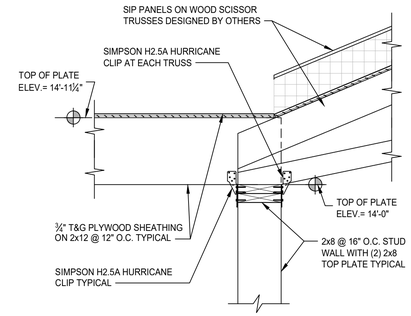

1 A-S3.1 **SECTION** SCALE: 1"=1'-0"

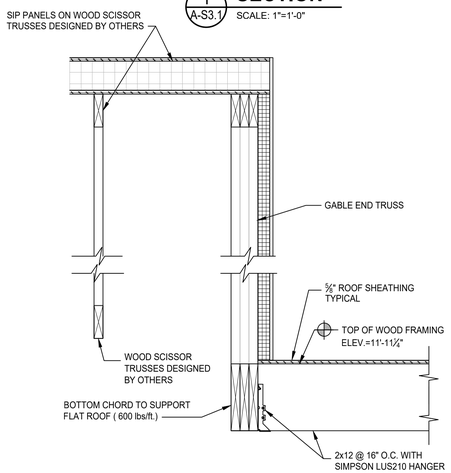

2 A-S3.1 **SECTION** SCALE: 1"=1'-0"

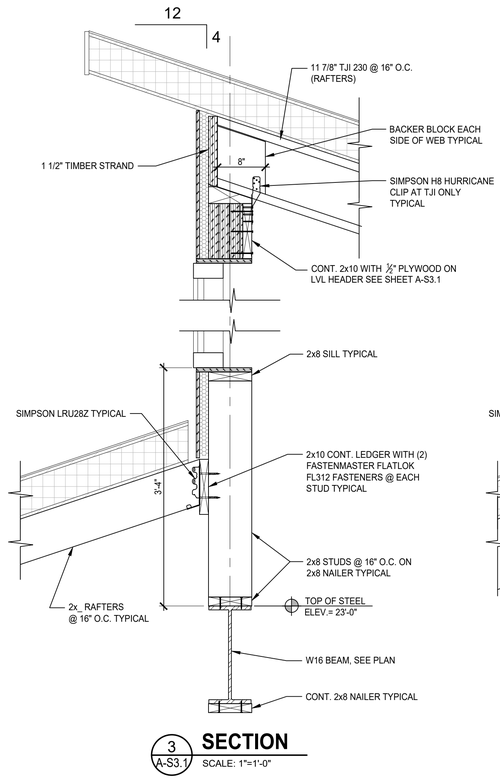

3 A-S3.1 **SECTION** SCALE: 1"=1'-0"

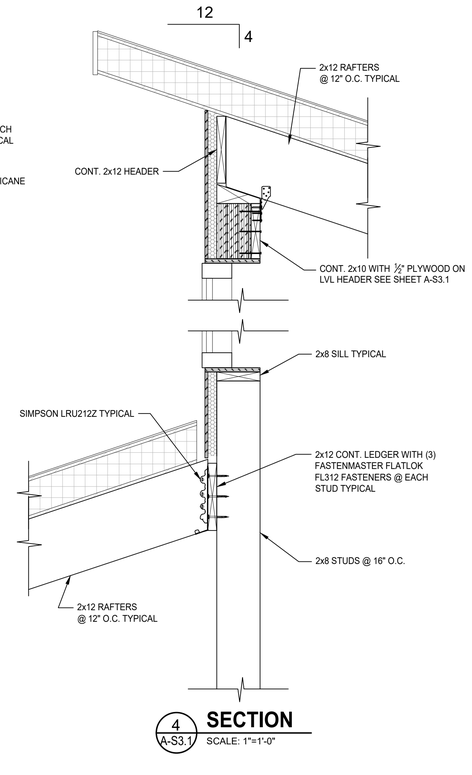

4 A-S3.1 **SECTION** SCALE: 1"=1'-0"

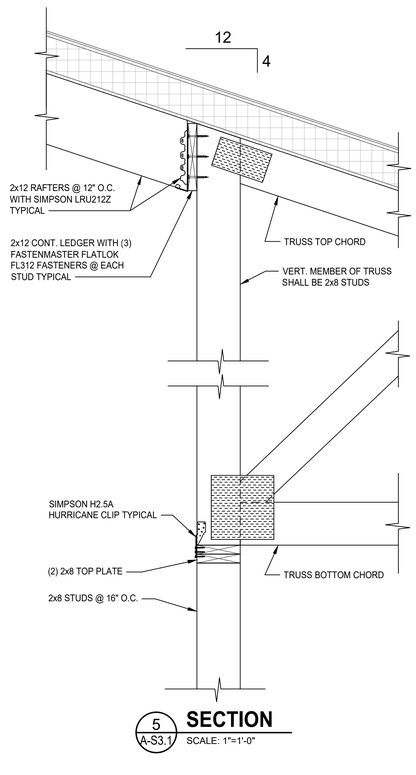

5 A-S3.1 **SECTION** SCALE: 1"=1'-0"

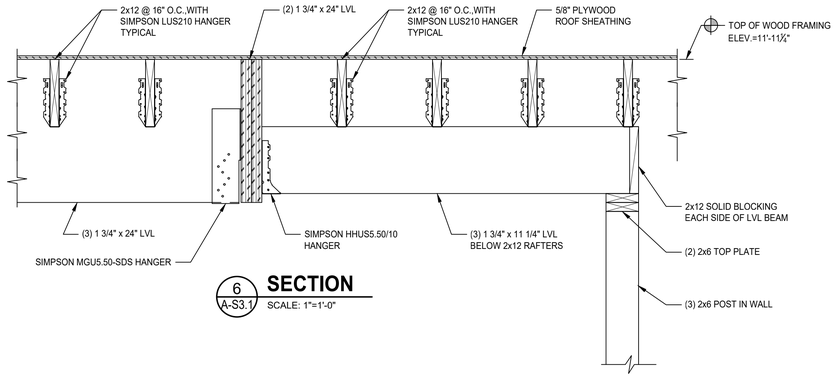

6 A-S3.1 **SECTION** SCALE: 1"=1'-0"

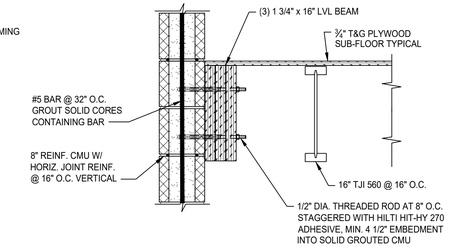

7 A-S3.1 **SECTION** SCALE: 1"=1'-0"

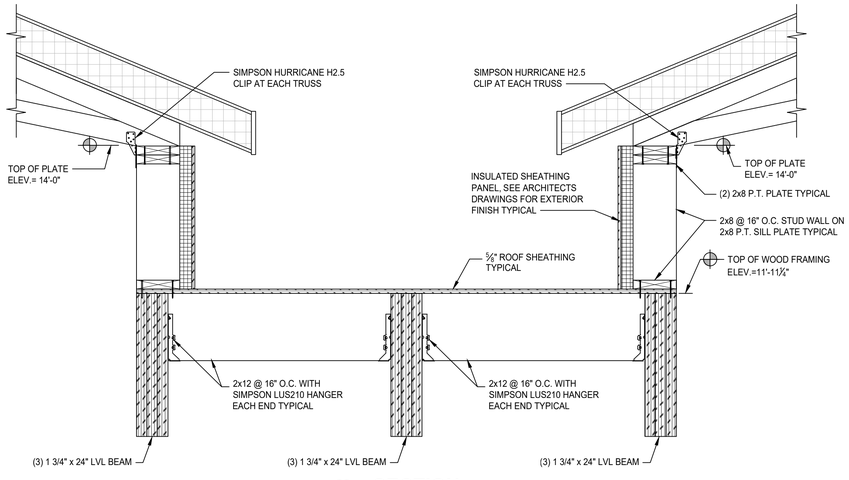

8 A-S3.1 **SECTION** SCALE: 1"=1'-0"

File Location: P:\Projects\222834, RWP Educational Ctr, Saccoccio\1. CAPA\222834.30 REDESIGN 2024\222834.30 CAPA RWP ED CTR APR-2024.dwg, Printed on: 8/15/2024, by: Jim Ferreira

THOMAS P. GRAFE
No. 3735
REGISTERED PROFESSIONAL ENGINEER

ARCHITECTS

Saccoccio & Associates, Inc.
1085 Park Avenue
Cranston, Rhode Island
02910
tel 401.942.7970
fax 401.942.7975

Consultant

C. A. PRETZER ASSOCIATES INC.
STRUCTURAL ENGINEERS
50 Freeway Drive
Cranston, RI 02920
TEL: 401-785-2690
DESIGN, CONSULTATION, INVESTIGATION

ROGER WILLIAMS PARK ZOO EDUCATION CENTER

ROGER WILLIAMS PARK ZOO

1000 ELMWOOD AVENUE, PROVIDENCE, RI 02907

Revision Schedule	
Revision Number	Revision Date

ISSUED FOR BID
AUGUST 19, 2024

SHEET TITLE

SECTIONS AND DETAILS

DRAWN BY: JMF	CAPA JOB #: 222834.20
CHECKED BY: TPG	DATE: AUG. 19, 2024

A-S3.1

SHEET: OF:

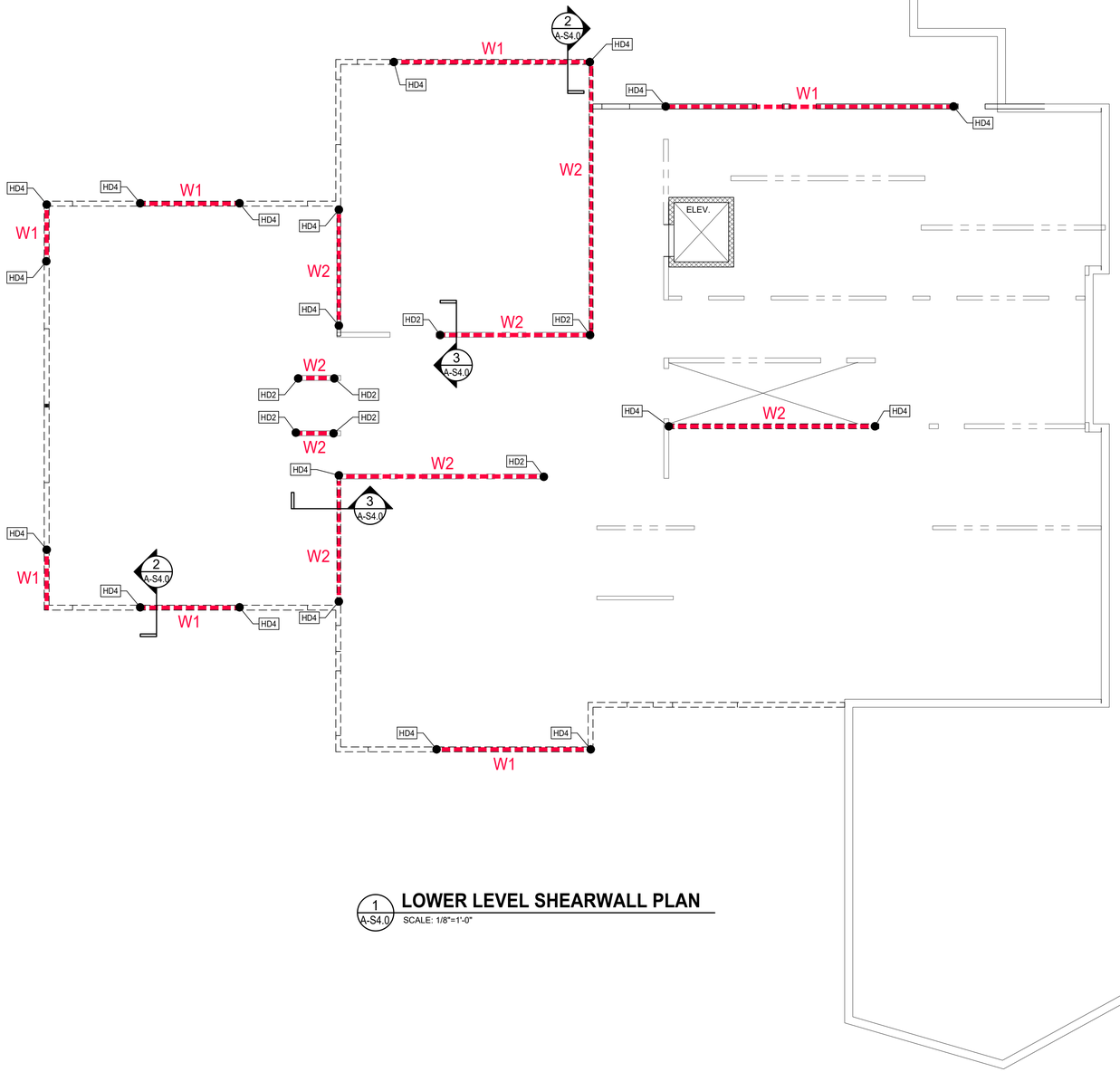

1 A-S4.0 LOWER LEVEL SHEARWALL PLAN

SCALE: 1/8"=1'-0"

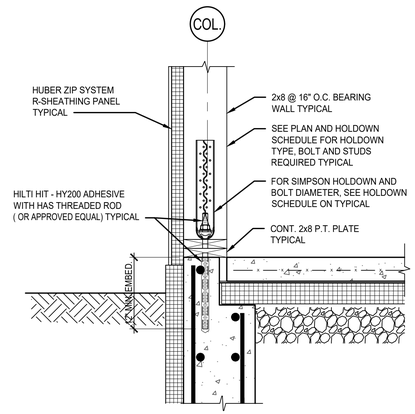

2 A-S4.0 SHEAR WALL HOLDOWN INTO FOUNDATION

SCALE: 1"=1'-0"

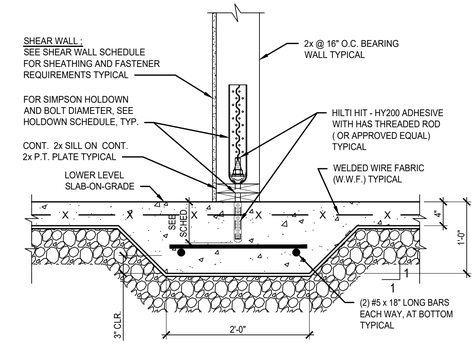

3 A-S4.0 SHEAR WALL HOLDOWN INTO LOWER LEVEL THICKENED SLAB

SCALE: 1"=1'-0"

SHEAR WALL SCHEDULE		
NAME	DESCRIPTION	FASTENER REQUIREMENTS
W1	HUBER ZIPWALL SYSTEM R-12 (2 1/2" THICK)	0.131" DIA. SHANK NAILS FOR 1 1/2" PENETRATION INTO STUD @ 3" O.C. ALONG PANEL EDGES AND 12" O.C. AT PANEL FIELD, BLOCK ALL PANEL EDGES.
W2	5/8" THK. GYP-BOARD ON EACH SIDE	#6 DRYWALL SCREWS @ 8" O.C. ALONG PANEL EDGES AND 12" O.C. AT PANEL FIELD, BLOCK ALL PANEL EDGES.
W3	EXTERIOR SIDE; HUBER ZIPWALL SYSTEM R-12 (2 1/2" THK.) INTERIOR SIDE; 15/32" PLYWOOD SHEATHING	EXTERIOR SIDE, 0.131" DIA. SHANK NAILS FOR 1 1/2" PENETRATION INTO STUD @ 3" O.C. ALONG PANEL EDGES AND 12" O.C. AT PANEL FIELD, BLOCK ALL PANEL EDGES. INTERIOR SIDE, 10d NAILS @ 3" O.C. ALONG PANEL EDGES AND 12" O.C. AT PANEL FIELD, BLOCK ALL PANEL EDGES.
W4	5/8" THK. GYP-BOARD ON ONE SIDE	#6 DRYWALL SCREWS @ 8" O.C. ALONG PANEL EDGES AND 12" O.C. AT PANEL FIELD, BLOCK ALL PANEL EDGES.

HOLDOWN SCHEDULE				
NAME	SIMPSON STRONG-TIE HOLDOWN MODEL NO.	ANCHOR BOLT DIA. (IN.)	No. OF STUDS	EMBED. DEPTH
HD2	HDU2-SDS2.5	5/8"	2	4"
HD4	HDU4-SDS2.5	5/8"	2	6"
HD5	HDU5-SDS2.5	5/8"	2	6"
HD11	HDU11-SDS2.5	1"	3	9"
HD14	HDU14-SDS2.5	1"	3	9"



SHEAR WALL WITH SIMPSON STRONG-TIE HOLDOWNS EACH END OF WALL, IF REQUIRED. REFER TO FRAMING PLAN FOR LOCATION. REFER TO HOLDOWN SCHEDULE FOR MODEL NUMBER AND ANCHOR BOLT SIZE.

THOMAS P. GRAFE
No. 9735
REGISTERED PROFESSIONAL ENGINEER

ARCHITECTS

Saccoccio & Associates, Inc.
1085 Park Avenue
Cranston, Rhode Island
02910
tel 401.942.7970
fax 401.942.7975

Consultant

C. A. PRETZER ASSOCIATES INC.
STRUCTURAL ENGINEERS
50 Freeway Drive
Cranston, RI 02920
TEL: 401-785-2690
DESIGN, CONSULTATION, INVESTIGATION

ROGER WILLIAMS PARK ZOO EDUCATION CENTER

ROGER WILLIAMS PARK ZOO
1000 ELMWOOD AVENUE,
PROVIDENCE, RI 02907

Revision Schedule	
Revision Number	Revision Date

ISSUED FOR BID
AUGUST 19, 2024

SHEET TITLE

LOWER LEVEL SHEAR WALL PLAN

DRAWN BY: JMF	CAPA JOB #: 222834.20
CHECKED BY: TPG	DATE: AUG. 19, 2024

A-S4.0

SHEET: OF:

File Location: P:\Projects\222834, RWP Educational Ctr, Saccoccio\1. CAPA\222834.30 REDESIGN 2024\222834.30 CAPA RWP ED CTR APR-2024.dwg, Printed on: 8/15/2024, by: Jim Ferreira

NOT USED

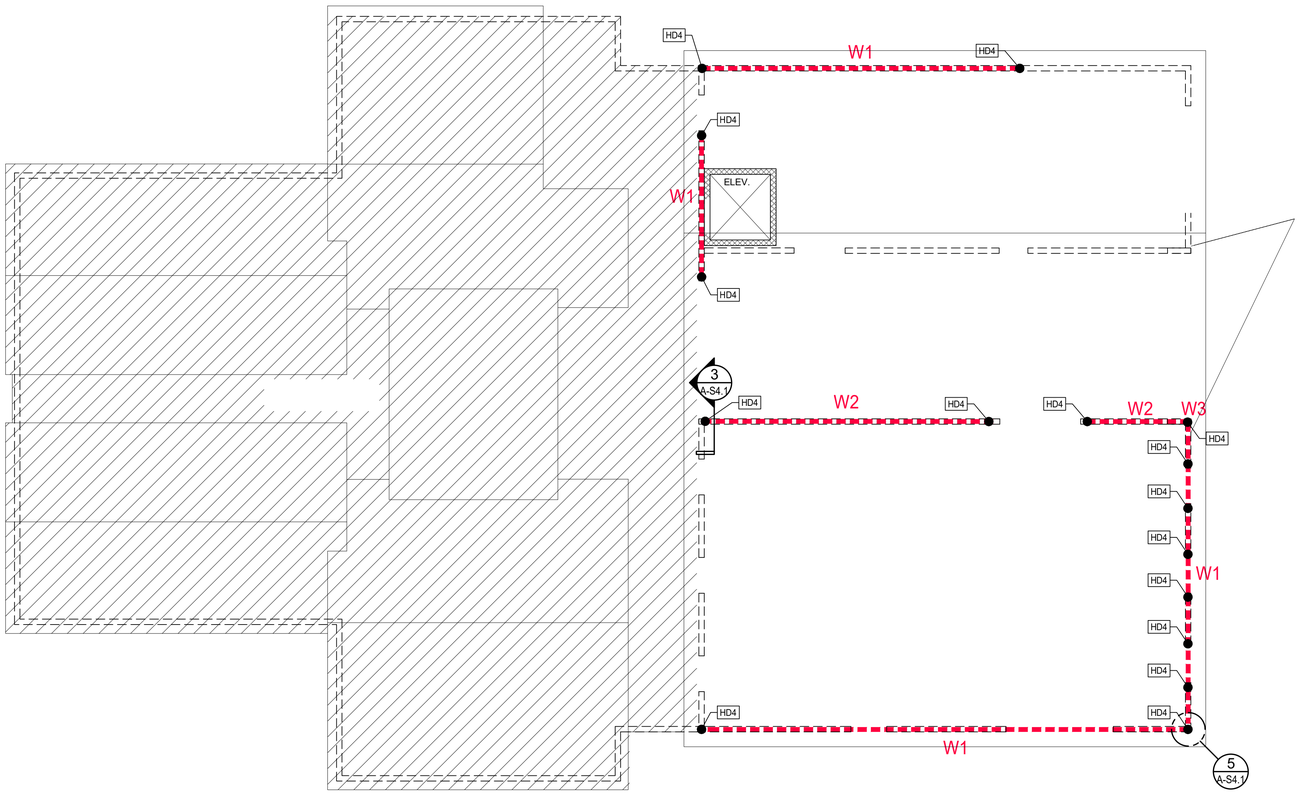

CALLED NORTH

1 A-S4.1 UPPER LEVEL SHEARWALL PLAN
SCALE: 1/8"=1'-0"

2 A-S4.1 SHEAR WALL HOLD DOWN AT UPPER LEVEL STL. BEAM
SCALE: 1"=1'-0"

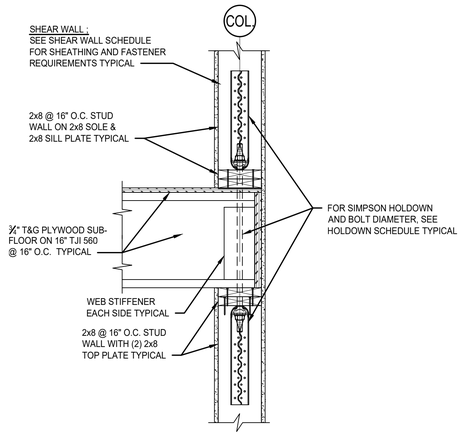

3 A-S4.1 SHEAR WALL HOLDOWN AT UPPER LEVEL
SCALE: 1"=1'-0"

NOT USED

4 A-S4.1 SHEAR WALL HOLDOWN PLAN AT CHASE WALL INTERSECTION
SCALE: 1"=1'-0"

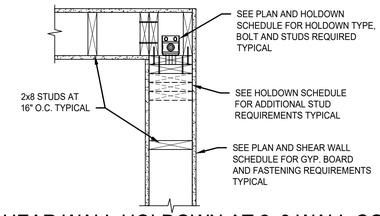

5 A-S4.1 SHEAR WALL HOLDOWN AT 2x8 WALL CORNER
SCALE: 1"=1'-0"

THOMAS P. GRAFE
No. 3735
REGISTERED
ARCHITECT & PROFESSIONAL ENGINEER

ARCHITECTS
Saccoccio & Associates, Inc.
1085 Park Avenue
Cranston, Rhode Island
02910
tel 401.942.7970
fax 401.942.7975

Consultant
C. A. PRETZER ASSOCIATES INC.
STRUCTURAL ENGINEERS
50 Freeway Drive
Cranston, RI 02920
TEL: 401-785-2690
DESIGN, CONSULTATION, INVESTIGATION

ROGER WILLIAMS PARK ZOO EDUCATION CENTER

ROGER WILLIAMS PARK ZOO
1000 ELMWOOD AVENUE,
PROVIDENCE, RI 02907

Revision Schedule	
Revision Number	Revision Date

ISSUED FOR BID
AUGUST 19, 2024

SHEET TITLE

SHEAR WALL PLANS

DRAWN BY: JMF	CAPA JOB #: 222834.20
CHECKED BY: TPG	DATE: AUG. 19, 2024

A-S4.1

SHEET: OF:

File Location: P:\Projects\222834, RWP Educational Ctr, Saccoccio\1. CAPA\222834.30 REDESIGN 2024\222834.30 CAPA RWP ED CTR APR-2024.dwg, Printed on: 8/15/2024, by: Jim Ferreira

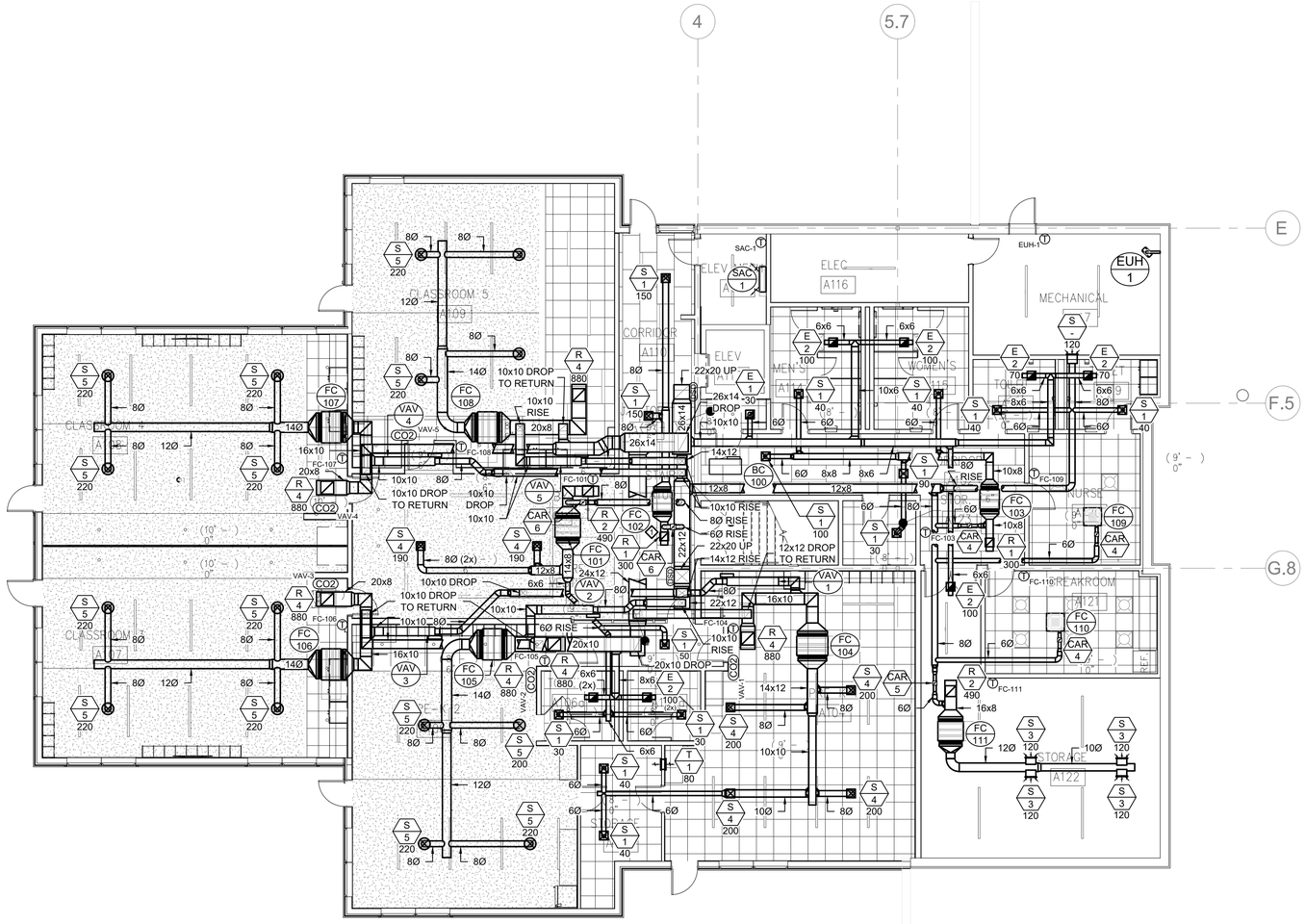

1 A-M1.1 EDUCATION CENTER - LOWER LEVEL PLAN

1/8" = 1'-0"

KEYED MECHANICAL NOTE:

1. THERMOSTAT NOT SHOWN FOR CLARITY. INSTALL ON WALL ADJACENT TO UNIT RETURN GRILLE. COORDINATE FINAL LOCATION OF THERMOSTAT WITH ARCH AS REQUIRED.

MECHANICAL NOTES:

1. FINAL LOCATION OF THERMOSTATS DETERMINED BY OWNER. COORDINATE WITH ARCH. AND MC AS REQUIRED.
2. CONTRACTOR TO COORDINATE DUCT ROUTING AND DIFFUSER LOCATION WITH NEW LIGHTING IN FIELD. COORDINATE WITH E.C. AS REQUIRED.

ARCHITECTS

Saccoccio & Associates, Inc.

1085 Park Avenue
Cranston, Rhode Island
02910

tel 401.942.7970
fax 401.942.7975

Consultant

ENGINEERING DESIGN SERVICES INCORPORATED

Education Center, Animal Building, & Pavilion

ROGER WILLIAMS PARK ZOO

100 ELMWOOD AVENUE
PROVIDENCE, RI 02907

Revision Schedule	
Revision Number	Revision Date

Issued for Bid
08/19/2024

SHEET TITLE

MECHANICAL EDUCATION CENTER LOWER LEVEL PLAN

DRAWN BY: MFM/AJV	JOB NUMBER: 18050
CHECKED BY: WTM	DATE: 08/19/2024

A-M1.1

SHEET: OF:

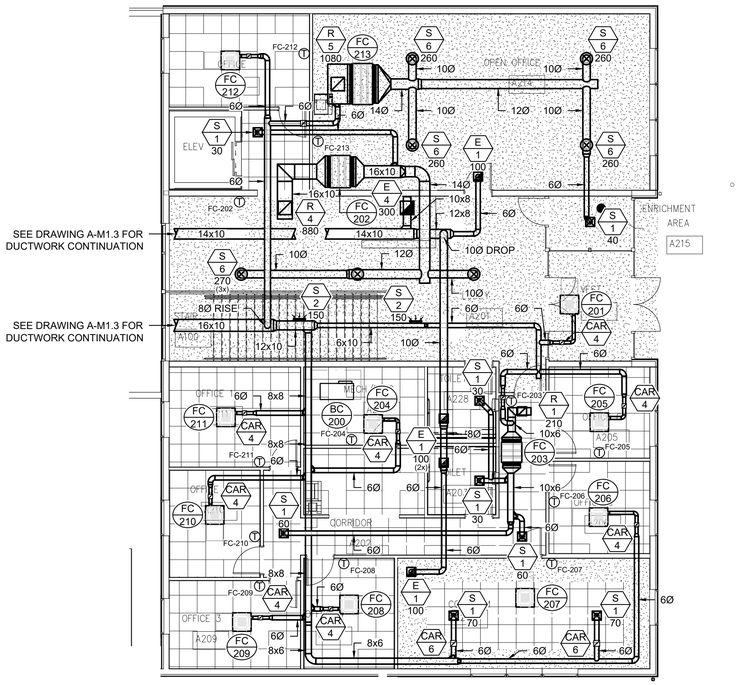

1 A-M1.2 EDUCATION BUILDING - UPPER LEVEL PLAN

1/8" = 1'-0"

MECHANICAL NOTES:

1. FINAL LOCATION OF THERMOSTATS DETERMINED BY OWNER. COORDINATE WITH ARCH. AND MC AS REQUIRED.
2. CONTRACTOR TO COORDINATE DUCT ROUTING AND DIFFUSER LOCATION WITH NEW LIGHTING IN FIELD. COORDINATE WITH E.C. AS REQUIRED.

ARCHITECTS

Saccoccio & Associates, Inc.

1085 Park Avenue
Cranston, Rhode Island
02910

tel 401.942.7970
fax 401.942.7975

Consultant

ENGINEERING DESIGN SERVICES INCORPORATED

Education Center, Animal Building, & Pavilion

ROGER WILLIAMS PARK ZOO

100 ELMWOOD AVENUE
PROVIDENCE, RI 02907

Revision Schedule	
Revision Number	Revision Date

Issued for Bid
08/19/2024

SHEET TITLE

MECHANICAL EDUCATION CENTER UPPER LEVEL PLAN

DRAWN BY:	MFM/AJV	JOB NUMBER:	18050
CHECKED BY:	WTM	DATE:	08/19/2024

A-M1.2

SHEET: OF:

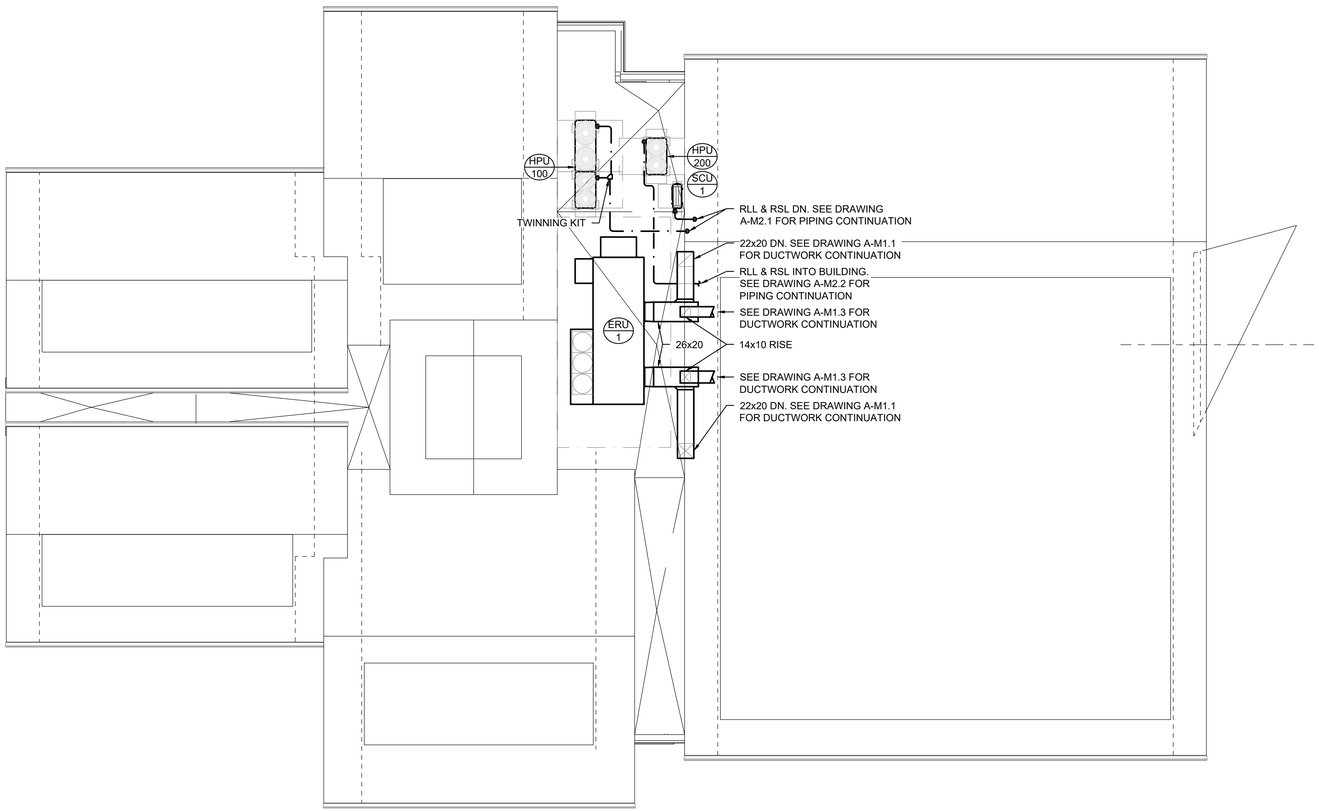

MINIMUM CLEARANCE NOTES:

1. ALL MECHANICAL EQUIPMENT INSTALLED ON ROOF MUST MAINTAIN A MINIMUM OF 10'-0" FROM ROOF EDGE.
2. ALL EXHAUST TERMINATIONS MUST MAINTAIN A MINIMUM OF 10'-0" HORIZONTAL DISTANCE FROM ALL FA INTAKES AND OPENINGS.

1 A-M1.3 EDUCATION BUILDING - ROOF PLAN

1/8" = 1'-0"

ARCHITECTS

Saccoccio & Associates, Inc.
1085 Park Avenue
Cranston, Rhode Island
02910
tel 401.942.7970
fax 401.942.7975

Consultant

ENGINEERING DESIGN SERVICES INCORPORATED

Education Center, Animal Building, & Pavilion

ROGER WILLIAMS PARK ZOO
100 ELMWOOD AVENUE
PROVIDENCE, RI 02907

Revision Schedule	
Revision Number	Revision Date

Issued for Bid
08/19/2024

SHEET TITLE

MECHANICAL EDUCATION CENTER ROOF PLAN

DRAWN BY: MFM/AJV	JOB NUMBER: 18050
CHECKED BY: WTM	DATE: 08/19/2024

A-M1.3

SHEET: OF:

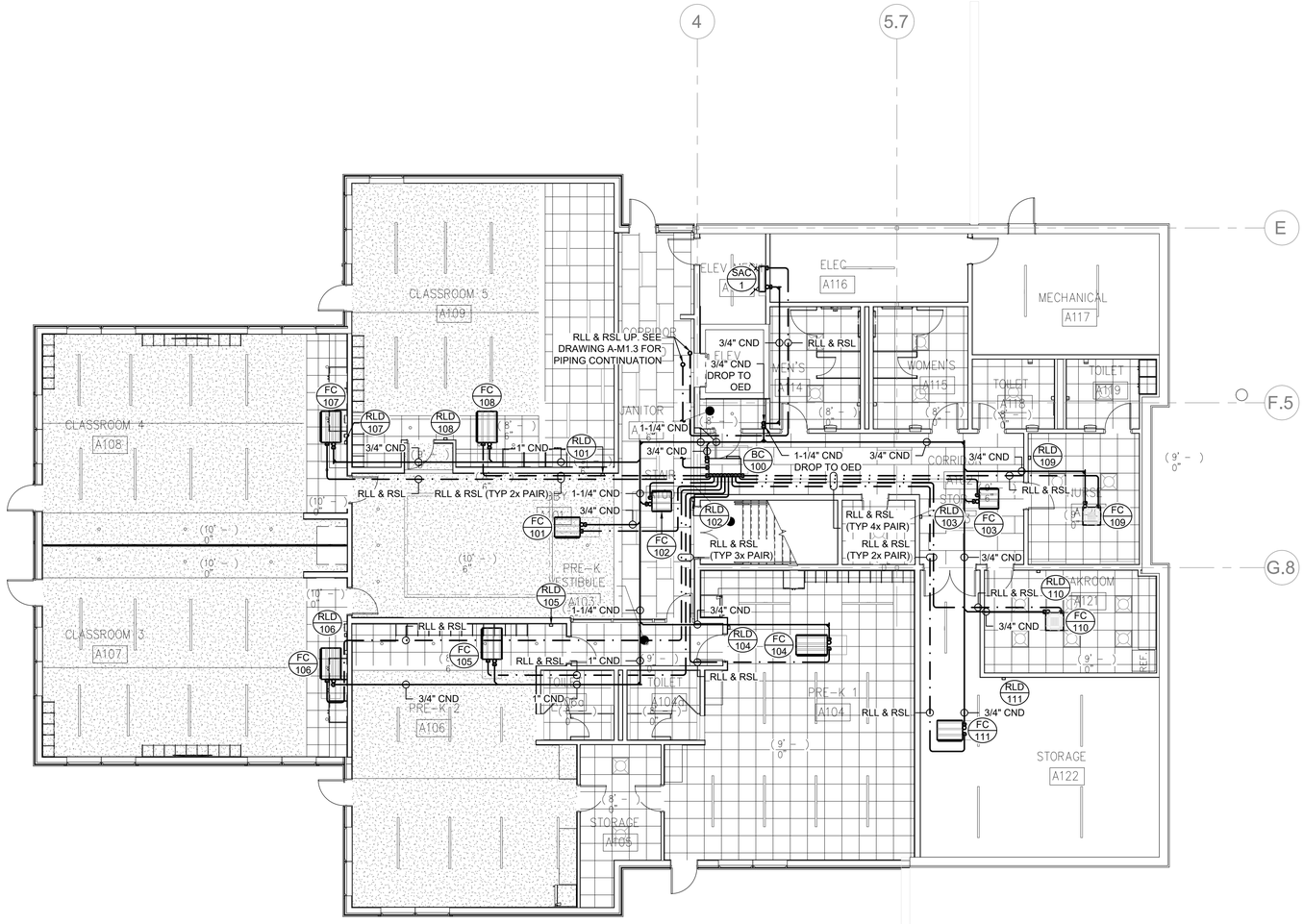

1 A-M2.1 MECHANICAL LOWER LEVER PIPING PLAN

1/8" = 1'-0"

ARCHITECTS

Saccoccio & Associates, Inc.

1085 Park Avenue
Cranston, Rhode Island
02910

tel 401.942.7970
fax 401.942.7975

Consultant

ENGINEERING DESIGN SERVICES INCORPORATED

Education Center, Animal Building, & Pavilion

ROGER WILLIAMS PARK ZOO

100 ELMWOOD AVENUE
PROVIDENCE, RI 02907

Revision Schedule	
Revision Number	Revision Date

Issued for Bid
08/19/2024

SHEET TITLE

MECHANICAL EDUCATION CENTER LOWER LEVEL PIPING PLAN

DRAWN BY: MFM/AJV	JOB NUMBER: 18050
CHECKED BY: WTM	DATE: 08/19/2024

A-M2.1

SHEET: OF:

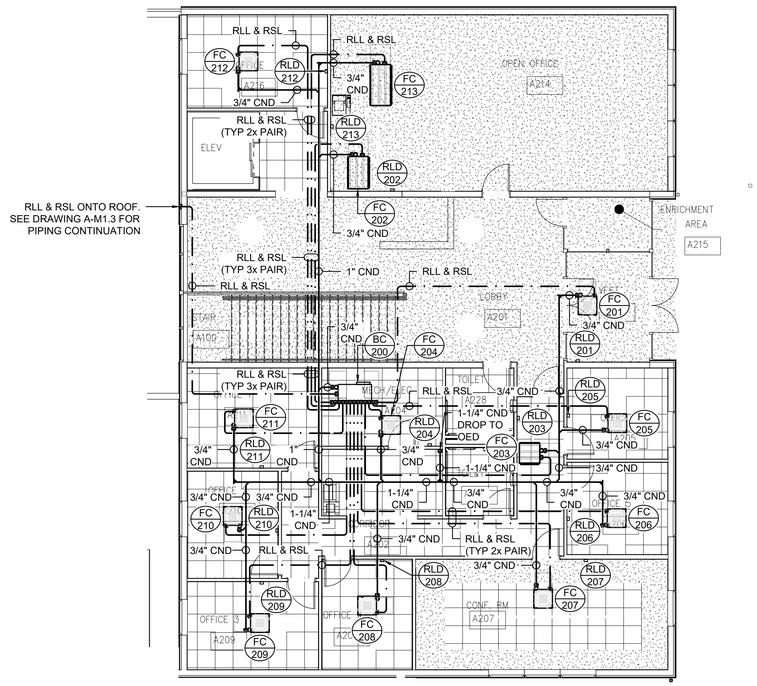

1 A-M2.2 UPPER LEVEL PIPING PLAN
1/8" = 1'-0"

ARCHITECTS

Saccoccio & Associates, Inc.
1085 Park Avenue
Cranston, Rhode Island
02910
tel 401.942.7970
fax 401.942.7975

Consultant

ENGINEERING DESIGN SERVICES INCORPORATED

Education Center, Animal Building, & Pavilion

ROGER WILLIAMS PARK ZOO
100 ELMWOOD AVENUE
PROVIDENCE, RI 02907

Revision Schedule	
Revision Number	Revision Date

Issued for Bid
08/19/2024

SHEET TITLE

MECHANICAL EDUCATION CENTER UPPER LEVEL PIPING PLAN

DRAWN BY: MFM/AJV	JOB NUMBER: 18050
CHECKED BY: WTM	DATE: 08/19/2024

A-M2.2

SHEET: OF:

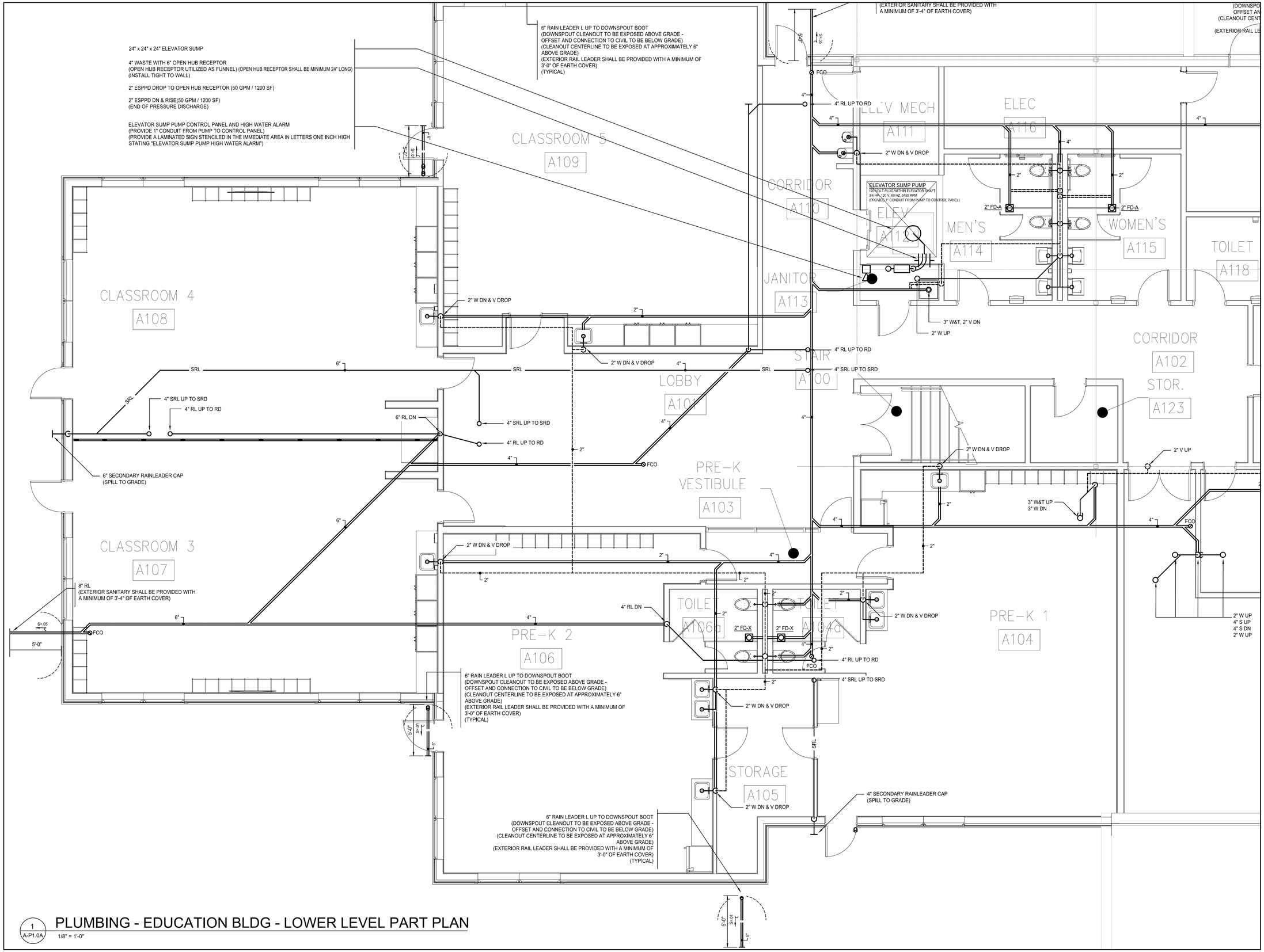

1 A-P1.0A PLUMBING - EDUCATION BLDG - LOWER LEVEL PART PLAN
1/8" = 1'-0"

ARCHITECTS

Saccoccio & Associates, Inc.
1085 Park Avenue
Cranston, Rhode Island
02910
tel 401.942.7970
fax 401.942.7975

Consultant

ENGINEERING DESIGN SERVICES INCORPORATED

Education Center, Animal Building, & Pavilion

ROGER WILLIAMS PARK ZOO
100 ELMWOOD AVENUE
PROVIDENCE, RI 02907

Revision Schedule	
Revision Number	Revision Date

Issued for Bid
08/19/2024

SHEET TITLE

PLUMBING EDUCATION BLDG UNDERSLAB PART PLAN A

DRAWN BY:	GGM	JOB NUMBER:	18050
CHECKED BY:	GGM	DATE:	08/19/2024

A-P1.0A

SHEET: OF:

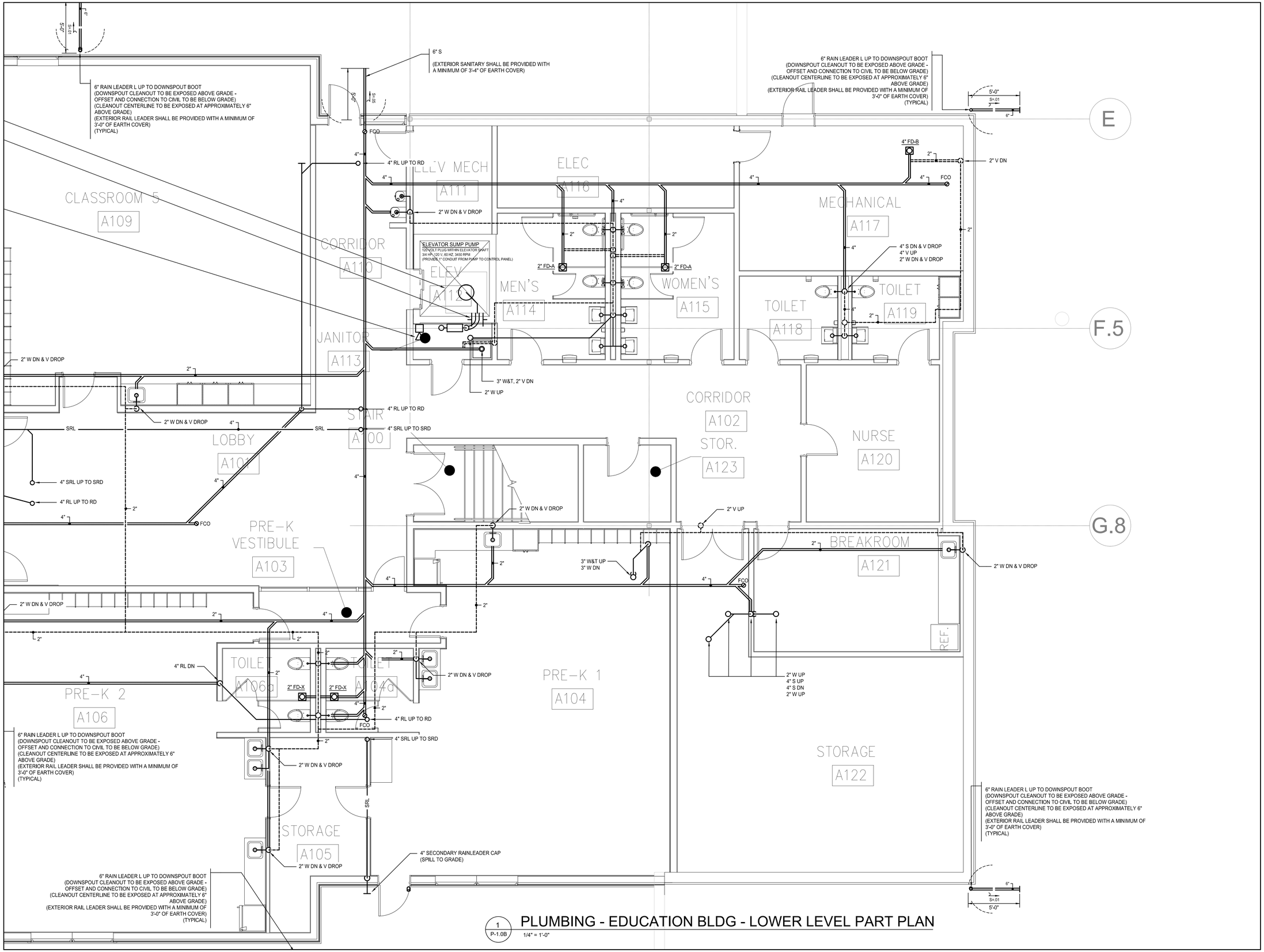

1 P-1.0B PLUMBING - EDUCATION BLDG - LOWER LEVEL PART PLAN

1/4" = 1'-0"

ARCHITECTS

Saccoccio & Associates, Inc.
1085 Park Avenue
Cranston, Rhode Island
02910
tel 401.942.7970
fax 401.942.7975

Consultant

ENGINEERING DESIGN SERVICES INCORPORATED

Education Center, Animal Building, & Pavilion

ROGER WILLIAMS PARK ZOO

100 ELMWOOD AVENUE
PROVIDENCE, RI 02907

Revision Schedule	
Revision Number	Revision Date

Issued for Bid
08/19/2024

SHEET TITLE

PLUMBING EDUCATION BLDG UNDERSLAB PART PLAN B

DRAWN BY:	GGM	JOB NUMBER:	18050
CHECKED BY:	GGM	DATE:	08/19/2024

A-P1.0B

SHEET: OF:

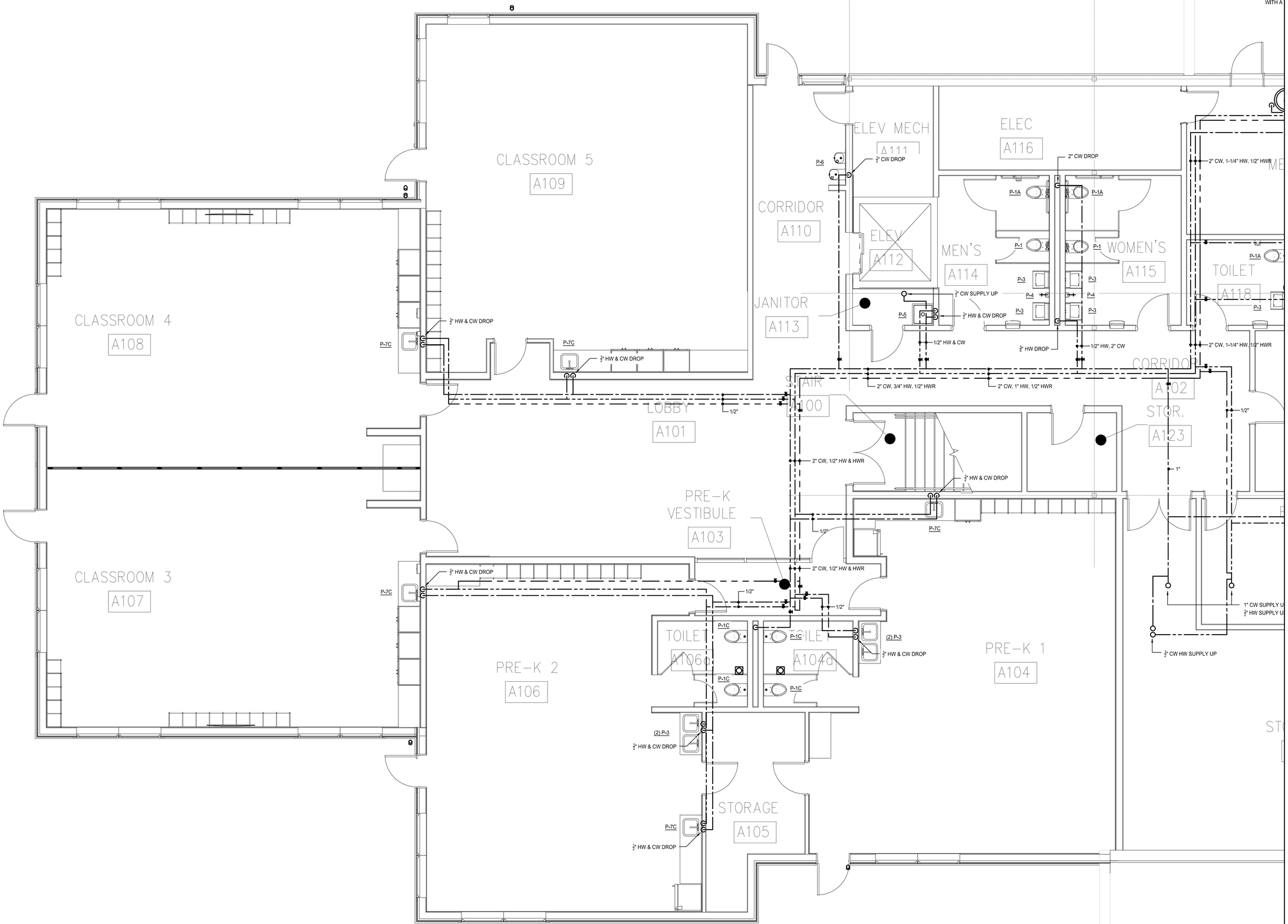

1 A-P1.1A PLUMBING - EDUCATION BLDG - LOWER LEVEL PART PLAN

1/4" = 1'-0"

ARCHITECTS

Saccoccio & Associates, Inc.

1085 Park Avenue
Cranston, Rhode Island
02910

tel 401.942.7970
fax 401.942.7975

Consultant

ENGINEERING DESIGN SERVICES INCORPORATED

Education Center, Animal Building, & Pavilion

ROGER WILLIAMS PARK ZOO

100 ELMWOOD AVENUE
PROVIDENCE, RI 02907

Revision Schedule	
Revision Number	Revision Date

Issued for Bid
08/19/2024

SHEET TITLE

PLUMBING EDUCATION BLDG LOWER LEVEL PART PLAN A

DRAWN BY:	GGM	JOB NUMBER:	18050
CHECKED BY:	GGM	DATE:	08/19/2024

A-P1.1A

SHEET: OF:

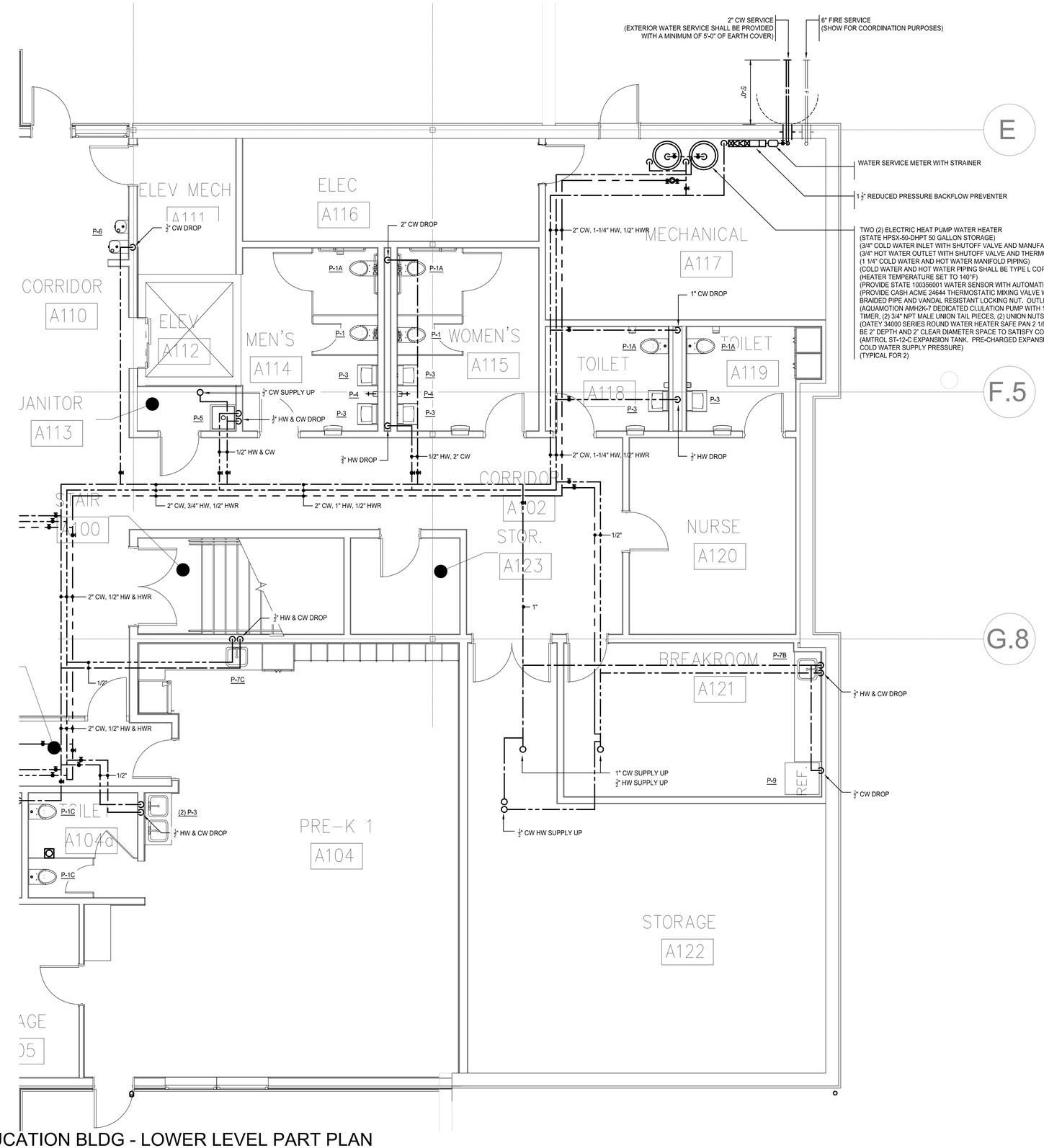

1 A-P1.1B — PLUMBING - EDUCATION BLDG - LOWER LEVEL PART PLAN

1/4" = 1'-0"

ARCHITECTS

Saccoccio & Associates, Inc.

1085 Park Avenue
Cranston, Rhode Island
02910

tel 401.942.7970
fax 401.942.7975

Consultant

ENGINEERING DESIGN SERVICES INCORPORATED
149 Pocasset Turnpike Suite 3 Johnston, RI 02919
Tel (401) 765-7699 Fax (401) 765-2964

Education Center, Animal Building, & Pavilion

ROGER WILLIAMS PARK ZOO

100 ELMWOOD AVENUE
PROVIDENCE, RI 02907

Revision Schedule	
Revision Number	Revision Date

Issued for Bid
08/19/2024

SHEET TITLE

PLUMBING EDUCATION BLDG LOWER LEVEL PART PLAN B

DRAWN BY:	GGM	JOB NUMBER:	18050
CHECKED BY:	GGM	DATE:	08/19/2024

A-P1.1B

SHEET: OF:

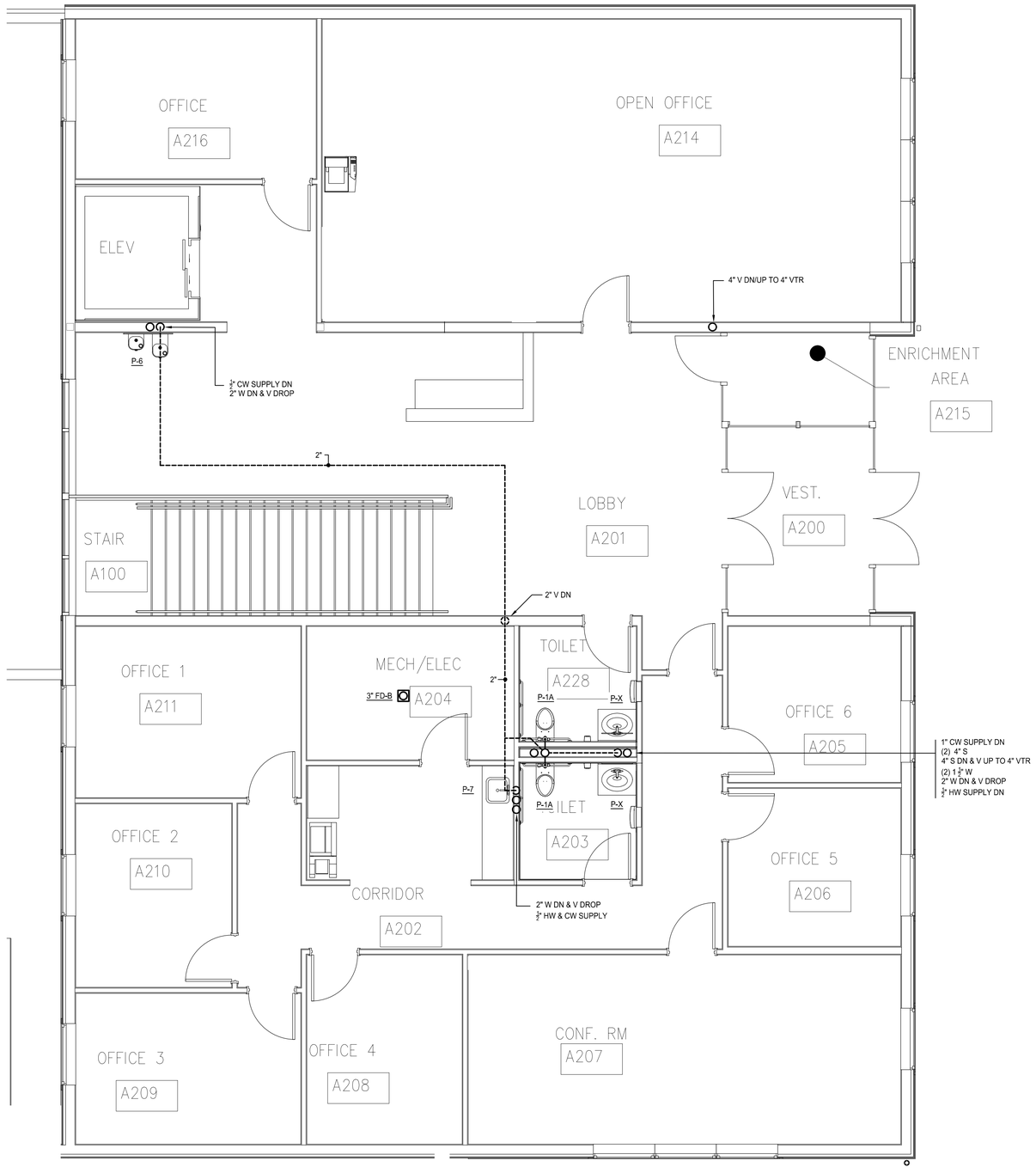

1 A-P1.2 PLUMBING - EDUCATION BLDG - UPPER LEVEL FLOOR PLAN

1/8" = 1'-0"

ARCHITECTS

Saccoccio & Associates, Inc.

1085 Park Avenue
Cranston, Rhode Island
02910

tel 401.942.7970
fax 401.942.7975

Consultant

ENGINEERING DESIGN SERVICES INCORPORATED

Education Center, Animal Building, & Pavilion

ROGER WILLIAMS PARK ZOO

100 ELMWOOD AVENUE
PROVIDENCE, RI 02907

Revision Schedule	
Revision Number	Revision Date

Issued for Bid
08/19/2024

SHEET TITLE

PLUMBING EDUCATION BLDG UPPER LEVEL FLOOR PLAN

DRAWN BY:	GGM	JOB NUMBER:	18050
CHECKED BY:	GGM	DATE:	08/19/2024

A-P1.2

SHEET: OF:

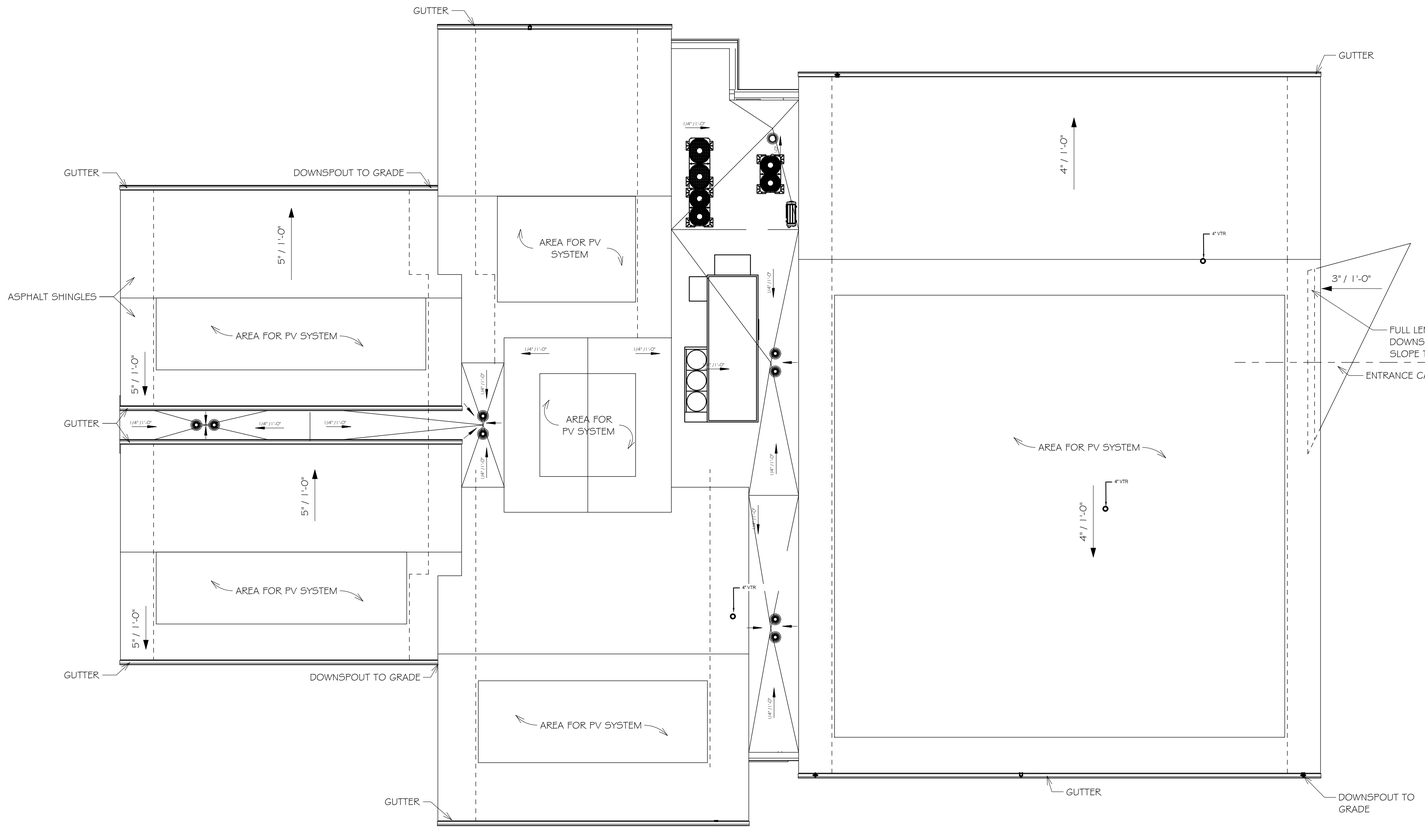

1 A-P1.3 PLUMBING - EDUCATION BLDG - ROOF PLAN

1/8" = 1'-0"

ARCHITECTS

Saccoccio & Associates, Inc.

1085 Park Avenue
Cranston, Rhode Island
02910

tel 401.942.7970
fax 401.942.7975

Consultant

ENGINEERING DESIGN SERVICES INCORPORATED

Education Center, Animal Building, & Pavilion

ROGER WILLIAMS PARK ZOO

100 ELMWOOD AVENUE
PROVIDENCE, RI 02907

Revision Schedule	
Revision Number	Revision Date

Issued for Bid
08/19/2024

SHEET TITLE

PLUMBING EDUCATION BLDG ROOF PLAN

DRAWN BY:	GGM	JOB NUMBER:	18050
CHECKED BY:	GGM	DATE:	08/19/2024

A-P1.3

SHEET: OF:

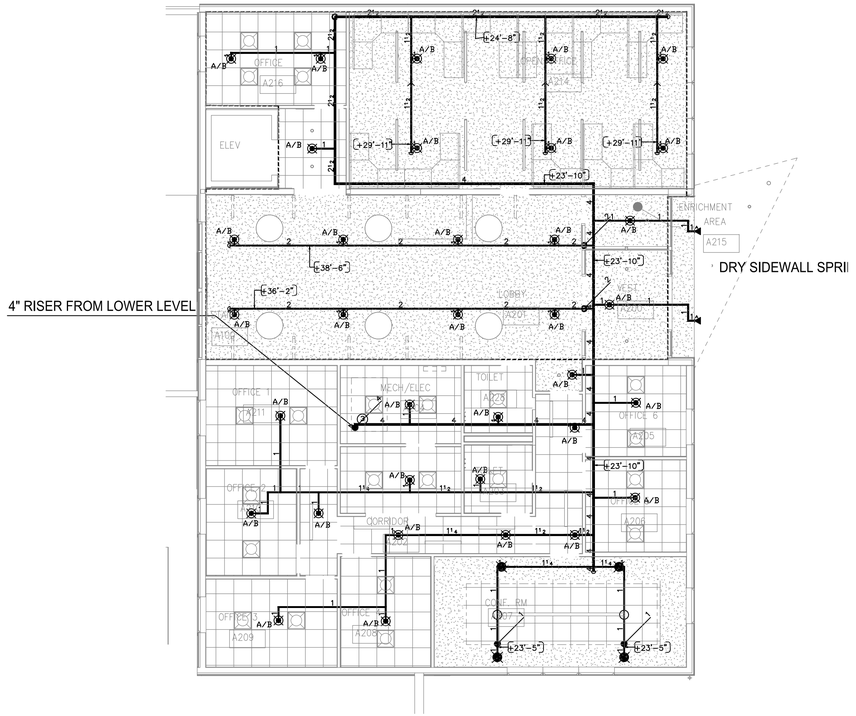

UPPER LEVEL FLOOR PLAN

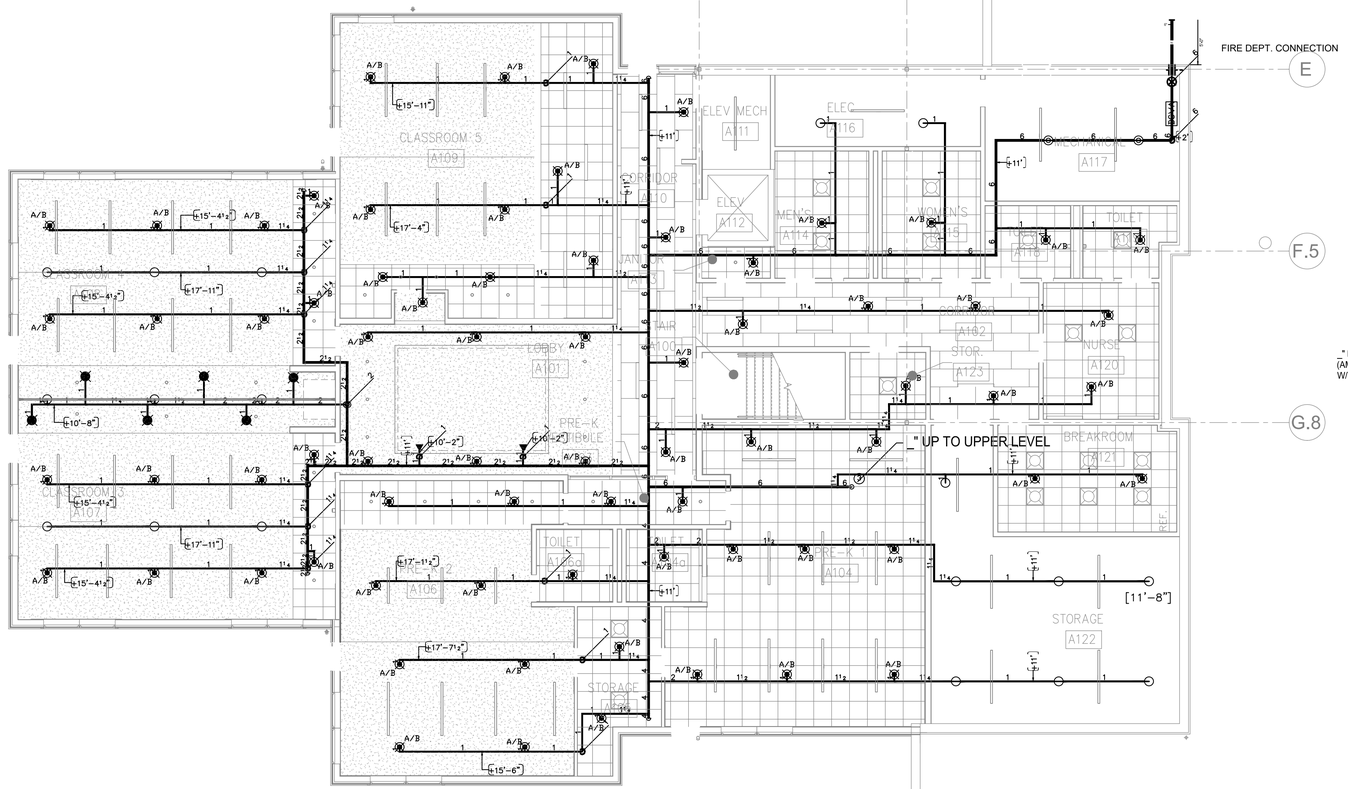

1 A-FP1.0 LOWER LEVEL FLOOR PLAN

1/8" = 1'-0"

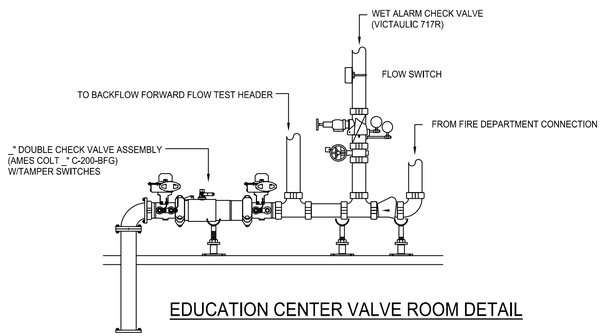

EDUCATION CENTER VALVE ROOM DETAIL

DUCTILE IRON FIRE SPRINNKLER SERVICE

SCALE: 1/8" = 1'-0"

8 4 0 FEET 8 16

FINISHED FLOOR ELEVATION = 35.00'

ARCHITECTS

Saccoccio & Associates, Inc.

1085 Park Avenue
Cranston, Rhode Island
02910

tel 401.942.7970
fax 401.942.7975

Consultant

ENGINEERING DESIGN SERVICES INCORPORATED

ROGER WILLIAMS PARK ZOO

100 ELMWOOD AVENUE
PROVIDENCE, RI 02907

Education Center, Animal Building, & Pavilion

Revision Schedule	
Revision Number	Revision Date

Issued for Bid
08/19/2024

SHEET TITLE

FIRE PROTECTION EDUCATION CENTER

DRAWN BY:	DDL	JOB NUMBER:	18050
CHECKED BY:	GGM	DATE:	08/19/2024

A-FP1.0

SHEET: OF:

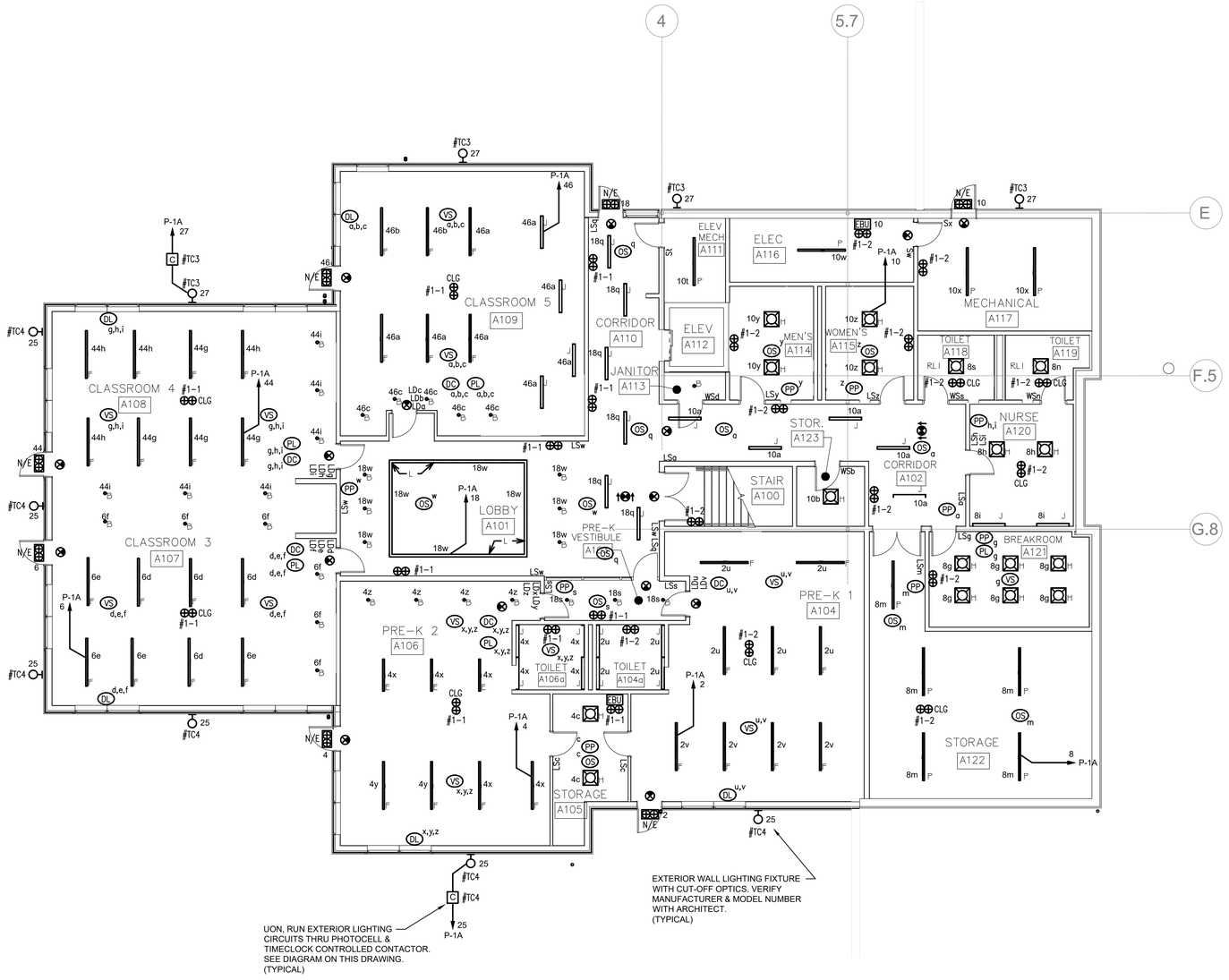

GENERAL NOTE:

REFER TO ARCHITECT'S PLANS AND SPECIFICATIONS FOR LIGHTING FIXTURE TYPES AND MAKE / MODEL NUMBERS. (TYPICAL)

1 / E1-1 LOWER LEVEL FLOOR PLAN - LIGHTING

1/8" = 1'-0"

ARCHITECTS

Saccoccio & Associates, Inc.

1085 Park Avenue
Cranston, Rhode Island
02910

tel 401.942.7970
fax 401.942.7975

Consultant

ENGINEERING DESIGN SERVICES INCORPORATED

Education Center, Animal Building, & Pavilion

ROGER WILLIAMS PARK ZOO

100 ELMWOOD AVENUE
PROVIDENCE, RI 02907

Revision Schedule	
Revision Number	Revision Date

Issued for Bid
08/19/2024

SHEET TITLE

ELECTRICAL EDUCATION CENTER LOWER LEVEL FLOOR PLAN - LIGHTING

DRAWN BY:	SPC	JOB NUMBER:	18050
CHECKED BY:	RWD	DATE:	08/19/2024

A-E1.1

SHEET: OF:

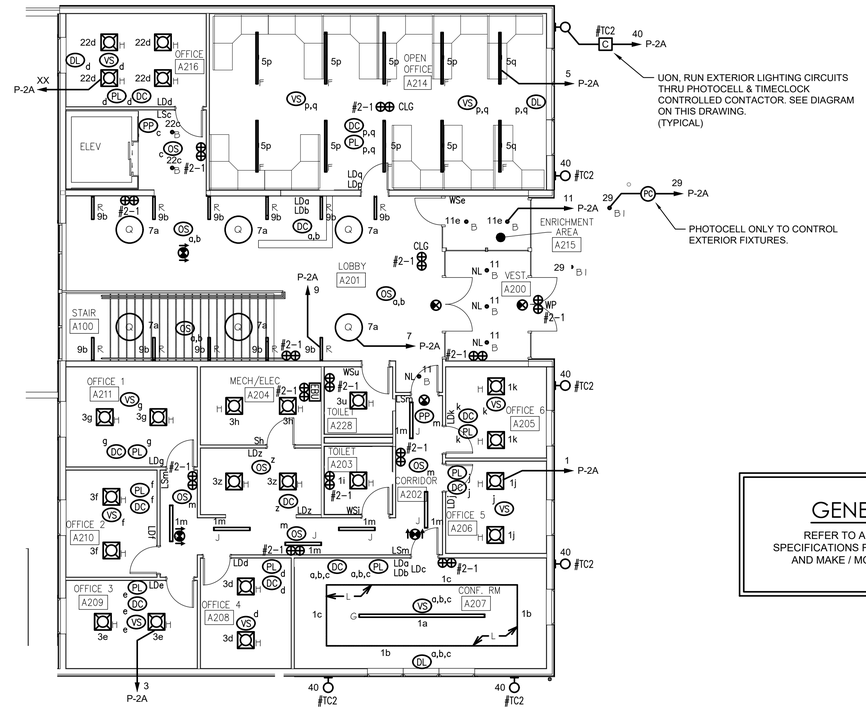

1 E1-2 UPPER LEVEL FLOOR PLAN - LIGHTING

1/8" = 1'-0"

GENERAL NOTE:

REFER TO ARCHITECT'S PLANS AND SPECIFICATIONS FOR LIGHTING FIXTURE TYPES AND MAKE / MODEL NUMBERS. (TYPICAL)

ARCHITECTS

Saccoccio & Associates, Inc.

1085 Park Avenue
Cranston, Rhode Island
02910

tel 401.942.7970
fax 401.942.7975

Consultant

ENGINEERING DESIGN SERVICES INCORPORATED

Education Center, Animal Building, & Pavilion

ROGER WILLIAMS PARK ZOO

100 ELMWOOD AVENUE
PROVIDENCE, RI 02907

Revision Schedule	
Revision Number	Revision Date

Issued for Bid
08/19/2024

SHEET TITLE

ELECTRICAL EDUCATION CENTER UPPER LEVEL FLOOR PLAN - LIGHTING

DRAWN BY:	SPC	JOB NUMBER:	18050
CHECKED BY:	RWD	DATE:	08/19/2024

A-E1.2

SHEET: OF:

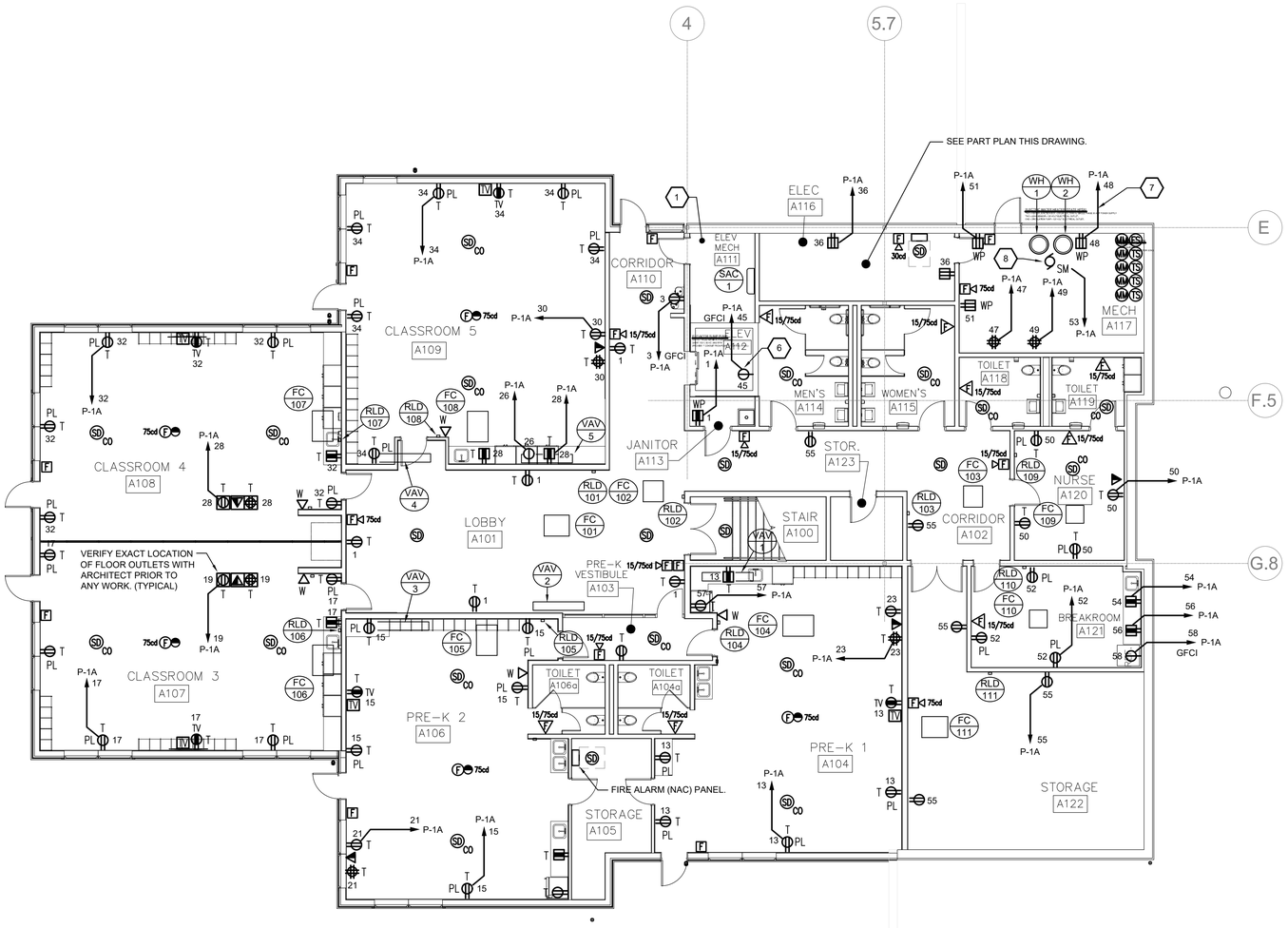

1 E2-1 — LOWER LEVEL FLOOR PLAN - POWER & SIGNAL

1/8" = 1'-0"

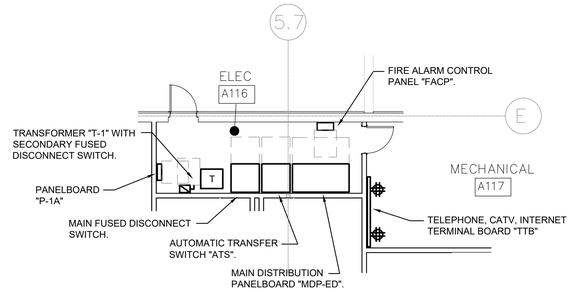

2 E2-1 — PART PLAN - ELEC A116

1/8" = 1'-0"

XX / # — MECHANICAL EQUIPMENT CONNECTION TAG:
REFER TO "MECHANICAL EQUIPMENT ELECTRICAL CONNECTION SCHEDULE" ON DRAWING E0.5 FOR ALL CIRCUITING INFORMATION, INCLUDING BUT NOT LIMITED TO BRANCH CIRCUITING WIRING AND CONDUIT SIZE, VOLTAGE, PHASE, MOTOR CONTROL, DISC. SWITCH & CIRCUIT BREAKER.

SHEET KEYED NOTES:

1. REFER TO DRAWING E2-4 FOR ELEVATOR ELECTRICAL AND FIRE ALARM REQUIREMENTS.
2. PROVIDE A MOTOR-RATED TOGGLE SWITCH IN WEATHER-PROOF ENCLOSURE & 120VAC CIRCUIT FOR DISHWASHER. LOCATE SWITCH IN CABINET UNDER SINK. ALL WIRING SHALL BE IN EMT CONDUIT. PROVIDE LABEL ON SWITCH "DISHWASHER".
3. DELETED
4. DELETED
5. DELETED
6. PROVIDE A SINGLE RECEPTACLE & DEDICATED 120V CIRCUIT CONNECTED TO A GFCI TYPE CIRCUIT BREAKER FOR SUMP PUMP BEING PROVIDED BY P.C. IN ADDITION, PROVIDE A 1" CONDUIT WITH PULL STRING FROM SUMP PUMP TO SUMP CONTROL PANEL. VERIFY EXACT LOCATIONS WITH P.C. PRIOR TO ANY WORK.
7. GFCI RECEPTACLE & DEDICATED CIRCUIT FOR LEAK SENSORS. VERIFY EXACT LOCATION WITH P.C. PRIOR TO ANY WORK.
8. MOTOR RATED TOGGLE SWITCH / STARTER WITH THERMAL OVERLOADS & DEDICATED CIRCUIT FOR CIRCULATOR PUMP. VERIFY EXACT LOCATION WITH P.C. PRIOR TO ANY WORK.

ARCHITECTS
Saccoccio & Associates, Inc.
1085 Park Avenue
Cranston, Rhode Island
02910
tel 401.942.7970
fax 401.942.7975
Consultant
ENGINEERING DESIGN SERVICES INCORPORATED

Education Center, Animal Building, & Pavilion

ROGER WILLIAMS PARK ZOO
100 ELMWOOD AVENUE
PROVIDENCE, RI 02907

Revision Schedule	
Revision Number	Revision Date

Issued for Bid
08/19/2024

SHEET TITLE
ELECTRICAL EDUCATION CENTER LOWER LEVEL FLOOR PLAN - POWER & SIGNAL

DRAWN BY:	SPC	JOB NUMBER:	18050
CHECKED BY:	RWD	DATE:	08/19/2024

A-E2.1

SHEET: OF:

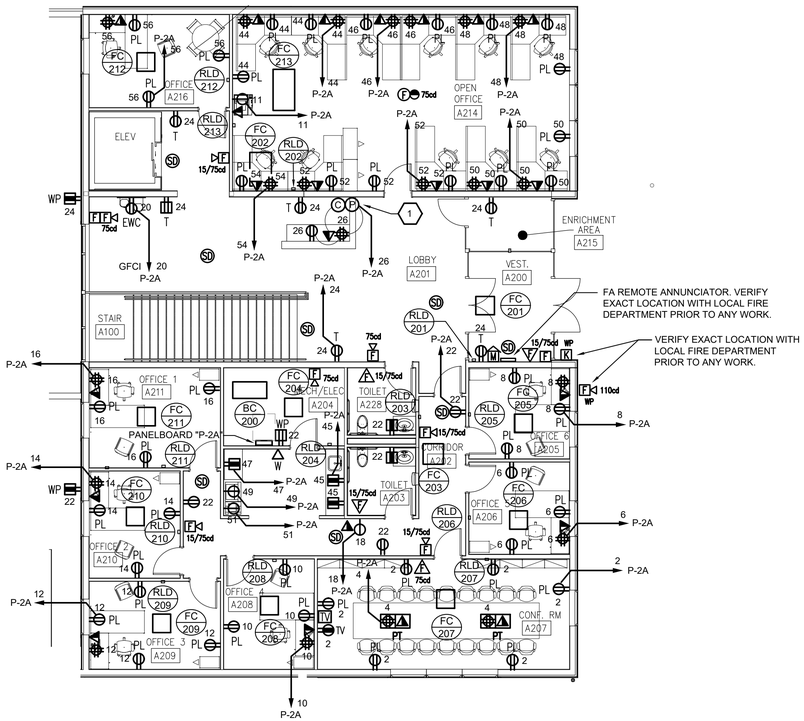

1 E2-2 UPPER LEVEL FLOOR PLAN - POWER & SIGNAL

1/8" = 1'-0"

XX / # MECHANICAL EQUIPMENT CONNECTION TAG:

REFER TO "MECHANICAL EQUIPMENT ELECTRICAL CONNECTION SCHEDULE" ON DRAWING E0.5 FOR ALL CIRCUITING INFORMATION, INCLUDING BUT NOT LIMITED TO BRANCH CIRCUITING WIRING AND CONDUIT SIZE, VOLTAGE, PHASE, MOTOR CONTROL, DISC. SWITCH & CIRCUIT BREAKER.

SHEET KEYED NOTES:

1 PROVIDE POWER & TELE/DATA OUTLETS IN MILLWORK FED FROM ADJACENT WALL. ALL CONDUIT & WIRING SHALL BE CONCEALED FROM PUBLIC VIEW. COORDINATE & VERIFY EXACT INSTALLATION REQUIREMENTS WITH ARCHITECT & MILLWORK CONTRACTOR PRIOR TO ANY WORK. (TYPICAL)

ARCHITECTS

Saccoccio & Associates, Inc.

1085 Park Avenue
Cranston, Rhode Island
02910

tel 401.942.7970
fax 401.942.7975

Consultant

ENGINEERING DESIGN SERVICES INCORPORATED

Education Center, Animal Building, & Pavilion

ROGER WILLIAMS PARK ZOO

100 ELMWOOD AVENUE
PROVIDENCE, RI 02907

Revision Schedule	
Revision Number	Revision Date

Issued for Bid
08/19/2024

SHEET TITLE

ELECTRICAL EDUCATION CENTER UPPER LEVEL FLOOR PLAN - POWER & SIGNAL

DRAWN BY:	SPC	JOB NUMBER:	18050
CHECKED BY:	RWD	DATE:	08/19/2024

A-E2.2

SHEET: OF:

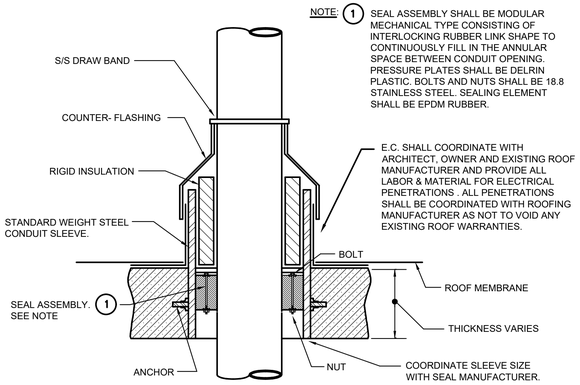

CONDUIT THRU ROOF DETAIL

NOT TO SCALE

NOTES:

1. CONTRACTOR SHALL PROVIDE A NEW GFCI RECEPTACLE MOUNTED TO THE OUTSIDE OF EACH ROOF TOP UNIT, AS DESCRIBED IN SECTION 210.63 OF THE NATIONAL ELECTRICAL CODE, 2011 EDITION.
2. IN ADDITION TO THIS SECTION THE CONTRACTOR SHALL PROVIDE A SUITABLE WEATHER-PROOF TOGGLE SWITCH TO CUT ALL POWER TO THE NEW GFCI RECEPTACLE.
3. CONTRACTOR SHALL PROVIDE CIRCUITRY FOR GFCI RECEPTACLE AND LIGHT FIXTURE CONSISTING OF 2#12 + GND. IN 3/4" CONDUIT AND/OR MC (WHERE CONCEALED) FROM SWITCH FROM PANEL AS INDICATED. FIELD VERIFY EXACT ROUTING, LOCATION AND LENGTH OF CIRCUITRY. (TYPICAL)

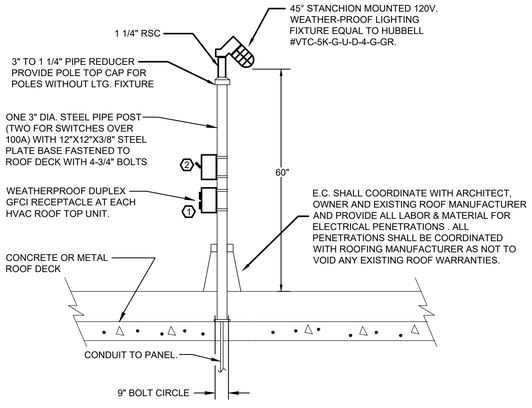

ROOF LIGHTING & RECEPTACLE DETAIL

NOT TO SCALE

XX / # MECHANICAL EQUIPMENT CONNECTION TAG:

REFER TO "MECHANICAL EQUIPMENT ELECTRICAL CONNECTION SCHEDULE" ON DRAWING E0.5 FOR ALL CIRCUITING INFORMATION, INCLUDING BUT NOT LIMITED TO BRANCH CIRCUITING WIRING AND CONDUIT SIZE, VOLTAGE, PHASE, MOTOR CONTROL, DISC. SWITCH & CIRCUIT BREAKER.

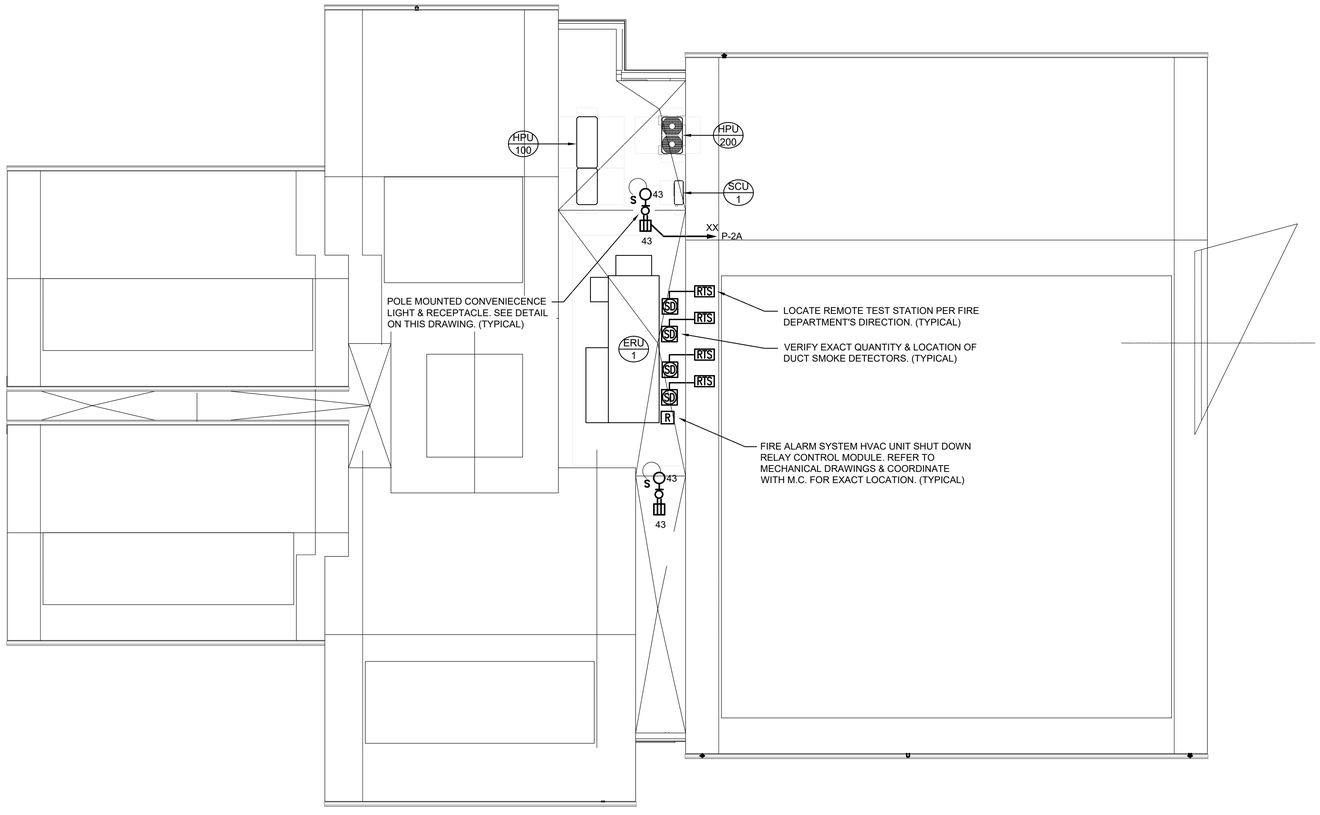

1 / E2-3 ROOF PLAN - ELECTRICAL

1/8" = 1'-0"

ARCHITECTS
Saccoccio & Associates, Inc.
1085 Park Avenue
Cranston, Rhode Island
02910
tel 401.942.7970
fax 401.942.7975
Consultant

ENGINEERING DESIGN SERVICES INCORPORATED
141 Kingstown Road Suite 300 West Kingston, RI 02892
Tel (401) 765-7439 Fax (401) 765-2964

Education Center, Animal Building, & Pavilion

ROGER WILLIAMS PARK ZOO
100 ELMWOOD AVENUE
PROVIDENCE, RI 02907

Revision Schedule	
Revision Number	Revision Date

Issued for Bid
08/19/2024

SHEET TITLE

ELECTRICAL EDUCATION CENTER ROOF PLAN

DRAWN BY:	SPC	JOB NUMBER:	18050
CHECKED BY:	RWD	DATE:	08/19/2024

A-E2.3

SHEET: OF:

ELEVATOR MACHINE ROOM NOTES

1. FUSED DISCONNECT SWITCH WITH 120 VOLT CIRCUIT FOR CAB LIGHTS, FUSE SHALL BE 15 AMP. CONNECT CAB LIGHTING TO THE LINE SIDE OF THE MACHINE ROOM GFCI RECEPTACLE.
2. PROVIDE (1) JUNCTION BOX IN ELEVATOR MACHINE ROOM WITH 3/4" EMT CONDUIT TO TELEPHONE BACKBOARD FOR EACH ELEVATOR FOR CAB TELEPHONE. CONDUITS SHALL INCLUDE PULL STRING.
3. PROVIDE (1) JUNCTION BOX IN ELEVATOR MACHINE ROOM WITH 3/4" EMT CONDUIT & (4) #14 AWG FOR EACH ELEVATOR TO FIRE ALARM CONTROL PANEL FOR ELEVATOR CAPTURE.
4. PROVIDE 120 VOLT., 20 AMP CIRCUIT TO ELEVATOR CONTROLLER.
5. PROVIDE 120 VOLT., 20 AMP CIRCUIT FOR OIL HEATER.
6. PROVIDE (1) JUNCTION BOX WITH 3/4"C. TO TELEPHONE TERMINAL BOARD FOR EACH ELEVATOR FOR OFF SITE TELEPHONE MONITORING.
7. PROVIDE (1) JUNCTION BOX WITH 3/4"C. TO TELEPHONE TERMINAL BOARD FOR EACH ELEVATOR FOR INTERCOM.
8. E.C. SHALL PROVIDE A SET OF AUXILIARY CONTACTS WITH THE ELEVATOR DISCONNECT SWITCH AND WIRING TO THE ELEVATOR CONTROLLER, PER ANSI/NFPA 70-1996, SECTION 620-91(c). THE AUXILIARY CONTACTS SHALL BE POSITIVELY OPEN WHEN THE DISCONNECT SWITCH IS OPEN. THE AUXILIARY CONTACTS SHALL CAUSE THE EMERGENCY RETURN UNIT POWER SOURCE TO BE DISCONNECTED FROM ITS LOAD WHEN THE DISCONNECTING MEANS IS IN THE OPEN POSITION.
9. E.C. SHALL PROVIDE WITH HEAT DETECTORS (USED TO AUTOMATICALLY DISCONNECT THE MAIN LINE POWER SUPPLY TO THE ELEVATOR PRIOR TO THE APPLICATION OF WATER FROM SPRINKLERS) A SET OF NORMALLY CLOSED CONTACTS WITH WIRING FROM THE HEAT DETECTOR TO A SHUNT TRIP CIRCUIT BREAKER IN THE PANEL SUPPLYING POWER TO THE ELEVATOR. THE NORMALLY CLOSED CONTACTS SHALL BE CLOSED WHEN THE HEAT DETECTOR IS NOT ACTIVATED AND SHALL BE OPENED WHEN THE HEAT DETECTOR IS ACTIVATED.
10. ALL ELECTRICAL EQUIPMENT, DEVICES, WIRING, RACEWAYS, JUNCTION BOXES, ETC.. FOREIGN TO THE ELEVATOR SHALL NOT BE INSTALLED IN THE ELEVATOR MACHINE ROOM OR HOISTWAY. (TYPICAL)
11. IN HOISTWAYS, ALL ELECTRICAL EQUIPMENT LOCATED LESS THAN 48-INCHES ABOVE THE PIT FLOOR SHALL BE WEATHERPROOF (NEMA 4); AND WIRING SHALL BE IDENTIFIED FOR USE IN WET LOCATIONS IN ACCORDANCE WITH THE REQUIREMENTS IN NFPA 70. (TYPICAL)
12. LIGHTING IN HOISTWAYS SHALL NOT BE CONNECTED TO THE LOAD SIDE OF THE GFCI RECEPTACLE. LOCATE LIGHT FIXTURE TO AVOID BEING STRUCK BY THE ELEVATOR CAR OR COUNTER-WEIGHT. THE SWITCH SHALL BE LOCATED SO AS TO BE READILY ACCESSIBLE FROM THE PIT DOOR.
13. PROVIDE FIRE ALARM SYSTEM CONNECTIONS FOR ELEVATOR CAB "FIRE-FIGHTERS HAT" INDICATOR AS REQUIRED. COORDINATE CONNECTION REQUIREMENTS WITH ELEVATOR AND FIRE ALARM SYSTEM MANUFACTURERS AS REQUIRED.
14. PROVIDE CONTROL MODULES THAT SHALL CAPTURE THE ELEVATOR WHEN THE FIRE ALARM SYSTEM IS ACTIVATED AND THEREFORE BRING THE ELEVATOR CAB TO A PRE-DETERMINED FLOOR & ALTERNATE FLOOR AS REQUIRED. COORDINATE WITH ELEVATOR MANUFACTURER & INSTALLER FOR CONNECTIONS AND PROGRAMMING. COORDINATE WITH FIRE DEPARTMENT & ARCHITECT FOR PRE-DETERMINED FLOOR AND ALTERNATE FLOOR.
15. ELEVATOR SHALL BE PROVIDED WITH A 208V INPUT / 208V OUTPUT ISOLATION TRANSFORMER FOR THE PURPOSES OF REDUCING THE AVAILABLE FAULT CURRENT AHEAD OF THE ELEVATOR EQUIPMENT TO BELOW THE SHORT CIRCUIT CURRENT RATING (SCCR) OF THE ELEVATOR EQUIIPMENT.
16. E.C. SHALL COORDINATE & PROVIDE EMERGENCY STANDBY SYSTEM AUTOMATIC TRANSFER SWITCH (ATS) AND ELEVATOR CONTROLLER INTERFACE IN ACCORDANCE WITH BOTH SYSTEMS MANUFACTURER'S REQUIREMENTS. THE ATS SHALL HAVE TWO SETS OF NORMALLY CLOSED DRY CONTACTS, ONE TO BE OPEN WHEN THE SWITCH IS IN THE EMERGENCY (STANDBY) POSITION, THE OTHER TO OPEN UPON INITIATION OF POWER TRANSFER AND TO CLOSE WHEN TRANSFER IS COMPLETE. SWITCH SHALL HAVE AN INHERENT FUNCTION WHICH WILL DELAY TRANSFER TO NORMAL AND/OR EMERGENCY (STANDBY) POWER BY ADJUSTABLE PERIOD OF 0 - 300 SECONDS. SWITCH SHALL HAVE A PHASE MONITOR FEATURE, WHICH PROHIBITS THE TRANSFER OF POWER BETWEEN "LIVE" SOURCES UNLESS THE SOURCES ARE IN PHASE WITH EACH OTHER. IF A SHUNT-TRIP DEVICE IS PROVIDED, AN ADDITIONAL NORMALLY CLOSED CONTACT, WITH ALL ASSOCIATED WIRING AND CONDUIT TO CONTROLLER, IS REQUIRED FROM EMERGENCY (STANDBY) POWER SOURCE. THE EMERGENCY (STANDBY) POWER SYSTEM PROVIDED SHALL COMPLY WITH ANSI/NFPA 70 REQUIREMENTS 620.91.
17. E.C. SHALL PROVIDE WIRING FROM ANY AND ALL HOISTWAY ACCESS DOORS TO THE CORRESPONDING ELEVATOR CONTROLLER, PER ANSI 2.11.1, ASME A17.1, NFPA 70-SECTION 620 FOR THE PURPOSE OF PREVENTING THE OPERATION OF THE DRIVING MACHINE UNLESS THE ACCESS PANELS OR DOORS ARE CLOSED AND LOCKED. THE E.C. SHALL COORDINATE WITH THE ELEVATOR SUPPLIER AND VERIFY EXACT WIRING AND CONNECTION REQUIREMENTS PRIOR TO ANY WORK.

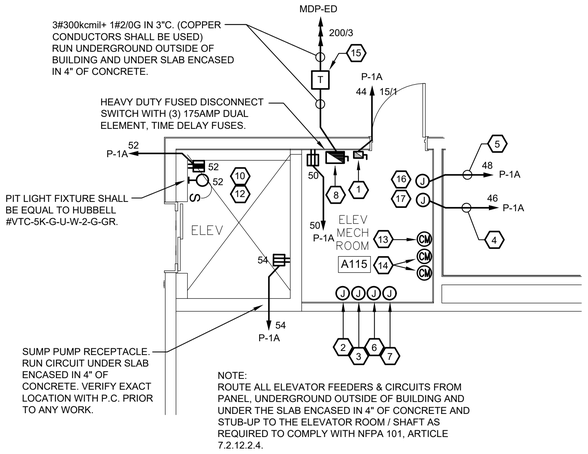

PARTIAL PLAN: ELEVATOR ELECTRICAL

SCALE: 1/4" = 1'-0"

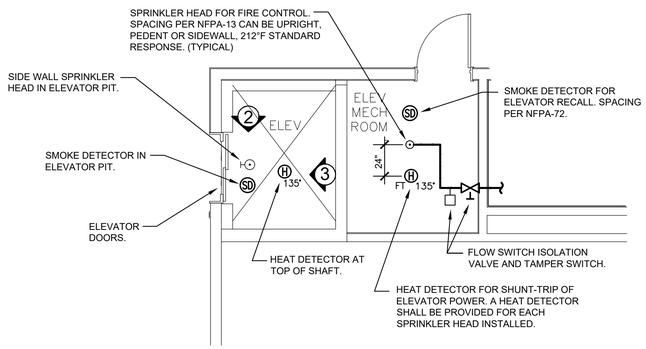

PLAN VIEW

NOT TO SCALE

ELEVATOR/FIRE ALARM SEQUENCE OF OPERATION

THE FLOW-SWITCH ISOLATION VALVE, SMOKE DETECTOR AND HEAT DETECTOR ASSOCIATED WITH THE ELEVATOR MACHINE ROOM SHALL BE WIRED AS REQUIRED PER THE FIRE ALARM MANUFACTURERS RECOMMENDATIONS TO HAVE THE FOLLOWING SEQUENCE OF OPERATION:

1. THE SMOKE DETECTOR SHALL CAPTURE THE ELEVATOR WHEN THE FIRE ALARM SYSTEM IS ACTIVATED AND THEREFORE BRING THE ELEVATOR TO A PREDETERMINED FLOOR OR ALTERNATE FLOOR AS REQUIRED (COORDINATE WITH ELEVATOR MANUFACTURER & INSTALLER).
2. IF THE HEAT DETECTOR IN THE ELEVATOR MACHINE ROOM IS ACTIVATED THEN THE FOLLOWING SHALL BE REQUIRED:

   a) THE REQUIREMENTS OF NOTE 1 ABOVE.

   b) THE HEAT DETECTOR SHALL BE WIRED TO CAUSE THE TERMINATION OF POWER TO THE LINE SIDE OF THE ELEVATOR DISCONNECT SWITCH. THE DISCONNECT SWITCH SHALL BE INDEPENDENT OF THE ELEVATOR CONTROLS AND NOT BE SELF-RESETTING.

   c) ONCE THE REQUIREMENTS OF "a" AND "b" DESCRIBED ABOVE ARE COMPLETED AND , THE ELEVATOR DOORS ARE OPEN AT THE PREDETERMINED FLOOR, A RELAY WITHIN THE FACP STARTS TIMING FOR APPROXIMATELY 30 SECONDS (EXACT TIME TO BE FIELD VERIFIED WITH LOCAL AUTHORITY HAVING JURISDICTION). UPON THE ELAPSING OF THE 30 SECONDS THE FLOW-SWITCH ISOLATION VALVE SHALL BE TRANSFERRED TO ALLOW THE FLOW OF WATER WITHIN THE ELEVATOR MACHINE ROOM.

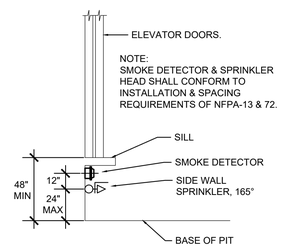

2 SECTION VIEW

NOT TO SCALE

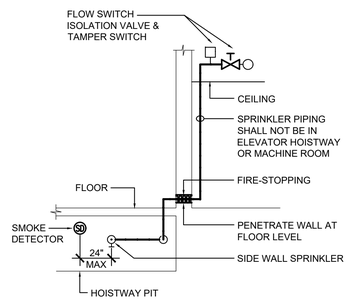

3 SECTION VIEW

NOT TO SCALE

TYPICAL ELEVATOR MACHINE RM & PIT

NOT TO SCALE

ARCHITECTS

Saccoccio & Associates, Inc.

1085 Park Avenue
Cranston, Rhode Island
02910

tel 401.942.7970
fax 401.942.7975

Consultant

ENGINEERING DESIGN SERVICES INCORPORATED
149 Pippin Orchard Drive, East Greenwich, RI 02818
Tel (401) 765-7939 Fax (401) 765-2964

Education Center, Animal Building, & Pavilion

ROGER WILLIAMS PARK ZOO

100 ELMWOOD AVENUE
PROVIDENCE, RI 02907

Revision Schedule	
Revision Number	Revision Date

Issued for Bid
08/19/2024

SHEET TITLE

ELECTRICAL EDUCATION CENTER ELEVATOR PART PLAN & NOTES

DRAWN BY:	SPC	JOB NUMBER:	18050
CHECKED BY:	RWD	DATE:	08/19/2024

A-E2.4

SHEET: OF:

GENERAL NOTE:
- THE ARCHITECTURAL FOUNDATION PLAN IS FOR DIMENSIONS & ARCHITECTURAL DETAILING ONLY. SEE PRE-ENGINEERED BUILDING MANUFACTURERED DRAWINGS

GENERAL NOTE:
- BUILDING 'B' (PAVILION IS TO BE A PRE-ENGINEERED WOOD BUILDING - SEE SPECIFICATIONS. GC IS TO PROVIDE FINAL DESIGN & INSTALLATION OF BUILDING 'B' BASED ON THE DRAWINGS AND SPECIFICATIONS. ALL FIXTURES, EQUIPMENT, COMPONENTS, FINISHES & UTILITIES SHOWN ON THE DRAWINGS THAT ARE NOT PROVIDED BY THE PRE-ENGINEERED BUILDING MANUFACTURER ARE TO BE PROVIDED AND INSTALLED BY THE GC.

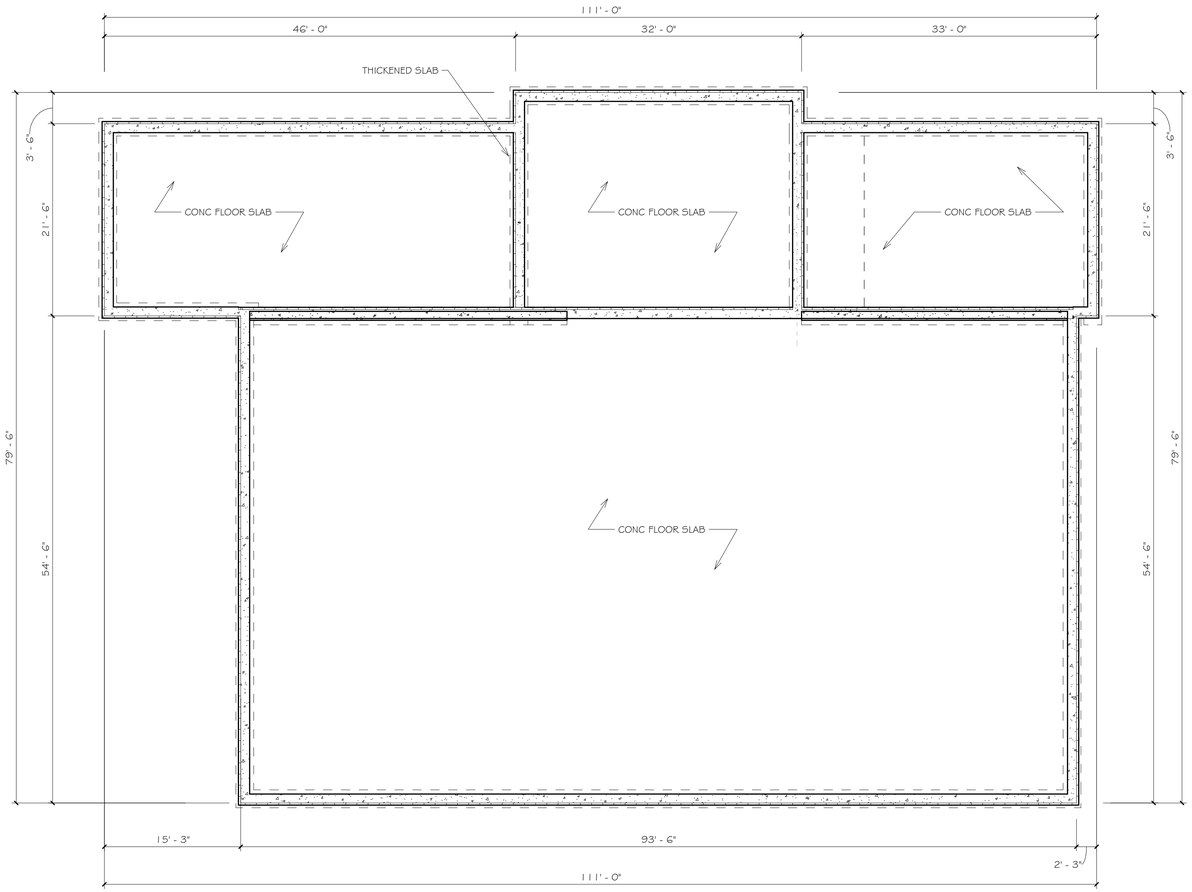

1 B-A1.0 FOUNDATION PLAN

1/8" = 1'-0"

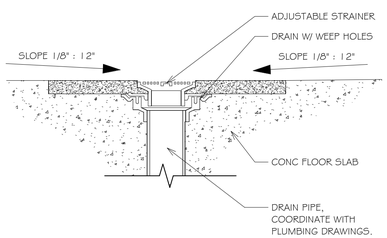

2 B-A1.0 TYPICAL FLOOR DRAIN DETAIL

3" = 1'-0"

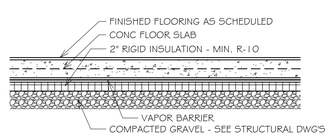

3 B-A1.0 UNDERSLAB INSULATION DETAIL

3/4" = 1'-0"

ARCHITECTS

Saccoccio & Associates, Inc.
1085 Park Avenue
Cranston, Rhode Island
02910
tel 401.942.7970
fax 401.942.7975

Consultant

ROGER WILLIAMS PARK ZOO PAVILION

ROGER WILLIAMS PARK ZOO

1000 ELMWOOD AVENUE,
PROVIDENCE, RI 02907

Revision Schedule	
Revision Number	Revision Date

ISSUED FOR BID
AUGUST 19, 2024

SHEET TITLE

FOUNDATION PLAN

DRAWN BY:	KR	JOB NUMBER:	18050
CHECKED BY:	MS	DATE:	8-19-2024

B-A1.0

SHEET: OF:

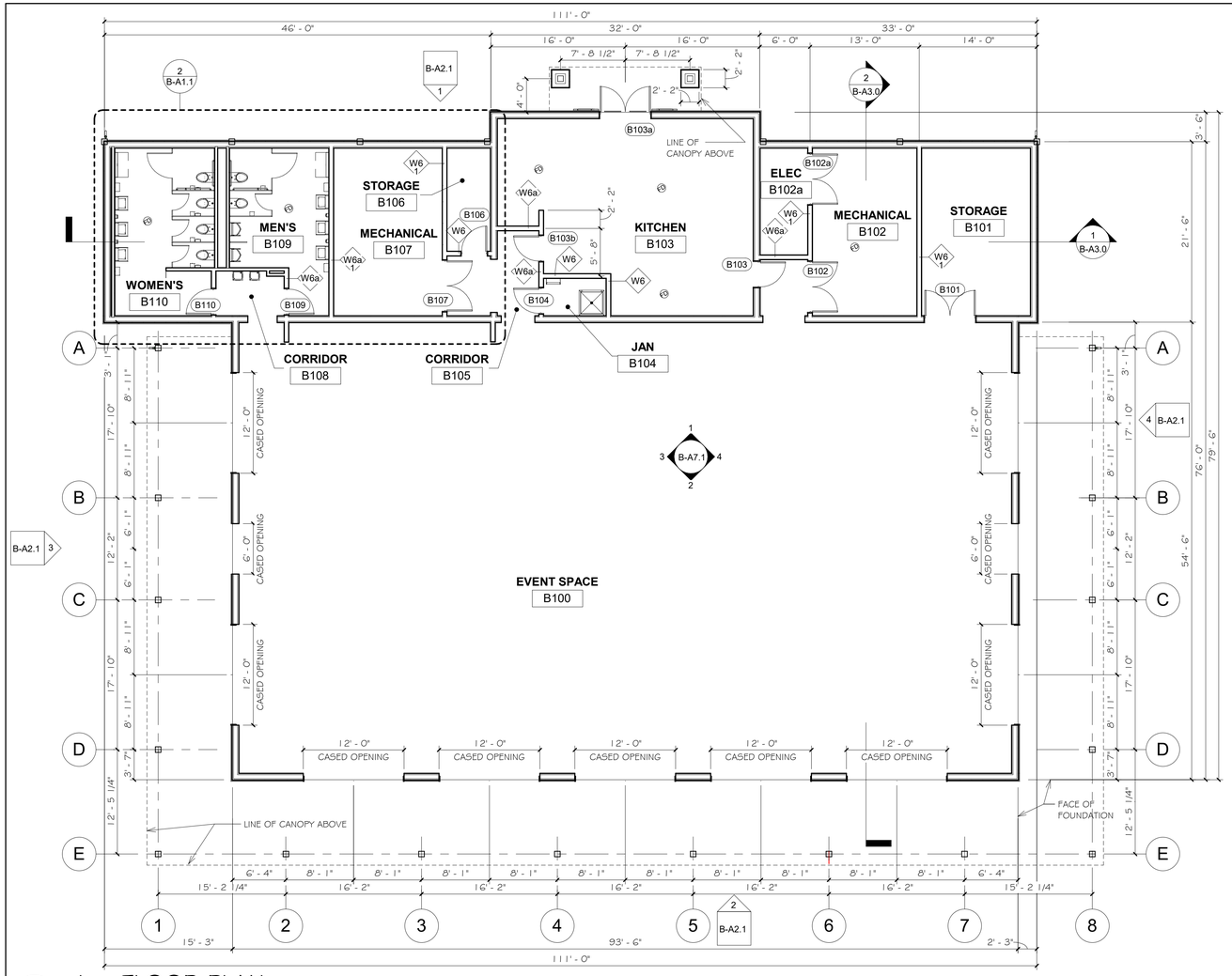

1st FLOOR PLAN

1/8" = 1'-0"

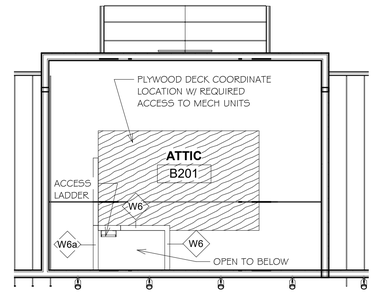

NOTE:
WALLS TO EXTEND 3'-0" ABOVE ATTIC FLOOR

2nd FLOOR PLAN

1/8" = 1'-0"

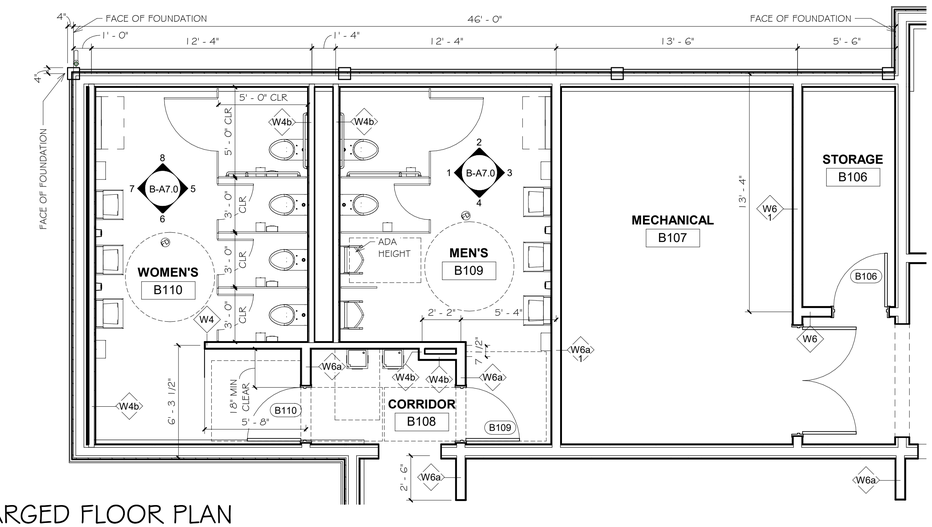

ENLARGED FLOOR PLAN

1/4" = 1'-0"

ARCHITECTS

Saccoccio & Associates, Inc.

1085 Park Avenue
Cranston, Rhode Island
02910

tel 401.942.7970
fax 401.942.7975

Consultant

ROGER WILLIAMS PARK ZOO PAVILION

ROGER WILLIAMS PARK ZOO

1000 ELMWOOD AVENUE,
PROVIDENCE, RI 02907

Revision Schedule	
Revision Number	Revision Date

ISSUED FOR BID
AUGUST 19, 2024

SHEET TITLE

1st FLOOR PLAN

DRAWN BY:	KC	JOB NUMBER:	18050
CHECKED BY:	MS	DATE:	8-19-2024

B-A1.1

SHEET: OF:

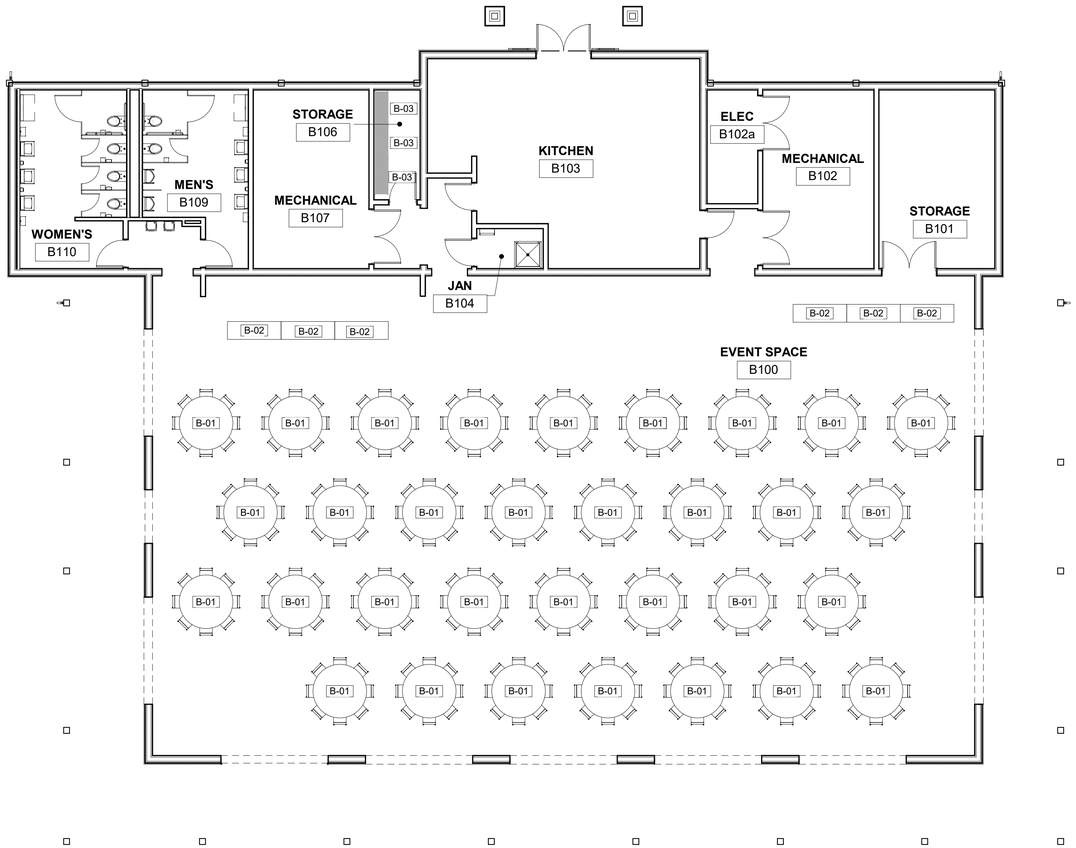

1 B-A1.2

FURNITURE PLAN

1/8" = 1'-0"

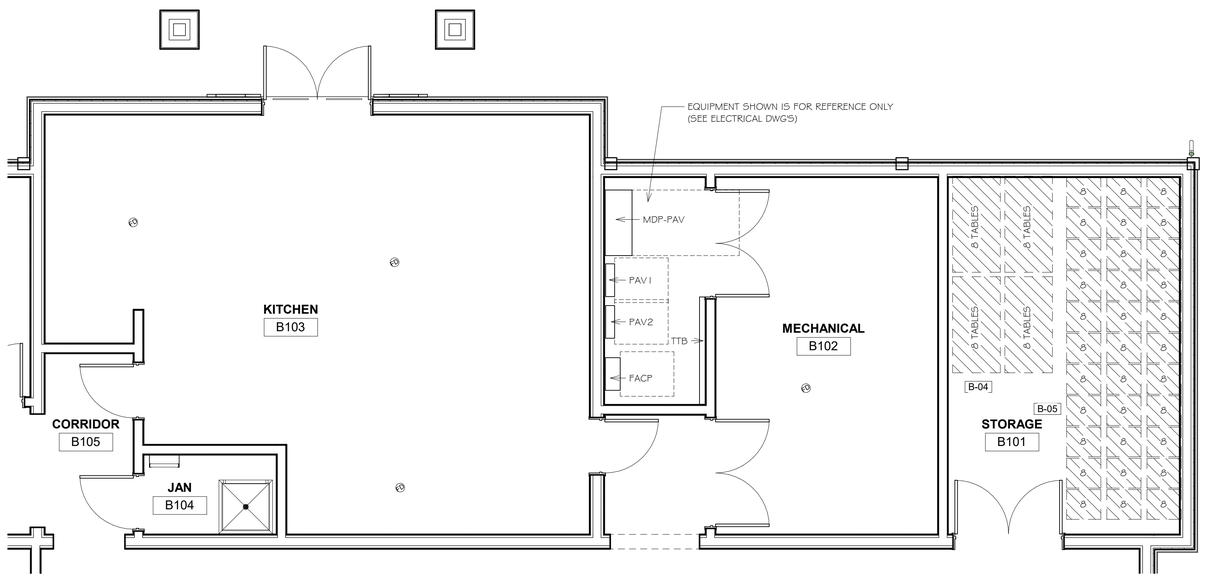

2 B-A1.2

ENLARGED KITCHEN & MECHANICAL ROOM

1/4" = 1'-0"

FURNITURE & EQUIPMENT SCHEDULE

KEYNOTE	DESCRIPTION	FURNISHED BY	INSTALLED BY	FUNDED BY	COMMENTS
B-01	TABLE & CHAIRS	OWNER	GC	ALLOWANCE	
B-02	SERVING TABLES	OWNER	GC	ALLOWANCE	
B-03	WIRE SHELVES (24"x48")	OWNER	GC	ALLOWANCE	

ARCHITECTS

Saccoccio & Associates, Inc.

1085 Park Avenue
Cranston, Rhode Island
02910

tel 401.942.7970
fax 401.942.7975

Consultant

ROGER WILLIAMS PARK ZOO PAVILION

ROGER WILLIAMS PARK ZOO

1000 ELMWOOD AVENUE,
PROVIDENCE, RI 02907

Revision Schedule	
Revision Number	Revision Date

ISSUED FOR BID
AUGUST 19, 2024

SHEET TITLE

FURNITURE PLAN

DRAWN BY:	KR	JOB NUMBER:	18050
CHECKED BY:	MS	DATE:	8-19-2024

B-A1.2

SHEET: OF:

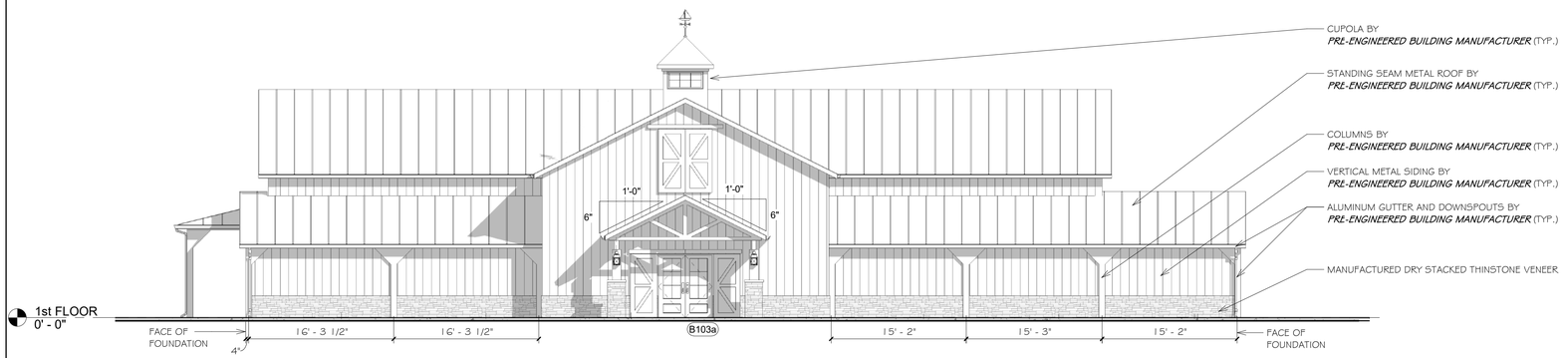

1 / B-A2.1 NORTH ELEVATION

1/8" = 1'-0"

EXTERIOR ELEVATION NOTES

1. PROVIDE PLINTH BLOCKS BEHIND ALL EXTERIOR LIGHTING, VENTS, LOUVERS, PIPES AND OTHER PENETRATIONS THROUGH THE EXTERIOR WALLS. SEE TYPICAL PLINTH BLOCK DETAILS.
2. FIRST FLOOR REFERENCE ELEVATION 2' - 0" = SURVEY ELEVATION 34'-3"
3. REFER TO OTHER SHEETS FOR WINDOW AND DOOR SCHEDULES AND DETAILS.
4. PROVIDE A CONTROL JOINT AT ALL MASONRY REENTRANT CORNERS.
5. COORDINATE FINAL LOCATIONS OF EXTERIOR HVAC UNITS, LOUVERS AND VENTS WITH ARCHITECT PRIOR TO ROUGH-IN INSTALLATION.

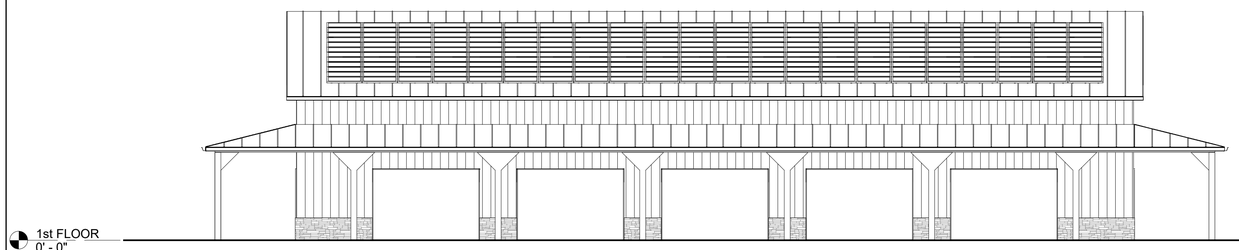

2 / B-A2.1 SOUTH ELEVATION

1/8" = 1'-0"

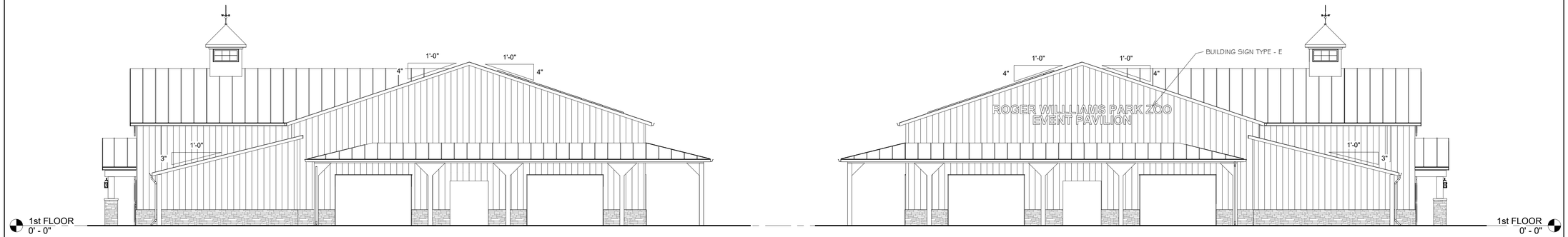

3 / B-A2.1 EAST ELEVATION

1/8" = 1'-0"

4 / B-A2.1 WEST ELEVATION

1/8" = 1'-0"

SZ ARCHITECTS

Saccoccio & Associates, Inc.

1085 Park Avenue
Cranston, Rhode Island
02910

tel 401.942.7970
fax 401.942.7975

Consultant

ROGER WILLIAMS PARK ZOO

1000 ELMWOOD AVENUE,
PROVIDENCE, RI 02907

Revision Schedule	
Revision Number	Revision Date

ISSUED FOR BID
AUGUST 19, 2024

ROGER WILLIAMS PARK ZOO PAVILION

SHEET TITLE

EXTERIOR ELEVATIONS

DRAWN BY:	KC	JOB NUMBER:	18050
CHECKED BY:	MS	DATE:	8-19-2024

B-A2.1

SHEET: OF:

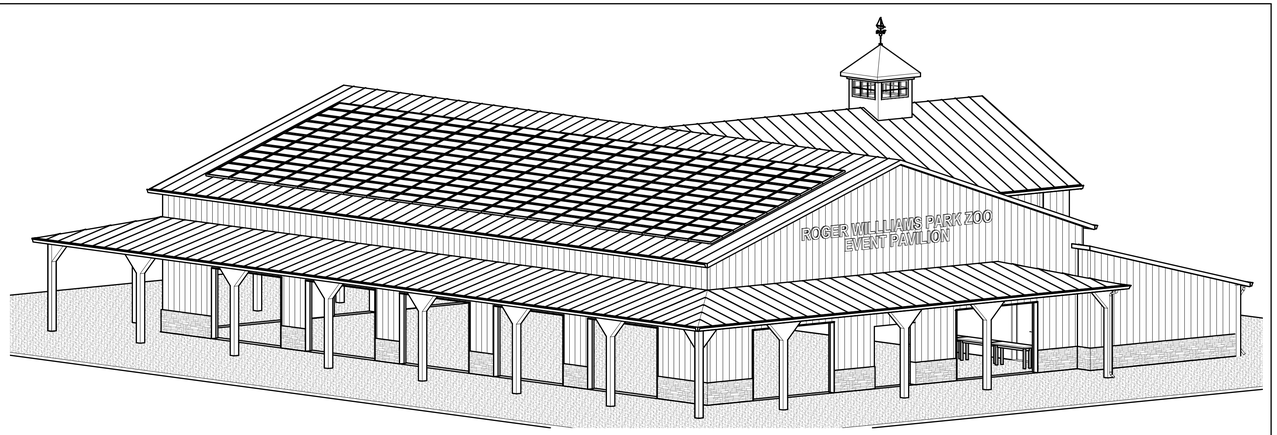

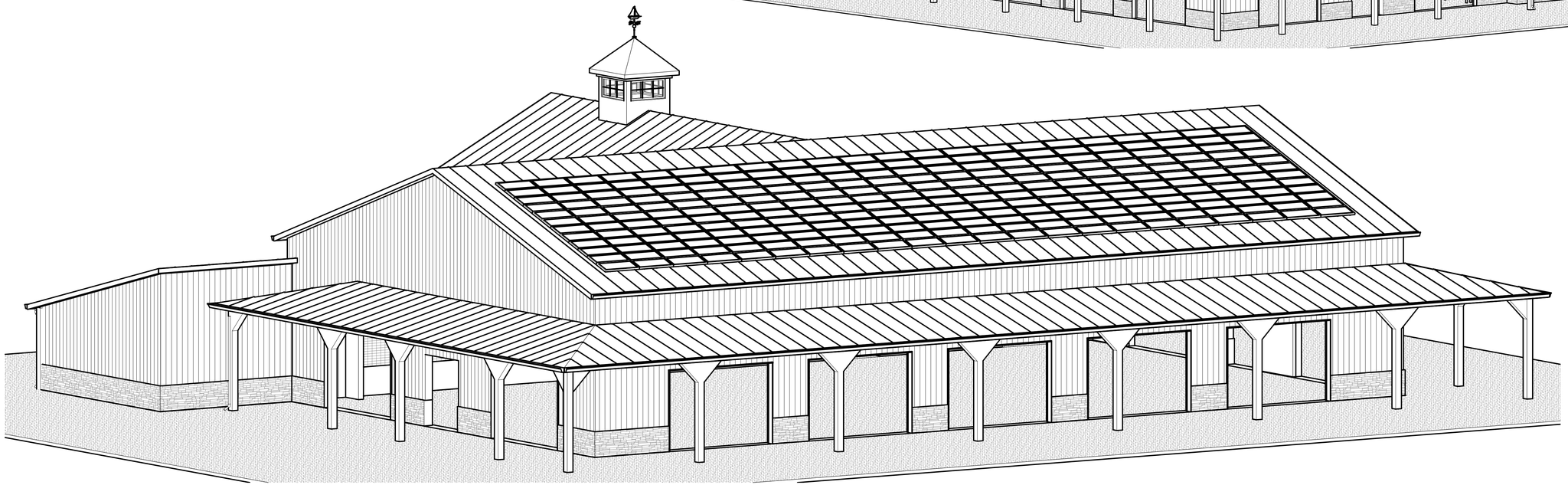

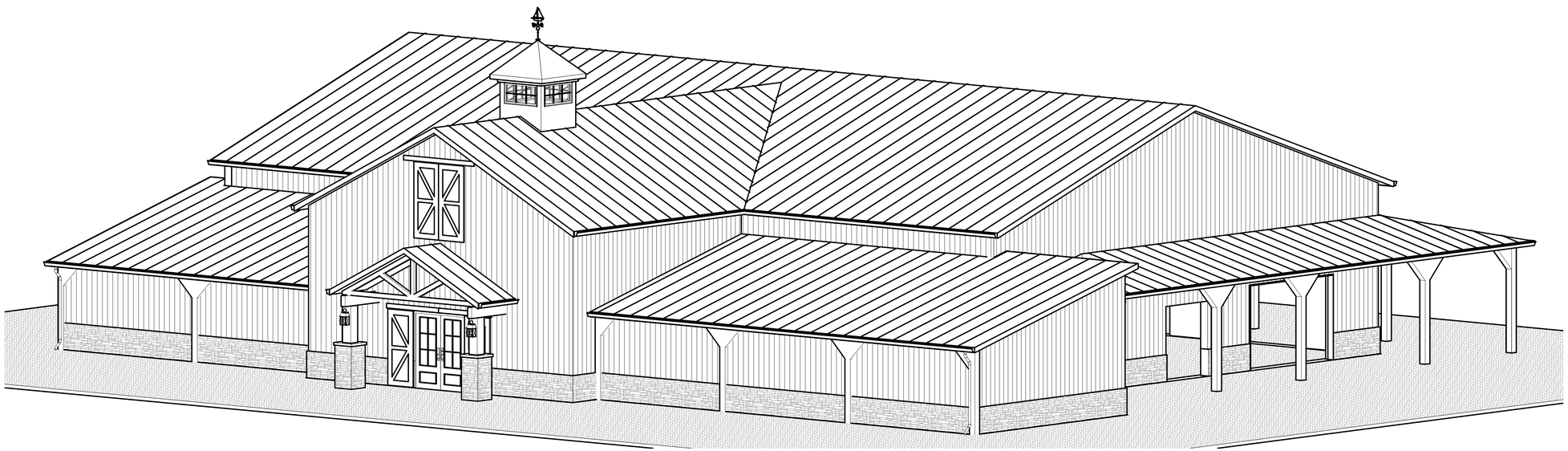

ARCHITECTS

Saccoccio & Associates, Inc.

1085 Park Avenue
Cranston, Rhode Island
02910

tel 401.942.7970
fax 401.942.7975

Consultant

ROGER WILLIAMS PARK ZOO PAVILION

ROGER WILLIAMS PARK ZOO

1000 ELMWOOD AVENUE,
PROVIDENCE, RI 02907

Revision Schedule	
Revision Number	Revision Date

ISSUED FOR BID
AUGUST 19, 2024

SHEET TITLE

3D Views

DRAWN BY:	JP	JOB NUMBER:	18050
CHECKED BY:	MS	DATE:	8-19-2024

B-A2.2

SHEET: OF:

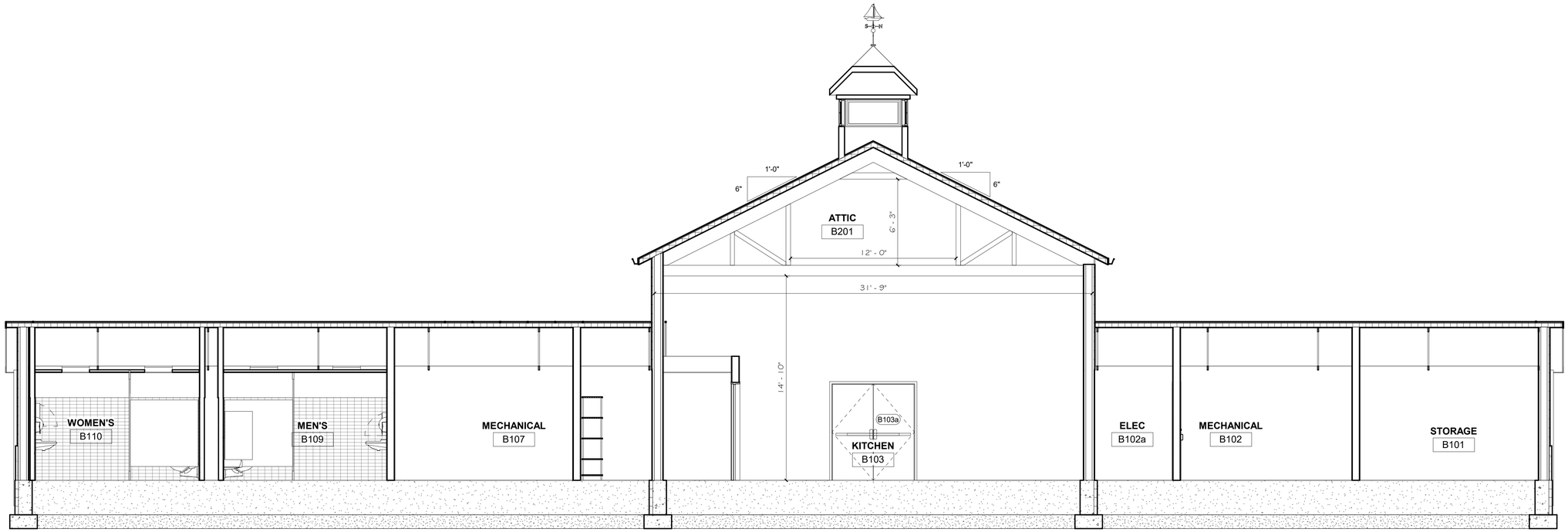

1 / B-A3.0 BUILDING SECTION

1/4" = 1'-0"

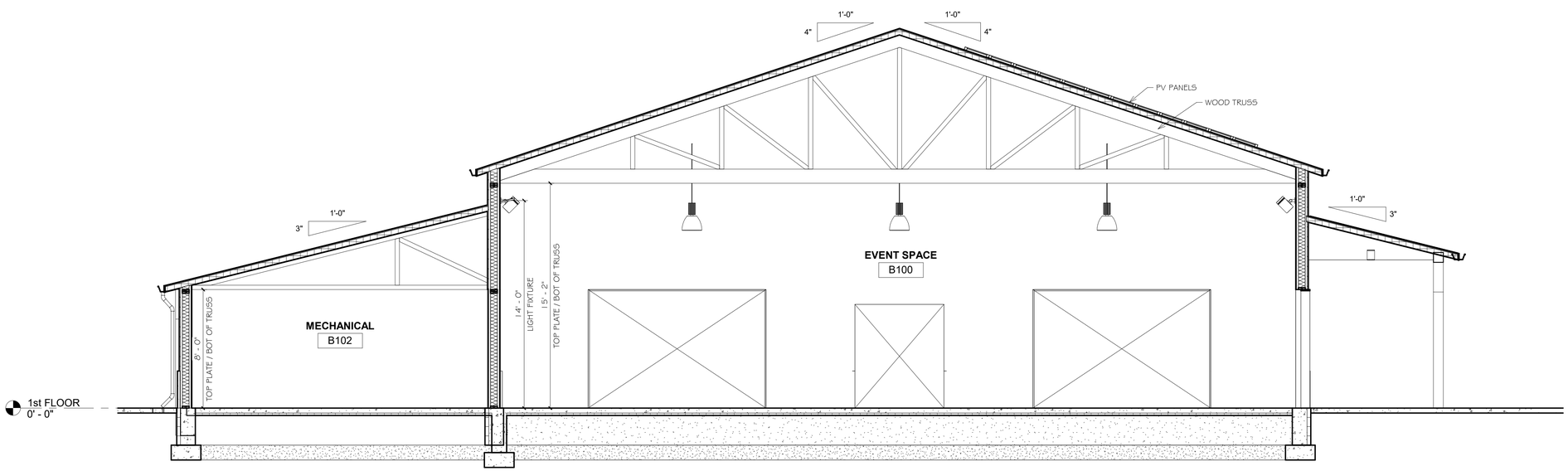

2 / B-A3.0 BUILDING SECTION

1/4" = 1'-0"

ARCHITECTS

Saccoccio & Associates, Inc.

1085 Park Avenue
Cranston, Rhode Island
02910

tel 401.942.7970
fax 401.942.7975

Consultant

ROGER WILLIAMS PARK ZOO PAVILION

ROGER WILLIAMS PARK ZOO

1000 ELMWOOD AVENUE,
PROVIDENCE, RI 02907

Revision Schedule	
Revision Number	Revision Date

ISSUED FOR BID
AUGUST 19, 2024

SHEET TITLE

BUILDING SECTIONS

DRAWN BY:	KC	JOB NUMBER:	18050
CHECKED BY:	MS	DATE:	8-19-2024

B-A3.0

SHEET: OF:

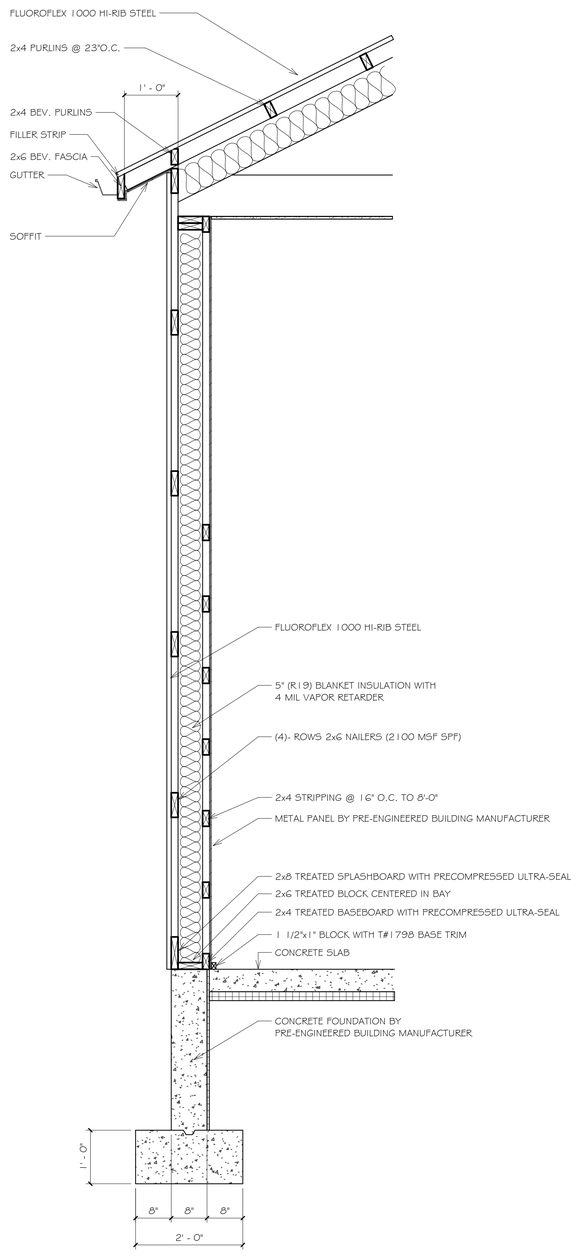

1 / B-A3.1 TYPICAL EXTERIOR WALL SECTION

3/4" = 1'-0"

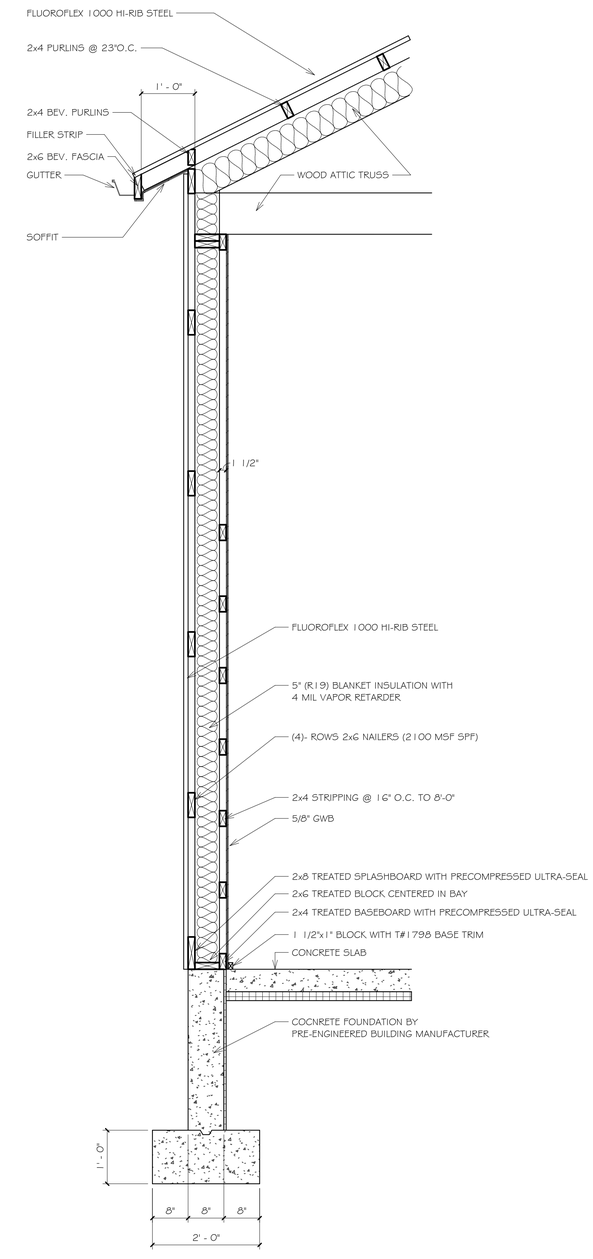

2 / B-A3.1 EXTERIOR WALL SECTION (AT ATTIC TRUSS)

3/4" = 1'-0"

ARCHITECTS

Saccoccio & Associates, Inc.

1085 Park Avenue
Cranston, Rhode Island
02910

tel 401.942.7970
fax 401.942.7975

Consultant

ROGER WILLIAMS PARK ZOO PAVILION

ROGER WILLIAMS PARK ZOO

1000 ELMWOOD AVENUE,
PROVIDENCE, RI 02907

Revision Schedule	
Revision Number	Revision Date

ISSUED FOR BID
AUGUST 19, 2024

SHEET TITLE

WALL SECTIONS & DETAILS

DRAWN BY:	KC	JOB NUMBER:	18050
CHECKED BY:	MS	DATE:	8-19-2024

B-A3.1

SHEET: OF:

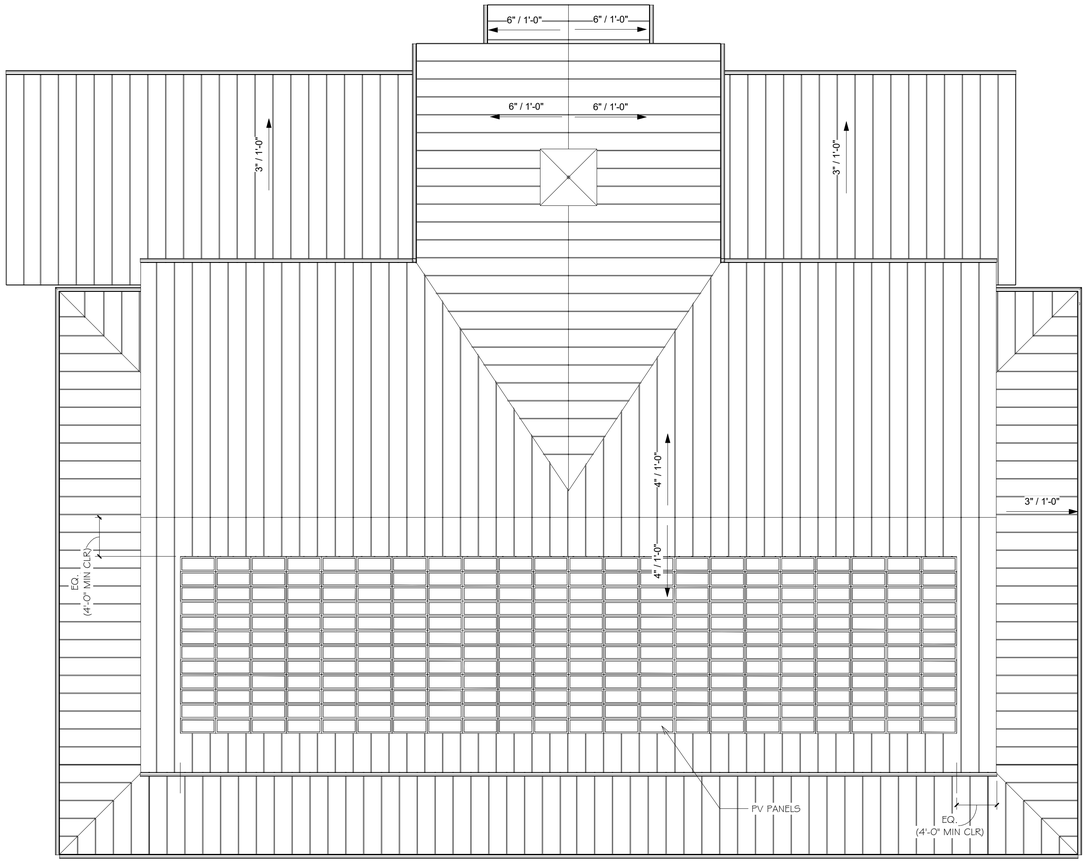

1 B-A5.0 ROOF PLAN

1/8" = 1'-0"

ARCHITECTS

Saccoccio & Associates, Inc.

1085 Park Avenue
Cranston, Rhode Island
02910

tel 401.942.7970
fax 401.942.7975

Consultant

ROGER WILLIAMS PARK ZOO PAVILION

ROGER WILLIAMS PARK ZOO

1000 ELMWOOD AVENUE,
PROVIDENCE, RI 02907

Revision Schedule	
Revision Number	Revision Date

ISSUED FOR BID
AUGUST 19, 2024

SHEET TITLE

ROOF PLAN & DETAILS

DRAWN BY:	KC	JOB NUMBER:	18050
CHECKED BY:	MS	DATE:	8-19-2024

B-A5.0

SHEET: OF:

DOOR SCHEDULE

NUMBER	TO ROOM	DOOR WIDTH	DOOR HEIGHT	DOOR THICKNESS	DOOR ELEV	DOOR MATERIAL	DOOR FINISH	DOOR GLAZING	FRAME ELEV	FRAME MATERIAL	FRAME FINISH	FIRE RATING	DETAILS HEAD	DETAILS JAMB	HARDWARE	COMMENTS
B101	STORAGE	6' - 0"	7' - 0"	0' - 1 3/4"	D1	WD	S4F		F1	HM	PT	-	-	-	21	
B102	MECHANICAL	6' - 0"	7' - 0"	0' - 1 3/4"	D1	WD	S4F		F1	HM	PT	45 MIN	-	-	13	
B102a	MECHANICAL	6' - 0"	7' - 0"	0' - 1 3/4"	D1	HM	PT		F1	HM	PT	45 MIN	-	-	13	
B103	KITCHEN	3' - 0"	7' - 0"	0' - 1 3/4"	D2	WD	S4F	TEMP	F2	HM	PT	-	-	-	22	
B103a	KITCHEN	6' - 0"	7' - 0"	0' - 1 3/4"	D4a	GHM	PT		F1	GHM	PT	-	-	-	6	WEATHERSTRIPPING
B103b	KITCHEN	3' - 0"	7' - 0"	0' - 1 3/4"	D2	WD	S4F	TEMP	F2	HM	PT	-	-	-	22	
B104	CORRIDOR	3' - 0"	7' - 0"	0' - 1 3/4"	D1	WD	S4F		F1	HM	PT	-	-	-	20	
B106	STORAGE	3' - 0"	7' - 0"	0' - 1 3/4"	D1	HM	PT		F1	HM	PT	-	-	-	12	
B107	MECHANICAL	6' - 0"	7' - 0"	0' - 1 3/4"	D1	WD	S4F		F1	HM	PT	45 MIN	-	-	13	
B109	MEN'S	3' - 0"	7' - 0"	0' - 1 3/4"	D1	WD	S4F		F1	HM	PT	-	-	-	8	
B110	WOMEN'S	3' - 0"	7' - 0"	0' - 1 3/4"	D1	WD	S4F		F1	HM	PT	-	-	-	8	

DOOR SCHEDULE NOTES

1. ALL WD DOORS ARE SOLID CORE WOOD DOORS AND ARE TO RECEIVE CLEAR FINISHES.
2. ALL HM DOORS AND FRAMES ARE TO BE PAINTED.
3. FIRE RATINGS AND EXIT DEVICES SHALL BE PROVIDED PER THE APPLICABLE CODE.

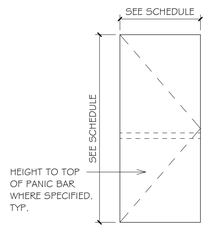

FLUSH DOOR

D1

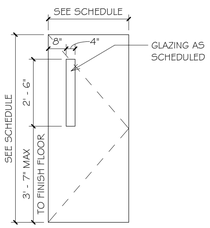

FLUSH DOUBLE ACTING DOOR W/ VISION PANEL

D2

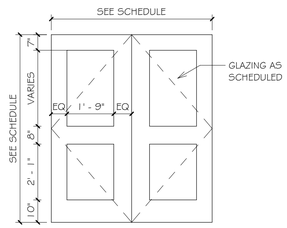

EXTERIOR DOOR W/ GLAZING

D3

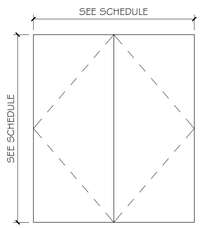

FLUSH DOUBLE DOOR

D4

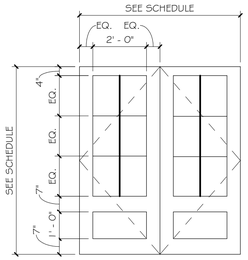

PANEL DOUBLE DOOR

D4a

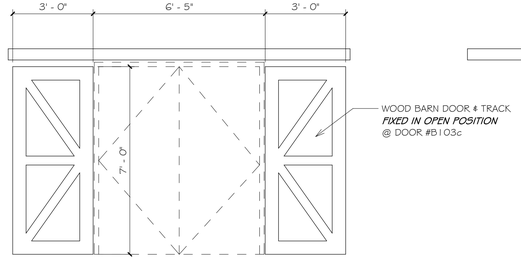

SLIDING BARN DOOR

D5

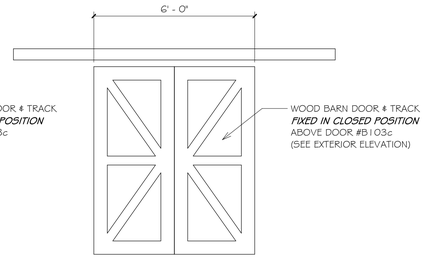

SLIDING BARN DOOR

D6

DOOR TYPES

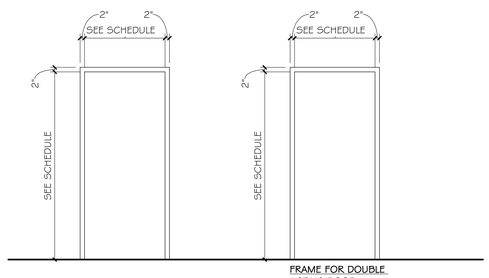

FRAME FOR DOUBLE ACTING DOOR

F1 F2

FRAME TYPES

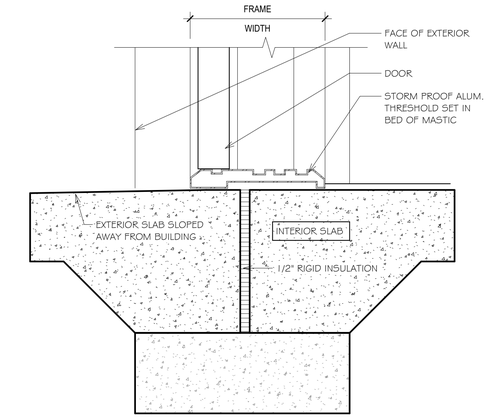

1 / B-A6.0 — EXTERIOR THRESHOLDS (TYP.)

3" = 1'-0"

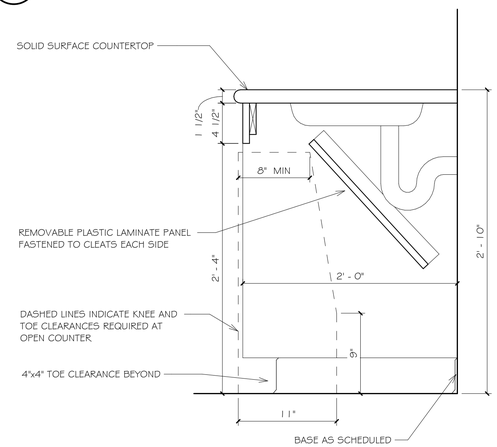

2 / B-A6.0 — KNEE PANEL DETAIL

1 1/2" = 1'-0"

ROOM FINISH SCHEDULE

ROOM #	ROOM NAME	WALLS NORTH	WALLS SOUTH	WALLS EAST	WALLS WEST	FLOOR	BASE MATERIAL	BASE HEIGHT	CEILING	COMMENTS
B100	EVENT SPACE	METAL PANEL	METAL PANEL	METAL PANEL	METAL PANEL	SC5	B3	6"	SOFFIT PANEL	METAL PANEL BY PRE-ENGINEERED BUILDING
B101	STORAGE	PNT	PNT	PNT	PNT	SC5	B1	4"	OTS	
B102	MECHANICAL	PNT	PNT	PNT	PNT	CONCRETE UNFINISHED	-	0"	OTS	
B102a	ELEC	PNT	PNT	PNT	PNT	CONCRETE UNFINISHED	-	0"	OTS	
B103	KITCHEN	PNT	PNT	PNT	PNT	CONCRETE UNFINISHED	-	0"	OTS	GWB TO BE PRIMED ONLY
B104	JAN	FRP	FRP	FRP	FRP	SC5	B1	4"	OTS	
B105	CORRIDOR	METAL PANEL	METAL PANEL	METAL PANEL	METAL PANEL	SC5	B3	6"	SOFFIT PANEL	METAL PANEL BY PRE-ENGINEERED BUILDING
B106	STORAGE	PNT	PNT	PNT	PNT	SC5	B1	4"	OTS	
B107	MECHANICAL	PNT	PNT	PNT	PNT	CONCRETE UNFINISHED	-	0"	OTS	
B108	CORRIDOR	METAL PANEL	METAL PANEL	METAL PANEL	METAL PANEL	SC5	B3	6"	SOFFIT PANEL	METAL PANEL BY PRE-ENGINEERED BUILDING
B109	MEN'S	CT / PNT	CT / PNT	CT / PNT	CT / PNT	SC5	B2		ACT1	
B110	WOMEN'S	CT / PNT	CT / PNT	CT / PNT	CT / PNT	SC5	B2		ACT1	
B201	ATTIC	-	-	-	-	-	-		OTS	

FINISH SCHEDULE NOTES

1. 5/8" GWB TO BE REPLACED w/ 5/8" CEMENTITIOUS TILE BACKER BOARD WHEREVER ANY PORTION OF A WALL OR CEILING IS SCHEDULED TO RECEIVE CT.
2. ALL INTERIOR ARCHITECTURAL WOODWORK SHALL RECEIVE FINISH TO MATCH DOOR FINISH WITHIN THE SAME ROOM UNLESS OTHERWISE SPECIFIED.

ARCHITECTS

Saccoccio & Associates, Inc.

1085 Park Avenue
Cranston, Rhode Island
02910

tel 401.942.7970
fax 401.942.7975

Consultant

ROGER WILLIAMS PARK ZOO PAVILION

ROGER WILLIAMS PARK ZOO

1000 ELMWOOD AVENUE,
PROVIDENCE, RI 02907

Revision Schedule	
Revision Number	Revision Date

ISSUED FOR BID
AUGUST 19, 2024

SHEET TITLE

DOOR / WINDOW & ROOM FINISH SCHEDULES

DRAWN BY:	KC	JOB NUMBER:	18050
CHECKED BY:	MS	DATE:	8-19-2024

B-A6.0

SHEET: OF:

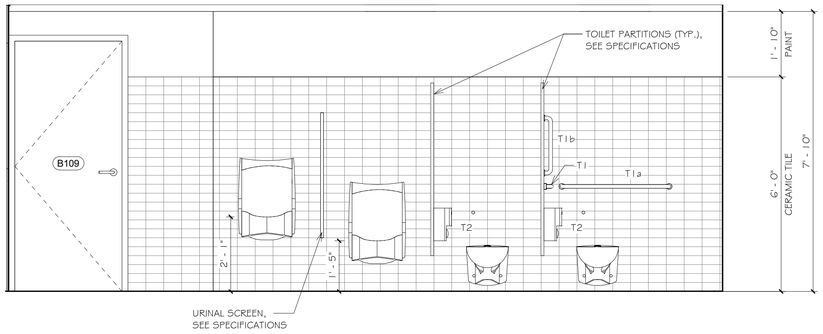

1 B-A7.0 MENS - ELEVATION

1/2" = 1'-0"

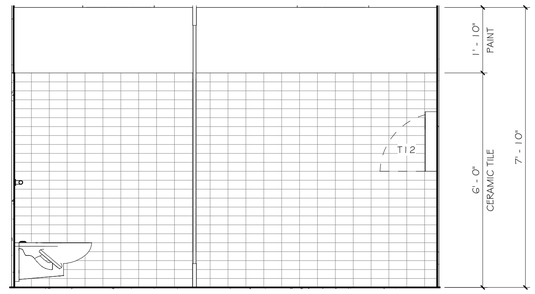

2 B-A7.0 MENS - ELEVATION

1/2" = 1'-0"

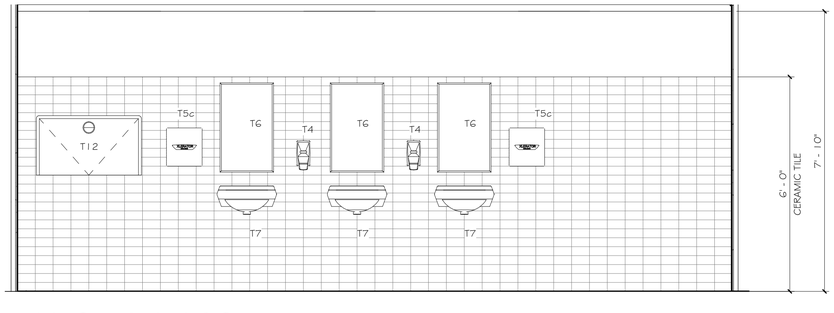

3 B-A7.0 MENS - ELEVATION

1/2" = 1'-0"

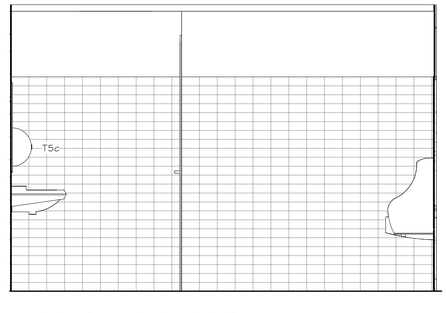

4 B-A7.0 MENS - ELEVATION

1/2" = 1'-0"

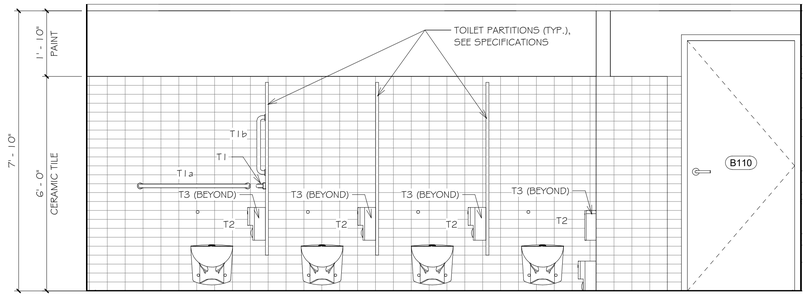

5 B-A7.0 WOMENS - ELEVATION

1/2" = 1'-0"

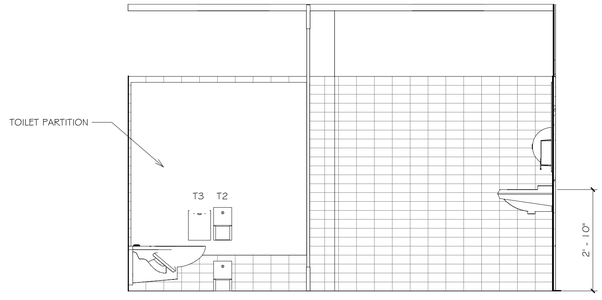

6 B-A7.0 WOMENS - ELEVATION

1/2" = 1'-0"

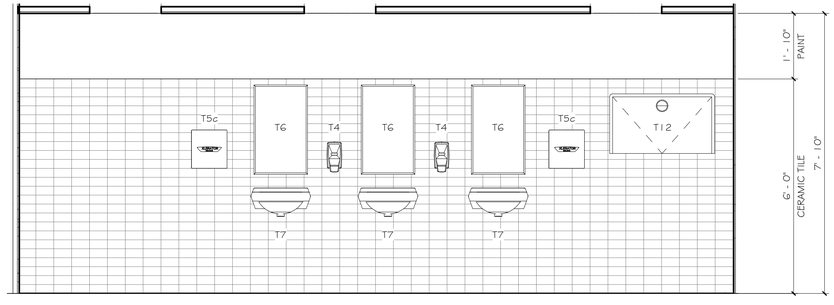

7 B-A7.0 WOMENS - ELEVATION

1/2" = 1'-0"

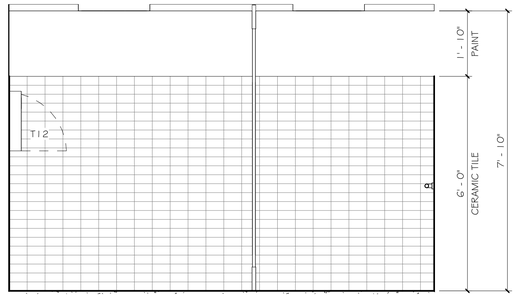

8 B-A7.0 WOMENS - ELEVATION

1/2" = 1'-0"

NOTE:
SEE FINISH SCHEDULE & MATERIALS SCHEDULES FOR ADDITIONAL INFORMATION

ARCHITECTS

Saccoccio & Associates, Inc.

1085 Park Avenue
Cranston, Rhode Island
02910

tel 401.942.7970
fax 401.942.7975

Consultant

ROGER WILLIAMS PARK ZOO PAVILION

ROGER WILLIAMS PARK ZOO

1000 ELMWOOD AVENUE,
PROVIDENCE, RI 02907

Revision Schedule	
Revision Number	Revision Date

ISSUED FOR BID
AUGUST 19, 2024

SHEET TITLE

INTERIOR ELEVATIONS

DRAWN BY:	KC	JOB NUMBER:	18050
CHECKED BY:	MS	DATE:	8-19-2024

B-A7.0

SHEET: OF:

LEGEND

ACOUSTICAL LAY-IN TILE

X'-X" CEILING HEIGHT
OTS = OPEN TO STRUCTURE
BOS = BOTTOM OF STRUCTURE

NOTES

1. SEE MEP DRAWINGS FOR OTHER FIXTURES/DEVICES/EQUIPMENT THAT MAY NOT BE SHOWN ON THESE REFLECTED CEILING PLANS.

2. PROVIDE 3 1/2" SOUND ATTENUATION BATTS IN CEILING WHERE NOTED.

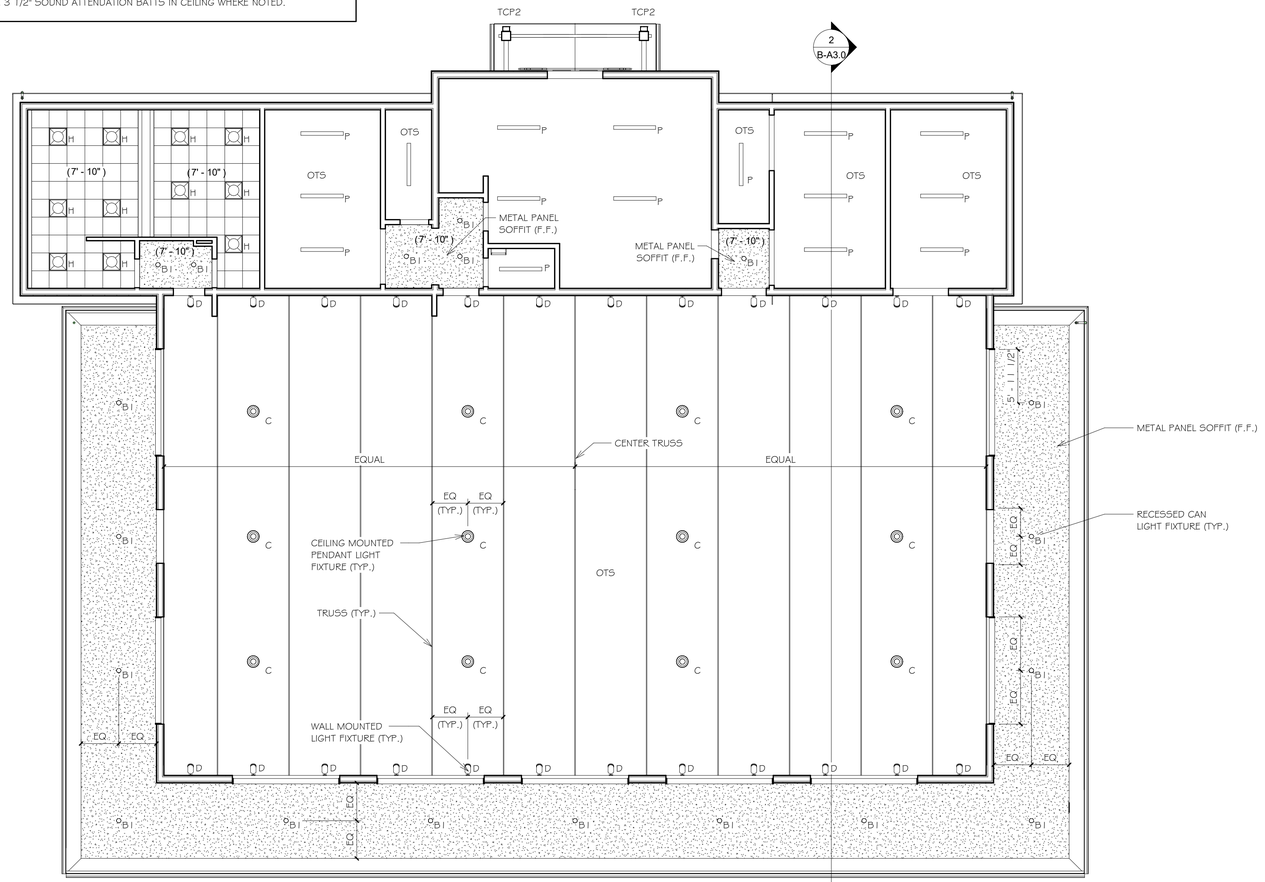

1 B-A8.0 REFLECTED CEILING PLAN

1/8" = 1'-0"

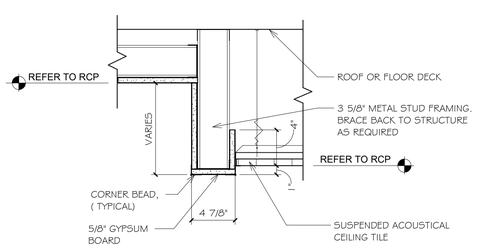

GYPSUM WALL BOARD TO ACOUSTICAL CEILING TILE

2 B-A8.0 CEILING SOFFIT TRANSITION DETAIL

1 1/2" = 1'-0"

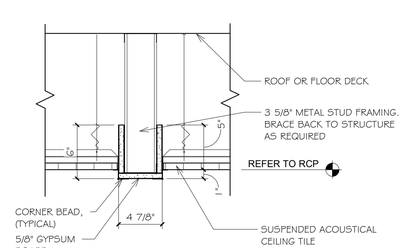

ACOUSTICAL CEILING TILE TO ACOUSTICAL CEILING TILE

3 B-A8.0 CEILING SOFFIT TRANSITION DETAIL

1 1/2" = 1'-0"

ARCHITECTS

Saccoccio & Associates, Inc.
1085 Park Avenue
Cranston, Rhode Island
02910
tel 401.942.7970
fax 401.942.7975

Consultant

ROGER WILLIAMS PARK ZOO PAVILION

ROGER WILLIAMS PARK ZOO

1000 ELMWOOD AVENUE,
PROVIDENCE, RI 02907

Revision Schedule	
Revision Number	Revision Date

ISSUED FOR BID
AUGUST 19, 2024

SHEET TITLE

REFLECTED CEILING PLAN

DRAWN BY:	KR	JOB NUMBER:	18050
CHECKED BY:	MS	DATE:	8-19-2024

B-A8.0

SHEET: OF:

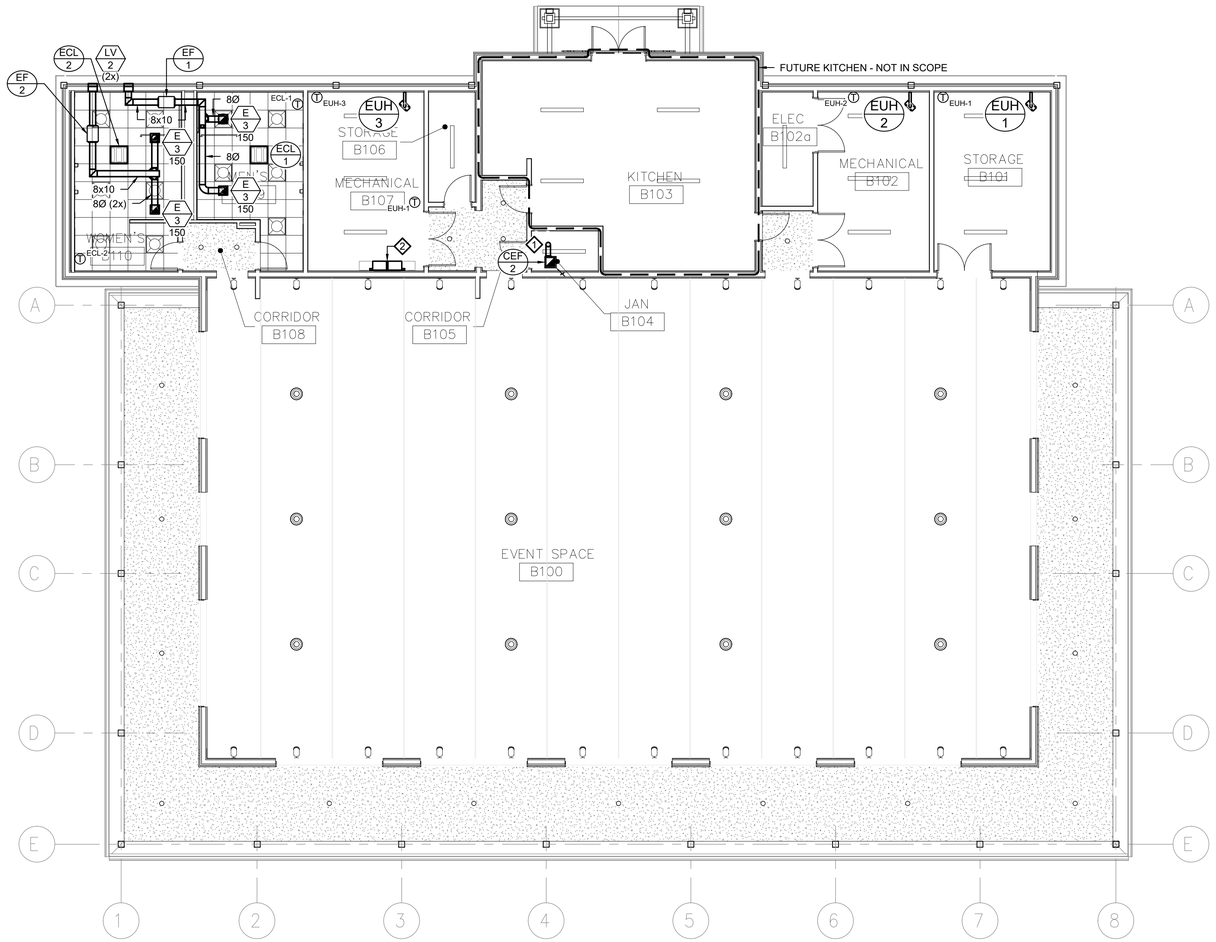

1 B-M1.1 PAVILION MECHANICAL PLAN
1/8" = 1'-0"

MINIMUM CLEARANCE NOTES:

1. ALL MECHANICAL EQUIPMENT INSTALLED ON ROOF MUST MAINTAIN A MINIMUM OF 10'-0" FROM ROOF EDGE.
2. ALL EXHAUST TERMINATIONS MUST MAINTAIN A MINIMUM OF 10'-0" HORIZONTAL DISTANCE FROM ALL FA INTAKES AND OPENINGS.

MECHANICAL NOTE:

1. FINAL LOCATION OF THERMOSTATS DETERMINED BY OWNER. COORDINATE WITH ARCH. AND MC AS REQUIRED.
2. CONTRACTOR TO COORDINATE DUCT ROUTING AND DIFFUSER LOCATION WITH NEW LIGHTING IN FIELD. COORDINATE WITH E.C. AS REQUIRED.

KEYED MECHANICAL NOTE:

1. 6Ø UP TO GOOSENECK TERMINATION ON ROOF. MAINTAIN ALL MINIMUM CLEARANCES REQUIRED BY LOCAL CODES.
2. CONCENTRIC VENT/FLUE FOR NEW HOT WATER HEATERS UP THROUGH ROOF. CONTRACTOR TO DETERMINE EXACT ROUTING IN FIELD. SIZE AND INSTALL PER MANUFACTURER'S RECOMMENDED INSTRUCTIONS. MAINTAIN ALL MINIMUM CLEARANCES REQUIRED BY LOCAL CODES.

ARCHITECTS
Saccoccio & Associates, Inc.
1085 Park Avenue
Cranston, Rhode Island
02910
tel 401.942.7970
fax 401.942.7975
Consultant
ENGINEERING DESIGN SERVICES INCORPORATED
141 Industrial Highway Scituate, RI 02876
Tel (401) 765-7659 Fax (401) 765-2984

Education Center, Animal Building, & Pavilion

ROGER WILLIAMS PARK ZOO
100 ELMWOOD AVENUE
PROVIDENCE, RI 02907

Revision Schedule	
Revision Number	Revision Date

Issued for Bid
08/19/2024

SHEET TITLE

MECHANICAL PAVILION PLAN

DRAWN BY: MFM/AJV	JOB NUMBER: 18050
CHECKED BY: WTM	DATE: 08/19/2024

B-M1.1

SHEET: OF:

KEY NOTES

1. 2" KW & T UP (CI)
2. 3" KW & T UP (CI)
3. 4" KW & T UP (CI)
4. 2" V UP (CI)
5. 3" V UP (CI)

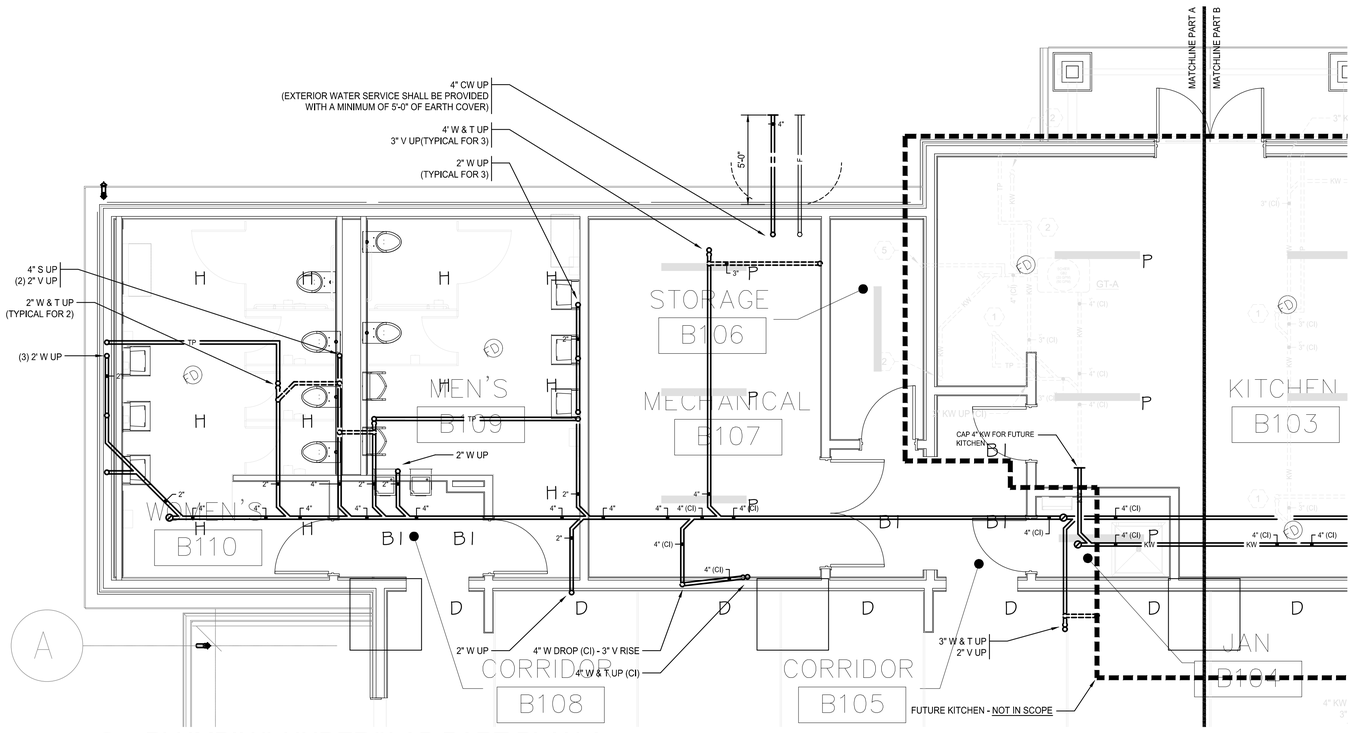

1 B-P1.0 PLUMBING UNDERSLAB PART PLAN A

1/4" = 1'-0"

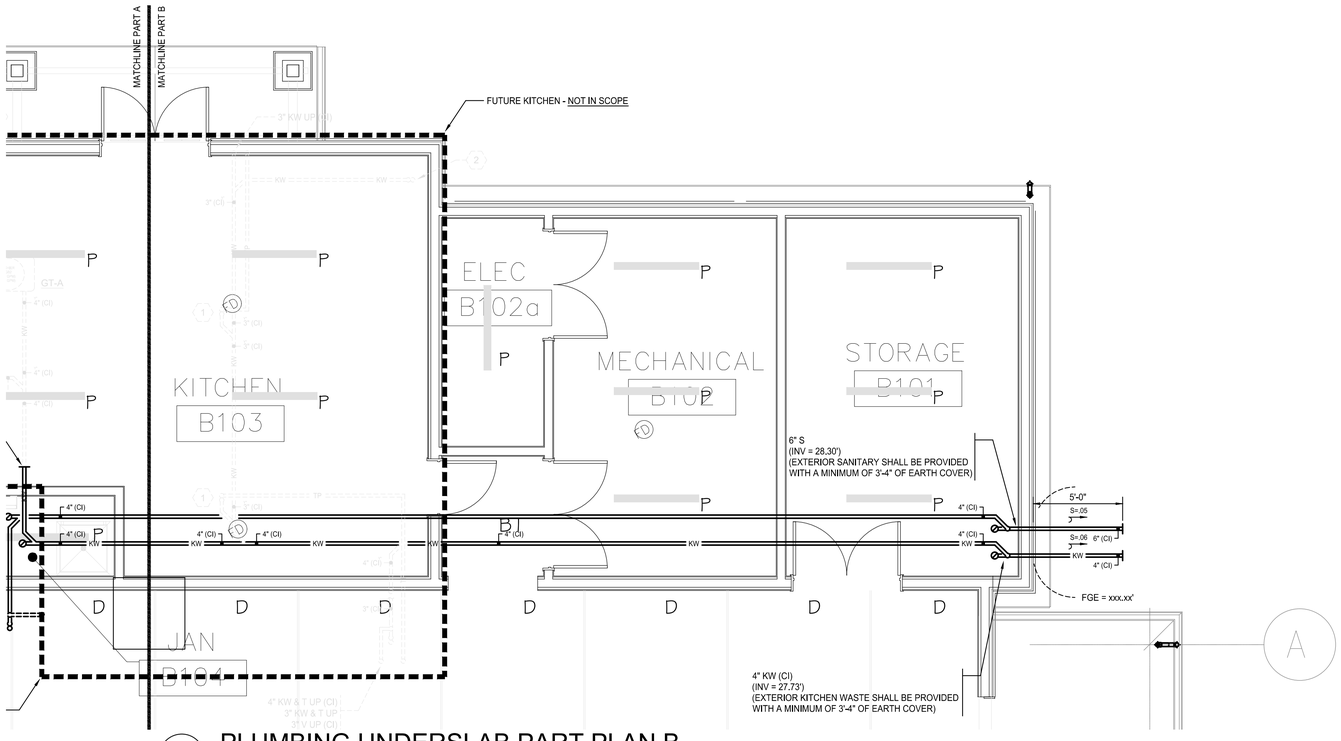

2 B-P1.0 PLUMBING UNDERSLAB PART PLAN B

1/4" = 1'-0"

SCALE: 1/4" = 1'-0"

4 2 0 FEET 4 8

FINISHED FLOOR ELEVATION = 34.25'

ARCHITECTS

Saccoccio & Associates, Inc.

1085 Park Avenue
Cranston, Rhode Island
02910

tel 401.942.7970
fax 401.942.7975

Consultant

ENGINEERING DESIGN SERVICES INCORPORATED

Education Center, Animal Building, & Pavilion

ROGER WILLIAMS PARK ZOO

100 ELMWOOD AVENUE
PROVIDENCE, RI 02907

Revision Schedule	
Revision Number	Revision Date

Issued for Bid
08/19/2024

SHEET TITLE

PLUMBING PAVILION UNDERSLAB PLAN

DRAWN BY:	GGM	JOB NUMBER:	18050
CHECKED BY:	GGM	DATE:	08/19/2024

B-P1.0

SHEET: OF:

FOOD SERVICE EQUIPMENT SCHEDULE

DESIGNATION	EQUIPMENT DESCRIPTION	SERVICE SIZE								REMARKS
		CW	HW	140HW	S/W	KW	IW	V	G	
1	CONVECTION OVEN	-	-	-	-	-	-	-	1 1/4"	140 CFH AT 5" WC TO 10" WC, , PROVIDE FLEXIBLE SUPPLY KIT
2	FRYER	-	-	-	-	-	-	-	1 1/4"	152 CFH AT 4" WC TO 11" WC, PROVIDE FLEXIBLE SUPPLY KIT
3	RANGE	-	-	-	-	-	-	-	1 1/2"	290 CFH AT 5" WC TO 10" WC, PROVIDE FLEXIBLE SUPPLY KIT
7	HAND SINK	1/2"	-	1/2"	-	2"	-	2"	-	PRECISION PLUMBING PRODUCTS PRIME PRO PRO1-ULP500 FLOOR DRAIN TRAP PRIMER VALVE SYMMONS MAXLINE 7 SERIES THERMOSTATIC MIXING VALVE, LOCATE AS HIGH AS POSSIBLE UNDER SINK, OUTLET WATER SHALL BE SET TO A MAXIMUM TEMPERATURE OF 110 DEGREES, PROVIDE (2)SA-A
9	STEAMER	(2) 1/2"	-	-	-	-	1 1/4"	-	-	WATTS LF7R DUAL CHECK VALVE WATTS U5B PRESSURE REDUCING VALVE WITH PRESSURE GAUGES ON INLET / OUTLET AND SA-A INDIRECT WASTE PIPING SHALL BE COPPER
10	WAREWASHER	3/4" *	-	3/4" *	-	2"	-	-	-	DISCHARGE OF WASTE WATER SHALL NOT EXCEED 140˚F - MANUFACTURER SHALL PROVIDE DRAIN TEMPERING KIT (2) U5B PRESSURE REDUCING VALVE WITH PRESSURE GAUGES ON INLET / OUTLET AND (2) SA-A
17	THREE COMPARTMENT POT SINK	(2) 1/2" *	-	(2) 1/2" *	-	-	(3) 1 1/2"	-	-	EACH ACTUAL BOWL SIZE 18" x 18" x 14" AT 75% FULL CAPACITY WITH 2 MINUTE FLOW CONTROL = 23 GPM, (2)SA-A SANITIZE COMPARTMENT SHALL BE PROVIDED WITH A CHEMICAL SANITATION AGENT
18	ICE MACHINE	1/2"	-	-	-	-	-	-	-	WATTS LF7R DUAL CHECK VALVE AND SA-A PRECISION PLUMBING PRODUCTS PRIME PRO PRO1-ULP500 FLOOR DRAIN TRAP PRIMER VALVE
19	SOILED DISHTABLE	1/2"	-	1/2"	-	-	1 1/2"	-	-	PRECISION PLUMBING PRODUCTS PRIME PRO PRO1-ULP500 FLOOR DRAIN TRAP PRIMER VALVE INDIRECT WASTE PIPING NOT INDICATED, REFER TO FOOD SERVICE EQUIPMENT PLUMBING ROUGHING PLAN FOR ADDITIONAL INFORMATION, INDIRECT WASTE PIPING SHALL BE FIELD COORDINATED TO SPILL TO FLOOR SINK
EH1	EXHAUST HOOD	-	-	-	-	-	-	-	-	HEAT SENSORS INCLUDED TO COMPLY WITH 2019 RHODE ISLAND FUEL GAS CODE 505.1.1 EXCEPTION WASH DOWN SYSTEM NOT FURNISHED - GREASE TRAP NOT REQUIRED EXHAUST HOOD IS FURNISHED WITH A STANDARD GREASE CUP FOR MANUAL EMPTYING

FOOD SERVICE EQUIPMENT PLUMBING NOTES:

1. REFER TO KITCHEN EQUIPMENT DRAWINGS FOR ADDITIONAL INFORMATION.
2. EQUIPMENT PURCHASED MAY VARY SLIGHTLY FROM THAT INDICATED AND THEREFORE REQUIRE SOME REARRANGEMENTS OF EQUIPMENT DIFFERENT FROM THAT INDICATED ON THE DRAWINGS. MAKE CONNECTIONS TO SUCH REARRANGEDEQUIPMENT WITHOUT ADDITIONAL COST TO THE OWNER
3. ROUGHING SHALL NOT BE UNDERTAKEN UNTIL ARCHITECT HAS APPROVED EQUIPMENT AND FIXTURE SHOP DRAWINGS AND KITCHEN TEMPLATE IS FURNISHED BY PERTINENT MANUFACTURER SO THAT CONNECTING REQUIREMENTS MAY BE VERIFIED AND WORK INSTALLED IN A NEAT AND WORKMANLIKE MANNER. EXACT LOCATION OF SERVICE CONNECTIONS SHALL BE OBTAINED PRIOR TO ROUGHING.
4. ALL FINAL CONNECTIONS TO KITCHEN EQUIPMENT AND FIXTURES SHALL BE BY THE PLUMBING CONTRACTOR.
5. ALL EXPOSED VALVES, PIPING AND FITTINGS SHALL BE SCREWED BRASS CHROME PLATED.
6. PLUMBING CONTRACTOR SHALL PROVIDE EACH CONNECTION TO EACH PIECE OF EQUIPMENT ITS OWN INDIVIDUAL WATER OR GAS FULL SIZE SHUTOFF VALVE UNLESS OTHERWISE INDICATED.
7. KITCHEN EQUIPMENT CONTRACTOR SHALL PROVIDE ALL KITCHEN EQUIPMENT LISTED IN THE KITCHEN EQUIPMENT SCHEDULE INCLUDING EQUIPMENT TRIM, FAUCETS, SINK WASTES, TAIL PIECES AND VACUUM BREAKERS. PLUMBING CONTRACTOR SHALL PROVIDE FULL SIZE TRAP AND EXTENSION. PLUMBING CONTRACTOR SHALL ASSEMBLE AND INSTALL ALL KITCHEN EQUIPMENT LISTED IN THE KITCHEN EQUIPMENT SCHEDULE INCLUDING TRIM, FAUCETS, SINK WASTE, TAIL PIECES, VACUUM BREAKERS, TRAP AND EXTENSIONS.
8. INDIRECT WASTE PIPING NOT INDICATED, REFER TO FOOD SERVICE EQUIPMENT PLUMBING ROUGHING PLAN FOR ADDITIONAL INFORMATION, INDIRECT WASTE PIPING SHALL BE PROVIDED AND FIELD COORDINATED TO SPILL TO FLOOR SINK.
9. ALL INDIRECT WASTE PIPING SHALL BE COPPER, PVC SHALL NOT BE ALLOWED.
10. ALL INDIRECT WASTE PIPING SHALL TERMINATE BY MEANS OF AN AIR GAP.
11. ALL INDIRECT WASTE PIPING THAT EXCEEDS TWO FEET IN DEVELOPED LENGTH MEASURED HORIZONTALLY OR FOUR FEET IN TOTAL DEVELOPED LENGTH SHALL BE TRAPPED, SHOULD THE DRAWINGS INDICATE THAT THERE IS NO TRAP SERVING A PIECE OF EQUIPMENT, HOWEVER DO TO MISCELLANEOUS DISCREPANCIES AND COORDINATION SHOULD THE LENGTH EXCEED THE MINIMUM REQUIREMENTS, A TRAP SHALL BE PROVIDED.
12. ALL INDIRECT WASTE PIPING SHALL BE MECHANICALLY SUPPORTED AT TWO LOCATIONS IN THE LAST 24 INCHES, ANY PIPING LESS THAN 24 INCHES SHALL BE MECHANICALLY SUPPORTED A MINIMUM OF ONE LOCATION.
13. A LAMINATED SIGN SHALL BE STENCILED ON OR IN THE IMMEDIATE AREA OF THE GREASE TRAP IN LETTERS ONE INCH HIGH. THE SIGN SHALL STATE THE FOLLOWING IN EXACT LANGUAGE:

    IMPORTANT
    THIS GREASE TRAP SHALL BE INSPECTED AND THOROUGHLY CLEANED ON A REGULAR AND FREQUENT BASIS.
    FAILURE TO DO SO COULD RESULT IN DAMAGE TO THE PIPING SYSTEM AND THE MUNICIPAL DRAINAGE SYSTEM.

14. WHERE GAS PIPING IS SHOWN DROPPING BEHIND FOOD SERVICE EQUIPMENT WITH SIZE NOTED, THAT SIZE SHALL BE CARRIED FULL LENGTH SERVING ALL EQUIPMENT. REFER TO PLUMBING FIXTURE SCHEDULE ON THIS DRAWING FOR INDIVIDUAL FIXTURE SERVICE SIZES.

* COLD WATER AND HOT WATER ARE PROTECTED WITH DEDICATED REDUCED PRESSURE BACKFLOW PREVENTERS CREATING NON-POTABLE COLD WATER AND NON-POTABLE HOT WATER

PLUMBING BEVERAGE CONDUIT NOTES

1. DESIGN OF BEER AND SODA BEVERAGE CONDUIT PIPING SYSTEMS SHALL BE BY THE FOOD SERVICE EQUIPMENT CONSULTANT. REFER TO FOOD SERVICE EQUIPMENT DRAWINGS FOR COMPLETE SCOPE.
2. INSTALLATION OF BEER AND SODA BEVERAGE CONDUIT PIPING SYSTEMS AS INDICATED ON THE FOOD SERVICE EQUIPMENT DRAWINGS SHALL BE BY THIS PLUMBING CONTRACTOR.

PLUMBING WATER HEATER NOTES:

1. WALL MOUNTED NATURAL GAS WATER HEATER

   TWO (2) RINNAI TRW02CUIN - INSTALL ONE ASSEMBLY OVER OTHER ASSEMBLY - FOUR HEATERS TOTAL
   (97% EFFICIENT)
   (NATURAL GAS CONSUMPTION 199 CFH WITH A RECOVERY RATE OF 4.8 GPM AT 100˚F RISE EACH)
   (NATURAL GAS SUPPLY PRESSURE 3.5" WC TO 10.5" WC)

2. WATER HEATER TEMPERATURE SHALL BE SET AT 140˚F.
3. 1 1/4" CW PIPING DROP SERVING TWO MANUFACTURERS MANIFOLD HEADERS.
   (DROP SHALL BE PROVIDED WITH SHUTOFF VALVE, DV-A, CHECK VALVE WITH 1/8" HOLE DRILLED IN CLAPPER, THERMAL EXPANSION TANK AND VACUUM BREAKER.
   (DROP SHALL INCLUDE X" HWC CONNECTION WITH CIRCULATION PUMP, ASSOCIATED SHUTOFF VALVES, CHECK VALVE, AQUASTAT, DV-A, FULL SIZE BY-PASS AND TIME CLOCK.
4. 1 1/4" HW PIPING RISE SERVING TWO MANUFACTURERS MANIFOLD HEADERS.
   (RISE SHALL BE PROVIDED WITH SHUTOFF VALVE, DV-A THERMOSTATIC MIXING VALVE AND THERMOMETER)
5. 2 1/2" G PIPING DROP SERVING TWO MANUFACTURERS MANIFOLD HEADERS.
   (DROP SHALL BE PROVIDED WITH SHUTOFF VALVE, PRESSURE GAUGE AND SEDIMENT LEG - 796 CFH)
6. EACH DEDICATED HEATER SHALL BE PROVIDED WITH:
   3/4" COLD WATER INLET SHUTOFF VALVE WITH UNION
   3/4" HOT WATER OUTLET SHUTOFF VALVE WITH TEMPERATURE / PRESSURE RELIEF VALVE AND UNION
   3/4" NATURAL GAS INLET SHUTOFF VALVE WITH SEDIMENT TRAP AND UNION
7. ALL PIPE CONNECTIONS SHALL BE PROVIDED WITH A DIELECTRIC UNION
8. PIPING SHALL BE INSTALLED TO ALLOW FUTURE REMOVAL OF WATER HEATER(S) VALVES AND UNIONS SHALL BE INSTALLED TO ALLOW ISOLATION OF ONE HEATER WITHOUT DISTURBANCE OF REMAINING HEATERS IN OPERATION COLD WATER, HOT WATER AND HOT WATER CIRCULATION MANIFOLDS SHALL BE INSTALLED TO ALLOW FUTURE REMOVAL OF HEATER WITHOUT DISTURBANCE OF REMAINING HEATERS IN OPERATION
9. EACH HEATER TO BE PROVIDED WITH 3" COMBUSTION AIR INTAKE AND EXHAUST.
10. INSTALLATION SHALL BE IN STRICT ACCORDANCE WITH MANUFACTURERS INSTALLATION MANUAL
11. EACH WATER HEATER CONDENSATE OUTLET SHALL BE PROVIDED WITH A CONDENSATE NEUTRALIZING TUBE (CONDENSATE NEUTRALIZING TUBE SHALL BE HORIZONTALLY MOUNTED BENEATH EACH WATER HEATER ON WALL AND OUTLET TUBING SHALL SPILL TO FLOOR DRAIN - CONDENSATE SHALL SATISFY TRAP PRIMER REQUIREMENTS)
12. A LAMINATED SIGN SHALL BE STENCILED ON OR IN THE IMMEDIATE AREA OF THE CONDENSATE NEUTRALIZING TUBE IN LETTERS ONE INCH HIGH. THE SIGN SHALL STATE THE FOLLOWING IN EXACT LANGUAGE:

    IMPORTANT
    THIS CONDENSATE NEUTRALIZING TUBE MUST BE INSPECTED ON A REGULAR AND FREQUENT BASIS AND THE NEUTRALIZING MEDIUM OR AGENT REPLACED WHEN NECESSARY.
    FAILURE TO DO SO WILL RESULT IN SERIOUS DAMAGE TO THE PIPING SYSTEM.

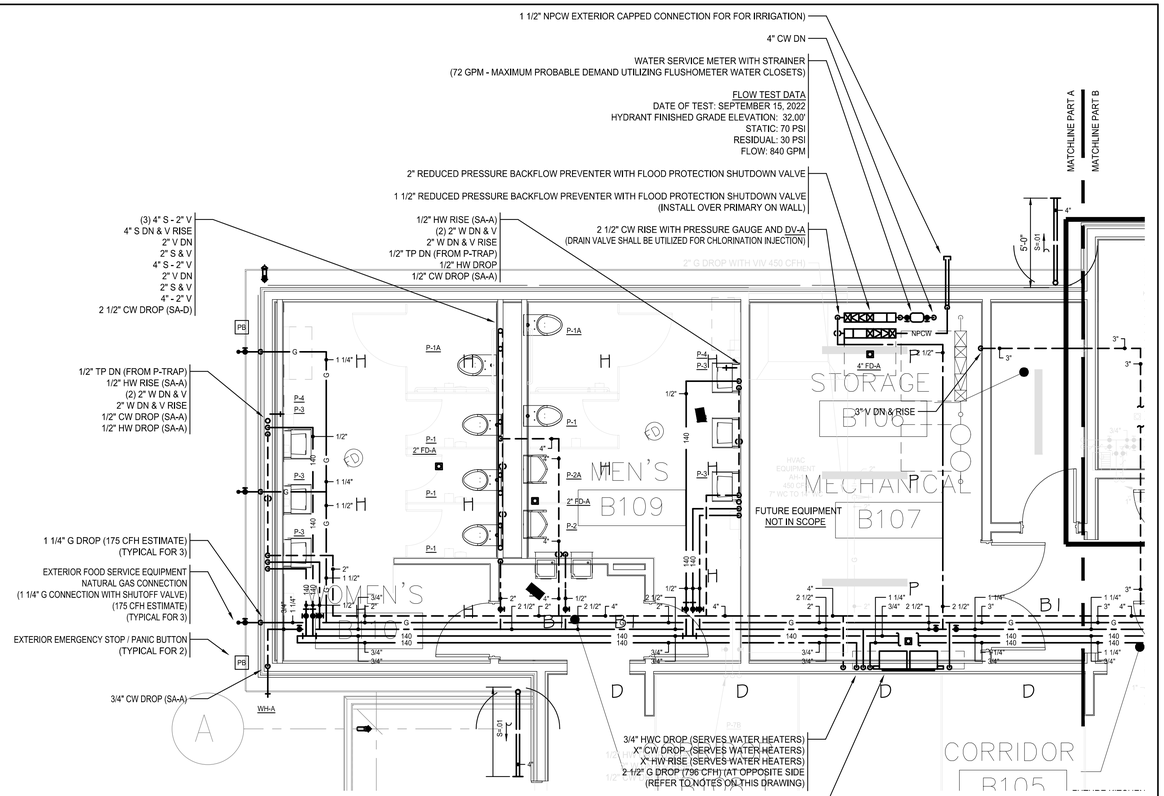

1 / B-P1.1 — PLUMBING FLOOR PLAN PART PLAN A — 1/4" = 1'-0"

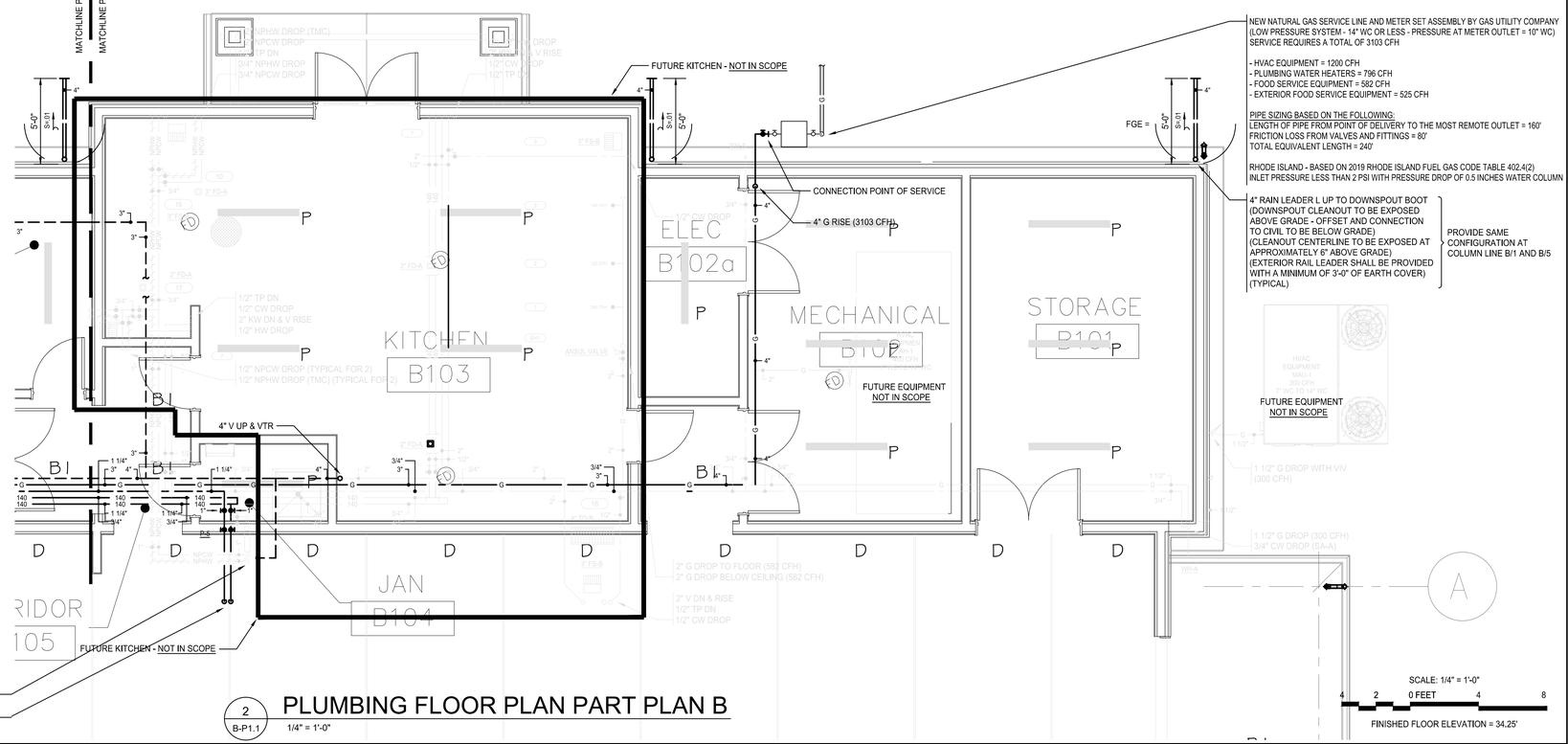

2 / B-P1.1 — PLUMBING FLOOR PLAN PART PLAN B — 1/4" = 1'-0"

ARCHITECTS
Saccoccio & Associates, Inc.
1085 Park Avenue
Cranston, Rhode Island
02910
tel 401.942.7970
fax 401.942.7975
Consultant
ENGINEERING DESIGN SERVICES INCORPORATED

Education Center, Animal Building, & Pavilion

ROGER WILLIAMS PARK ZOO
100 ELMWOOD AVENUE
PROVIDENCE, RI 02907

Revision Schedule	
Revision Number	Revision Date

Issued for Bid
08/19/2024

SHEET TITLE

PLUMBING PAVILION PART PLANS NOTES & SCHEDULES

DRAWN BY:	GGM	JOB NUMBER:	18050
CHECKED BY:	GGM	DATE:	08/19/2024

B-P1.1

SHEET: OF:

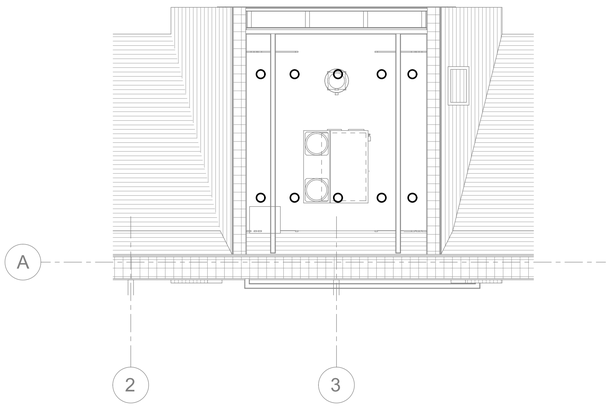

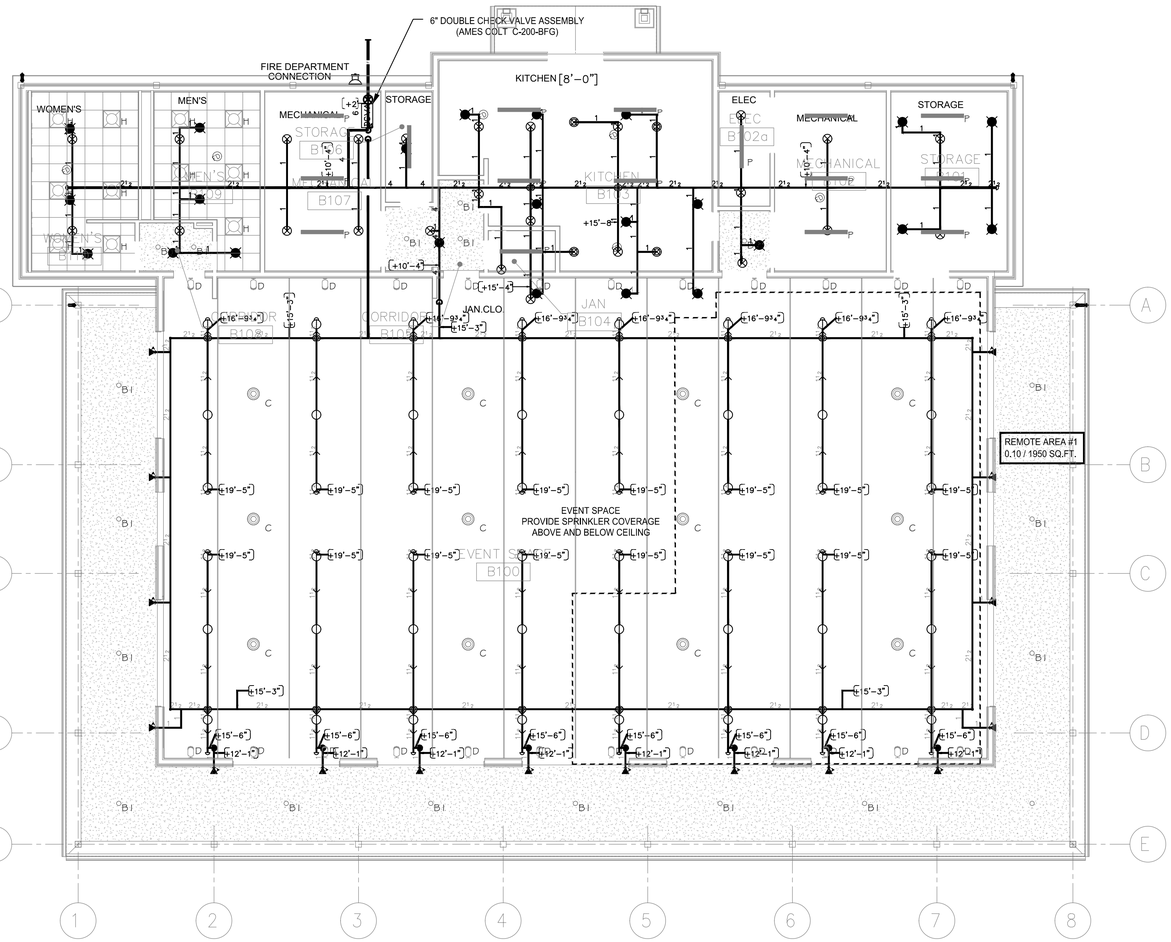

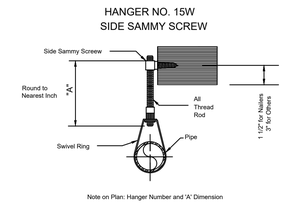

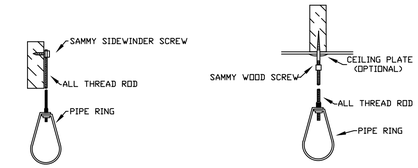

HANGER DETAILS
NOT TO SCALE

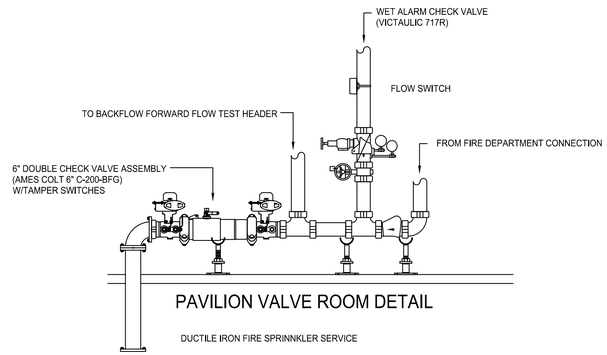

PAVILION VALVE ROOM DETAIL

DUCTILE IRON FIRE SPRINNKLER SERVICE

PAVILION BUILDING - SPRINKLER HEAD LEGEND

SYM	SPRINKLER TYPE	FINISH	TEMP	K	NPT
●	QUICK RESPONSE RECESSED PENDENT	WHITE	155	5.60	1/2"
⊗	QUICK RESPONSE UPRIGHT	BRASS	175	4.20	1/2"
○	QUICK RESPONSE UPRIGHT	BRASS	155	5.60	1/2"
⊗	QUICK RESPONSE UPRIGHT ON SPRIG	BRASS	155	5.60	1/2"
	DRY SIDEWALL	CHROME	155	5.60	1/2"

SCALE: 1/8" = 1'-0"
8 4 0 FEET 8 16
FINISHED FLOOR ELEVATION = 34.25'

ARCHITECTS
Saccoccio & Associates, Inc.
1085 Park Avenue
Cranston, Rhode Island
02910
tel 401.942.7970
fax 401.942.7975

Consultant

ENGINEERING DESIGN SERVICES INCORPORATED

Education Center, Animal Building, & Pavilion

ROGER WILLIAMS PARK ZOO
100 ELMWOOD AVENUE
PROVIDENCE, RI 02907

Revision Schedule	
Revision Number	Revision Date

Issued for Bid
08/19/2024

SHEET TITLE

FIRE PROTECTION PAVILION FLOOR PLAN

DRAWN BY:	DDL	JOB NUMBER:	18050
CHECKED BY:	GGM	DATE:	08/19/2024

B-FP1.0

SHEET: OF:

DIMMING/CONTROL PANEL SCHEDULE "DIM-1"

FLOOR / AREA	DIM-# CIRCUIT	LUTRON CIRCUIT	ZONE/CIRCUIT DESCPITION	LOAD TYPE	ACTUAL LOAD (W/VA)	MAX. LOAD (W/VA)	BREAKER SIZE	CONTROLLER
EVENT SPACE	1	1	PENDANT FIXTURES	LED	600	1920	20A/1P	"GR-1" & "WS-1"
EVENT SPACE	2	2	PENDANT FIXTURES	LED	600	1920	20A/1P	"GR-1" & "WS-1"
EVENT SPACE	3	3	PENDANT FIXTURES	LED	600	1920	20A/1P	"GR-1" & "WS-1"
EVENT SPACE	4	4	WALL FIXTURES	LED	600	1920	20A/1P	"GR-1" & "WS-1"
EVENT SPACE	5	5	WALL FIXTURES	LED	600	1920	20A/1P	"GR-1" & "WS-1"
EVENT SPACE	6	6	WALL FIXTURES	LED	600	1920	20A/1P	"GR-1" & "WS-1"
EVENT SPACE	7	7	WALL FIXTURES	LED	600	1920	20A/1P	"GR-1" & "WS-1"
EVENT SPACE	8	8	WALL FIXTURES	LED	600	1920	20A/1P	"GR-1" & "WS-1"

120/208V, 3-PHASE, 4-WIRE WITH 50AMP / 3-POLE MAIN CIRCUIT BREAKER DIMMING PANEL CONTAINING MINIMUM OF (12) 20A-1POLE BRANCH CIRCUIT BREAKERS.

DIMMING SYSTEM SPECIFICATIONS:

General:

1. ALL INFORMATION INDICATED IS BASED ON LUTRON. EQUAL MANUFACTURERS ARE ACCEPTABLE.
2. THE DIMMING SYSTEM SHALL BE PROVIDED WITH FACTORY COMMISSIONING AND PROGRAMMING. THE MANUFACTURUER SHALL PROVIDE A COMPLETE SYSTEM FUNCTION TEST ON THE INSTALLED SYSTEM AND A SYSTEM OPERATION AND MAINTENANCE INSTRUCTION FOR THE END USERS. THE DIMMING SYSTEM SHALL BE COVERED BY A MINIMUM ONE-YEAR WARRANTY FROM TIME OF ACCEPTANCE TEST. THE MANUFACTURER SHALL BE CAPABLE OF PROVIDING ON-SITE SUPPORT WITHIN 24-HOURS.
3. TIE ALL DIMMING PANELS INTO THE FIRE ALARM SYSTEM VIA FIRE ALARM SYSTEM CONTROL MODULES TO TURN ALL LIGHTS ON TO FULL BRIGHTNESS WHEN THE FIRE ALARM SYSTEM IS ACTIVATED. (TYPICAL)
4. SURFACE MOUNT GP DIMMING PANEL. PROVIDE REINFORCING TO WALL STRUCTURE FOR WEIGHT OF PANEL PER THE ARCHITECT'S AND STRUCTURAL ENGINEER'S DIRECTION. (TYPICAL)
5. GP DIMMING PANEL IS AIR COOLED. VENTS SHALL NOT BE BLOCKED OR COVERED IN ANY WAY. LEAVE 12-INCHES OF CLEARANCE ABOVE, BELOW AND IN FRONT OF PANEL. LEAVE CLEARANCES ON SIDES FOR IEC PELV/NEC CLASS 2 WIRING PER MANUFACTURERS'S RECOMMENDATIONS. (TYPICAL)
6. GP DIMMING PANEL SHALL BE MOUNTED SO THAT LINE (MAINS) VOLTAGE WIRING IS AT LEAST 6-FEET FROM SOUND OR ELECTRONIC EQUIPMENT AND WIRING. (TYPICAL)
7. LIGHTING LAYOUT, CIRCUITING INDICATED, CONTROL OF FIXTURES, ZONING, ETC. INDICATED ON THESE DOCUMENTS IS PERFORMANCE BASED. VERIFY EXACT REQUIREMENTS WITH OWNER, ARCHITECT AND LUTRON PRIOR TO ANY WORK.

Dimming Panels:

3. INTERNAL WIRING OF DIMMING PANELS BY THE MANUFACTURER. E.C. SHALL WIRE ALL LINE FEEDS, LOAD, AND CONTROL WIRING AS REQUIRED. LOW VOLTAGE CLASS 2 (PELV) WIRING SHALL CONNECT DIMMING PANELS TO OTHER COMPONENTS. COORDINATE WITH MANUFACTURER FOR ALL EXACT WIRING REQUIREMENTS. (TYPICAL)
4. PANELS SHALL BE COOLED VIA FREE-CONVECTION, UNAIDED BY FANS, AND CAPABLE OF CONTINUOUS OPERATION TO ALL OF THESE SPECIFICATIONS WITHIN AN AMBIENT TEMPERATURE RANGE OF 32-DEGREES FAHRENHEIT TO 104-DEGREES FAHRENHEIT. PANEL SHALL PROVIDE CAPABILITY TO ELECTRONICALLY ASSIGN EACH CIRCUIT TO ANY ZONE IN THE DIMMING SYSTEM. PANELS USING MECHANICAL SWITCHES, REWIRING OR EPROMS SHALL NOT BE ACCEPTABLE.
5. A POSITIVE AIR GAP RELAY SHALL BE EMPLOYED WITH EACH DIMMER TO ENSURE THAT THE LOAD CIRCUITS ARE OPEN WHEN THE "OFF" FUNCTION IS SELECTED AT A CONTROL STATION.
6. DIMMERS SHALL OPERATE THE FOLLOWING SOURCES/LOAD TYPES WITH A SMOOTH CONTINUOUS SQUARE LAW DIMMING CURVE: INCANDESCENT, TUNGSTEN AND MAGNETIC LOW VOLTAGE TRANSFORMER, ELECTRONIC LOW VOLTAGE TRANSFORMER, FLUORESCENT ELECTRONIC DIMMING BALLAST, NEON AND COLD-CATHODE.
7. DIMMERS SHALL BE CAPABLE OF OPERATING SOURCES ON A NON-DIM BASIS. DIMMERS SHALL BE ELECTRONICALLY ASSIGNED TO THE APPROPRIATE LOAD TYPE/DIMMING CURVE AND CAN BE REASSIGNED AT ANY TIME. UNIVERSAL-TYPE DIMMERS THAT DO NOT ADJUST THE DIMMING CURVE SHALL NOT BE ACCEPTABLE.

Control Units:

8. PRESET DIMMING CONTROL SHALL INCORPORATE AN AIR GAP SWITCH RELAY WHICH SHALL BE ACCESSIBLE WITHOUT REMOVING THE FACEPLATE.
9. PRESET DIMMING CONTROL SHALL MEET ANSI/IEEE Std. C62.41-1980, TESTED TO WITHSTAND VOLTAGE SURGES OF UP TO 6000V AND CURRENT SURGES OF UP TO 200A WITHOUT DAMAGE.
10. PRESET DIMMING CONTROL SHALL PROVIDE POWER FAILURE MEMORY.
11. FACEPLATE SHALL ATTACH USING NO VISIBLE MEANS OF ATTACHMENT.
12. PROGRAMMING OF PRESET SCENCES SHALL BE ACCOMPLISHED WITHOUT THE USE OF AN *ENTER* OR *STORE* BUTTON.
13. seeTOUCH WALL STATION CONTROLLERS SHALL BE A 4-BUTTON WITH "OFF" CONTROL UNIT.
14. PROVIDE INTEGRAL TIMECLOCK TO AUTOMATICALLY TURN LIGHTS "ON" AND "OFF" AT A PROGRAMMED TIME.
15. WHEN NORMAL UTILITY COMPANY POWER IS LOST THE EMERGENCY LIGHTING SHALL BE TURNED UP TO FULL BRIGHTNESS.

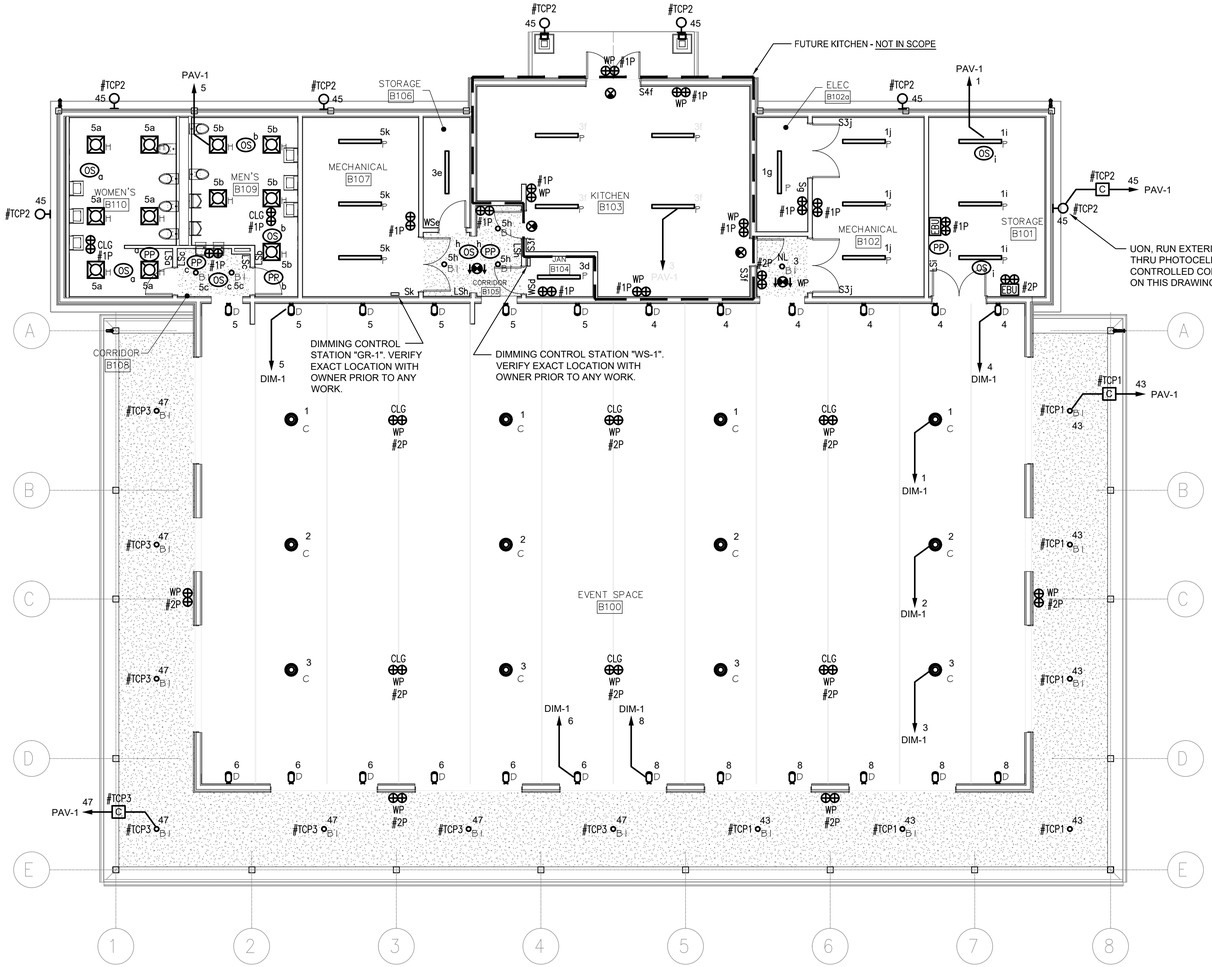

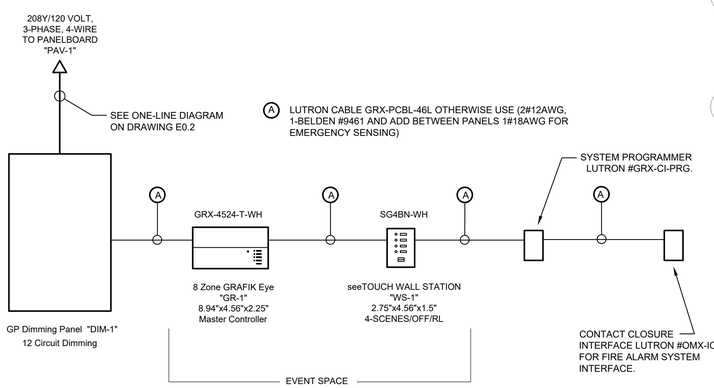

DIMMING SYSTEM ONE-LINE DIAGRAM

NOT TO SCALE

GENERAL NOTE:

REFER TO ARCHITECT'S PLANS AND SPECIFICATIONS FOR LIGHTING FIXTURE TYPES AND MAKE / MODEL NUMBERS. (TYPICAL)

1 PAVILION FLOOR PLAN - LIGHTING

E3-1

1/8" = 1'-0"

ARCHITECTS

Saccoccio & Associates, Inc.

1085 Park Avenue
Cranston, Rhode Island
02910

tel 401.942.7970
fax 401.942.7975

Consultant

ENGINEERING design SERVICES INCORPORATED
149 Pennsylvania Avenue, Warwick, RI 02889
Tel (401) 765-7500 Fax (401) 765-2964

Education Center, Animal Building, & Pavilion

ROGER WILLIAMS PARK ZOO
100 ELMWOOD AVENUE
PROVIDENCE, RI 02907

Revision Schedule	
Revision Number	Revision Date

Issued for Bid
08/19/2024

SHEET TITLE

ELECTRICAL PAVILION LOWER LEVEL FLOOR PLAN - LIGHTING

DRAWN BY:	SPC	JOB NUMBER:	18050
CHECKED BY:	RWD	DATE:	08/19/2024

B-E3.1

SHEET: OF:

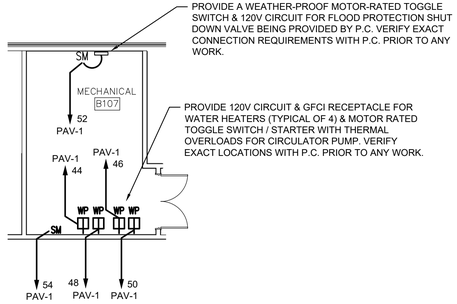

3 E3-2 PART PLAN - MECH B107
1/8" = 1'-0"

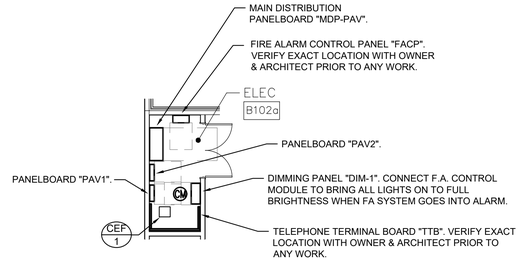

2 E3-2 PART PLAN - ELEC B102a
1/8" = 1'-0"

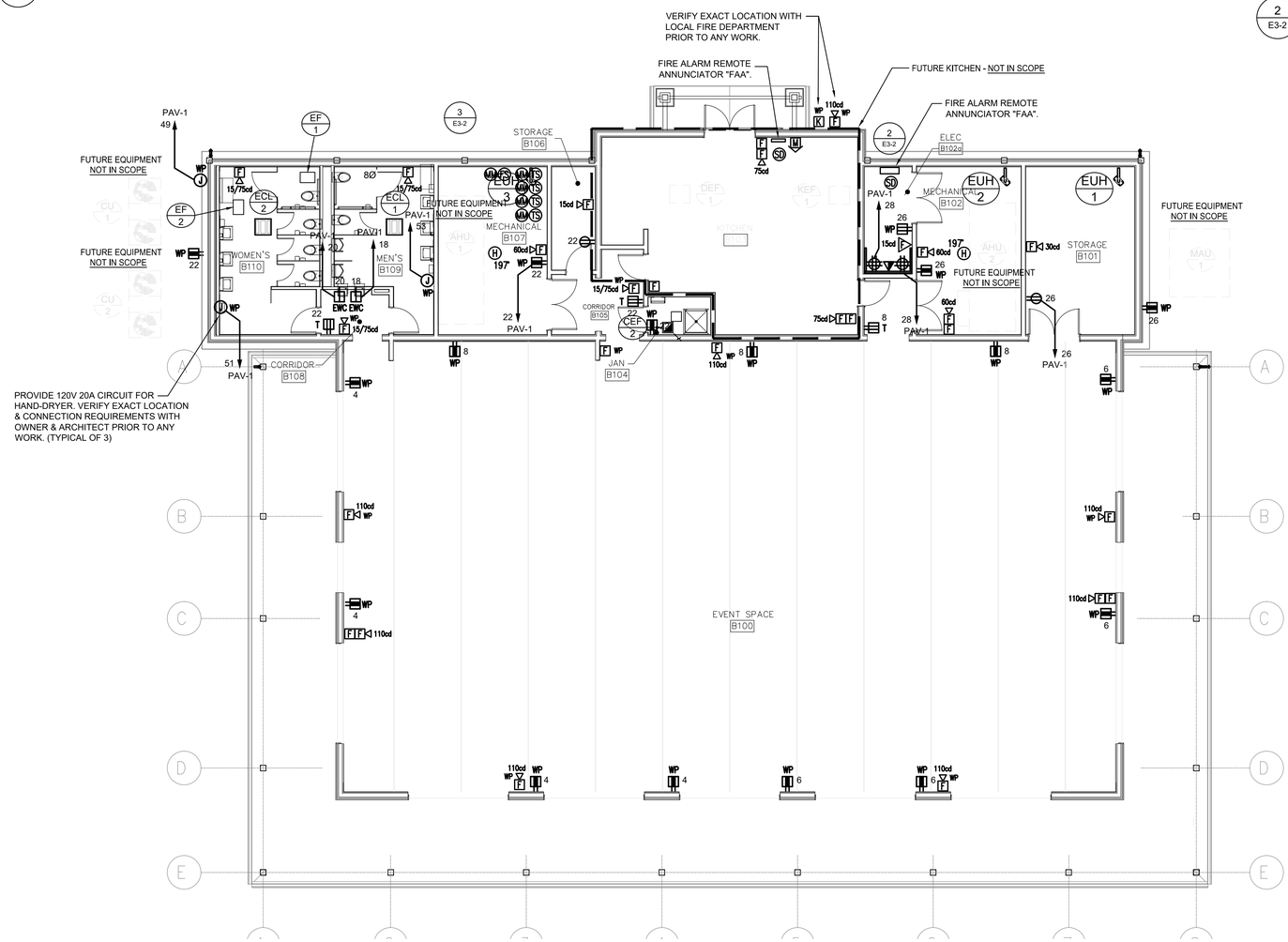

1 E3-2 PAVILION FLOOR PLAN - POWER & SIGNAL
1/8" = 1'-0"

XX # MECHANICAL EQUIPMENT CONNECTION TAG:
REFER TO "MECHANICAL EQUIPMENT ELECTRICAL CONNECTION SCHEDULE" ON DRAWING E0.5 FOR ALL CIRCUITING INFORMATION, INCLUDING BUT NOT LIMITED TO BRANCH CIRCUITING WIRING AND CONDUIT SIZE, VOLTAGE, PHASE, MOTOR CONTROL, DISC. SWITCH & CIRCUIT BREAKER.

ARCHITECTS
Saccoccio & Associates, Inc.
1085 Park Avenue
Cranston, Rhode Island
02910
tel 401.942.7970
fax 401.942.7975
Consultant
ENGINEERING DESIGN SERVICES INCORPORATED

Education Center, Animal Building, & Pavilion

ROGER WILLIAMS PARK ZOO
100 ELMWOOD AVENUE
PROVIDENCE, RI 02907

Revision Schedule	
Revision Number	Revision Date

Issued for Bid
08/19/2024

SHEET TITLE
ELECTRICAL PAVILION LOWER LEVEL FLOOR PLAN - POWER & SIGNAL

DRAWN BY:	SPC	JOB NUMBER:	18050
CHECKED BY:	RWD	DATE:	08/19/2024

B-E3.2

SHEET: OF: