# JOSLIN RECREATION CENTER - CPF RENOVATION

## 17 Hyatt St., Providence, RI 02903


Rowse Architects, Inc.
Architect of Record

2 Hampshire Street, Suite 106
Foxboro, MA 02035
P. (774) 215-0290
rowse@rowsearchitects.com

Building Engineering Resources
Consultants in Mechanical, Electrical, Plumbing , and Fire Protection Engineering
100 Midway Road - Suite 23
Cranston, RI 02920
P. (401) 942-3500
F. (401) 228-6205
ber@ber-engineering.com

Pare Corporation
Consultants in Structural Engineering

8 Blackstone Valley Place
Lincoln, RI 02865
P. (401) 334-4100
F. (401) 334-4108

Building Technology Consulting, LLC
Consultants in Audio Visual & Telecommunications

992 Bedford Street
Bridgewater, MA 02324
P. (508) 819-1550
whooley@buildingtechc.com





Owner:

City of Providence, Dept. of Public Property
25 Dorrance Street
Providence, Rhode Island 02903

## 100% Construction Documents

05/05/2025

SHEET INDEX


| Sheet Number | Sequence | Sheet Name |
|---|---|---|
| TC2.03 | | Unnamed |
| GENERAL | | |
| G0.00 | 1 of 87 | COVER SHEET |
| G0.01 | 2 of 87 | ABBREVIATIONS, LEGEND, SIGNAGE, AND SHEET INDEX |
| G0.02 | 3 of 87 | OCCUPANT LOAD PLANS |
| ARCHITECTURAL | | |
| AD1.00 | 4 of 87 | FIRST FLOOR DEMOLITION PLAN |
| AD1.01 | 5 of 87 | ROOF DEMOLITION PLAN |
| A1.00 | 6 of 87 | FIRST FLOOR PLAN |
| A1.01 | 7 of 87 | BASEMENT & SECOND FLOOR PLANS |
| A1.02 | 8 of 87 | ROOF PLAN |
| A1.03 | 9 of 87 | FIRST FLOOR REFLECTED CEILING PLAN |
| A2.00 | 10 of 87 | ENLARGED FLOOR PLANS |
| A3.00 | 11 of 87 | BUILDING ELEVATIONS |
| A5.00 | 12 of 87 | PLAN DETAILS |
| A5.01 | 13 of 87 | PLAN DETAILS |
| A5.02 | 14 of 87 | CEILING DETAILS |
| A5.03 | 15 of 87 | ROOF DETAILS |
| A6.00 | 16 of 87 | DOOR SCHEDULE |
| A6.01 | 17 of 87 | INTERIOR ALUMINIUM FRAMES |
| A6.02 | 18 of 87 | WINDOW SCHEDULE & DETAILS |
| A6.03 | 19 of 87 | ROOM FINISH SCHEDULE |
| A7.00 | 20 of 87 | INTERIOR ELEVATIONS |
| A8.00 | 21 of 87 | MILLWORK DETAILS |
| A8.01 | 22 of 87 | MILLWORK DETAILS |
| A8.02 | 23 of 87 | MILLWORK DETAILS |
| STRUCTURAL | | |
| S0.01 | 24 of 87 | STRUCTURAL NOTES |
| S1.00 | 25 of 87 | SECOND FLOOR FRAMING AND DETAILS |
| S1.01 | 26 of 87 | GYMNASIUM ROOF FRAMING PLAN AND DETAILS |
| MECHANICAL | | |
| M0.01 | 27 of 87 | MECHANICAL LEGEND, NOTES |
| M0.02 | 28 of 87 | MECHANICAL SCHEDULES |
| MD1.00 | 29 of 87 | MECHANICAL FIRST FLOOR DEMOLITION PLAN |
| MD1.01 | 30 of 87 | MECHANICAL BASEMENT & SECOND FLOOR DEMOLITION PART PLANS |
| MD1.02 | 31 of 87 | MECHANICAL ROOF DEMOLITION PLAN |
| M1.00 | 32 of 87 | MECHANICAL FIRST & SECOND FLOOR RENOVATION PART PLANS |
| M1.01 | 33 of 87 | MECHANICAL FIRST FLOOR PIPING PLAN |
| M1.02 | 34 of 87 | MECHANICAL RENOVATION ROOF PLAN |
| M2.00 | 35 of 87 | MECHANICAL DETAILS |
| M2.01 | 36 of 87 | MECHANICAL DETAILS I |
| PLUMBING | | |
| P0.01 | 37 of 87 | PLUMBING LEGEND, NOTES & SCHEDULES |
| PD1.00 | 38 of 87 | PLUMBING BASEMENT DEMOLITION FLOOR PLANS |
| PD1.01 | 39 of 87 | PLUMBING FIRST FLOOR DEMOLITION PLAN - SANITARY, WASTE, VENT & STORM |
| PD1.02 | 40 of 87 | PLUMBING FIRST FLOOR DEMOLITION PLAN - DOMESTIC WATER |
| P1.00 | 41 of 87 | PLUMBING BASEMENT FLOOR PLANS |
| P1.01 | 42 of 87 | PLUMBING FIRST FLOOR PLAN - SANITARY, WASTE, VENT & STORM |
| P1.02 | 43 of 87 | PLUMBING FIRST FLOOR PLAN - DOMESTIC WATER |
| P2.00 | 44 of 87 | PLUMBING DETAILS |
| FIRE PROTECTION | | |
| FP0.01 | 45 of 87 | FIRE PROTECTION LEGEND, NOTES, & DETAILS |
| FP0.02 | 46 of 87 | FIRE PROTECTION DETAILS |
| FPD1.00 | 47 of 87 | FIRE PROTECTION FIRST FLOOR DEMOLITION PLAN |
| FP1.00 | 48 of 87 | FIRE PROTECTION FIRST FLOOR PLAN |
| ELECTRICAL | | |
| E0.00 | 49 of 87 | ELECTRICAL LEGEND, NOTES, & ABBREVIATIONS |
| ES1.00 | 50 of 87 | ELECTRICAL SITE PLAN |
| E2.00 | 51 of 87 | ELECTRICAL POWER RISER DIAGRAM & DETAILS |
| ES1.01 | 52 of 87 | ELECTRICAL DETAILS |
| ES1.02 | 53 of 87 | ELECTRICAL DETAILS |
| ED1.00 | 54 of 87 | ELECTRICAL FIRST FLOOR DEMOLITION PLAN - LIGHTING |
| ED1.01 | 55 of 87 | ELECTRICAL FIRST FLOOR DEMOLITION PLAN - POWER |
| ED1.02 | 56 of 87 | ELECTRICAL ROOF DEMOLITION PLAN |
| E1.00 | 57 of 87 | ELECTRICAL FIRST FLOOR PLAN - LIGHTING |
| E1.01 | 58 of 87 | ELECTRICAL FIRST FLOOR PLAN - POWER |
| E1.02 | 59 of 87 | ELECTRICAL ROOF PLAN |
| E2.01 | 60 of 87 | ELECTRICAL POWER RISER DIAGRAM & DETAILS |
| FIRE ALARM | | |
| FA0.00 | 61 of 87 | FIRE ALARM LEGEND, NOTES, & ABBREVIATIONS |
| FAD1.00 | 62 of 87 | FIRE ALARM FIRST FLOOR DEMOLITION PLAN |
| FA1.00 | 63 of 87 | FIRE ALARM FIRST FLOOR PLAN |
| SECURITY | | |
| SE0.01 | 64 of 87 | SECURITY LEGEND AND NOTES SHEET |
| SEC1.00 | 65 of 87 | SECURITY FIRST FLOOR PLAN |
| SEC1.01 | 66 of 87 | SECURITY BASEMENT AND SECOND FLOOR PLANS |
| SEC2.00 | 67 of 87 | SECURITY BASEMENT AND SECOND FLOOR PLANS |
| AUDIO VISUAL | | |
| AV0.01 | 68 of 87 | AUDIO/VISUAL LEGEND AND NOTES SHEET |
| AV1.00 | 69 of 87 | AUDIO/VISUAL FIRST FLOOR PLAN |
| AV1.01 | 70 of 87 | AUDIO/VISUAL SECOND FLOOR PLAN |
| AV2.00 | 71 of 87 | AUDIO/VISUAL DETAILS SHEET |
| AV2.01 | 72 of 87 | AUDIO/VISUAL DETAILS SHEET |
| AV2.02 | 73 of 87 | AUDIO/VISUAL DETAILS SHEET |
| AV2.03 | 74 of 87 | AUDIO/VISUAL DETAILS SHEET |
| AV2.04 | 75 of 87 | AUDIO/VISUAL DETAILS SHEET |
| AV2.05 | 76 of 87 | AUDIO/VISUAL DETAILS SHEET |
| AV2.06 | 77 of 87 | AUDIO/VISUAL DETAILS SHEET |
| AV2.07 | 78 of 87 | AUDIO/VISUAL DETAILS SHEET |
| AV2.08 | 79 of 87 | AUDIO/VISUAL DETAILS SHEET |
| AV2.09 | 80 of 87 | AUDIO/VISUAL DETAILS SHEET |
| AV2.10 | 81 of 87 | AUDIO/VISUAL DETAILS SHEET |
| TELECOM | | |
| TC0.01 | 82 of 87 | TELECOM LEGEND & NOTES SHEET |
| TC1.00 | 83 of 87 | TELECOM FIRST FLOOR PLAN |
| TC1.01 | 84 of 87 | TELECOM BASEMENT AND SECOND FLOOR PLANS |
| TC2.00 | 85 of 87 | TELECOM DETAILS SHEET |
| TC2.01 | 86 of 87 | TELECOM PART PLANS |
| TC2.02 | 87 of 87 | TELECOM DETAILS SHEET |



400 Massasoit Avenue
Suite 300, Second Floor
East Providence, Rhode Island
p: (401) 351-0020

2 Hampshire Street
Suite 106, First Floor
Foxboro, Massachusetts
p: (774) 215-0290

rowse@rowsearchitects.com


JOSLIN RECREATION CENTER - CPF RENOVATION
17 Hyatt St., Providence, RI 02903
Owner: City of Providence, Dept. of Public Property, 25 Dorrance Street, Providence, Rhode Island 02903

SET NUMBER
05/05/2025

# ABBREVIATIONS:

| | |
|---|---|
| A/C | AIR CONDITION |
| ACT | ACOUSTICAL TILE |
| AFF | ABOVE FINISH FLOOR |
| ALT | ALTERNATE |
| ALUM | ALUMINUM |
| ANC BLT | ANCHOR BOLT |
| APPROX | APPROXIMATE |
| ARCH | ARCHITECT |
| ARGB | ABUSE RESISTANT GB |
| ASPH | ASPHALT |
| BC | BASE CABINET |
| BD | BOARD |
| BITUM | BITUMINOUS |
| BLDG | BUILDING |
| BLK | BLOCK |
| BLKG | BLOCKING |
| BM | BENCH MARK |
| BOF | BOTTOM OF FOOTING |
| BOTT | BOTTOM |
| BRG | BEARING |
| BRK | BRICK |
| BS | BRICK SHELF |
| BSMT | BASEMENT |
| C/L | CENTER LINE |
| CAB | CABINET |
| CB | CEMENT BOARD |
| CDM | CAVITY DRAINAGE MATERIAL |
| CH | CEILING HEIGHT |
| CIP | CAST IN PLACE |
| CJ | CONTROL JOINT |
| CL | CLOSET or CHAIN LINK |
| CLG | CEILING |
| CLOS | CLOSET |
| CLR | CLEAR |
| CMU | CONCRETE MASONRY UNIT |
| CNTR | COUNTER |
| CO | CASED OPENING |
| COL | COLUMN |
| COMP | COMPOSITION |
| CONC | CONCRETE |
| CONST | CONSTRUCTION |
| CONT | CONTINUOUS |
| CONV | CONVECTOR |
| COORD | COORDINATE |
| CORR | CORRIDOR |
| CPT | CARPET |
| CT | CERAMIC TILE |
| D | DRYER |
| D-PART | DEMOUNTABLE PARTITION |
| DBL | DOUBLE |
| DEMO | DEMOLITION |
| DI | DRAIN INLET |
| DIAG | DIAGONAL |
| DIAM | DIAMETER |
| DIM | DIMENSION |
| DL | DRAIN LEADER |
| DN | DOWN |
| DR | DOOR |
| DS | DOWNSPOUT |
| DTL | DETAIL |
| DW | DISHWASHER |
| DWG | DRAWING |
| EA | EACH |
| EF | EACH FACE |

| | |
|---|---|
| EIFS | EXTERIOR INSULATED FINISH SYSTEM |
| EJ | EXPANSION JOINT |
| EL | ELEVATION |
| ELEC | ELECTRIC |
| ELEV | ELEVATOR |
| EMER | EMERGENCY |
| ENCL | ENCLOSURE |
| EOC | EDGE OF CONCRETE |
| EP | ELECTRICAL PANEL |
| EPXY | EPOXY SEALING SYSTEM |
| EQ | EQUAL |
| EQUIP | EQUIPMENT |
| ER | EXISTING TO REMAIN |
| ES | EXPOSED STRUCTURE |
| EW | EACH WAY |
| EXH | EXHAUST |
| EXIST | EXISTING |
| EXP | EXPANSION |
| EXPT | EPOXY PAINT |
| EXT | EXTERIOR |
| FACP | FIRE ALARM CONTROL PANEL |
| FAK | FIRST AID KIT |
| FB | FIRE BLANKET |
| FC | FILE CABINET |
| FD | FLOOR DRAIN |
| FE | FIRE EXTINGUISHER |
| FF | FINISH FLOOR |
| FFE | FINISH FLOOR ELEVATION |
| FG | FIBERGLASS |
| FIN | FINISH |
| FLASH | FLASHING |
| FLR | FLOOR |
| FLUOR | FLUORESCENT |
| FNDN | FOUNDATION |
| FOC | FACE OF CONCRETE |
| FOF | FACE OF FINISH |
| FOM | FACE OF MASONRY |
| FOS | FACE OF STUD |
| FP | FIREPROOFING |
| FR | FIRE RETARDANT |
| FTG | FOOTING |
| FUR | FURRING |
| GA | GAUGE |
| GALV | GALVANIZED |
| GB | GRAB BAR |
| GC | GENERAL CONTRACTOR |
| GL | GLASS |
| GLAZ | GLAZED BLOCK |
| GLB | GLASS BLOCK |
| GN | GOOSENECK |
| GWB | GYPSUM WALL BOARD |
| GYP | GYPSUM WALL BOARD |
| HC | HANDICAP |
| HD | HEAVY DUTY |
| HDWR | HARDWARE |
| HM | HOLLOW METAL |
| HOR | HORIZONTAL |
| HP | HIGH POINT |
| HT | HEIGHT |
| HTR | HEATER |
| HVAC | HEATING, VENTILATING, AIR CONDITIONING |
| ID | INSIDE DIAMETER |
| INSUL | INSULATION |
| INT | INTERIOR |

| | |
|---|---|
| INV | INVERT |
| JST | JOIST |
| JT | JOINT |
| L | LENGTH |
| LAM | LAMINATE |
| LAV | LAVATORY |
| LBL | LABEL |
| LC | LEAD COATED |
| LCC | LEAD COATED COPPER |
| LLH | LONG LEG HORIZONTAL |
| LLV | LONG LEG VERTICAL |
| LP | LOW POINT |
| LSC | LIFE SAFETY CODE |
| LT | LINOLEUM TILE FLOOR |
| MAS | MASONRY |
| MAX | MAXIMUM |
| MB | MARBLE TILE |
| MC | MEDICINE CABINET |
| MDF | MEDIUM DENSITY FIBERBOARD |
| MDO | MEDIUM DENSITY OVERLAY |
| MECH | MECHANICAL |
| MFR | MANUFACTURER |
| MH | MANHOLE |
| MIN | MINIMUM |
| MIR | MIRROR |
| MISC | MISCELLANEOUS |
| ML | MATCH LINE |
| MO | MASONRY OPENING |
| MRGB | MOISTURE RESISTANT GB |
| MS | METAL STUD |
| MTD | MOUNTED |
| MTL | METAL |
| MTP | METAL TOILET PARTITION |
| MWF | MOLDED WOOD FIBERBOARD |
| MWP | MULTI-COLOR WALL PAINT |
| NA | NOT APPLICABLE |
| NIC | NOT IN CONTRACT |
| NO | NUMBER |
| NOM | NOMINAL |
| NTS | NOT TO SCALE |
| NW | NEW |
| OA | OVERALL |
| OC | ON CENTER |
| OD | OUTSIDE DIAMETER |
| OH | OPPOSITE HAND |
| OOS | OUTSIDE OF STRINGER |
| OP/CI | OWNER PROVIDED, CONTRACTOR INSTALLED |
| OPNG | OPENING |
| OSB | ORIENTED STRAND BOARD |
| OTS | OPEN TO STRUCTURE |
| OW | OPERABLE WALL |
| PART BD | PARTICLE BOARD |
| PCP | PRECAST CONCRETE PLANK |
| PERIM | PERIMETER |
| PL | PLASTER or PROPERTY LINE |
| PLAM | PLASTIC LAMINATE |
| PLAS | PLASTIC |
| PLWD | PLYWOOD |
| PMJF | PREMOLDED JOINT FILLER |
| PNT | PAINT |
| PNTD | PAINTED |

| | |
|---|---|
| PR | PAIR |
| PREFIN | PREFINISHED |
| PSF | POUNDS PER SQUARE FOOT |
| PT | PRESSURE TREATED |
| PTD | PAPER TOWEL DISPENSER |
| PTN | PARTITION |
| PVC | POLYVINYL CHLORIDE |
| PVMT | PAVEMENT |
| QT | QUARRY TILE |
| R | RADIUS or RISER |
| R & D | REMOVE & DISPOSE |
| R & R | REMOVE AND REPLACE |
| R & S | REMOVE AND SALVAGE |
| RB | RUBBER MAT |
| RD | ROOF DRAIN |
| REF | REFRIGERATOR |
| REFURB | REFURBISH |
| REINF | REINFORCEMENT |
| REQ'D | REQUIRED |
| RES | RESILIENT |
| RH | RIGHT HAND |
| RISBC | RHODE ISLAND STATE BUILDING CODE |
| RL | ROOF LADDER |
| RM | ROOM |
| RO | ROUGH OPENING |
| RT | RUBBER TILE |
| RTU | ROOF TOP UNIT |
| S | SEALANT |
| SACI | SPRAY-APPLIED CELLULOSE INSULATION |
| SCH | SCHEDULE |
| SCR | SHOWER CURTAIN ROD |
| SCW | SOLID CORE WOOD |
| SD | SOAP DISPENSER |
| SECT | SECTION |
| SF | SQUARE FEET |
| SIM | SIMILAR |
| SND | SANITARY NAPKIN DISPENSER |
| SNV | SANITARY NAPIKIN VENDOR |
| SPEC | SPECIFICATION |
| SQ | SQUARE |
| SS | STAINLESS STEEL |
| STD | STANDARD |
| STL | STEEL |
| STOR | STORAGE |
| STRUCT | STRUCTURE or STRUCTURAL |
| SUSP | SUSPENDED or SUSPENSION |
| SV | SHEET VINYL |
| T | TREAD |
| TB | TOWEL BAR |
| TBA | TO BE ABANDONED |
| TBB | TILE BACKER BOARD |
| TBD | TO BE DETERMINED |
| TBOC | TOP BACK OF CURB |
| TEL | TELEPHONE |
| THK | THICK |
| THOLD | THRESHOLD |
| TOC | TOP OF CURB |
| TOL | TOP OF LANDING |
| TOP | TOP OF PLATE |
| TOS | TOP OF STEEL |
| TOW | TOP OF WALL |
| TS | TUBULAR STEEL |
| TTD | TOILET TISSUE DISPENSER |
| TW | TO WEATHER |
| TYP | TYPICAL |
| UC | UNDERCUT |
| UND | UNDERSIDE OF DECK |
| UNO | UNLESS NOTED OTHERWISE |
| UV | UNIT VENTILATOR |
| VB | VINYL BASE |
| VCT | VINYL COMPOSITION TILE |
| VERT | VERTICAL |
| VEST | VESTIBULE |
| VIF | VERIFY IN FIELD |
| VPD | VENEER PLASTER BASE |
| VS | VENT STACK |
| VT | VINYL TREAD |
| VTS | VINYL TRANSITION STRIP |
| VWB | VINYL WALL BASE |
| VWC | VINYL WALL COVERING |
| W | WASHER |
| W/ | WITH |
| W/O | WITHOUT |
| WB | WRITING (WHITE) BOARD |
| WC | WALL CABINET |
| WD | WOOD |
| WF | WIRE FABRIC |
| WG | WIRE GLASS |
| WP | WATERPROOF(ING) |
| WS | WOOD STUD |
| WT | WEIGHT |
| WWF | WELDED WIRE FABRIC |

# LEGEND:

- WALL SECTION or DETAIL or EXTERIOR ELEVATION (SIM; X; AX.XX)
- BUILDING SECTION (SIM; X; AX.XX)
- DETAIL (X; AX.XX)
- INTERIOR ELEVATION (1; 2 A0.00 4; 3)
- WALL TYPE (X)
- DOOR TYPE or VISION PANEL (VP) (X)
- WINDOW TYPE (X)
- SPECIFIC DEMOLITION NOTE (6)
- NEW CONSTRUCTION NOTE (X)
- CHANGE IN PLANE (X)
- CHANGE IN ELEVATION
- ELEVATION or WORK POINT (WP)
- CONTROL JOINT (C.J)
- COLUMN GRID (A; 1)
- ALIGN SURFACES (ALIGN)
- REVISION MARKER (X)
- BATT INSULATION/SOUND ATTENUATION BLANKET
- RIGID/SEMI-RIGID INSULATION
- CONCRETE
- PARTICLE BOARD/MDF
- PLYWOOD/MDO
- FINISH WOOD
- WOOD STUDS/BLOCKING (DIMENSIONAL LUMBER)
- WOOD BLOCKING (NON-DIMENSIONAL LUMBER)

# GENERAL NOTES

1. ALL FIRE RATED WALLS SHALL EXTENDTIGHT TO UNDERSIDE OF FLOOR/DECK ABOVE. FIRE RATED WALLS SHALL RECEIVE FIRESTOPPING AT THEIR ENTIRE PERIMETER. ALL PENETRATIONS THROUGH FIRE RATED WALLS, FLOOR/CEILING ASSEMBLIES, ROOF/CEILING ASSEMBLIES AND DRAFTSTOPPING SHALL BE SEALED WITH AN APPROPRIATE THROUGH PENETRATION FRIRESTOP SYSTEM.
2. MAINTAIN INTEGRITY OF FIRE RATED WALKL ASSEMBLIES, NON-RATED WALLS SHALL ABUT. FIRE RATED WALL ASSEMBLIES SHALL NOT BE INTERRUPTED BY UNPROTECTED OPENINGS, RECESSED EQUIPMENT, OR CASEWORK. RECESSES AND VOIDS SHALL BE BUILT IN SUCH A MANNER AS TO INSURE CONTINUITY OF THE FIRE RATED ASSEMBLY CONSTRUCTION. ALL OPENINGS IN FIRE RATED WALLS SHALL BE PROTECTED WITH DEVICES OR MATERIALS TO MAINTAIN THE REQUIRED FIRE RATING.
3. U.N.O., ALL DIMENSIONS ARE TO FACE OF STUD, FACE OF MASONRY, FACE OF CONCRETE, OR TO THE CENTERLINE OF COLUMN AS OCCURS. IF "CLEAR" DIMENSION INDICATED CANNOT BE ACHIEVED, TIMELY NOTIFICATION SHALL BE MADE TO THE ARCHITECT SO THAT A DECISION CAN BE CONFIRMED BEFORE PROCEDDIGN WITH LAYOUT.
4. SEAL ALL OPENINGS/PENETRATIONS IN THE BUILDING ENVELOPE WITH MATERIALS COMPATIBLE WITH THE CONSTRUCTION MATERIALS.
5. REFER TO DRAWING G0.01 FOR WALL TYPES, FLOOR AND CEILING ASSEMBLIES, SYMBOLS, LEGEND AND ABBREVIATIONS.
6. ALL WALL ASSEMBLIES CONTAINING SOUND ATTENUATION BLANKET SHALL EXTEND TO UNDERSIDE OF FLOOR &/OR ROOF DECK AS OCCURS AND SHALL TERMINATE AGAINST THE DECK. INSTALL CONTINUOUS ACOUSTIC SEALANT AT THE BOTTOM EDGE OF GYPSUM BOARD WHERE IT INTERSECTS WITH THE TOP OF SLAB; TYPICAL AT EACH SIDE OF THE WALL ASSEMBLY. AT WALL ASSEMBLIES WITH MULTIPLE GYPSUM BOARD LAYERS ON EITHER SIDE OF THE WALL ASSEMBLY; INSTALL THE SEALANT AT THE PERIMETER OF THE INNER MOST GYPSUM BOARD LAYER LOCATION.
7. MAINTAIN THE CONTINUITY OF THE EXTERIOR WALL AIR BARRIER SYSTEM. - INTERRUPTIONS IN THE SYSTEM ARE PROHIBITED. - TERMINATE THE SYSTEM AT ALL FACADE FENESTRATIONS, AND BASE OF WALL CONDITIONS AS INDICATED ON THE DESIGNATED DRAWING DETAILS OR IN ACCORDANCE WITH THE SYSTEM MANUFACTURERS WRITTEN INSTRUCTIONS.
8. PROVIDE WOOD BLOCKING AT ALL WALL MOUNTED DOOR STOPS.
9. PROVIDE WOOD BLOCKING FOR MOUNTING OF ALL GRAB BARS AND TOWEL BARS.
10. ALL FURNITURE SHOWN ON THE DRAWINGS IS FOR REFERENCE ONLY AND IS NOT INCLUDED WITHIN THE SCOPE OF WORK.
11. REFER TO DRAWING G0.02 FOR BUILDING CODE OCCUPANT LOAD FLOOR PLANS.
12. DRAWINGS SHALL NOT BE SCALED; USE WRITTEN DIMENSIONS ONLY.
13. U.N.O., FLOOR &/OR ROOF ELEVATIONS, WHERE INDICATED, REFERS TO THE TOP OF CONCRETE SLAB &/OR DECK AS OCCURS.
14. PROVIDE ABUSE RESISTANT GYPSUM WALL BOARD AT ALL HALLWAY LOCATIONS, MINIMUM 8' HIGH.

## Wall Types

3" = 1'-0"

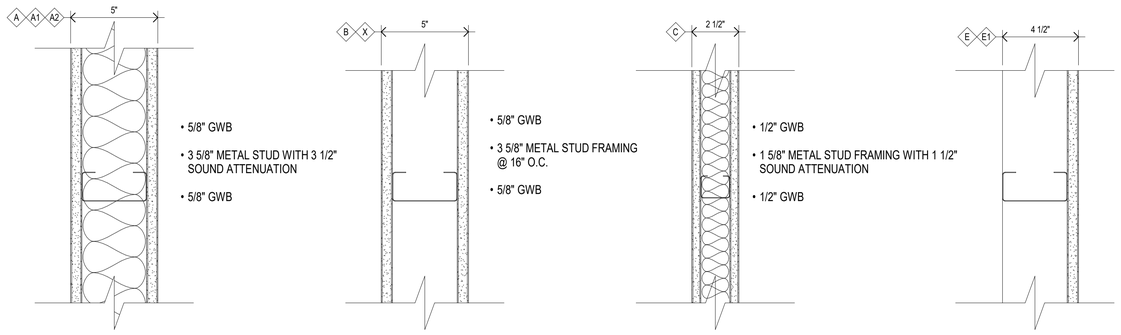


A 5/8" GYPSUM BOARD BOTH SIDES

A1 5/8" MOISTURE RESISTANT GYPSUM BOARD BOTH SIDES

A2 5/8" GYPSUM BOARD ON ONE SIDE AND 5/8" MOISTURE RESISTANT GYPSUM BOARD ON THE WET SIDE

B 5/8" GYPSUM BOARD BOTH SIDES

X 5/8" TYPE-X GYPSUM BOARD BOTH SIDES

C 5/8" GYPSUM BOARD BOTH SIDES

## Signage

3" = 1'-0"




1A

TYPE - 1A
SIZE: 7" WIDE x 8" HIGH x 080 MATTE CLEAR BACKSPRAYED
COLORS: TBD
SYMBOLS: 3" AND 2 1/2" DIRECT PRINT
COPY: 5/8" WHITE RAISED HELVETICA MEDIUM STYLE LETTERS AND CLEAR BRAILLE
NUMERALS: 3/4" WHITE RAISED NUMERAL AND CLEAR BRAILLE DOTS
MOUNTING: DOUBLE FACED TAPE




1B

TYPE - 1B
SIZE: 7" WIDE x 11" HIGH x 080 MATTE CLEAR BACKSPRAYED
COLORS: TBD
SYMBOLS: 3" AND 2 1/2" DIRECT PRINT
COPY: 5/8" WHITE RAISED HELVETICA MEDIUM STYLE LETTERS AND CLEAR BRAILLE
NUMERALS: 3/4" WHITE RAISED NUMERAL AND CLEAR BRAILLE DOTS
MOUNTING: DOUBLE FACED TAPE

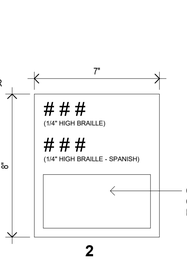


2

TYPE - 2
SIZE: 7" WIDE x 8" HIGH x 080 MATTE CLEAR BACKSPRAYED
COLORS: TBD
SYMBOLS: 5/8" WHITE RAISED HELVETICA MEDIUM STYLE
COPY: 5/8" WHITE RAISED HELVETICA MEDIUM STYLE LETTERS AND CLEAR BRAILLE DOTS
NUMERALS: 3/4" WHITE RAISED NUMERAL AND CLEAR BRAILLE DOTS
MOUNTING: DOUBLE FACED TAPE

# JOSLIN RECREATION CENTER - CPF RENOVATION

17 Hyatt St., Providence, RI 02903

Owner:
City of Providence, Dept. of Public Property
25 Dorrance Street
Providence, Rhode Island 02903


ROWSE Architects
400 Massasoit Avenue
Suite 300, Second Floor
East Providence, Rhode Island
p. (401) 331-9200

2 Hampshire Street
Suite 106, First Floor
Foxboro, Massachusetts
p. (774) 215-0290
rowse@rowsearchitects.com



OWNERSHIP AND USE OF DOCUMENTS, DRAWINGS AND SPECIFICATIONS AS INSTRUMENTS OF PROFESSIONAL SERVICE, ARE, AND SHALL REMAIN, THE PROPERTY OF THE ARCHITECT. THESE DOCUMENTS ARE NOT TO BE USED, IN WHOLE OR IN PART, FOR ANY OTHER PROJECTS OR PURPOSES, OR BY ANY OTHER PARTIES THAN THOSE PROPERLY AUTHORIZED BY CONTRACT WITHOUT THE EXPRESS AUTHORIZATION OF THE ARCHITECT.


## GENERAL NOTES

1. CONTRACTOR SHALL VISIT SITE, PRIOR TO BID, AND CAREFULLY INVESTIGATE AND EXAMINE THE AREA OF WORK SO AS TO SATISFY HIMSELF AS TO THE NATURE AND LOCATION OF THE WORK, CONTRACTOR TO NOTE THE CHARACTER, QUALITY, QUANTITIES OF MATERIALS REQUIRED AND DIFFICULTIES TO BE ENCOUNTERED, THE KIND AND EXTENT OF EQUIPMENT AND FACILITIES NEEDED FOR PERFORMANCE OF THE WORK AND OTHER ITEMS WHICH MAY, IN ANY WAY, AFFECT THE WORK OR CONTRACTOR'S PERFORMANCE.
2. DRAWINGS DO NOT INCLUDE NECESSARY COMPONENTS FOR CONSTRUCTION SAFETY.

**Date:** 05/05/2025
**Drawn by:** Author **Proj. Mgr.:** Checker

**Revisions**

| No. | Date | Description |
|---|---|---|
| | | |

ABBREVIATIONS, LEGEND, SIGNAGE, AND SHEET INDEX

# G0.01

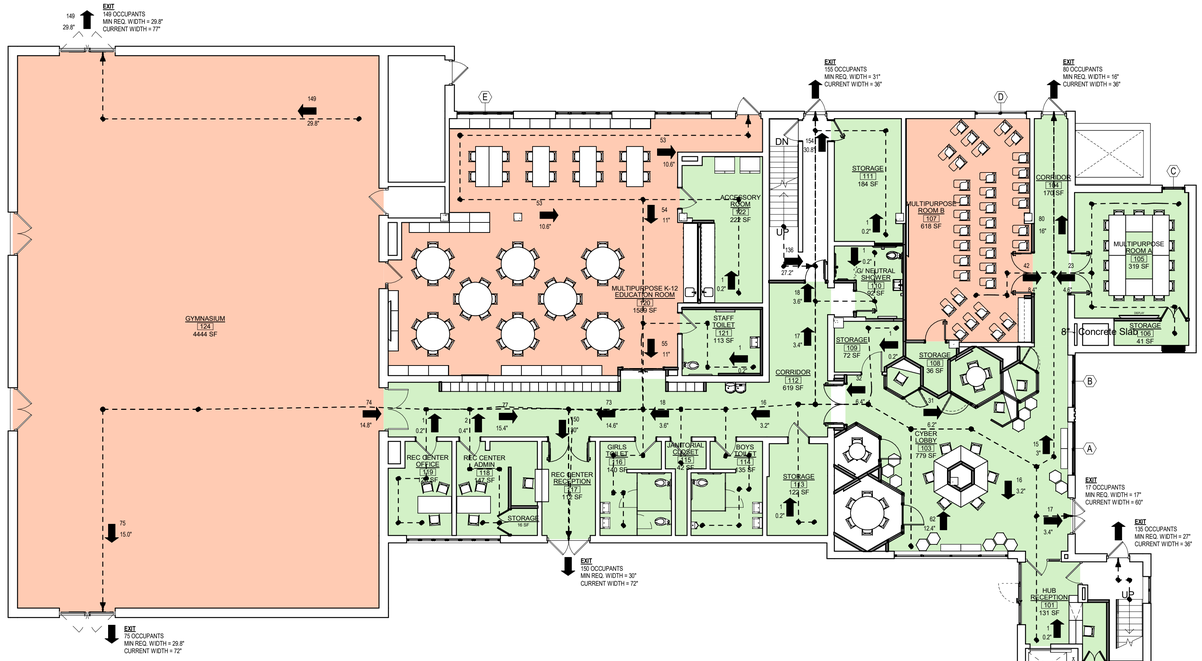


1 G0.02 First Floor Occupant Load/Egress Plan

3/32" = 1'-0"




2 G0.02 Second Floor Occupant Load/Egress Plan

3/32" = 1'-0"

ASSEMBLY A-3
4,444 S.F. Gross

BUSINESS B
2,998 S.F. Gross @ 1st Floor
3,032 S.F. Gross @ 2nd Floor

## OCCUPANCY LOADS

| Number | Name | Occupancy | Area | Occupancy Factor | Occupancy Load | Egress Width Total |
|---|---|---|---|---|---|---|
| 101 | HUB RECEPTION | BUSINESS B | 131 SF | 150 | 1 | 0' - 0 3/16" |
| 102 | STORAGE | BUSINESS B | 32 SF | 300 | 1 | 0' - 0 3/16" |
| 103 | CYBER LOBBY | BUSINESS B | 779 SF | 15 | 52 | 0' - 10 13/32" |
| 104 | CORRIDOR | BUSINESS B | 170 SF | 0 | | |
| 105 | MULTIPURPOSE ROOM A | BUSINESS B | 319 SF | 15 | 22 | 0' - 4 13/32" |
| 106 | STORAGE | BUSINESS B | 41 SF | 300 | 1 | 0' - 0 3/16" |
| 107 | MULTIPURPOSE ROOM B | ASSEMBLY A-3 | 618 SF | 15 | 42 | 0' - 8 13/32" |
| 108 | STORAGE | BUSINESS B | 36 SF | 300 | 1 | 0' - 0 3/16" |
| 109 | STORAGE | BUSINESS B | 72 SF | 300 | 1 | 0' - 0 3/16" |
| 110 | G/ NEUTRAL SHOWER | BUSINESS B | 92 SF | 100 | 1 | 0' - 0 3/16" |
| 111 | STORAGE | BUSINESS B | 184 SF | 300 | 1 | 0' - 0 3/16" |
| 112 | CORRIDOR | BUSINESS B | 619 SF | 0 | | |
| 113 | STORAGE | BUSINESS B | 122 SF | 300 | 1 | 0' - 0 3/16" |
| 114 | BOYS TOILET | BUSINESS B | 135 SF | 100 | 2 | 0' - 0 13/32" |
| 115 | JANITORIAL CLOSET | BUSINESS B | 42 SF | 300 | 1 | 0' - 0 3/16" |
| 116 | GIRLS TOILET | BUSINESS B | 140 SF | 100 | 2 | 0' - 0 13/32" |
| 117 | REC CENTER RECEPTION | BUSINESS B | 112 SF | 150 | 1 | 0' - 0 3/16" |
| 118 | REC CENTER ADMIN | BUSINESS B | 147 SF | 150 | 1 | 0' - 0 3/16" |
| 119 | REC CENTER OFFICE | BUSINESS B | 123 SF | 150 | 1 | 0' - 0 3/16" |
| 120 | MULTIPURPOSE K-12 EDUCATION ROOM | ASSEMBLY A-3 | 1589 SF | 15 | 106 | 1' - 9 3/16" |
| 121 | STAFF TOILET | BUSINESS B | 113 SF | 150 | 1 | 0' - 0 3/16" |
| 122 | ACCESSORY ROOM | BUSINESS B | 222 SF | 300 | 1 | 0' - 0 3/16" |
| 124 | GYMNASIUM | ASSEMBLY A-3 | 4444 SF | 15 | 297 | 4' - 11 13/32" |

# JOSLIN RECREATION CENTER - CPF RENOVATION

17 Hyatt St., Providence, RI 02903

Owner:
City of Providence, Dept. of Public Property
25 Dorrance Street
Providence, Rhode Island 02903

ROWSE Architects
400 Massasoit Avenue
Suite 300, Second Floor
East Providence, Rhode Island
p. (401) 331-9200

2 Hampshire Street
Suite 106, First Floor
Foxboro, Massachusetts
p. (774) 215-0290
rowse@rowsearchitects.com

OWNERSHIP AND USE OF DOCUMENTS, DRAWINGS AND SPECIFICATIONS AS INSTRUMENTS OF PROFESSIONAL SERVICE, ARE, AND SHALL REMAIN, THE PROPERTY OF THE ARCHITECT. THESE DOCUMENTS ARE NOT TO BE USED, IN WHOLE OR IN PART, FOR ANY OTHER PROJECTS OR PURPOSES, OR BY ANY OTHER PARTIES THAN THOSE PROPERLY AUTHORIZED BY CONTRACT WITHOUT THE EXPRESS AUTHORIZATION OF THE ARCHITECT.

## GENERAL NOTES

1. CONTRACTOR SHALL VISIT SITE, PRIOR TO BID, AND CAREFULLY INVESTIGATE AND EXAMINE THE AREA OF WORK SO AS TO SATISFY HIMSELF AS TO THE NATURE AND LOCATION OF THE WORK. CONTRACTOR TO NOTE THE CHARACTER, QUALITY, QUANTITIES OF MATERIALS REQUIRED AND DIFFICULTIES TO BE ENCOUNTERED, THE KIND AND EXTENT OF EQUIPMENT AND FACILITIES NEEDED FOR PERFORMANCE OF THE WORK AND OTHER ITEMS WHICH MAY, IN ANY WAY, AFFECT THE WORK OR CONTRACTOR'S PERFORMANCE.

2. DRAWINGS DO NOT INCLUDE NECESSARY COMPONENTS FOR CONSTRUCTION SAFETY.

**Date:** 05/05/2025

**Drawn by:** Author **Proj. Mgr.:** Checker

**Revisions**

| No. | Date | Description |
|---|---|---|
| | | |

OCCUPANT LOAD PLANS

# G0.02




1 First Floor Demolition Plan
AD1.00 1/8" = 1'-0"

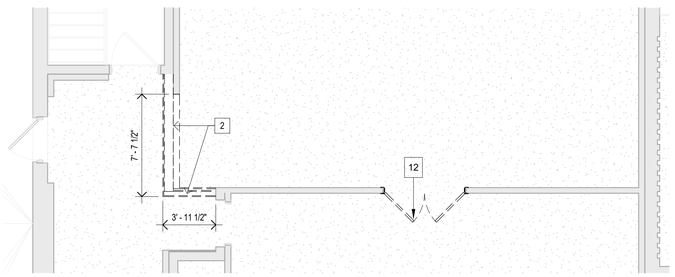


2 Second Floor Partial Demolition Plan
AD1.00 3/16" = 1'-0"

## DEMOLITION NOTES

1. REMOVE AND DISPOSE OF WALL ASSEMBLY IN ITS ENTIRETY, INCLUDING BUT NOT LIMITED TO ALL DOORS, FRAMES, AND TRIM, AS REQ'D FOR NEW WORK. REMOVE AND MAKE SAFE ALL ELECTRICAL COMPONENTS REQ'D FOR NEW WORK.
2. REMOVE AND DISPOSE OF PORTION OF EXISTING WALL ASSEMBLY, AS REQ'D FOR NEW WORK.
3. SHOP BLAST TO REMOVE EXISTING EPOXY FLOORING SYSTEM, INCLUDING ALL WALL BASE AS OCCURS, TO PREPARE SURFACE TO RECEIVE NEW FLOORING, PER MANUFACTURER'S RECOMMENDATIONS.
4. REMOVE AND DISPOSE OF EXISTING VCT AND VINYL WALL BASE AS OCCURS. PREPARE SURFACE TO RECEIVE NEW FLOORING, PER MANUFACTURER'S RECOMMENDATIONS.
5. REMOVE AND DISPOSE OF EXISTING CERAMIC TILE FLOORING ASSEMBLY. PREPARE SURFACE TO RECEIVE NEW FLOORING, PER MANUFACTURER'S RECOMMENDATIONS.
6. REMOVE AND DISPOSE OF EXISTING PLYWOOD CEILING ASSEMBLY. TEMPORARILY HANG AND SUPPORT ALL CONDUIT, PIPING, AND LIGHTING AS REQ'D FOR NEW WORK. PROVIDE TEMPORARY LIGHTING WHERE REQUIRED.
7. REMOVE AND DISPOSE OF EXISTING 2X2 ACT CEILING ASSEMBLY; REMOVE AND MAKE SAFE ALL EXISTING LIGHT FIXTURES.
8. REMOVE AND DISPOSE OF PLUMBING FIXTURES, TOILET ACCESSORIES, AND TOILET PARTITIONS IN ITS ENTIRETY. REFER TO PLUMBING DRAWINGS FOR ADDITIONAL INFORMATION.
9. REMOVE AND DISPOSE OF WINDOW IN FILLED MATERIAL, CONSISTING OF PLYWOOD AND MASONRY. PREPARE EXISTING OPENING TO RECEIVE NEW WINDOW.
10. REMOVE AND DISPOSE OF EXISTING INTERIOR RECEPTION WINDOW. PREPARE OPENING TO RECEIVE NEW COUNTER.
11. REMOVE AND DISPOSE OF EXISTING COUNTER AND WINDOW ASSEMBLY IN MULTIPURPOSE ROOM.
12. REMOVE AND DISPOSE OF EXISTING DOOR AND FRAME; PREPARE OPENING FOR NEW WORK AS REQ'D.
13. REMOVE EXISTING SCUPPER AND DOWNSPOUT.
14. REMOVE EXISTING EXHUAST FAN AND ROOF CURB.
15. REMOVE EXISTING VENTILATOR AND ROOF CURB.
16. REMOVE EXISTING DRAIN.
17. REMOVE EXISTING VENT STACK.
18. REMOVE AND SALVAGE EXIST ROOF HATCH ASSEMBLY FOR RE-INSTALLATION.
19. REMOVE EXISTING ROOF ASSEMBLY AND INSULATION IN ITS ENTIRETY TO EXISTING ROOF DECK AS OCCURS.

# JOSLIN RECREATION CENTER - CPF RENOVATION

17 Hyatt St., Providence, RI 02903

Owner:
City of Providence, Dept. of Public Property
25 Dorrance Street
Providence, Rhode Island 02903

ROWSE Architects
400 Massasoit Avenue
Suite 300, Second Floor
East Providence, Rhode Island
p. (401) 331-9200

2 Hampshire Street
Suite 106, First Floor
Foxboro, Massachusetts
p. (774) 215-0290

rowse@rowsearchitects.com

**OWNERSHIP AND USE OF DOCUMENTS, DRAWINGS AND SPECIFICATIONS AS INSTRUMENTS OF PROFESSIONAL SERVICE, ARE, AND SHALL REMAIN, THE PROPERTY OF THE ARCHITECT. THESE DOCUMENTS ARE NOT TO BE USED, IN WHOLE OR IN PART, FOR ANY OTHER PROJECTS OR PURPOSES, OR BY ANY OTHER PARTIES THAN THOSE PROPERLY AUTHORIZED BY CONTRACT WITHOUT THE EXPRESS AUTHORIZATION OF THE ARCHITECT.**

## GENERAL NOTES

1. CONTRACTOR SHALL VISIT SITE, PRIOR TO BID, AND CAREFULLY INVESTIGATE AND EXAMINE THE AREA OF WORK SO AS TO SATISFY HIMSELF AS TO THE NATURE AND LOCATION OF THE WORK. CONTRACTOR TO NOTE THE CHARACTER, QUALITY, QUANTITIES OF MATERIALS REQUIRED AND DIFFICULTIES TO BE ENCOUNTERED, THE KIND AND EXTENT OF EQUIPMENT AND FACILITIES NEEDED FOR PERFORMANCE OF THE WORK AND OTHER ITEMS WHICH MAY, IN ANY WAY, AFFECT THE WORK OR CONTRACTOR'S PERFORMANCE.
2. DRAWINGS DO NOT INCLUDE NECESSARY COMPONENTS FOR CONSTRUCTION SAFETY.

**Date:** 05/05/2025
**Drawn by:** JMA **Proj. Mgr.:** BEG

**Revisions**

| No. | Date | Description |
|---|---|---|
| 1 | | |

FIRST FLOOR DEMOLITION PLAN

AD1.00

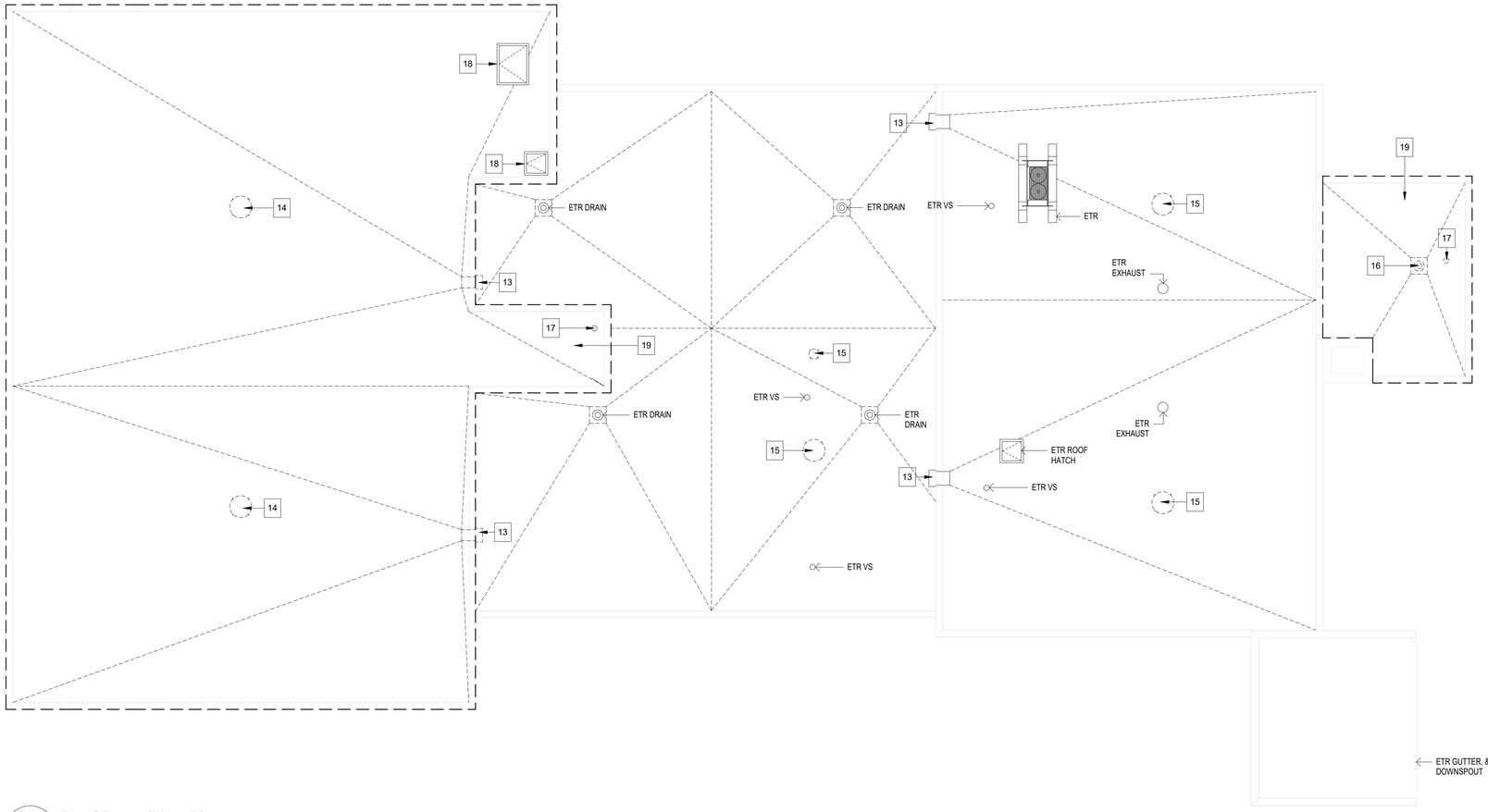


1 Roof Demolition Plan
AD1.01 1/8" = 1'-0"

## DEMOLITION NOTES

1. REMOVE AND DISPOSE OF WALL ASSEMBLY IN ITS ENTIRETY, INCLUDING BUT NOT LIMITED TO ALL DOORS, FRAMES, AND TRIM, AS REQ'D FOR NEW WORK. REMOVE AND MAKE SAFE ALL ELECTRICAL COMPONENTS REQ'D FOR NEW WORK.
2. REMOVE AND DISPOSE OF PORTION OF EXISTING WALL ASSEMBLY, AS REQ'D FOR NEW WORK.
3. SHOP BLAST TO REMOVE EXISTING EPOXY FLOORING SYSTEM, INCLUDING ALL WALL BASE AS OCCURS, TO PREPARE SURFACE TO RECEIVE NEW FLOORING, PER MANUFACTURER'S RECOMMENDATIONS.
4. REMOVE AND DISPOSE OF EXISTING VCT AND VINYL WALL BASE AS OCCURS. PREPARE SURFACE TO RECEIVE NEW FLOORING, PER MANUFACTURER'S RECOMMENDATIONS.
5. REMOVE AND DISPOSE OF EXISTING CERAMIC TILE FLOORING ASSEMBLY. PREPARE SURFACE TO RECEIVE NEW FLOORING, PER MANUFACTURER'S RECOMMENDATIONS.
6. REMOVE AND DISPOSE OF EXISTING PLYWOOD CEILING ASSEMBLY. TEMPORARILY HANG AND SUPPORT ALL CONDUIT, PIPING, AND LIGHTING AS REQ'D FOR NEW WORK. PROVIDE TEMPORARY LIGHTING WHERE REQUIRED.
7. REMOVE AND DISPOSE OF EXISTING 2X2 ACT CEILING ASSEMBLY; REMOVE AND MAKE SAFE ALL EXISTING LIGHT FIXTURES.
8. REMOVE AND DISPOSE OF PLUMBING FIXTURES, TOILET ACCESSORIES, AND TOILET PARTITIONS IN ITS ENTIRETY. REFER TO PLUMBING DRAWINGS FOR ADDITIONAL INFORMATION.
9. REMOVE AND DISPOSE OF WINDOW IN FILLED MATERIAL, CONSISTING OF PLYWOOD AND MASONRY. PREPARE EXISTING OPENING TO RECEIVE NEW WINDOW.
10. REMOVE AND DISPOSE OF EXISTING INTERIOR RECEPTION WINDOW. PREPARE OPENING TO RECEIVE NEW COUNTER.
11. REMOVE AND DISPOSE OF EXISTING COUNTER AND WINDOW ASSEMBLY IN MULTIPURPOSE ROOM.
12. REMOVE AND DISPOSE OF EXISTING DOOR AND FRAME; PREPARE OPENING FOR NEW WORK AS REQ'D.
13. REMOVE EXISTING SCUPPER AND DOWNSPOUT.
14. REMOVE EXISTING EXHAUST FAN AND ROOF CURB.
15. REMOVE EXISTING VENTILATOR AND ROOF CURB.
16. REMOVE EXISTING DRAIN.
17. REMOVE EXISTING VENT STACK.
18. REMOVE AND SALVAGE EXIST ROOF HATCH ASSEMBLY FOR RE-INSTALLATION.
19. REMOVE EXISTING ROOF ASSEMBLY AND INSULATION IN ITS ENTIRETY TO EXISTING ROOF DECK AS OCCURS.

# JOSLIN RECREATION CENTER - CPF RENOVATION

17 Hyatt St., Providence, RI 02903

Owner:
City of Providence, Dept. of Public Property
25 Dorrance Street
Providence, Rhode Island 02903

ROWSE Architects
400 Massasoit Avenue
Suite 300, Second Floor
East Providence, Rhode Island
p. (401) 331-9200

2 Hampshire Street
Suite 106, First Floor
Foxboro, Massachusetts
p. (774) 215-0290
rowse@rowsearchitects.com

**OWNERSHIP AND USE OF DOCUMENTS, DRAWINGS AND SPECIFICATIONS AS INSTRUMENTS OF PROFESSIONAL SERVICE, ARE, AND SHALL REMAIN, THE PROPERTY OF THE ARCHITECT. THESE DOCUMENTS ARE NOT TO BE USED, IN WHOLE OR IN PART, FOR ANY OTHER PROJECTS OR PURPOSES, OR BY ANY OTHER PARTIES THAN THOSE PROPERLY AUTHORIZED BY CONTRACT WITHOUT THE EXPRESS AUTHORIZATION OF THE ARCHITECT.**

## GENERAL NOTES

1. CONTRACTOR SHALL VISIT SITE, PRIOR TO BID, AND CAREFULLY INVESTIGATE AND EXAMINE THE AREA OF WORK SO AS TO SATISFY HIMSELF AS TO THE NATURE AND LOCATION OF THE WORK. CONTRACTOR TO NOTE THE CHARACTER, QUALITY, QUANTITIES OF MATERIALS REQUIRED AND DIFFICULTIES TO BE ENCOUNTERED, THE KIND AND EXTENT OF EQUIPMENT AND FACILITIES NEEDED FOR PERFORMANCE OF THE WORK AND OTHER ITEMS WHICH MAY, IN ANY WAY, AFFECT THE WORK OR CONTRACTOR'S PERFORMANCE.
2. DRAWINGS DO NOT INCLUDE NECESSARY COMPONENTS FOR CONSTRUCTION SAFETY.

**Date:** 05/05/2025
**Drawn by:** JMA **Proj. Mgr.:** BEG

**Revisions**

| No. | Date | Description |
|---|---|---|
| | | |

ROOF DEMOLITION PLAN

# AD1.01

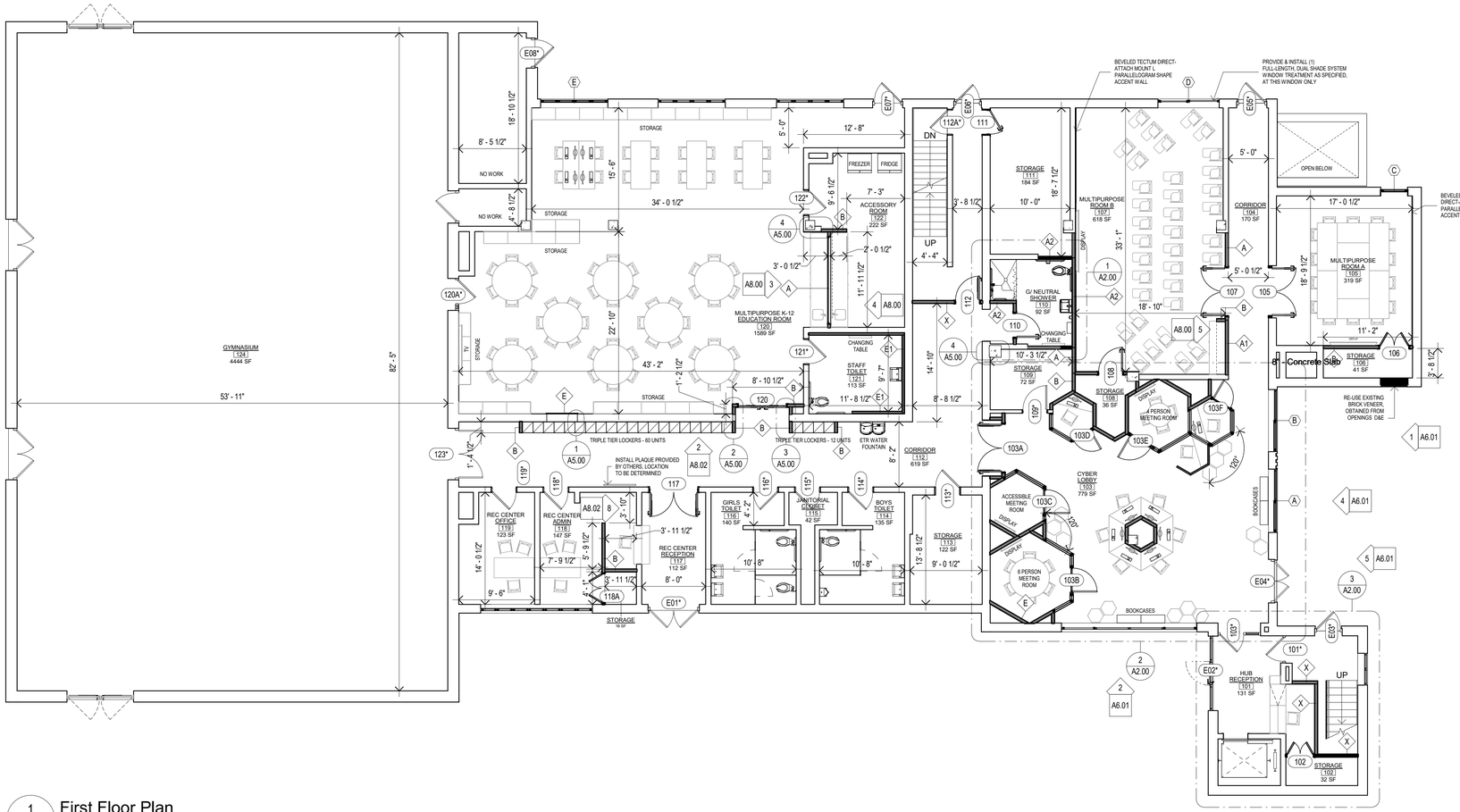


1 A1.00 First Floor Plan

1/8" = 1'-0"

NOTE:
ALL ROOMS AND SPACES TO RECEIVE INTERIOR SIGNAGE AS SPECIFIED IN SECTION 101400. REFER TO SHEET G0.01 FOR ADDITIONAL INFORMATION

# JOSLIN RECREATION CENTER - CPF RENOVATION

17 Hyatt St., Providence, RI 02903

Owner:
City of Providence, Dept. of Public Property
25 Dorrance Street
Providence, Rhode Island 02903


ROWSE Architects

400 Massasoit Avenue
Suite 300, Second Floor
East Providence, Rhode Island
p. (401) 331-9200

2 Hampshire Street
Suite 106, First Floor
Foxboro, Massachusetts
p. (774) 215-0290

rowse@rowsearchitects.com



**OWNERSHIP AND USE OF DOCUMENTS, DRAWINGS AND SPECIFICATIONS AS INSTRUMENTS OF PROFESSIONAL SERVICE, ARE, AND SHALL REMAIN, THE PROPERTY OF THE ARCHITECT. THESE DOCUMENTS ARE NOT TO BE USED, IN WHOLE OR IN PART, FOR ANY OTHER PROJECTS OR PURPOSES, OR BY ANY OTHER PARTIES THAN THOSE PROPERLY AUTHORIZED BY CONTRACT WITHOUT THE EXPRESS AUTHORIZATION OF THE ARCHITECT.**


## GENERAL NOTES

1. CONTRACTOR SHALL VISIT SITE, PRIOR TO BID, AND CAREFULLY INVESTIGATE AND EXAMINE THE AREA OF WORK SO AS TO SATISFY HIMSELF AS TO THE NATURE AND LOCATION OF THE WORK. CONTRACTOR TO NOTE THE CHARACTER, QUALITY, QUANTITIES OF MATERIALS REQUIRED AND DIFFICULTIES TO BE ENCOUNTERED, THE KIND AND EXTENT OF EQUIPMENT AND FACILITIES NEEDED FOR PERFORMANCE OF THE WORK AND OTHER ITEMS WHICH MAY, IN ANY WAY, AFFECT THE WORK OR CONTRACTOR'S PERFORMANCE.

2. DRAWINGS DO NOT INCLUDE NECESSARY COMPONENTS FOR CONSTRUCTION SAFETY.

**Date:** 05/05/2025

**Drawn by:** JA **Proj. Mgr.:** BEG

**Revisions**

| No. | Date | Description |
|---|---|---|
| | | |

FIRST FLOOR PLAN

# A1.00

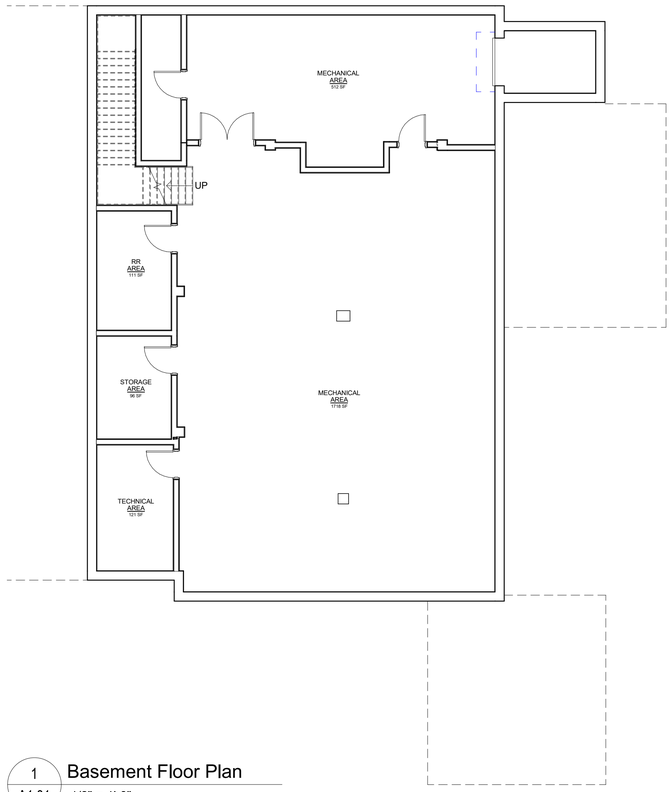


1 A1.01 Basement Floor Plan
1/8" = 1'-0"

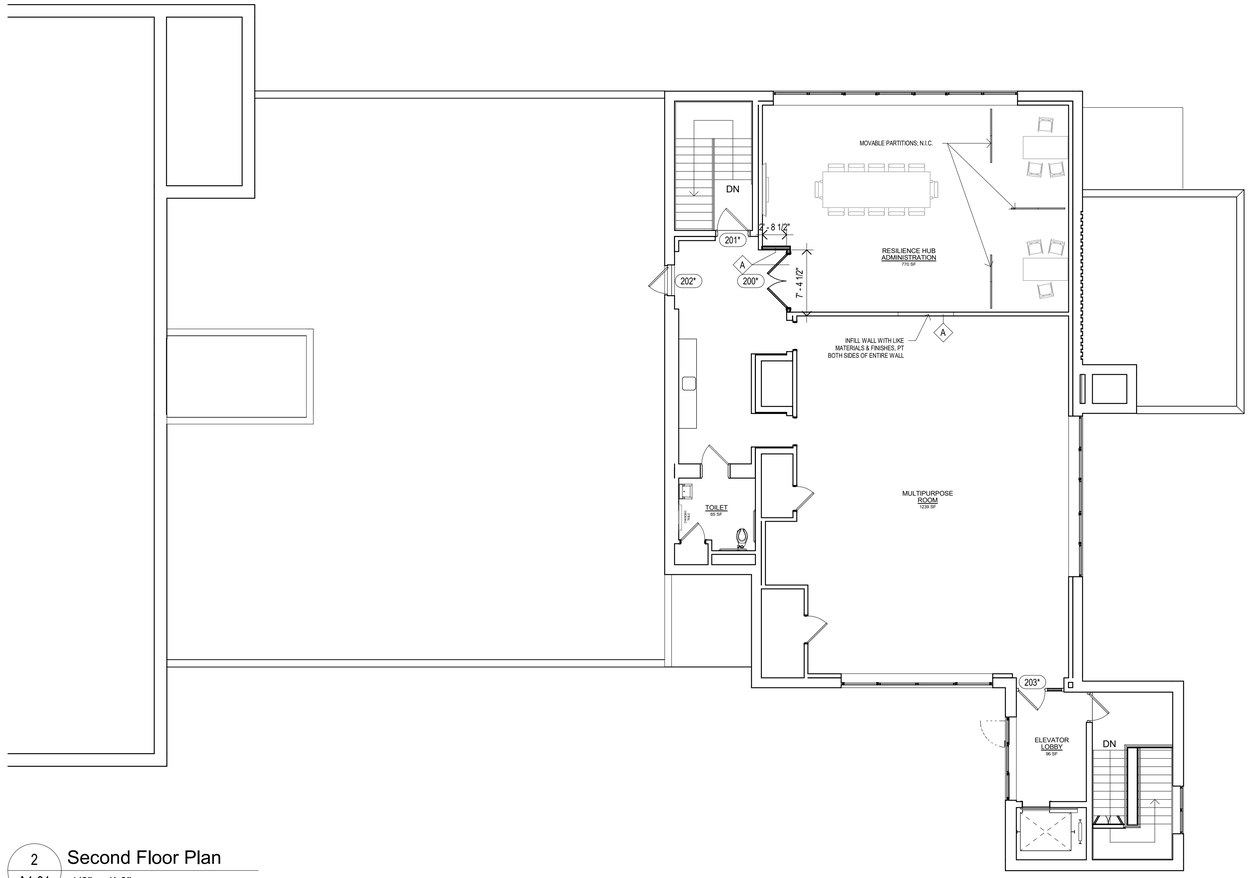


2 A1.01 Second Floor Plan
1/8" = 1'-0"

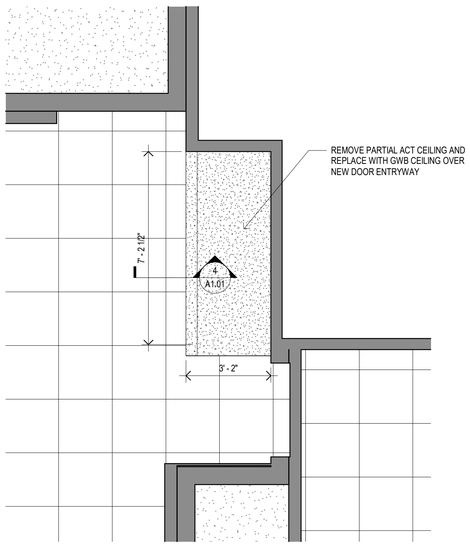


3 A1.01 2nd Floor RCP - Callout 1
3/8" = 1'-0"

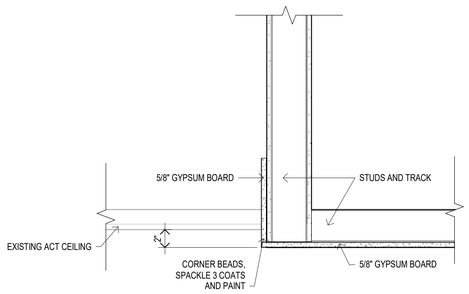


4 A1.01 ACT TO GWB TRANSITION DETAIL
1 1/2" = 1'-0"

# JOSLIN RECREATION CENTER - CPF RENOVATION

17 Hyatt St., Providence, RI 02903

Owner:
City of Providence, Dept. of Public Property
25 Dorrance Street
Providence, Rhode Island 02903


ROWSE Architects
400 Massasoit Avenue
Suite 300, Second Floor
East Providence, Rhode Island
p. (401) 331-9200

2 Hampshire Street
Suite 106, First Floor
Foxboro, Massachusetts
p. (774) 215-0290
rowse@rowsearchitects.com



**OWNERSHIP AND USE OF DOCUMENTS, DRAWINGS AND SPECIFICATIONS AS INSTRUMENTS OF PROFESSIONAL SERVICE, ARE, AND SHALL REMAIN, THE PROPERTY OF THE ARCHITECT. THESE DOCUMENTS ARE NOT TO BE USED, IN WHOLE OR IN PART, FOR ANY OTHER PROJECTS OR PURPOSES, OR BY ANY OTHER PARTIES THAN THOSE PROPERLY AUTHORIZED BY CONTRACT WITHOUT THE EXPRESS AUTHORIZATION OF THE ARCHITECT.**


## GENERAL NOTES

1. CONTRACTOR SHALL VISIT SITE, PRIOR TO BID, AND CAREFULLY INVESTIGATE AND EXAMINE THE AREA OF WORK SO AS TO SATISFY HIMSELF AS TO THE NATURE AND LOCATION OF THE WORK. CONTRACTOR TO NOTE THE CHARACTER, QUALITY, QUANTITIES OF MATERIALS REQUIRED AND DIFFICULTIES TO BE ENCOUNTERED, THE KIND AND EXTENT OF EQUIPMENT AND FACILITIES NEEDED FOR PERFORMANCE OF THE WORK AND OTHER ITEMS WHICH MAY, IN ANY WAY, AFFECT THE WORK OR CONTRACTOR'S PERFORMANCE.

2. DRAWINGS DO NOT INCLUDE NECESSARY COMPONENTS FOR CONSTRUCTION SAFETY.

**Date:** 05/05/2025
**Drawn by:** Author **Proj. Mgr.:** Checker

**Revisions**

| No. | Date | Description |
|---|---|---|
| | | |

BASEMENT & SECOND FLOOR PLANS

# A1.01

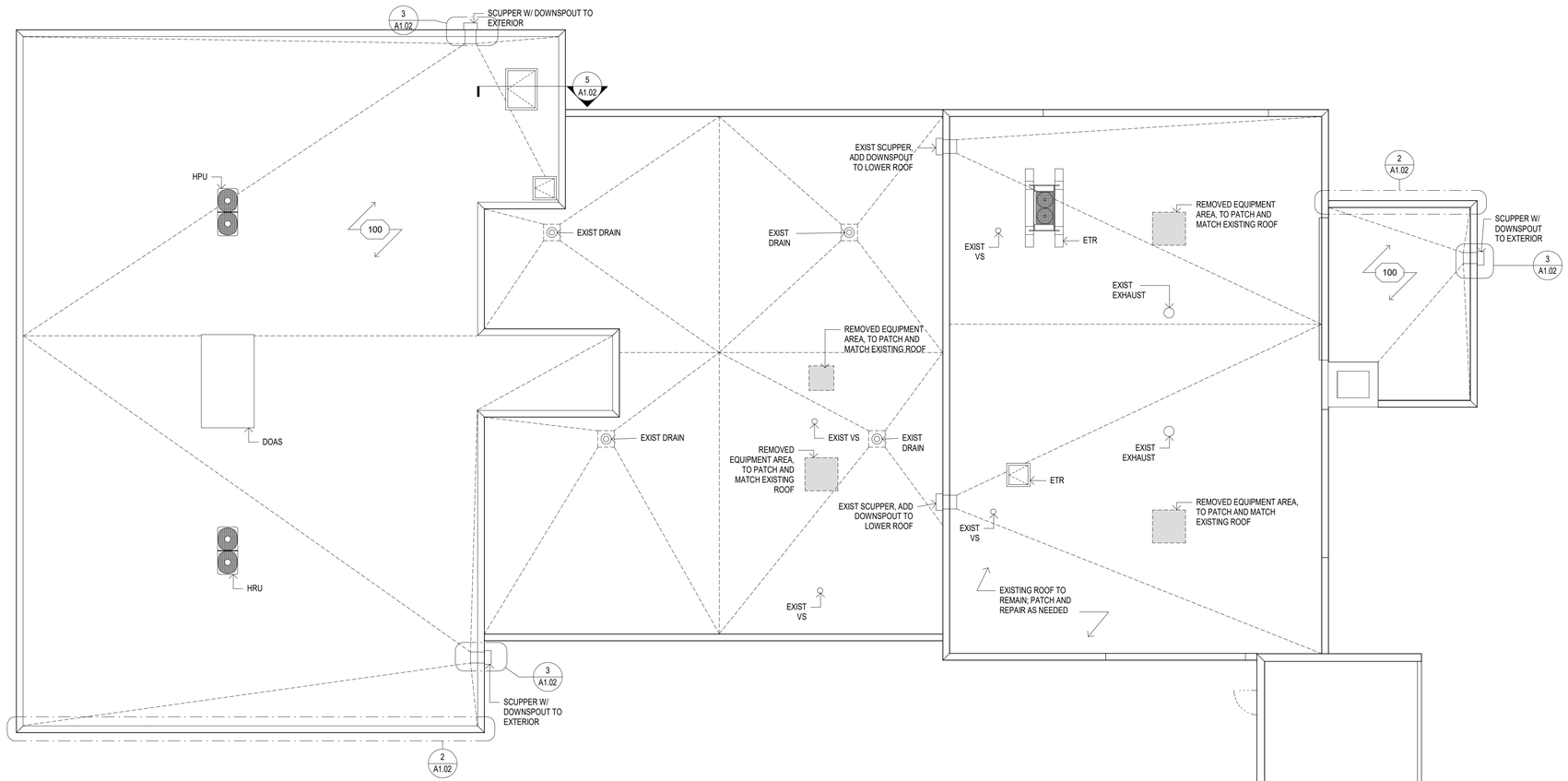


1 A1.02 **Roof Plan** 1/8" = 1'-0"

- FULLY ADHERED TPO ROOF SYSTEM ON:
- 1/2" HIGH DENSITY POLYISO PROTECTION BOARD ON:
- (2) LAYERS OF 2.1" POLYISO INSULATION ON:
- SELF ADHERED SHEET VAPOR RETARDER ON:
- EXISTING 1-1/2" GALV. STL ROOF DECK

TOTAL R-VALUE 28

100 FULLY ADHERED TPO ROOF SYSTEM SECURED TO 1/2" HIGH DENSITY POLYISO PROTECTION BOARD OVER (2) LAYERS OF 2.1" POLYISO INSULATION OVER SELF ADHERED SHEET VAPOR RETARDER MECHANICALLY FASTENED TO 1-1/2" GALV. STL. ROOF DECK

4 A1.02 **ROOF TYPE 100** 1 1/2" = 1'-0"

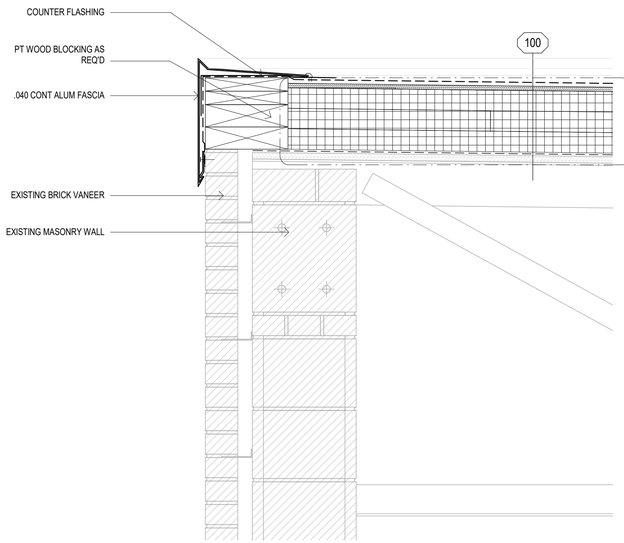


2 A1.02 **ROOF - Edge** 1 1/2" = 1'-0"

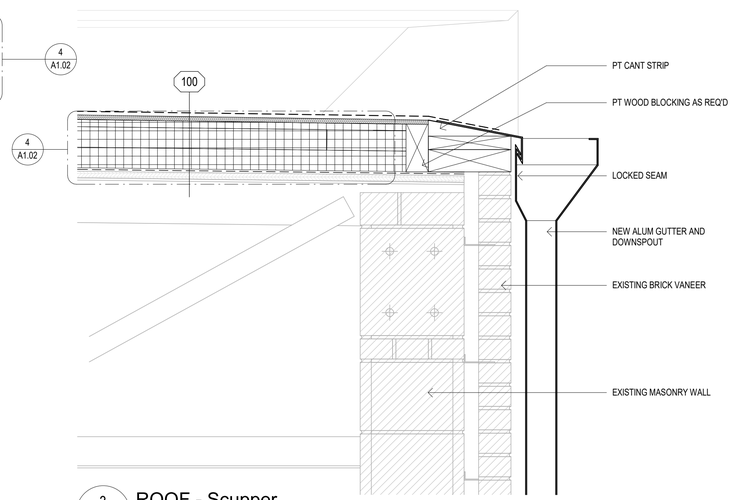


3 A1.02 **ROOF - Scupper** 1 1/2" = 1'-0"

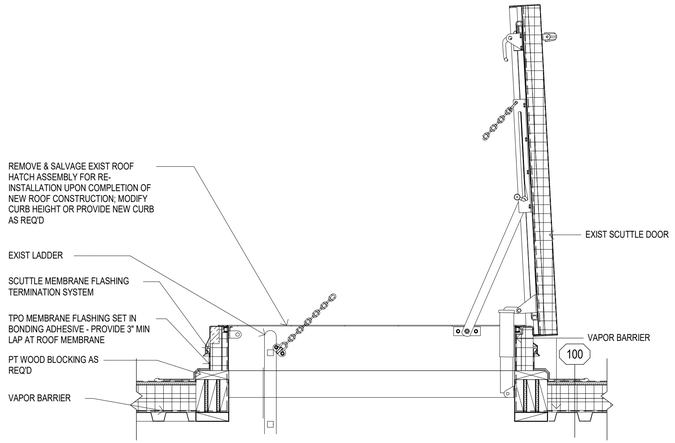


5 A1.02 **ROOF - Roof Hatch Detail** 1" = 1'-0"

# JOSLIN RECREATION CENTER - CPF RENOVATION

17 Hyatt St., Providence, RI 02903

Owner:
City of Providence, Dept. of Public Property
25 Dorrance Street
Providence, Rhode Island 02903


Rowse Architects
400 Massasoit Avenue
Suite 300, Second Floor
East Providence, Rhode Island
p. (401) 331-9200

2 Hampshire Street
Suite 106, First Floor
Foxboro, Massachusetts
p. (774) 215-0290
rowse@rowsearchitects.com



**OWNERSHIP AND USE OF DOCUMENTS, DRAWINGS AND SPECIFICATIONS AS INSTRUMENTS OF PROFESSIONAL SERVICE, ARE, AND SHALL REMAIN, THE PROPERTY OF THE ARCHITECT. THESE DOCUMENTS ARE NOT TO BE USED, IN WHOLE OR IN PART, FOR ANY OTHER PROJECTS OR PURPOSES, OR BY ANY OTHER PARTIES THAN THOSE PROPERLY AUTHORIZED BY CONTRACT WITHOUT THE EXPRESS AUTHORIZATION OF THE ARCHITECT.**


## GENERAL NOTES

1. CONTRACTOR SHALL VISIT SITE, PRIOR TO BID, AND CAREFULLY INVESTIGATE AND EXAMINE THE AREA OF WORK SO AS TO SATISFY HIMSELF AS TO THE NATURE AND LOCATION OF THE WORK. CONTRACTOR TO NOTE THE CHARACTER, QUALITY, QUANTITIES OF MATERIALS REQUIRED AND DIFFICULTIES TO BE ENCOUNTERED, THE KIND AND EXTENT OF EQUIPMENT AND FACILITIES NEEDED FOR PERFORMANCE OF THE WORK AND OTHER ITEMS WHICH MAY, IN ANY WAY, AFFECT THE WORK OR CONTRACTOR'S PERFORMANCE.

2. DRAWINGS DO NOT INCLUDE NECESSARY COMPONENTS FOR CONSTRUCTION SAFETY.

**Date:** 05/05/2025
**Drawn by:** Author **Proj. Mgr.:** Checker

**Revisions**

| No. | Date | Description |
|---|---|---|
| | | |

ROOF PLAN

# A1.02

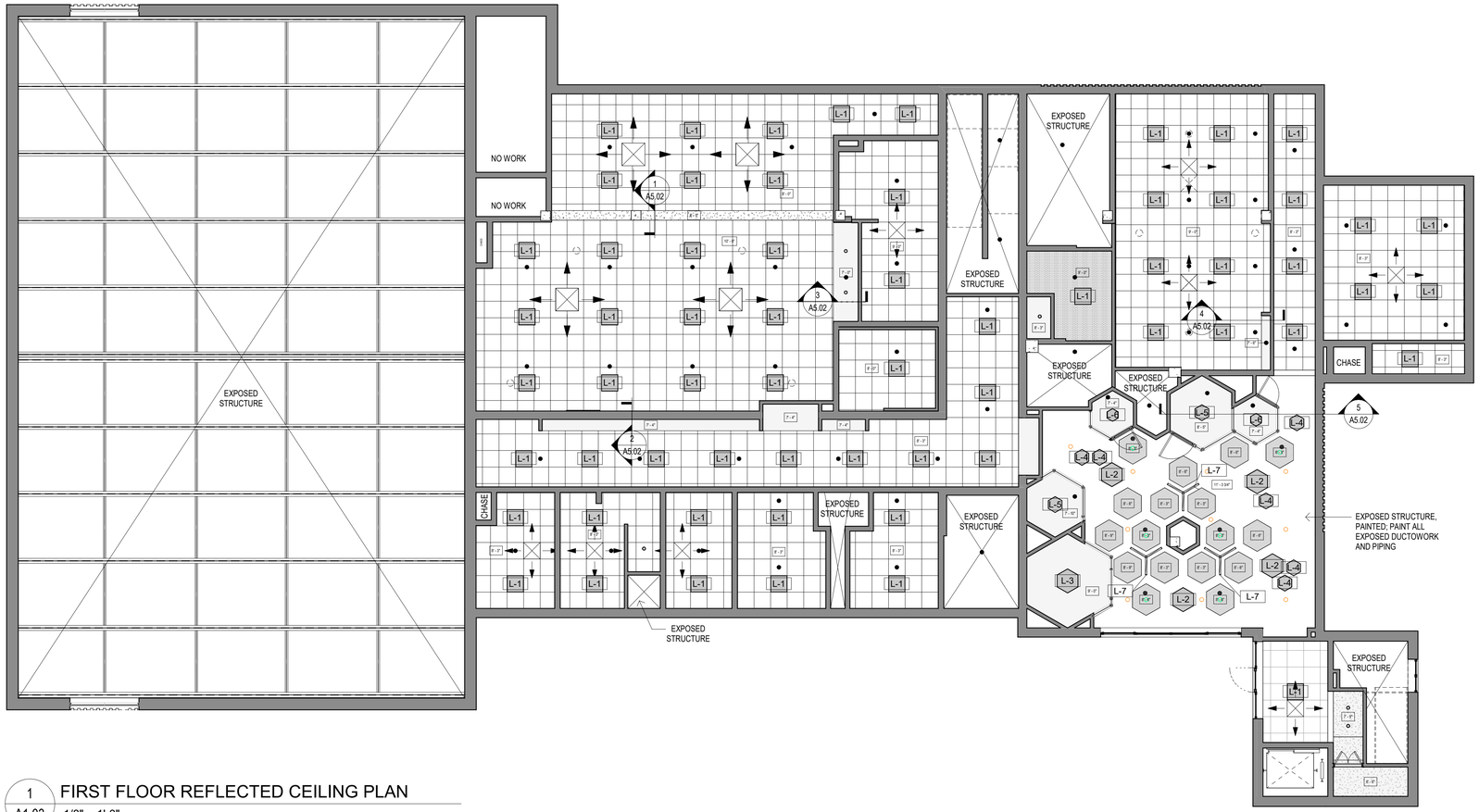


1 A1.03 FIRST FLOOR REFLECTED CEILING PLAN

1/8" = 1'-0"

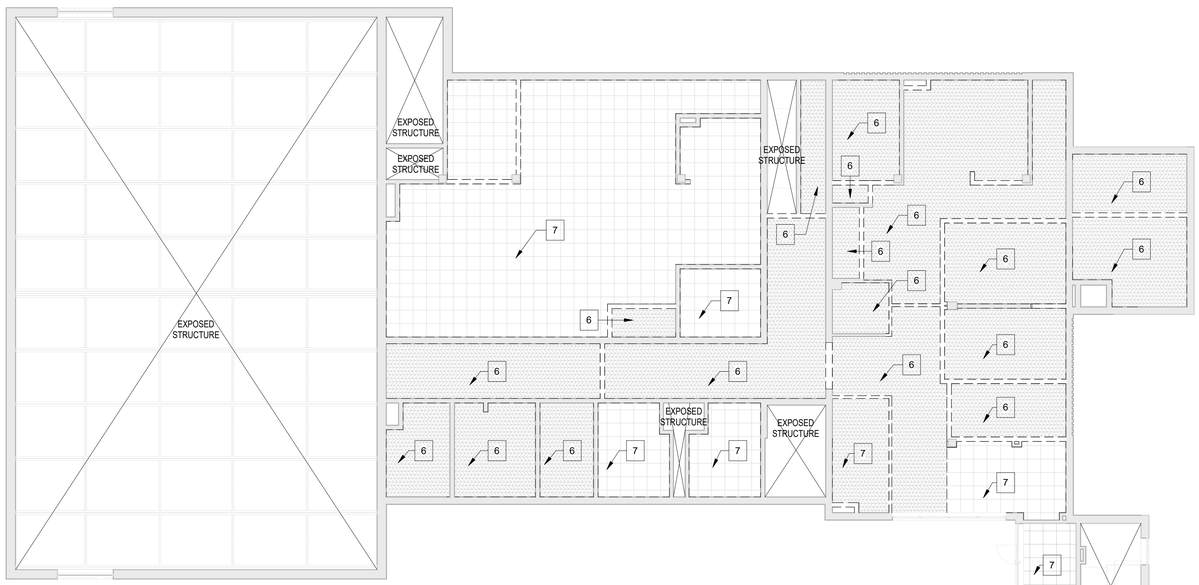


2 A1.03 FIRST FLOOR CEILING DEMOLITION PLAN

3/32" = 1'-0"

REFLECTED CEILING PLAN LEGEND

| | |
|---|---|
| | WALL AS OCCURS |
| X'-X" | CEILING/SOFFIT HEIGHT |
| | 2x2 SUSPENDED ACOUSTICAL CEILING SYSTEM |
| | ETR 2x2 SUSPENDED ACOUSTICAL CEILING SYSTEM |
| | 2x2 SUSPENDED ACOUSTICAL CEILING SYSTEM - TO DEMOLISH |
| | 2x4 SUSPENDED ACOUSTICAL CEILING SYSTEM |
| | GYPSUM BOARD CEILING SYSTEM |
| | MOISTURE RESISTANT GYPSUM BOARD CEILING SYSTEM |
| | FIRE-RESISTANT GYPSUM BOARD CEILING SYSTEM; PROVIDE 2-LAYERS 5/8" TYPE X GYPSUM; ALL PENETRATIONS MUST BE SEALED; 1-HR RATED |
| | TECTUM ACOUSTICAL CLOUD CEILING SYSTEM |
| | PLYWOOD CEILING - TO DEMOLISH |
| | NO CEILING, EXPOSED STRUCTURE ABOVE |
| | RECESSED LIGHT FIXTURE * |
| | PENDANT LIGHT FIXTURE * |

* REFER TO ELECTRICAL DRAWINGS
** REFER TO MECHANICAL DRAWINGS
*** REFER TO PLUMBING/FIRE PROTECTION DRAWINGS

LIGHTING FIXTURE SCHEDULE

| Type Mark | Description | Manufacturer | Type | Count | Comments |
|---|---|---|---|---|---|
| L-1 | Surface Mounted | | 1'x1'(2 Lamp) - 277V | 62 | |
| L-2 | Pendant | ABOVE ALL | Suspended Hexagon Light Fixture | 4 | |
| L-3 | Surface Mounted | ABOVE ALL | Surface Mounted Hexagon L Light Fixture | 1 | |
| L-4 | Pendant | ABOVE ALL | Suspended Hexagon M Light Fixture | 6 | |
| L-5 | Surface Mounted | ABOVE ALL | Surface Mounted Hexagon M Light Fixture | 2 | |
| L-6 | Surface Mounted | ABOVE ALL | Surface Mounted Hexagon S Light Fixture | 2 | |
| L-7 | SQ2 Suspeded Mount | Cooper Lighting | Load Type Catalog | 9 | |

* REFER TO ELECTRICAL DRAWINGS FOR ADDITIONAL INFORMATION

DEMOLITION NOTES

1. REMOVE AND DISPOSE OF WALL ASSEMBLY IN ITS ENTIRETY, INCLUDING BUT NOT LIMITED TO ALL DOORS, FRAMES, AND TRIM, AS REQ'D FOR NEW WORK. REMOVE AND MAKE SAFE ALL ELECTRICAL COMPONENTS REQ'D FOR NEW WORK.
2. REMOVE AND DISPOSE OF PORTION OF EXISTING WALL ASSEMBLY, AS REQ'D FOR NEW WORK.
3. SHOP BLAST TO REMOVE EXISTING EPOXY FLOORING SYSTEM, INCLUDING ALL WALL BASE AS OCCURS, TO PREPARE SURFACE TO RECEIVE NEW FLOORING, PER MANUFACTURER'S RECOMMENDATIONS.
4. REMOVE AND DISPOSE OF EXISTING VCT AND VINYL WALL BASE AS OCCURS. PREPARE SURFACE TO RECEIVE NEW FLOORING, PER MANUFACTURER'S RECOMMENDATIONS.
5. REMOVE AND DISPOSE OF EXISTING CERAMIC TILE FLOORING ASSEMBLY. PREPARE SURFACE TO RECEIVE NEW FLOORING, PER MANUFACTURER'S RECOMMENDATIONS.
6. REMOVE AND DISPOSE OF EXISTING PLYWOOD CEILING ASSEMBLY. TEMPORARILY HANG AND SUPPORT ALL CONDUIT, PIPING, AND LIGHTING AS REQ'D FOR NEW WORK. PROVIDE TEMPORARY LIGHTING WHERE REQUIRED.
7. REMOVE AND DISPOSE OF EXISTING 2X2 ACT CEILING ASSEMBLY; REMOVE AND MAKE SAFE ALL EXISTING LIGHT FIXTURES.
8. REMOVE AND DISPOSE OF PLUMBING FIXTURES, TOILET ACCESSORIES, AND TOILET PARTITIONS IN ITS ENTIRETY. REFER TO PLUMBING DRAWINGS FOR ADDITIONAL INFORMATION.
9. REMOVE AND DISPOSE OF WINDOW IN FILLED MATERIAL, CONSISTING OF PLYWOOD AND MASONRY. PREPARE EXISTING OPENING TO RECEIVE NEW WINDOW.
10. REMOVE AND DISPOSE OF EXISTING INTERIOR RECEPTION WINDOW. PREPARE OPENING TO RECEIVE NEW COUNTER.
11. REMOVE AND DISPOSE OF EXISTING COUNTER AND WINDOW ASSEMBLY IN MULTIPURPOSE ROOM.
12. REMOVE AND DISPOSE OF EXISTING DOOR AND FRAME; PREPARE OPENING FOR NEW WORK AS REQ'D.
13. REMOVE EXISTING SCUPPER AND DOWNSPOUT.
14. REMOVE EXISTING EXHAUST FAN AND ROOF CURB.
15. REMOVE EXISTING VENTILATOR AND ROOF CURB.
16. REMOVE EXISTING DRAIN.
17. REMOVE EXISTING VENT STACK.
18. REMOVE AND SALVAGE EXIST ROOF HATCH ASSEMBLY FOR RE-INSTALLATION.
19. REMOVE EXISTING ROOF ASSEMBLY AND INSULATION IN ITS ENTIRETY TO EXISTING ROOF DECK AS OCCURS.

# JOSLIN RECREATION CENTER - CPF RENOVATION

17 Hyatt St., Providence, RI 02903

Owner:
City of Providence, Dept. of Public Property
25 Dorrance Street
Providence, Rhode Island 02903

ROWSE Architects
400 Massasoit Avenue
Suite 300, Second Floor
East Providence, Rhode Island
p. (401) 331-9200

2 Hampshire Street
Suite 106, First Floor
Foxboro, Massachusetts
p. (774) 215-0290
rowse@rowsearchitects.com

OWNERSHIP AND USE OF DOCUMENTS, DRAWINGS AND SPECIFICATIONS AS INSTRUMENTS OF PROFESSIONAL SERVICE, ARE, AND SHALL REMAIN, THE PROPERTY OF THE ARCHITECT. THESE DOCUMENTS ARE NOT TO BE USED, IN WHOLE OR IN PART, FOR ANY OTHER PROJECTS OR PURPOSES, OR BY ANY OTHER PARTIES THAN THOSE PROPERLY AUTHORIZED BY CONTRACT WITHOUT THE EXPRESS AUTHORIZATION OF THE ARCHITECT.

## GENERAL NOTES

1. CONTRACTOR SHALL VISIT SITE, PRIOR TO BID, AND CAREFULLY INVESTIGATE AND EXAMINE THE AREA OF WORK SO AS TO SATISFY HIMSELF AS TO THE NATURE AND LOCATION OF THE WORK. CONTRACTOR TO NOTE THE CHARACTER, QUALITY, QUANTITIES OF MATERIALS REQUIRED AND DIFFICULTIES TO BE ENCOUNTERED, THE KIND AND EXTENT OF EQUIPMENT AND FACILITIES NEEDED FOR PERFORMANCE OF THE WORK AND OTHER ITEMS WHICH MAY, IN ANY WAY, AFFECT THE WORK OR CONTRACTOR'S PERFORMANCE.
2. DRAWINGS DO NOT INCLUDE NECESSARY COMPONENTS FOR CONSTRUCTION SAFETY.

**Date:** 05/05/2025
**Drawn by:** Author **Proj. Mgr.:** Checker

**Revisions**

| No. | Date | Description |
|---|---|---|
| | | |

FIRST FLOOR REFLECTED CEILING PLAN

# A1.03

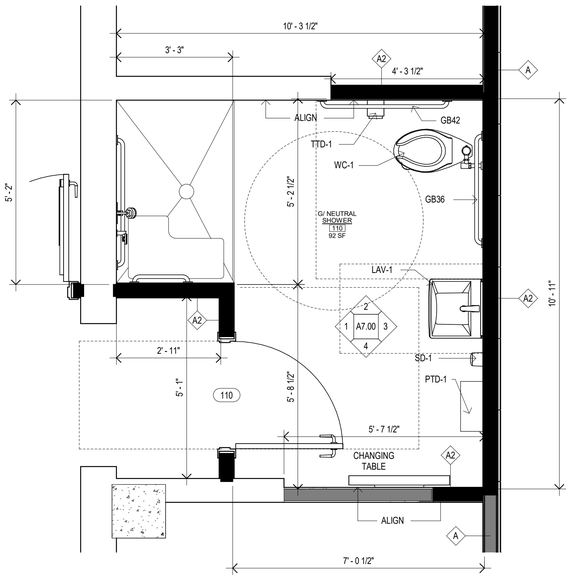


1 A2.00 Shower Room

1/2" = 1'-0"

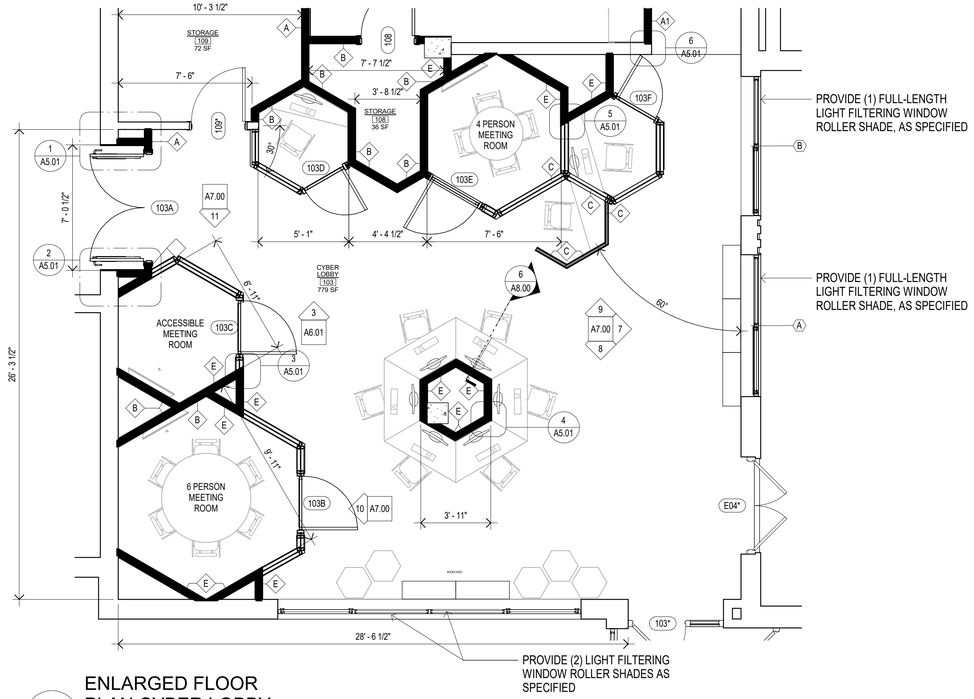


2 A2.00 ENLARGED FLOOR PLAN CYBER LOBBY

1/4" = 1'-0"

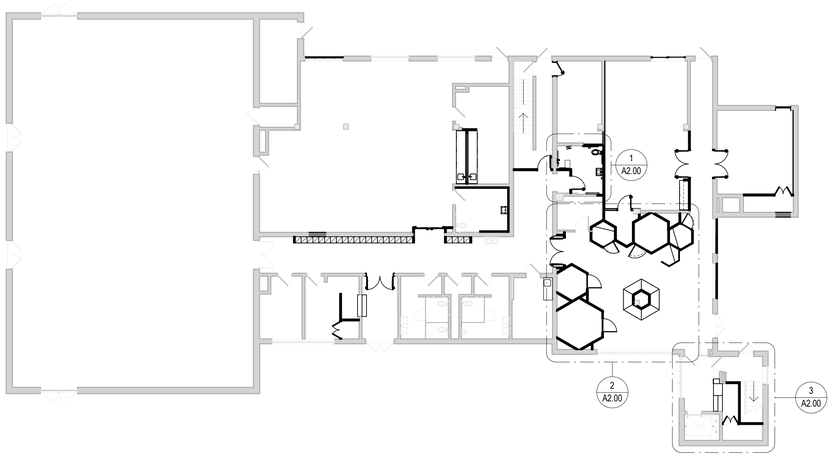


KeyPlan Enlarged Plans

1/16" = 1'-0"

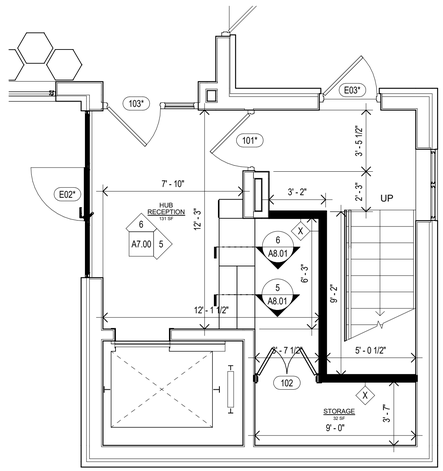


3 A2.00 ENLARGED FLOOR PLAN HUB RECEPTION

1/4" = 1'-0"

NOTE:
ALL ROOMS AND SPACES TO RECEIVE INTERIOR SIGNAGE AS SPECIFIED IN SECTION 101400. REFER TO SHEET G0.01 FOR ADDITIONAL INFORMATION

# JOSLIN RECREATION CENTER - CPF RENOVATION

17 Hyatt St., Providence, RI 02903

Owner:
City of Providence, Dept. of Public Property
25 Dorrance Street
Providence, Rhode Island 02903

ROWSE Architects
400 Massasoit Avenue
Suite 300, Second Floor
East Providence, Rhode Island
p. (401) 331-9200

2 Hampshire Street
Suite 106, First Floor
Foxboro, Massachusetts
p. (774) 215-0290
rowse@rowsearchitects.com

**OWNERSHIP AND USE OF DOCUMENTS, DRAWINGS AND SPECIFICATIONS AS INSTRUMENTS OF PROFESSIONAL SERVICE, ARE, AND SHALL REMAIN, THE PROPERTY OF THE ARCHITECT. THESE DOCUMENTS ARE NOT TO BE USED, IN WHOLE OR IN PART, FOR ANY OTHER PROJECTS OR PURPOSES, OR BY ANY OTHER PARTIES THAN THOSE PROPERLY AUTHORIZED BY CONTRACT WITHOUT THE EXPRESS AUTHORIZATION OF THE ARCHITECT.**

## GENERAL NOTES

1. CONTRACTOR SHALL VISIT SITE, PRIOR TO BID, AND CAREFULLY INVESTIGATE AND EXAMINE THE AREA OF WORK SO AS TO SATISFY HIMSELF AS TO THE NATURE AND LOCATION OF THE WORK. CONTRACTOR TO NOTE THE CHARACTER, QUALITY, QUANTITIES OF MATERIALS REQUIRED AND DIFFICULTIES TO BE ENCOUNTERED, THE KIND AND EXTENT OF EQUIPMENT AND FACILITIES NEEDED FOR PERFORMANCE OF THE WORK AND OTHER ITEMS WHICH MAY, IN ANY WAY, AFFECT THE WORK OR CONTRACTOR'S PERFORMANCE.

2. DRAWINGS DO NOT INCLUDE NECESSARY COMPONENTS FOR CONSTRUCTION SAFETY.

**Date:** 05/05/2025
**Drawn by:** Author **Proj. Mgr.:** Checker
**Revisions**

| No. | Date | Description |
|---|---|---|
| | | |

ENLARGED FLOOR PLANS

# A2.00

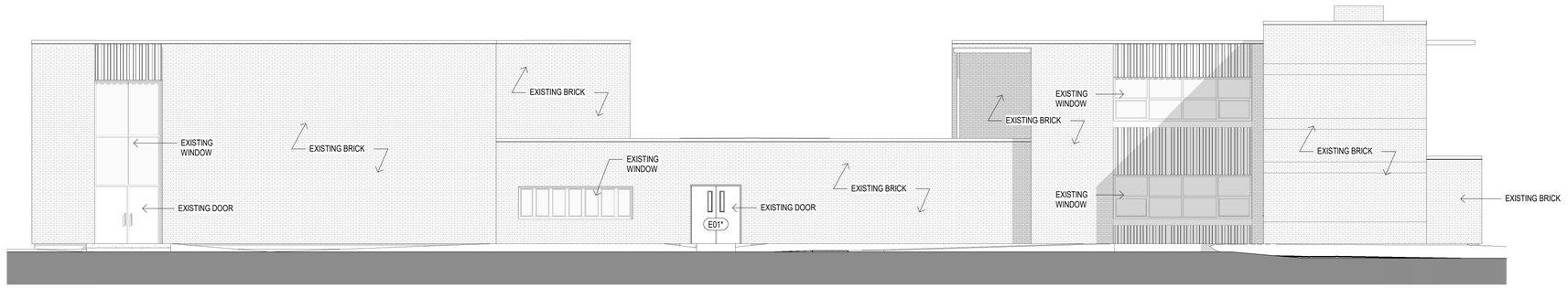


1 A3.00 NW Elevation

1/8" = 1'-0"

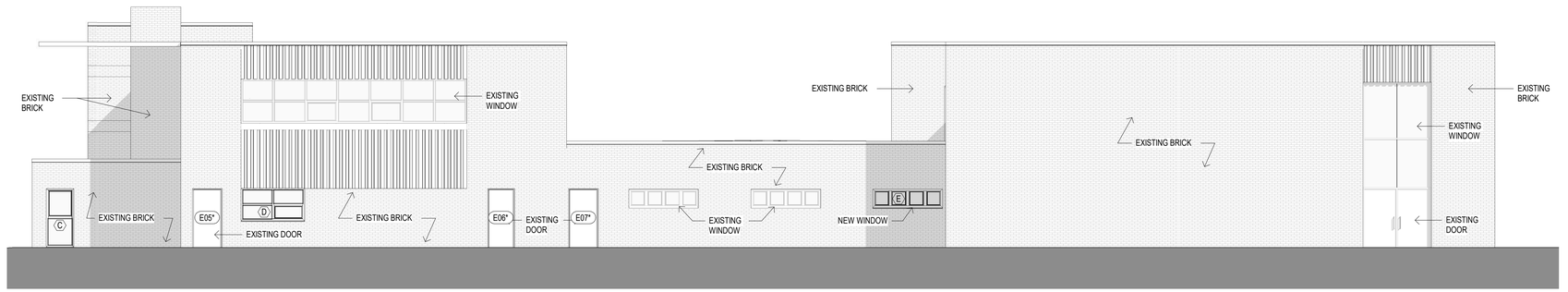


2 A3.00 SE Elevation

1/8" = 1'-0"

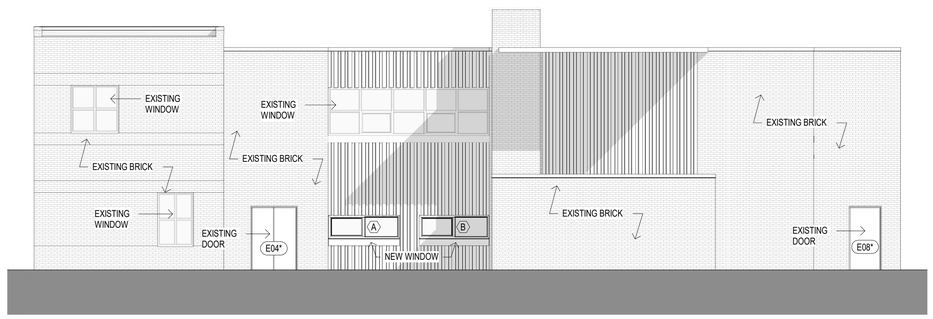


3 A3.00 SW Elevation

1/8" = 1'-0"

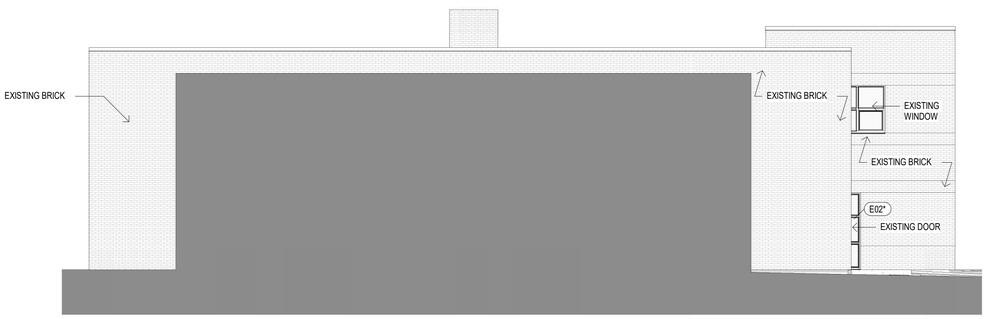


4 A3.00 NE Elevation

1/8" = 1'-0"

# JOSLIN RECREATION CENTER - CPF RENOVATION

17 Hyatt St., Providence, RI 02903

Owner:
City of Providence, Dept. of Public Property
25 Dorrance Street
Providence, Rhode Island 02903


ROWSE Architects

400 Massasoit Avenue
Suite 300, Second Floor
East Providence, Rhode Island
p. (401) 331-9200

2 Hampshire Street
Suite 106, First Floor
Foxboro, Massachusetts
p. (774) 215-0290

rowse@rowsearchitects.com



**OWNERSHIP AND USE OF DOCUMENTS, DRAWINGS AND SPECIFICATIONS AS INSTRUMENTS OF PROFESSIONAL SERVICE, ARE, AND SHALL REMAIN, THE PROPERTY OF THE ARCHITECT. THESE DOCUMENTS ARE NOT TO BE USED, IN WHOLE OR IN PART, FOR ANY OTHER PROJECTS OR PURPOSES, OR BY ANY OTHER PARTIES THAN THOSE PROPERLY AUTHORIZED BY CONTRACT WITHOUT THE EXPRESS AUTHORIZATION OF THE ARCHITECT.**


## GENERAL NOTES

1. CONTRACTOR SHALL VISIT SITE, PRIOR TO BID, AND CAREFULLY INVESTIGATE AND EXAMINE THE AREA OF WORK SO AS TO SATISFY HIMSELF AS TO THE NATURE AND LOCATION OF THE WORK. CONTRACTOR TO NOTE THE CHARACTER, QUALITY, QUANTITIES OF MATERIALS REQUIRED AND DIFFICULTIES TO BE ENCOUNTERED, THE KIND AND EXTENT OF EQUIPMENT AND FACILITIES NEEDED FOR PERFORMANCE OF THE WORK AND OTHER ITEMS WHICH MAY, IN ANY WAY, AFFECT THE WORK OR CONTRACTOR'S PERFORMANCE.

2. DRAWINGS DO NOT INCLUDE NECESSARY COMPONENTS FOR CONSTRUCTION SAFETY.

**Date:** 05/05/2025

**Drawn by:** JA **Proj. Mgr.:** BEG

**Revisions**

| No. | Date | Description |
|---|---|---|
| | | |

BUILDING ELEVATIONS

# A3.00

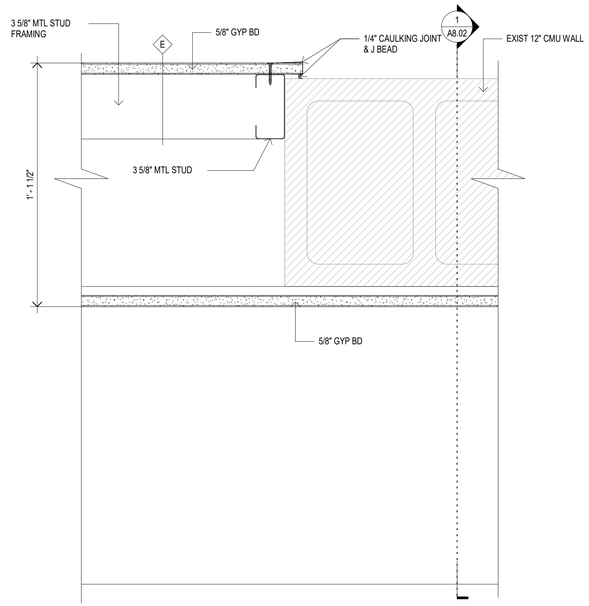


1 A5.00 Plan Detail
3" = 1'-0"

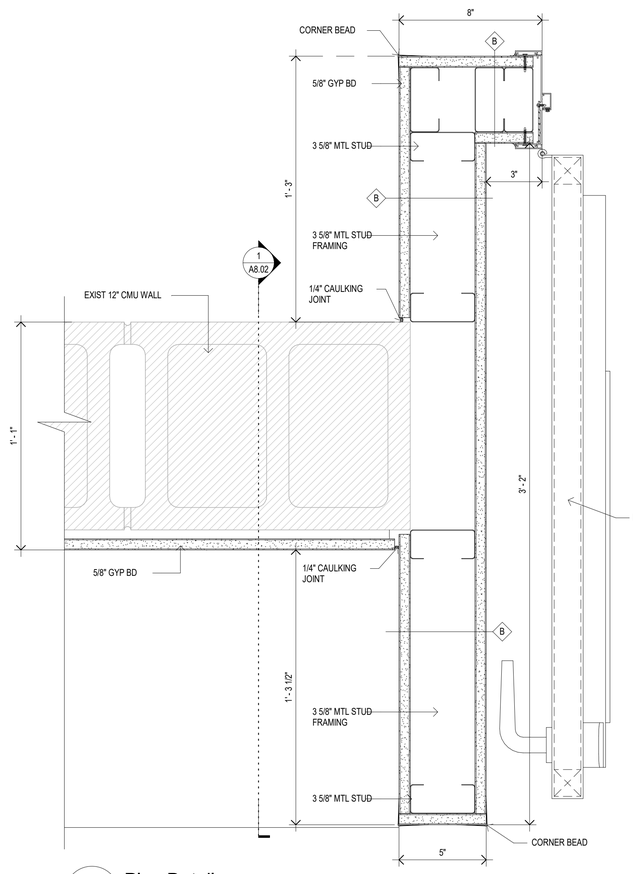


2 A5.00 Plan Detail
3" = 1'-0"

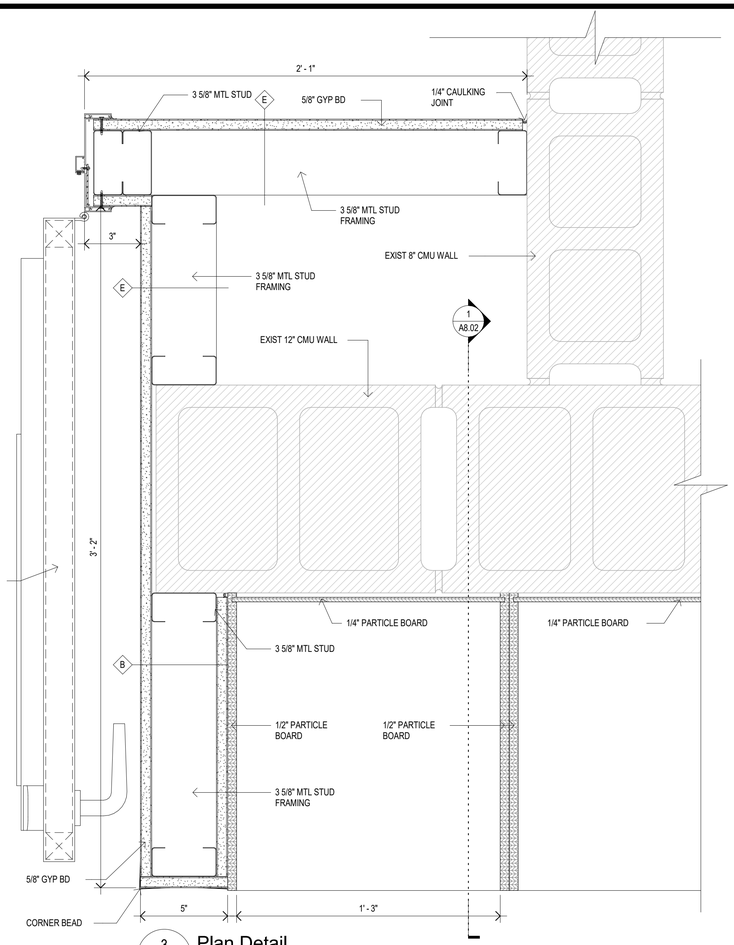


3 A5.00 Plan Detail
3" = 1'-0"

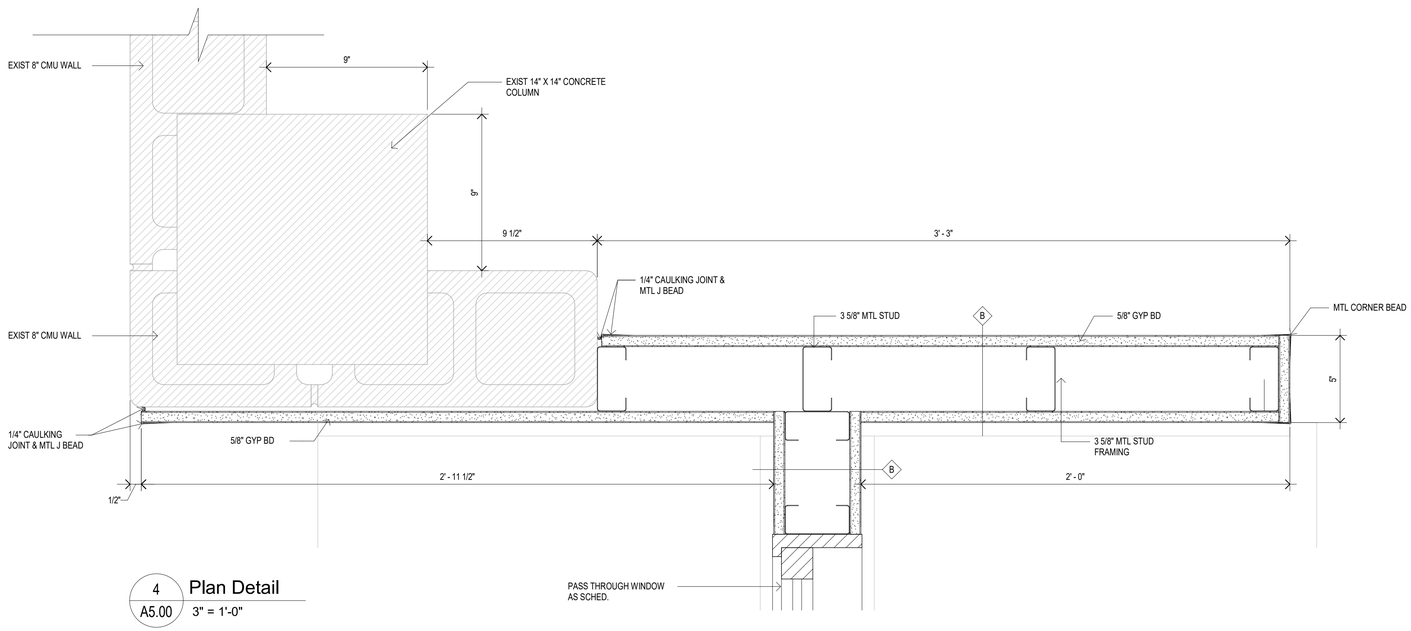


4 A5.00 Plan Detail
3" = 1'-0"

# JOSLIN RECREATION CENTER - CPF RENOVATION

17 Hyatt St., Providence, RI 02903

Owner:
City of Providence, Dept. of Public Property
25 Dorrance Street
Providence, Rhode Island 02903


Rowse Architects
400 Massasoit Avenue
Suite 300, Second Floor
East Providence, Rhode Island
p. (401) 331-9200

2 Hampshire Street
Suite 106, First Floor
Foxboro, Massachusetts
p. (774) 215-0290
rowse@rowsearchitects.com



**OWNERSHIP AND USE OF DOCUMENTS, DRAWINGS AND SPECIFICATIONS AS INSTRUMENTS OF PROFESSIONAL SERVICE, ARE, AND SHALL REMAIN, THE PROPERTY OF THE ARCHITECT. THESE DOCUMENTS ARE NOT TO BE USED, IN WHOLE OR IN PART, FOR ANY OTHER PROJECTS OR PURPOSES, OR BY ANY OTHER PARTIES THAN THOSE PROPERLY AUTHORIZED BY CONTRACT WITHOUT THE EXPRESS AUTHORIZATION OF THE ARCHITECT.**


## GENERAL NOTES

1. CONTRACTOR SHALL VISIT SITE, PRIOR TO BID, AND CAREFULLY INVESTIGATE AND EXAMINE THE AREA OF WORK SO AS TO SATISFY HIMSELF AS TO THE NATURE AND LOCATION OF THE WORK. CONTRACTOR TO NOTE THE CHARACTER, QUALITY, QUANTITIES OF MATERIALS REQUIRED AND DIFFICULTIES TO BE ENCOUNTERED, THE KIND AND EXTENT OF EQUIPMENT AND FACILITIES NEEDED FOR PERFORMANCE OF THE WORK AND OTHER ITEMS WHICH MAY, IN ANY WAY, AFFECT THE WORK OR CONTRACTOR'S PERFORMANCE.

2. DRAWINGS DO NOT INCLUDE NECESSARY COMPONENTS FOR CONSTRUCTION SAFETY.

**Date:** 05/05/2025
**Drawn by:** Author **Proj. Mgr.:** Checker

**Revisions**

| No. | Date | Description |
|---|---|---|
| | | |

PLAN DETAILS

# A5.00

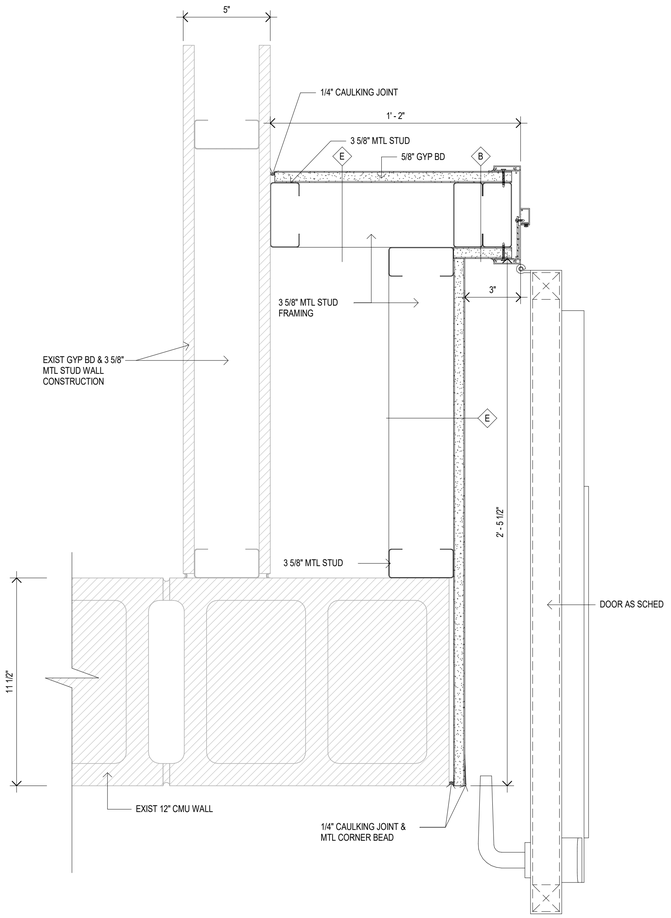


1 A5.01 Plan Detail
3" = 1'-0"

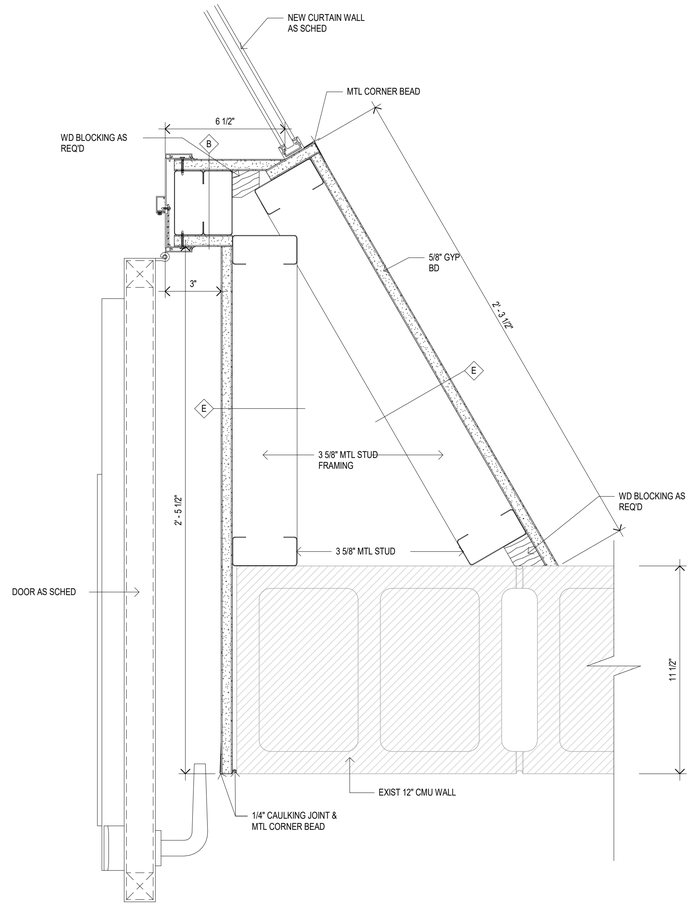


2 A5.01 Plan Detail
3" = 1'-0"

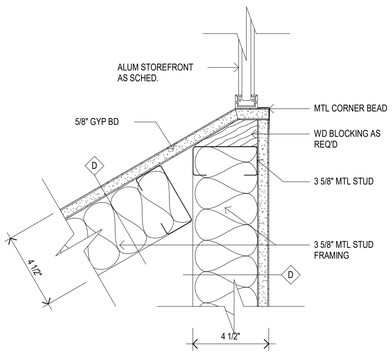


3 A5.01 Plan - Pod Walls 1
3" = 1'-0"

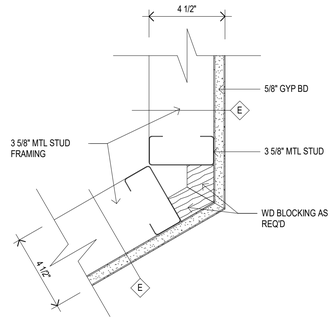


4 A5.01 Plan - Pod Walls 2
3" = 1'-0"

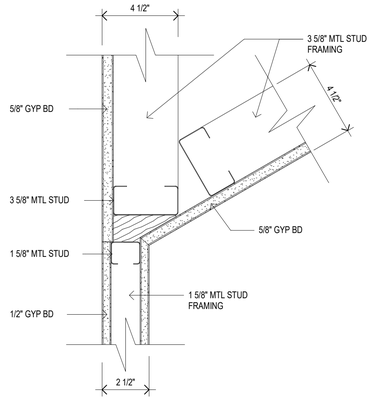


5 A5.01 Plan - Pod Walls 3
3" = 1'-0"

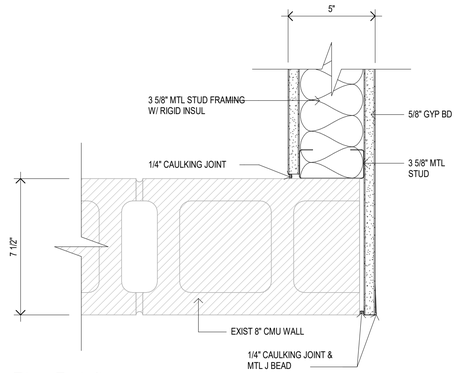


6 A5.01 Plan Detail
3" = 1'-0"

# JOSLIN RECREATION CENTER - CPF RENOVATION

17 Hyatt St., Providence, RI 02903

Owner:
City of Providence, Dept. of Public Property
25 Dorrance Street
Providence, Rhode Island 02903


Rowse Architects
400 Massasoit Avenue
Suite 300, Second Floor
East Providence, Rhode Island
p. (401) 331-9200

2 Hampshire Street
Suite 106, First Floor
Foxboro, Massachusetts
p. (774) 215-0290
rowse@rowsearchitects.com



**OWNERSHIP AND USE OF DOCUMENTS, DRAWINGS AND SPECIFICATIONS AS INSTRUMENTS OF PROFESSIONAL SERVICE, ARE, AND SHALL REMAIN, THE PROPERTY OF THE ARCHITECT. THESE DOCUMENTS ARE NOT TO BE USED, IN WHOLE OR IN PART, FOR ANY OTHER PROJECTS OR PURPOSES, OR BY ANY OTHER PARTIES THAN THOSE PROPERLY AUTHORIZED BY CONTRACT WITHOUT THE EXPRESS AUTHORIZATION OF THE ARCHITECT.**


## GENERAL NOTES

1. CONTRACTOR SHALL VISIT SITE, PRIOR TO BID, AND CAREFULLY INVESTIGATE AND EXAMINE THE AREA OF WORK SO AS TO SATISFY HIMSELF AS TO THE NATURE AND LOCATION OF THE WORK. CONTRACTOR TO NOTE THE CHARACTER, QUALITY, QUANTITIES OF MATERIALS REQUIRED AND DIFFICULTIES TO BE ENCOUNTERED, THE KIND AND EXTENT OF EQUIPMENT AND FACILITIES NEEDED FOR PERFORMANCE OF THE WORK AND OTHER ITEMS WHICH MAY, IN ANY WAY, AFFECT THE WORK OR CONTRACTOR'S PERFORMANCE.

2. DRAWINGS DO NOT INCLUDE NECESSARY COMPONENTS FOR CONSTRUCTION SAFETY.

**Date:** 05/05/2025
**Drawn by:** Author **Proj. Mgr.:** Checker
**Revisions**

| No. | Date | Description |
|---|---|---|
| | | |

PLAN DETAILS

# A5.01

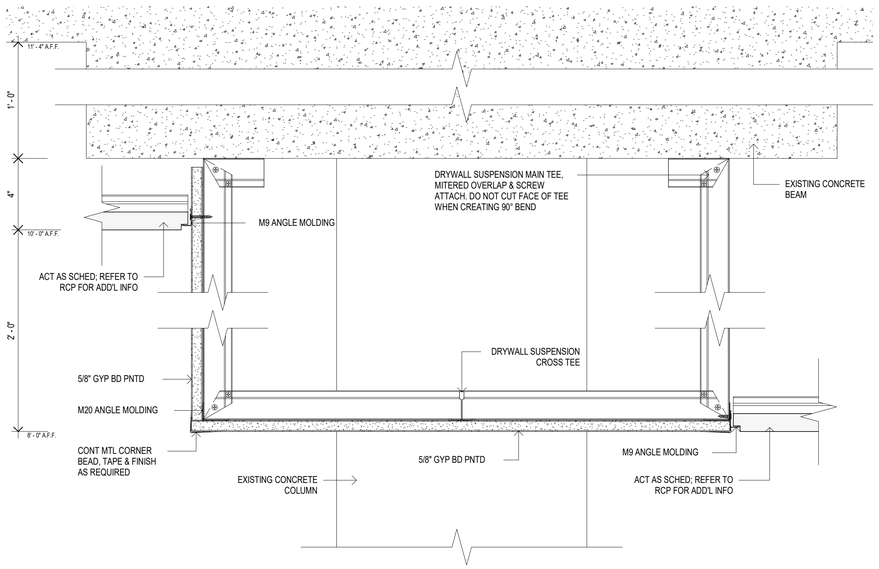


1 A5.02 **Soffit Detail**
3" = 1'-0"

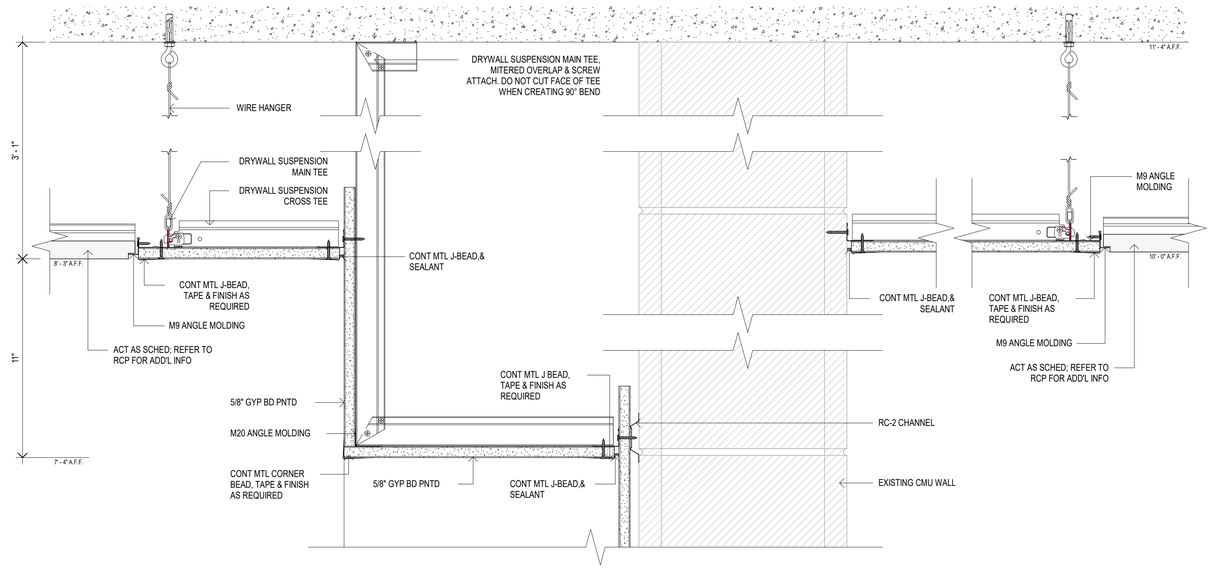


2 A5.02 **Soffit Detail**
3" = 1'-0"

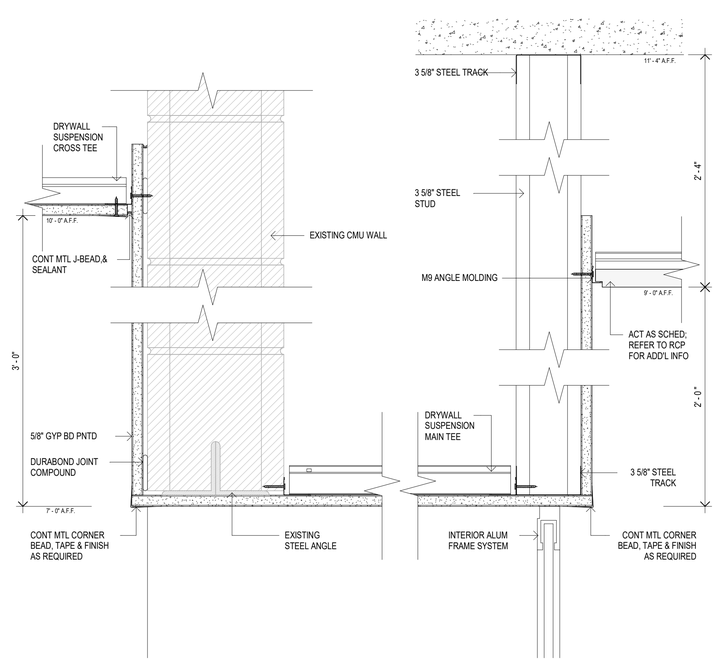


3 A5.02 **Soffit Detail**
3" = 1'-0"

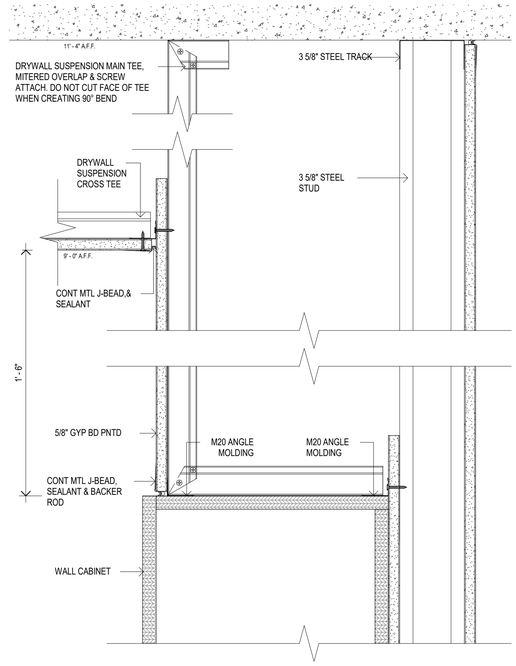


4 A5.02 **Soffit Detail**
3" = 1'-0"

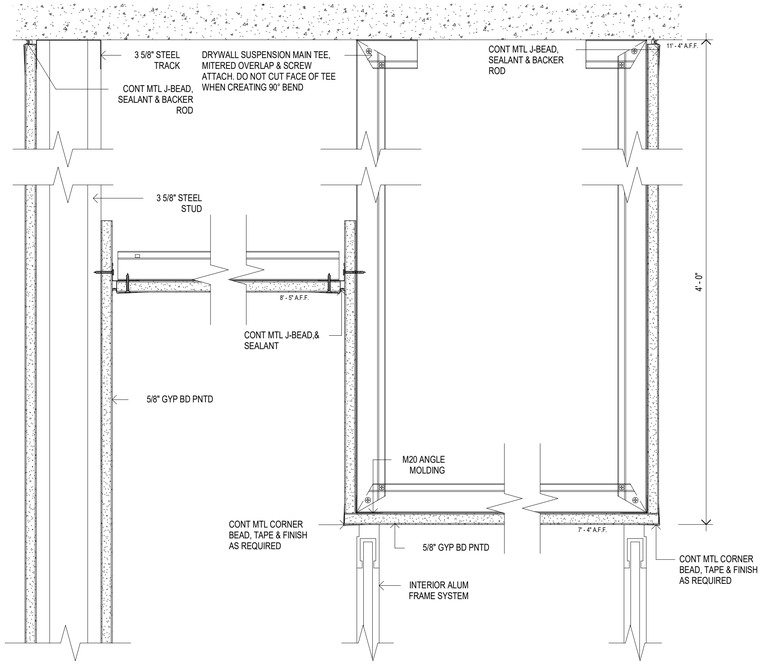


5 A5.02 **Soffit Detail**
3" = 1'-0"

# JOSLIN RECREATION CENTER - CPF RENOVATION

17 Hyatt St., Providence, RI 02903

Owner:
City of Providence, Dept. of Public Property
25 Dorrance Street
Providence, Rhode Island 02903


ROWSE Architects
400 Massasoit Avenue
Suite 300, Second Floor
East Providence, Rhode Island
p. (401) 331-9200

2 Hampshire Street
Suite 106, First Floor
Foxboro, Massachusetts
p. (774) 215-0290
rowse@rowsearchitects.com



**OWNERSHIP AND USE OF DOCUMENTS, DRAWINGS AND SPECIFICATIONS AS INSTRUMENTS OF PROFESSIONAL SERVICE, ARE, AND SHALL REMAIN, THE PROPERTY OF THE ARCHITECT. THESE DOCUMENTS ARE NOT TO BE USED, IN WHOLE OR IN PART, FOR ANY OTHER PROJECTS OR PURPOSES, OR BY ANY OTHER PARTIES THAN THOSE PROPERLY AUTHORIZED BY CONTRACT WITHOUT THE EXPRESS AUTHORIZATION OF THE ARCHITECT.**


## GENERAL NOTES

1. CONTRACTOR SHALL VISIT SITE, PRIOR TO BID, AND CAREFULLY INVESTIGATE AND EXAMINE THE AREA OF WORK SO AS TO SATISFY HIMSELF AS TO THE NATURE AND LOCATION OF THE WORK. CONTRACTOR TO NOTE THE CHARACTER, QUALITY, QUANTITIES OF MATERIALS REQUIRED AND DIFFICULTIES TO BE ENCOUNTERED, THE KIND AND EXTENT OF EQUIPMENT AND FACILITIES NEEDED FOR PERFORMANCE OF THE WORK AND OTHER ITEMS WHICH MAY, IN ANY WAY, AFFECT THE WORK OR CONTRACTOR'S PERFORMANCE.

2. DRAWINGS DO NOT INCLUDE NECESSARY COMPONENTS FOR CONSTRUCTION SAFETY.

**Date:** 05/05/2025
**Drawn by:** Author **Proj. Mgr.:** Checker

**Revisions**

| No. | Date | Description |
|---|---|---|
| | | |

CELING DETAILS

# A5.02

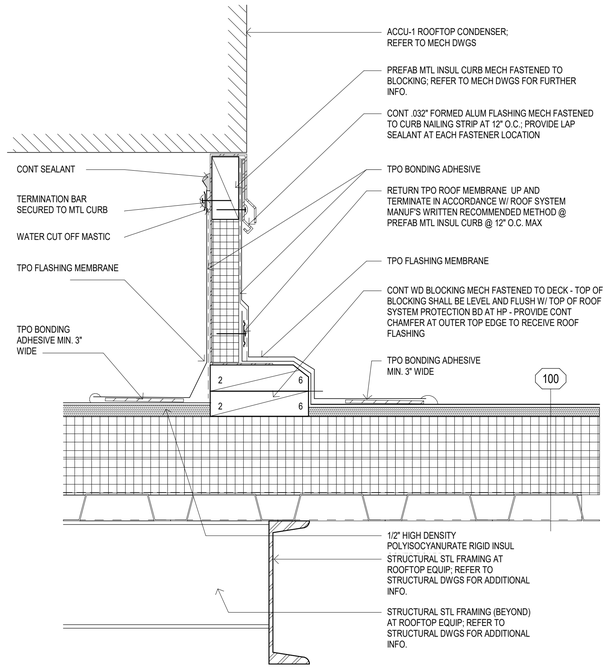


1 A5.03 ROOF - Typical Curb Detail

3" = 1'-0"

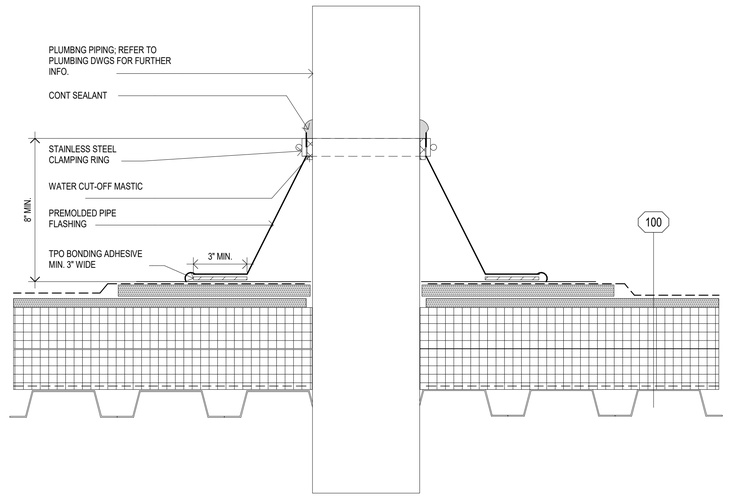


2 A5.03 ROOF - Vent Stack Detail

3" = 1'-0"

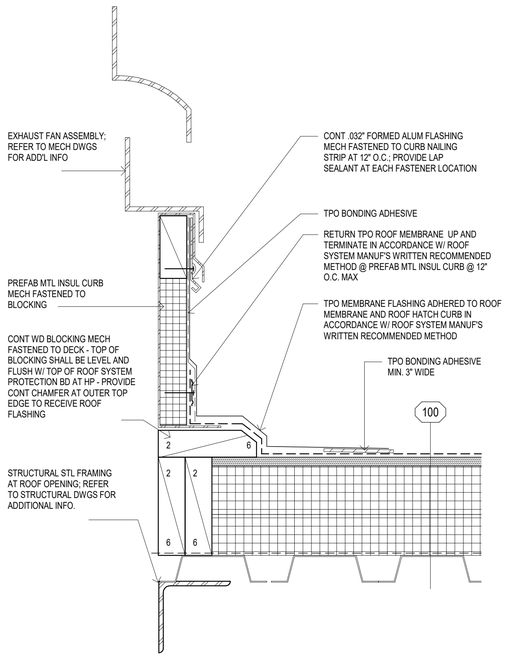


3 A5.03 ROOF - Exhaust Fan Detail

3" = 1'-0"

# JOSLIN RECREATION CENTER - CPF RENOVATION

17 Hyatt St., Providence, RI 02903

Owner:
City of Providence, Dept. of Public Property
25 Dorrance Street
Providence, Rhode Island 02903


ROWSE Architects

400 Massasoit Avenue
Suite 300, Second Floor
East Providence, Rhode Island
p. (401) 331-9200

2 Hampshire Street
Suite 106, First Floor
Foxboro, Massachusetts
p. (774) 215-0290

rowse@rowsearchitects.com



**OWNERSHIP AND USE OF DOCUMENTS, DRAWINGS AND SPECIFICATIONS AS INSTRUMENTS OF PROFESSIONAL SERVICE, ARE, AND SHALL REMAIN, THE PROPERTY OF THE ARCHITECT. THESE DOCUMENTS ARE NOT TO BE USED, IN WHOLE OR IN PART, FOR ANY OTHER PROJECTS OR PURPOSES, OR BY ANY OTHER PARTIES THAN THOSE PROPERLY AUTHORIZED BY CONTRACT WITHOUT THE EXPRESS AUTHORIZATION OF THE ARCHITECT.**


## GENERAL NOTES

1. CONTRACTOR SHALL VISIT SITE, PRIOR TO BID, AND CAREFULLY INVESTIGATE AND EXAMINE THE AREA OF WORK SO AS TO SATISFY HIMSELF AS TO THE NATURE AND LOCATION OF THE WORK. CONTRACTOR TO NOTE THE CHARACTER, QUALITY, QUANTITIES OF MATERIALS REQUIRED AND DIFFICULTIES TO BE ENCOUNTERED, THE KIND AND EXTENT OF EQUIPMENT AND FACILITIES NEEDED FOR PERFORMANCE OF THE WORK AND OTHER ITEMS WHICH MAY, IN ANY WAY, AFFECT THE WORK OR CONTRACTOR'S PERFORMANCE.

2. DRAWINGS DO NOT INCLUDE NECESSARY COMPONENTS FOR CONSTRUCTION SAFETY.

**Date:** 05/05/2025

**Drawn by:** Author **Proj. Mgr.:** Checker

**Revisions**

| No. | Date | Description |
|---|---|---|
| | | |
| | | |
| | | |
| | | |
| | | |
| | | |
| | | |

ROOF DETAILS

# A5.03

## DOOR SCHEDULE

* DENOTES EXISTING DOOR & FRAME

| # | DOOR WIDTH | DOOR HEIGHT | DOOR THICK | DOOR TYPE | DOOR MAT | DOOR FIN | FRAME TYPE | FRAME MAT | FRAME FIN | HEAD | JAMB | SILL | WIDTH | HW SET | LABEL | REMARKS |
|---|---|---|---|---|---|---|---|---|---|---|---|---|---|---|---|---|
| 1st Floor | | | | | | | | | | | | | | | | |
| 101* | 3' - 0" | 7' - 0" | 1 3/4" | - | - | - | - | - | - | - | - | - | | ETR | - | Existing to Remain |
| 102 | 3' - 4" | 7' - 0" | 1 3/4" | D1 | WD | PNT | | | | 1/A6.00 | 2/A6.00 | - | | 1 | | |
| 103* | 3' - 0" | 7' - 0" | 1 3/4" | - | - | - | - | - | - | - | - | - | | 13 | - | Existing to Remain |
| 103A | PAIR 6' - 0" | 7' - 0" | 1 3/4" | D2 | WD | PNT | F1 | HM | PNT | 1/A6.00 | 2/A6.00 | - | | 2 | - | |
| 103B | 3' - 0" | 7' - 0" | 1 3/4" | D4 | - | PNT | | | | 10/A.601 | 12/A6.01 | - | | 3 | - | KAWNEER190 DOOR |
| 103C | 3' - 0" | 7' - 0" | 1 3/4" | D4 | - | PNT | | | | 10/A.601 | 12/A6.01 | - | | 3 | - | KAWNEER190 DOOR |
| 103D | 2' - 6" | 7' - 0" | 1 3/4" | D4 | - | PNT | | | | 10/A.601 | 12/A6.01 | - | | 3 | - | KAWNEER190 DOOR |
| 103E | 3' - 0" | 7' - 0" | 1 3/4" | D4 | - | PNT | | | | 10/A.601 | 12/A6.01 | - | | 3 | - | KAWNEER190 DOOR |
| 103F | 2' - 6" | 7' - 0" | 1 3/4" | D4 | - | PNT | | | | 10/A.601 | 12/A6.01 | - | | 3 | - | KAWNEER190 DOOR |
| 105 | PAIR 6' - 0" | 7' - 0" | 1 3/4" | D2 | WD | PNT | F1 | HM | PNT | 3/A6.00 | 4/A6.00 | - | | 4 | - | |
| 106 | 3' - 8" | 7' - 0" | 1 3/4" | D1 | WD | PNT | | | | 1/A6.00 | 2/A6.00 | - | | 1 | | |
| 107 | PAIR 6' - 0" | 7' - 0" | 1 3/4" | D2 | WD | PNT | F1 | HM | PNT | 1/A6.00 | 2/A6.00 | - | | 4 | - | |
| 108 | 3' - 0" | 7' - 0" | 1 3/4" | D1 | WD | PNT | F1 | HM | PNT | 1/A6.00 | 2/A6.00 | - | | 5 | - | |
| 109* | 3' - 0" | 7' - 0" | 1 3/4" | - | - | PNT | - | - | - | - | - | - | | ETR | - | Existing to Remain |
| 110 | 3' - 0" | 7' - 0" | 1 3/4" | D1 | WD | PNT | F1 | HM | PNT | 1/A6.00 | 2/A6.00 | - | | 6 | - | |
| 111 | 3' - 0" | 7' - 0" | 1 3/4" | D1 | WD | PNT | F1 | HM | PNT | 3/A6.00 | 4/A6.00 | - | | 7 | - | FIRE RATED |
| 112 | 3' - 0" | 7' - 0" | 1 3/4" | D1 | WD | PNT | F1 | HM | PNT | 1/A6.00 | 2/A6.00 | - | | 8 | - | FIRE RATED |
| 112A* | 3' - 0" | 7' - 0" | 1 3/4" | - | - | - | - | - | - | - | - | - | | ETR | - | Existing to Remain |
| 113* | 3' - 0" | 7' - 0" | 1 3/4" | - | - | PNT | F2 | WD | PNT | 3/A6.00 | 4/A6.00 | - | | ETR | - | ETR - Replace wood trim & repair Jamb if necessary |
| 114* | 3' - 0" | 7' - 0" | 1 3/4" | - | - | PNT | F2 | WD | PNT | 3/A6.00 | 4/A6.00 | - | | ETR | - | ETR - Replace wood trim & repair Jamb if necessary |
| 115* | 3' - 0" | 7' - 0" | 1 3/4" | D3 | WD | PNT | F2 | WD | PNT | 3/A6.00 | 4/A6.00 | - | | ETR | - | RELOCATE door panel - Replace wood trim & repair Jamb if necessary |
| 116* | 3' - 0" | 7' - 0" | 1 3/4" | - | - | PNT | F2 | WD | PNT | 3/A6.00 | 4/A6.00 | - | | ETR | - | ETR - Replace wood trim & repair Jamb if necessary |
| 117 | PAIR 6' - 0" | 7' - 0" | 1 3/4" | - | - | PNT | F2 | WD | PNT | 3/A6.00 | 4/A6.00 | - | | ETR | - | RELOCATE DOORS |
| 118* | 3' - 0" | 7' - 0" | 1 3/4" | - | - | PNT | F2 | WD | PNT | 3/A6.00 | 4/A6.00 | - | | ETR | - | ETR - Replace wood trim & repair Jamb if necessary |
| 118A | 3' - 8" | 7' - 0" | 1 3/4" | D1 | WD | PNT | | | | 1/A6.00 | 2/A6.00 | - | | 1 | | |
| 119* | 3' - 0" | 7' - 0" | 1 3/4" | - | - | PNT | F2 | WD | PNT | 3/A6.00 | 4/A6.00 | - | | - | - | ETR - Replace wood trim & repair Jamb if necessary |
| 120 | PAIR 6' - 0" | 7' - 0" | 1 3/4" | D2 | WD | PNT | F1 | HM | PNT | 1/A6.00 | 2/A6.00 | - | | 9 | - | |
| 120A* | 3' - 0" | 7' - 0" | 1 3/4" | - | - | - | | | | - | - | - | | ETR | - | Existing to Remain |
| 121* | 3' - 0" | 7' - 0" | 1 3/4" | D1 | WD | PNT | F2 | WD | PNT | 3/A6.00 | 4/A6.00 | - | | ETR | - | RELOCATE door panel - Replace wood trim & repair Jamb if necessary |
| 122* | 3' - 0" | 7' - 0" | 1 3/4" | - | - | PNT | F2 | WD | PNT | 3/A6.00 | 4/A6.00 | - | | ETR | - | ETR - Replace wood trim & repair Jamb if necessary |
| 123* | PAIR 6' - 0" | 7' - 0" | 1 3/4" | - | - | PNT | - | - | PNT | - | - | - | | ETR | - | Existing to Remain |
| E01* | PAIR 6' - 0" | 7' - 1" | 1 3/4" | - | - | PNT | - | - | PNT | - | - | - | | 14 | - | Existing to Remain - Provide new hardware set as scheduled |
| E02* | 9' - 4" | 8' - 8 7/32" | 2 29/32" | - | - | - | - | - | - | - | - | - | | 15 | - | Existing to Remain - Provide new hardware set as scheduled |
| E03* | 3' - 0" | 7' - 0" | 1 3/4" | - | - | PNT | - | - | PNT | - | - | - | | 15 | - | Existing to Remain - Provide new hardware set as scheduled |
| E04* | PAIR 5' - 0" | 7' - 0" | 1 3/4" | - | - | PNT | - | - | PNT | - | - | - | | 14 | - | Existing to Remain - Provide new hardware set as scheduled |
| E05* | 3' - 4" | 7' - 0" | 1 3/4" | - | - | PNT | - | - | PNT | - | - | - | | 12 | - | Existing to Remain - Provide new hardware set as scheduled |
| E06* | 3' - 0" | 7' - 0" | 1 3/4" | - | - | PNT | - | - | PNT | - | - | - | | 12 | - | Existing to Remain - Provide new hardware set as scheduled |
| E07* | 3' - 4" | 7' - 0" | 1 3/4" | - | - | PNT | - | - | PNT | - | - | - | | 12 | - | Existing to Remain - Provide new hardware set as scheduled |
| E08* | 3' - 4" | 7' - 0" | 1 3/4" | - | - | PNT | - | - | PNT | - | - | - | | 12 | - | Existing to Remain - Provide new hardware set as scheduled |

ETR = EXISTING TO REMAIN

## DOOR SCHEDULE SECOND FLOOR

| # | DOOR WIDTH | DOOR HEIGHT | DOOR THICK | DOOR TYPE | DOOR MAT | DOOR FIN | FRAME TYPE | FRAME MAT | FRAME FIN | HEAD | JAMB | SILL | WIDTH | HW SET | LABEL | REMARKS |
|---|---|---|---|---|---|---|---|---|---|---|---|---|---|---|---|---|
| 2nd Floor | | | | | | | | | | | | | | | | |
| 200* | 6' - 0" | 7' - 0" | 1 3/4" | - | HM | PNT | | | | - | - | - | | ETR | - | EXISTING RELOCATED PAIR OF DOORS. RE-USE AND INSTALL EXISTING HARDWARE AS REQUIRED. |
| 201* | 3' - 6" | 7' - 0" | 1 3/4" | - | HM | PNT | | | | - | - | - | 9" | 11 | | EXISTING DOOR - PROVIDE AND INSTALL CARD READERS AND DOOR CONTACT AS SPECIFIED |
| 202* | 3' - 0" | 5' - 4" | 1 3/4" | - | HM | PNT | | HM | PNT | - | - | | | 12 | | EXISTING DOOR - PROVIDE AND INSTALL DOOR CONTACT AS SPECIFIED |
| 203* | 3' - 0" | 7' - 0" | 1 3/4" | | | | | | | | | | | 10 | - | Existing to Remain - Provide new hardware set as scheduled |

ETR = EXISTING TO REMAIN

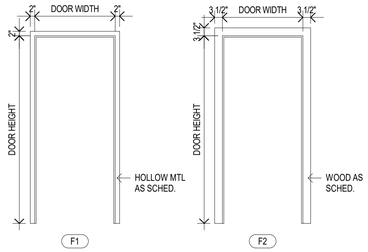


## FRAME TYPES

3/8" = 1'-0"

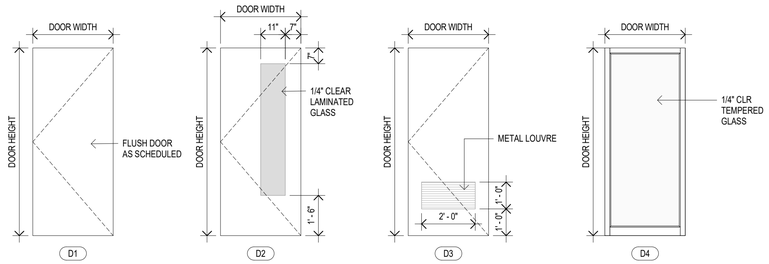


## DOOR TYPES

3/8" = 1'-0"

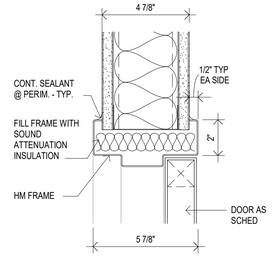


1 A6.00 Door - HEAD - HM TYP

3" = 1'-0"

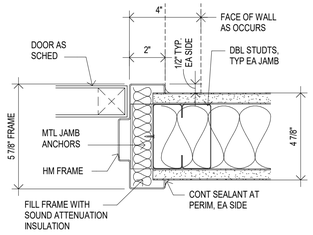


2 A6.00 Door - JAMB - HM TYP

3" = 1'-0"

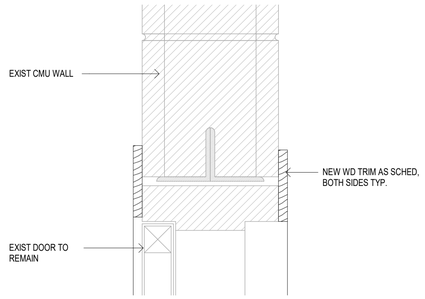


3 A6.00 JAMB - EXIST WOOD ON CMU

3" = 1'-0"

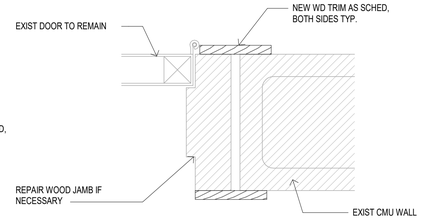


4 A6.00 JAMB - EXIST WOOD ON CMU

3" = 1'-0"

# JOSLIN RECREATION CENTER - CPF RENOVATION

17 Hyatt St., Providence, RI 02903

Owner:
City of Providence, Dept. of Public Property
25 Dorrance Street
Providence, Rhode Island 02903


ROWSE Architects
400 Massasoit Avenue
Suite 300, Second Floor
East Providence, Rhode Island
p. (401) 331-9200

2 Hampshire Street
Suite 106, First Floor
Foxboro, Massachusetts
p. (774) 215-0290
rowse@rowsearchitects.com



OWNERSHIP AND USE OF DOCUMENTS, DRAWINGS AND SPECIFICATIONS AS INSTRUMENTS OF PROFESSIONAL SERVICE, ARE, AND SHALL REMAIN, THE PROPERTY OF THE ARCHITECT. THESE DOCUMENTS ARE NOT TO BE USED, IN WHOLE OR IN PART, FOR ANY OTHER PROJECTS OR PURPOSES, OR BY ANY OTHER PARTIES THAN THOSE PROPERLY AUTHORIZED BY CONTRACT WITHOUT THE EXPRESS AUTHORIZATION OF THE ARCHITECT.


## GENERAL NOTES

1. CONTRACTOR SHALL VISIT SITE, PRIOR TO BID, AND CAREFULLY INVESTIGATE AND EXAMINE THE AREA OF WORK SO AS TO SATISFY HIMSELF AS TO THE NATURE AND LOCATION OF THE WORK. CONTRACTOR TO NOTE THE CHARACTER, QUALITY, QUANTITIES OF MATERIALS REQUIRED AND DIFFICULTIES TO BE ENCOUNTERED, THE KIND AND EXTENT OF EQUIPMENT AND FACILITIES NEEDED FOR PERFORMANCE OF THE WORK AND OTHER ITEMS WHICH MAY, IN ANY WAY, AFFECT THE WORK OR CONTRACTOR'S PERFORMANCE.

2. DRAWINGS DO NOT INCLUDE NECESSARY COMPONENTS FOR CONSTRUCTION SAFETY.

**Date:** 05/05/2025

**Drawn by:** Author **Proj. Mgr.:** Checker

**Revisions**

| No. | Date | Description |
|---|---|---|
| | | |

DOOR SCHEDULE

# A6.00

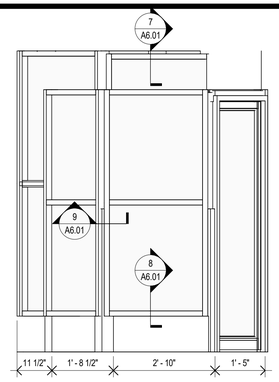


1 A6.01 ALUMINUM STOREFRONT S1
1/2" = 1'-0"

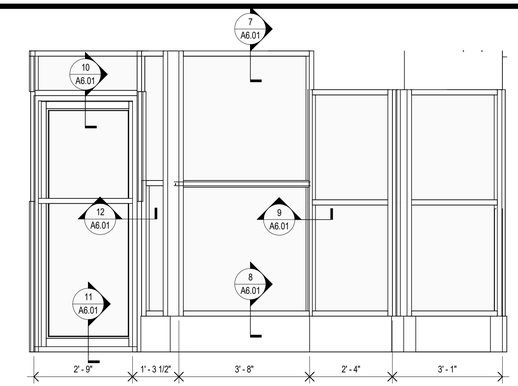


2 A6.01 ALUMINUM STOREFRONT S2
1/2" = 1'-0"

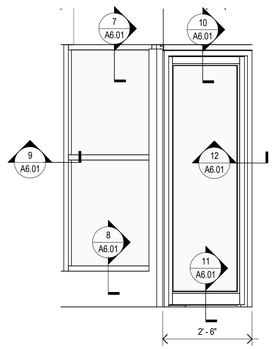


3 A6.01 ALUMINUM STOREFRONT S3
1/2" = 1'-0"

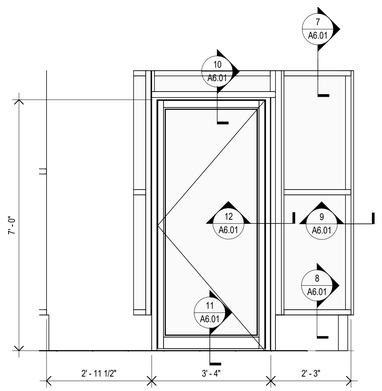


4 A6.01 ALUMINUM STOREFRONT S4
1/2" = 1'-0"

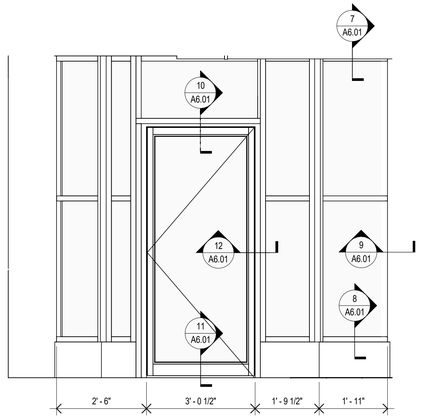


5 A6.01 ALUMINUM STOREFRONT S5
1/2" = 1'-0"

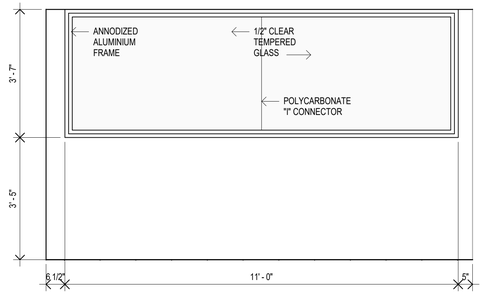


6 A6.01 PASS THROUGH WINDOW
1/2" = 1'-0"

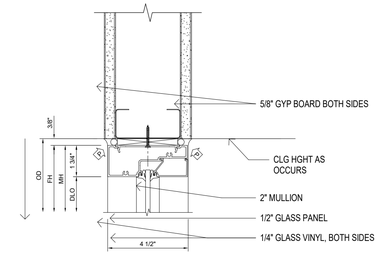


7 A6.01 Kawneer Storefront Head Detail
3" = 1'-0"

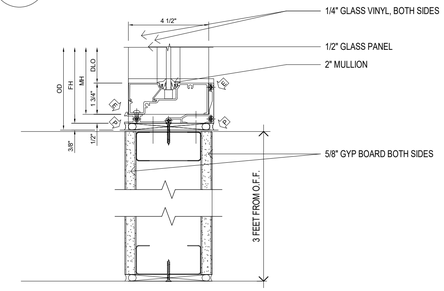


8 A6.01 Kawneer Storefront Sill Detail
3" = 1'-0"

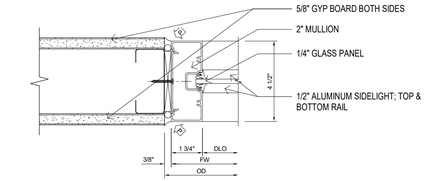


9 A6.01 Kawneer Storefront Jamb Detail
3" = 1'-0"

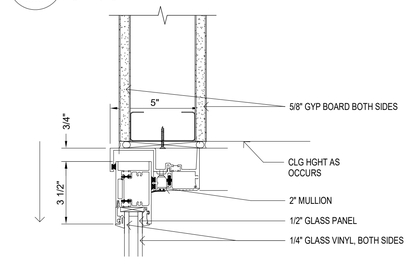


10 A6.01 Kawneer Door Head Detail
3" = 1'-0"

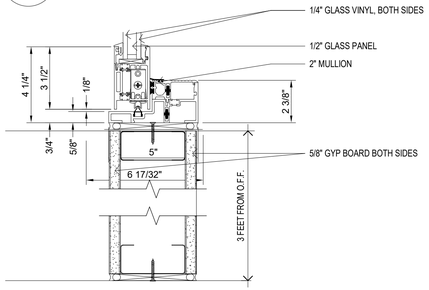


11 A6.01 Kawneer Door Sill Detail
3" = 1'-0"

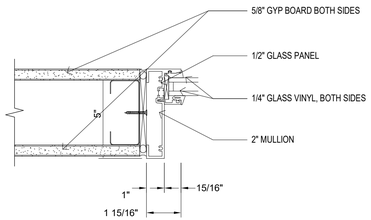


12 A6.01 Kawneer Door Jamb Detail
3" = 1'-0"

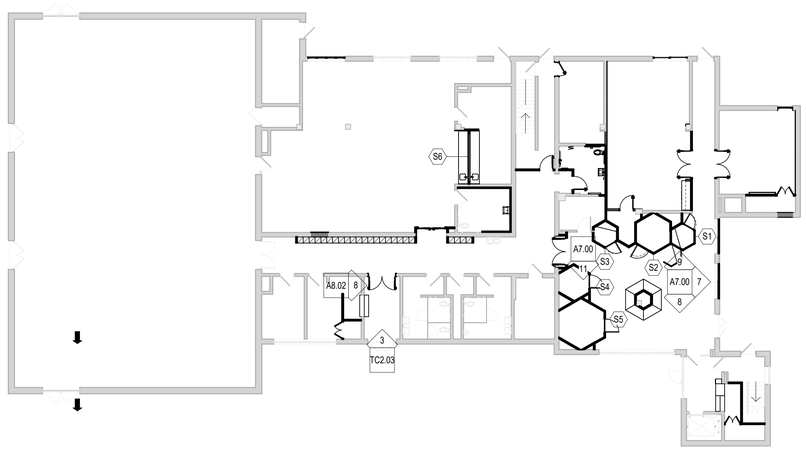


KeyPlan
1/16" = 1'-0"

# JOSLIN RECREATION CENTER - CPF RENOVATION

17 Hyatt St., Providence, RI 02903

Owner:
City of Providence, Dept. of Public Property
25 Dorrance Street
Providence, Rhode Island 02903

ROWSE Architects
400 Massasoit Avenue
Suite 300, Second Floor
East Providence, Rhode Island
p. (401) 331-9200

2 Hampshire Street
Suite 106, First Floor
Foxboro, Massachusetts
p. (774) 215-0290
rowse@rowsearchitects.com

OWNERSHIP AND USE OF DOCUMENTS, DRAWINGS AND SPECIFICATIONS AS INSTRUMENTS OF PROFESSIONAL SERVICE, ARE, AND SHALL REMAIN, THE PROPERTY OF THE ARCHITECT. THESE DOCUMENTS ARE NOT TO BE USED, IN WHOLE OR IN PART, FOR ANY OTHER PROJECTS OR PURPOSES, OR BY ANY OTHER PARTIES THAN THOSE PROPERLY AUTHORIZED BY CONTRACT WITHOUT THE EXPRESS AUTHORIZATION OF THE ARCHITECT.

## GENERAL NOTES

1. CONTRACTOR SHALL VISIT SITE, PRIOR TO BID, AND CAREFULLY INVESTIGATE AND EXAMINE THE AREA OF WORK SO AS TO SATISFY HIMSELF AS TO THE NATURE AND LOCATION OF THE WORK. CONTRACTOR TO NOTE THE CHARACTER, QUALITY, QUANTITIES OF MATERIALS REQUIRED AND DIFFICULTIES TO BE ENCOUNTERED, THE KIND AND EXTENT OF EQUIPMENT AND FACILITIES NEEDED FOR PERFORMANCE OF THE WORK AND OTHER ITEMS WHICH MAY, IN ANY WAY, AFFECT THE WORK OR CONTRACTOR'S PERFORMANCE.

2. DRAWINGS DO NOT INCLUDE NECESSARY COMPONENTS FOR CONSTRUCTION SAFETY.

**Date:** 05/05/2025
**Drawn by:** Author **Proj. Mgr.:** Checker
**Revisions**

| No. | Date | Description |
|---|---|---|
| | | |

INTERIOR ALUMINIUM FRAMES

# A6.01

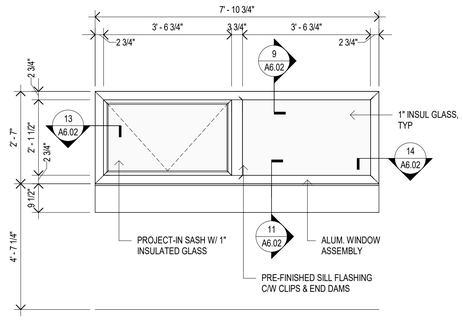


A Window Assembly A

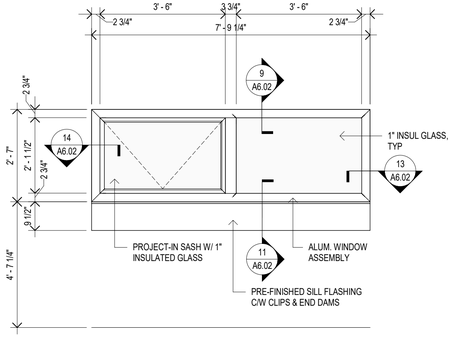


B Window Assembly B

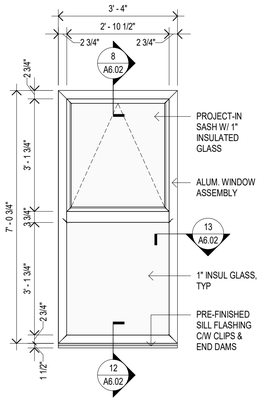


C Window Assembly C

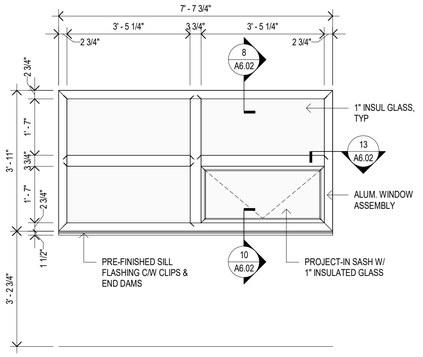


D Window Assembly D

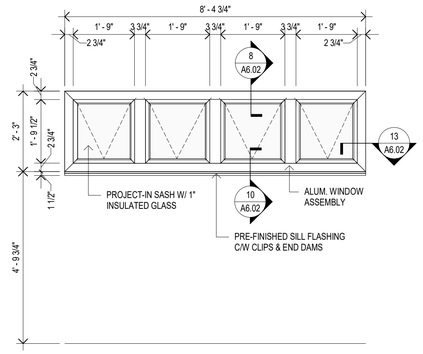


E Window Assembly E

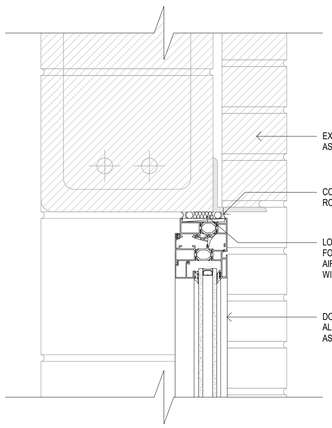


8 A6.02 HEAD @ BRICK VENEER
3" = 1'-0"

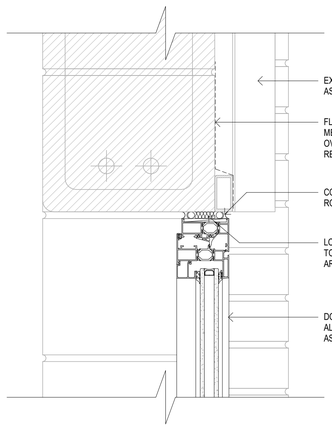


9 A6.02 HEAD @ METAL SIDING
3" = 1'-0"

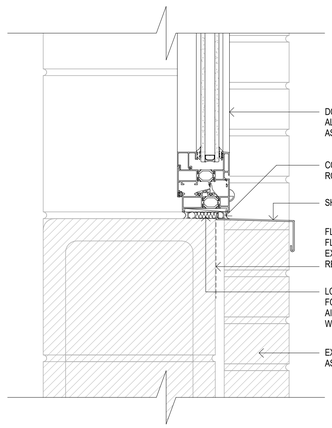


10 A6.02 SILL @ BRICK VENEER
3" = 1'-0"

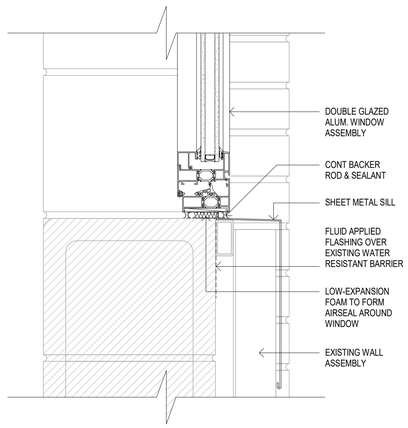


11 A6.02 SILL @ METAL SIDING
3" = 1'-0"

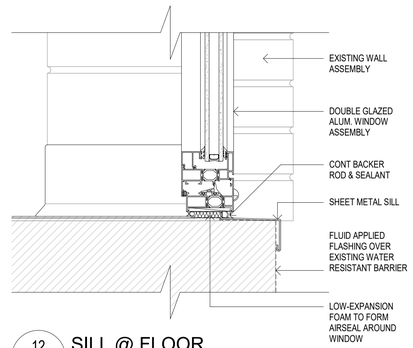


12 A6.02 SILL @ FLOOR
3" = 1'-0"

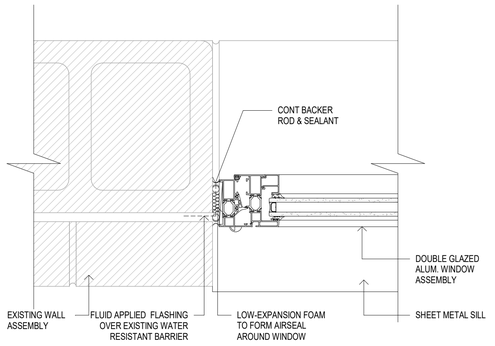


13 A6.02 JAMB @ BRICK
3" = 1'-0"

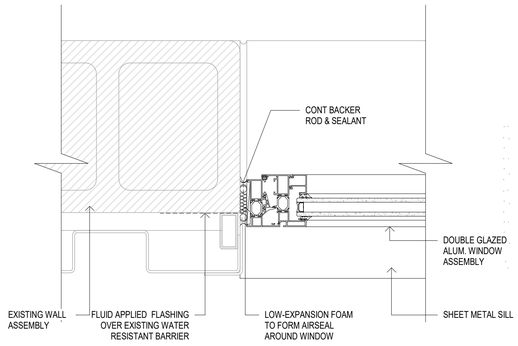


14 A6.02 JAMB @ METAL SIDING
3" = 1'-0"




SW Elevation
1/16" = 1'-0"

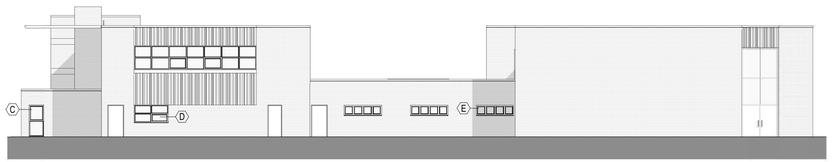


SE Elevation
1/16" = 1'-0"

# JOSLIN RECREATION CENTER - CPF RENOVATION

17 Hyatt St., Providence, RI 02903

Owner:
City of Providence, Dept. of Public Property
25 Dorrance Street
Providence, Rhode Island 02903

ROWSE Architects
400 Massasoit Avenue
Suite 300, Second Floor
East Providence, Rhode Island
p. (401) 331-9200

2 Hampshire Street
Suite 106, First Floor
Foxboro, Massachusetts
p. (774) 215-0290
rowse@rowsearchitects.com

OWNERSHIP AND USE OF DOCUMENTS, DRAWINGS AND SPECIFICATIONS AS INSTRUMENTS OF PROFESSIONAL SERVICE, ARE, AND SHALL REMAIN, THE PROPERTY OF THE ARCHITECT. THESE DOCUMENTS ARE NOT TO BE USED, IN WHOLE OR IN PART, FOR ANY OTHER PROJECTS OR PURPOSES, OR BY ANY OTHER PARTIES THAN THOSE PROPERLY AUTHORIZED BY CONTRACT WITHOUT THE EXPRESS AUTHORIZATION OF THE ARCHITECT.

## GENERAL NOTES

1. CONTRACTOR SHALL VISIT SITE, PRIOR TO BID, AND CAREFULLY INVESTIGATE AND EXAMINE THE AREA OF WORK SO AS TO SATISFY HIMSELF AS TO THE NATURE AND LOCATION OF THE WORK. CONTRACTOR TO NOTE THE CHARACTER, QUALITY, QUANTITIES OF MATERIALS REQUIRED AND DIFFICULTIES TO BE ENCOUNTERED, THE KIND AND EXTENT OF EQUIPMENT AND FACILITIES NEEDED FOR PERFORMANCE OF THE WORK AND OTHER ITEMS WHICH MAY, IN ANY WAY, AFFECT THE WORK OR CONTRACTOR'S PERFORMANCE.

2. DRAWINGS DO NOT INCLUDE NECESSARY COMPONENTS FOR CONSTRUCTION SAFETY.

**Date:** 05/05/2025
**Drawn by:** Author **Proj. Mgr.:** Checker
**Revisions**

| No. | Date | Description |
|---|---|---|
| | | |

## WINDOW SCHEDULE & DETAILS

# A6.02

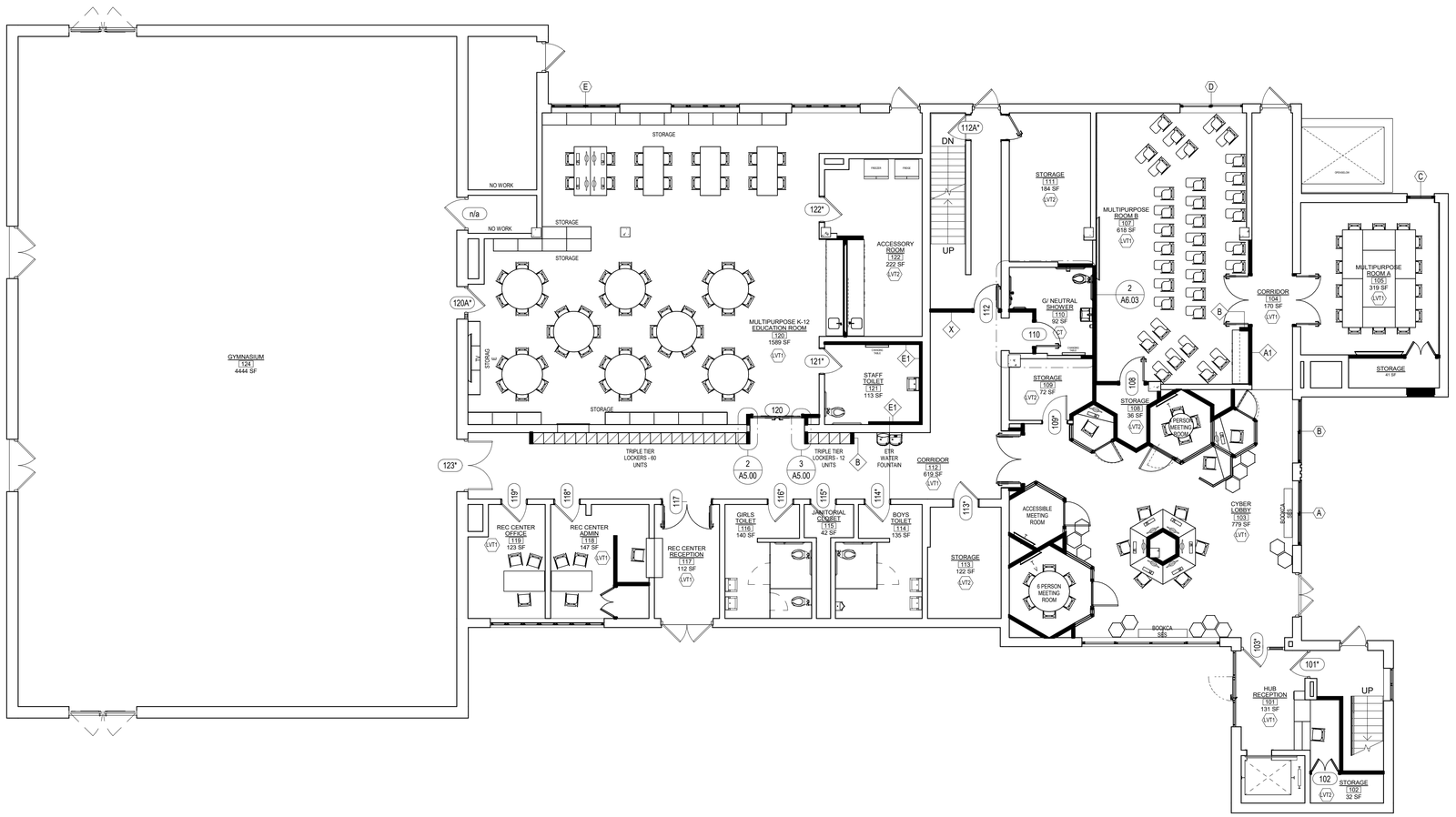


1 A6.03 First Floor Floor Finish

1/8" = 1'-0"

**ROOM FINISH SCHEDULE**

| ROOM | | FLOOR | | | WALLS | | CEILING | | | | |
|---|---|---|---|---|---|---|---|---|---|---|---|
| # | NAME | MAT | FINISH | BASE | MAT | FINISH | MAT | FINISH | HEIGHT | TYPE | REMARKS |
| 1st Floor | | | | | | | | | | | |
| 101 | HUB RECEPTION | CONC* | LVT1 | VB | CMU/GYP | PNT | ACT/GB | -/PNT | 9'-0" | | |
| 102 | STORAGE | CONC* | LVT2 | VB | CMU/GYP | PNT | GB | PNT | 6'-0" | | |
| 103 | CYBER LOBBY | CONC* | LVT1 | VB | CMU/GYP | PNT | GB/TECT/EXP | PNT/-/PNT | VARIES/11'-4" | | |
| 104 | CORRIDOR | CONC* | LVT1 | VB | CMU/GYP | PNT | ACT | - | 8'-3" | | |
| 105 | MULTIPURPOSE ROOM A | CONC* | LVT1 | VB | CMU | PNT | ACT | PNT | 8'-11" | | |
| 106 | STORAGE | CONC* | LVT2 | VB | CMU/GYP | PNT | EXP | PNT | 11'-4" | | |
| 107 | MULTIPURPOSE ROOM B | CONC* | LVT1 | VB | CMU/GYP | TECT/PNT | ACT/GB | -/PNT | 9'-0" | | |
| 108 | STORAGE | CONC* | LVT2 | VB | CMU/GYP | PNT | EXP | PNT | 11'-4" | | |
| 109 | STORAGE | CONC* | LVT2 | VB | CMU/GYP | PNT | EXP | PNT | 11'-4" | | |
| 110 | G/ NEUTRAL SHOWER | CONC* | CT1 | VB | CMU/GYP | CT/PNT | GB | PNT | 9'-0" | | |
| 111 | STORAGE | CONC* | LVT2 | VB | CMU | PNT | EXP | PNT | 11'-4" | | |
| 112 | CORRIDOR | CONC* | LVT1 | VB | CMU/GYP | PNT | ACT | -/PNT | 8'-3" | | |
| 113 | STORAGE | CONC* | LVT1 | VB | CMU | PNT | EXP | PNT | 9'-0" | | |
| 114 | BOYS TOILET | CONC* | - | -/VB | CMU | CT/PNT | ACT | - | 8'-3" | | |
| 115 | JANITORIAL CLOSET | CONC* | LVT1 | VB | CMU | PNT | EXP | PNT | 11'-4" | | |
| 116 | GIRLS TOILET | CONC* | - | -/VB | CMU | CT/PNT | ACT | - | 8'-3" | | |
| 117 | REC CENTER RECEPTION | CONC* | LVT1 | VB | CMU | PNT | ACT | -/PNT | 8'-3" | | |
| 118 | REC CENTER ADMIN | CONC* | LVT1 | VB | CMU | PNT | ACT | - | 8'-3" | | |
| 119 | REC CENTER OFFICE | CONC* | LVT1 | VB | CMU | PNT | ACT | - | 8'-3" | | |
| 120 | MULTIPURPOSE K-12 EDUCATION ROOM | CONC* | LVT1 | VB | CMU/GYP | PNT | ACT | -/PNT | 8'-0"/10'-0" | | |
| 121 | STAFF TOILET | CONC* | - | -/VB | CMU/GYP | CT/PNT | ACT | - | 8'-0" | | |
| 122 | ACCESSORY ROOM | CONC* | LVT2 | VB | CMU/GYP | PNT | ACT | - | 9'-0" | | |
| 124 | GYMNASIUM | CONC* | - | - | CMU | - | EXP | - | | | |

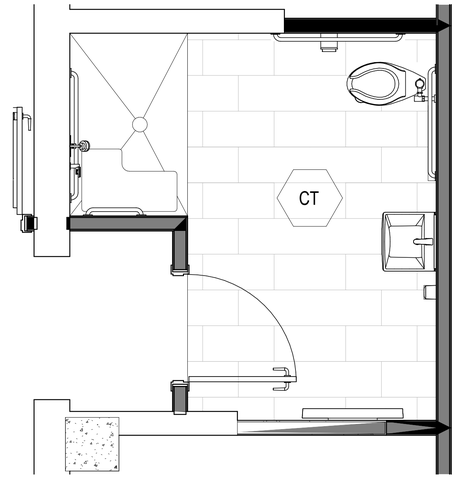


2 A6.03 Shower Room Tile Pattern

1/2" = 1'-0"

# JOSLIN RECREATION CENTER - CPF RENOVATION

17 Hyatt St., Providence, RI 02903

Owner:
City of Providence, Dept. of Public Property
25 Dorrance Street
Providence, Rhode Island 02903


ROWSE Architects

400 Massasoit Avenue
Suite 300, Second Floor
East Providence, Rhode Island
p. (401) 331-9200

2 Hampshire Street
Suite 106, First Floor
Foxboro, Massachusetts
p. (774) 215-0290

rowse@rowsearchitects.com



**OWNERSHIP AND USE OF DOCUMENTS, DRAWINGS AND SPECIFICATIONS AS INSTRUMENTS OF PROFESSIONAL SERVICE, ARE, AND SHALL REMAIN, THE PROPERTY OF THE ARCHITECT. THESE DOCUMENTS ARE NOT TO BE USED, IN WHOLE OR IN PART, FOR ANY OTHER PROJECTS OR PURPOSES, OR BY ANY OTHER PARTIES THAN THOSE PROPERLY AUTHORIZED BY CONTRACT WITHOUT THE EXPRESS AUTHORIZATION OF THE ARCHITECT.**


## GENERAL NOTES

1. CONTRACTOR SHALL VISIT SITE, PRIOR TO BID, AND CAREFULLY INVESTIGATE AND EXAMINE THE AREA OF WORK SO AS TO SATISFY HIMSELF AS TO THE NATURE AND LOCATION OF THE WORK. CONTRACTOR TO NOTE THE CHARACTER, QUALITY, QUANTITIES OF MATERIALS REQUIRED AND DIFFICULTIES TO BE ENCOUNTERED, THE KIND AND EXTENT OF EQUIPMENT AND FACILITIES NEEDED FOR PERFORMANCE OF THE WORK AND OTHER ITEMS WHICH MAY, IN ANY WAY, AFFECT THE WORK OR CONTRACTOR'S PERFORMANCE.

2. DRAWINGS DO NOT INCLUDE NECESSARY COMPONENTS FOR CONSTRUCTION SAFETY.

**Date:** 05/05/2025

**Drawn by:** Author **Proj. Mgr.:** Checker

**Revisions**

| No. | Date | Description |
|---|---|---|
| 1 | | |

ROOM FINISH SCHEDULE

# A6.03

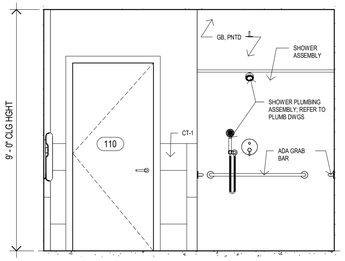


1 A7.00 Shower Room Interior Elevation
3/8" = 1'-0"

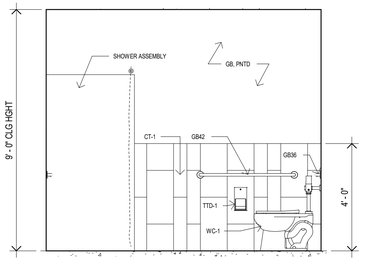


2 A7.00 Shower Room Interior Elevation
3/8" = 1'-0"

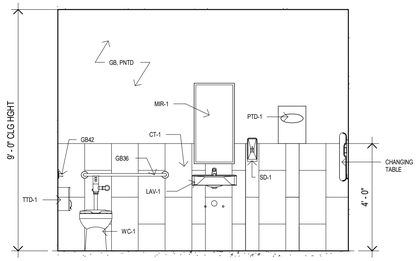


3 A7.00 Shower Room Interior Elevation
3/8" = 1'-0"

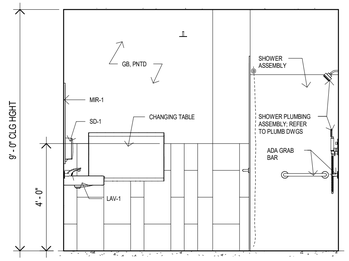


4 A7.00 Shower Room Interior Elevation
3/8" = 1'-0"

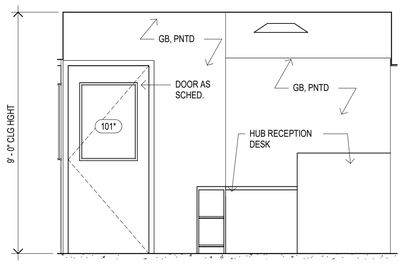


5 A7.00 Hub Reception Interior Elevation
3/8" = 1'-0"

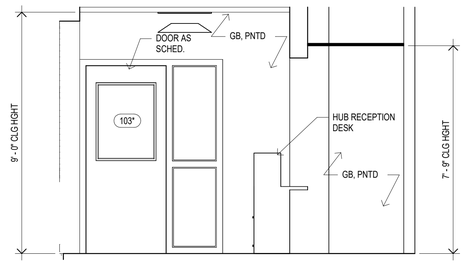


6 A7.00 Hub Reception Interior Elevation
3/8" = 1'-0"

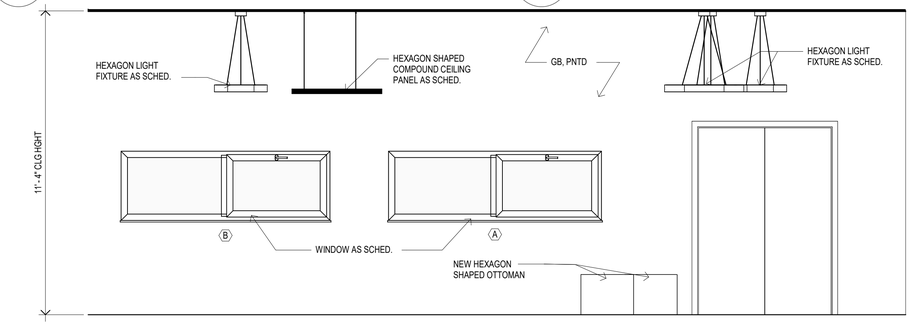


7 A7.00 Cyber Lobby Interior Elevation
3/8" = 1'-0"

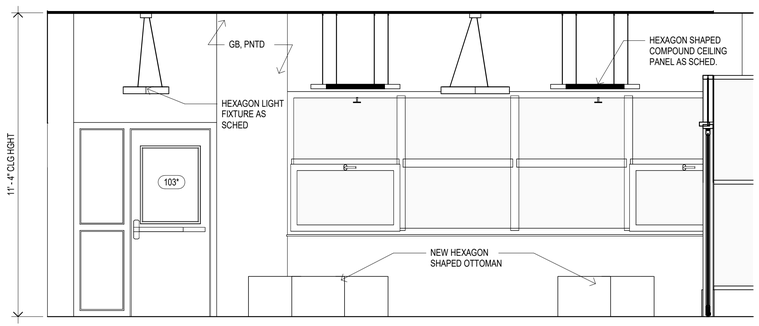


8 A7.00 Cyber Lobby Interior Elevation
3/8" = 1'-0"

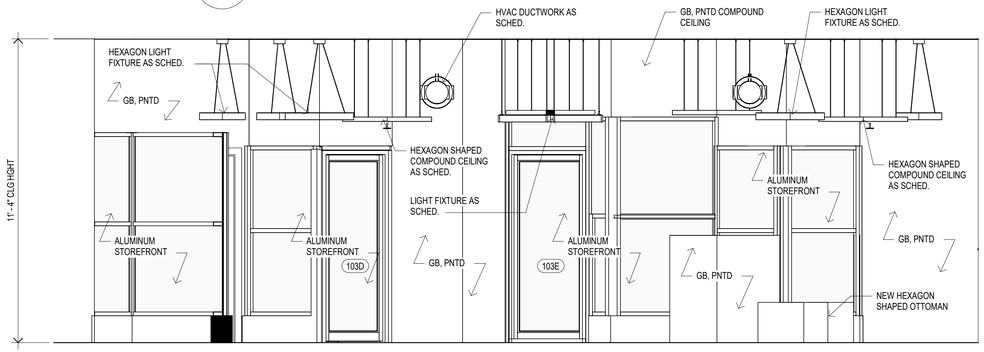


9 A7.00 Cyber Lobby Interior Elevation
3/8" = 1'-0"

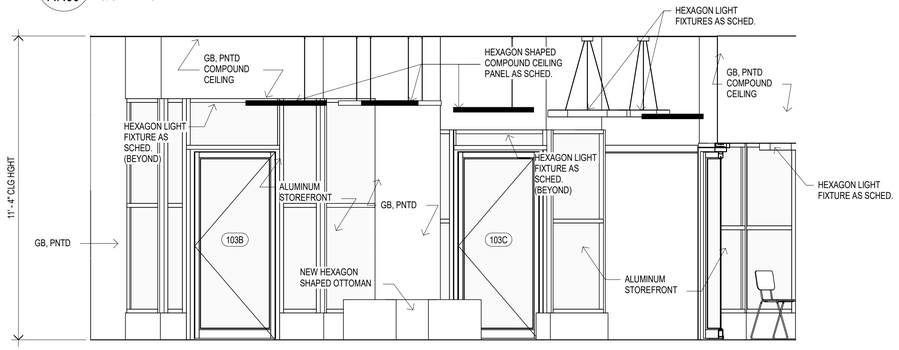


10 A7.00 Cyber Lobby Interior Elevation
3/8" = 1'-0"

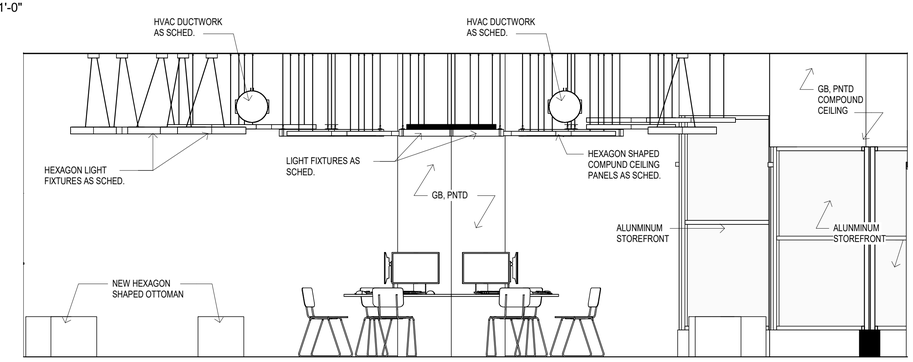


11 A7.00 Cyber Lobby Interior Elevation
3/8" = 1'-0"

# JOSLIN RECREATION CENTER - CPF RENOVATION

17 Hyatt St., Providence, RI 02903

Owner:
City of Providence, Dept. of Public Property
25 Dorrance Street
Providence, Rhode Island 02903


Rowse Architects
400 Massasoit Avenue
Suite 300, Second Floor
East Providence, Rhode Island
p. (401) 331-9200

2 Hampshire Street
Suite 106, First Floor
Foxboro, Massachusetts
p. (774) 215-0290
rowse@rowsearchitects.com



**OWNERSHIP AND USE OF DOCUMENTS, DRAWINGS AND SPECIFICATIONS AS INSTRUMENTS OF PROFESSIONAL SERVICE, ARE, AND SHALL REMAIN, THE PROPERTY OF THE ARCHITECT. THESE DOCUMENTS ARE NOT TO BE USED, IN WHOLE OR IN PART, FOR ANY OTHER PROJECTS OR PURPOSES, OR BY ANY OTHER PARTIES THAN THOSE PROPERLY AUTHORIZED BY CONTRACT WITHOUT THE EXPRESS AUTHORIZATION OF THE ARCHITECT.**


## GENERAL NOTES

1. CONTRACTOR SHALL VISIT SITE, PRIOR TO BID, AND CAREFULLY INVESTIGATE AND EXAMINE THE AREA OF WORK SO AS TO SATISFY HIMSELF AS TO THE NATURE AND LOCATION OF THE WORK. CONTRACTOR TO NOTE THE CHARACTER, QUALITY, QUANTITIES OF MATERIALS REQUIRED AND DIFFICULTIES TO BE ENCOUNTERED, THE KIND AND EXTENT OF EQUIPMENT AND FACILITIES NEEDED FOR PERFORMANCE OF THE WORK AND OTHER ITEMS WHICH MAY, IN ANY WAY, AFFECT THE WORK OR CONTRACTOR'S PERFORMANCE.

2. DRAWINGS DO NOT INCLUDE NECESSARY COMPONENTS FOR CONSTRUCTION SAFETY.

**Date:** 05/05/2025
**Drawn by:** Author **Proj. Mgr.:** Checker

**Revisions**

| No. | Date | Description |
|---|---|---|
| | | |

INTERIOR ELEVATIONS

# A7.00

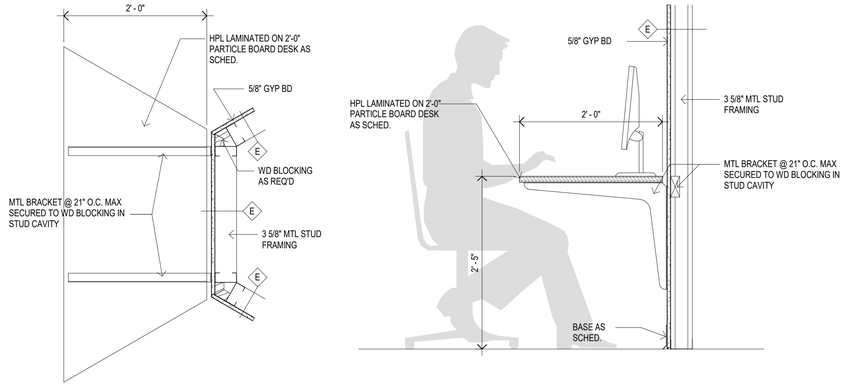


6 A8.00 **Millwork Detail**
1" = 1'-0"

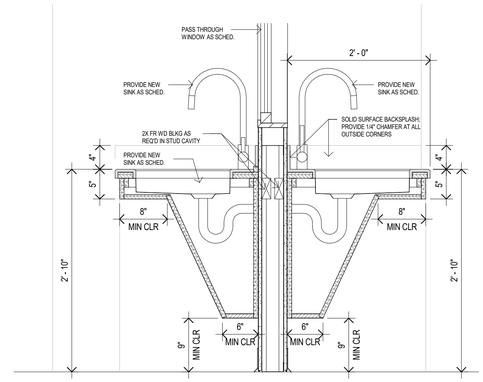


2 A8.00 **Millwork Detail**
1" = 1'-0"

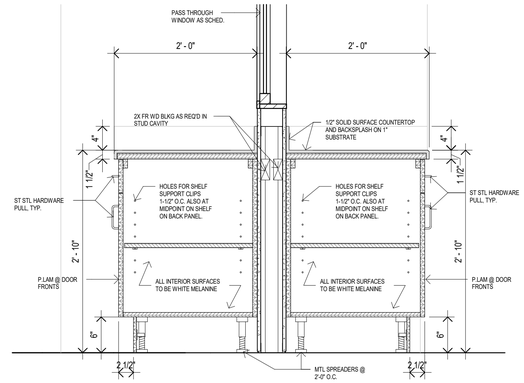


8 A8.00 **Millwork Detail 2**
1" = 1'-0"

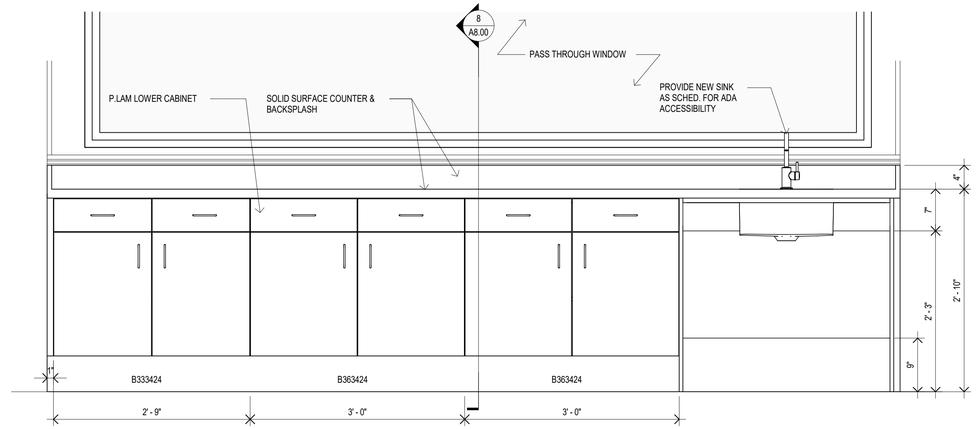


3 A8.00 **Mill - Rec Counter Elevation**
1" = 1'-0"

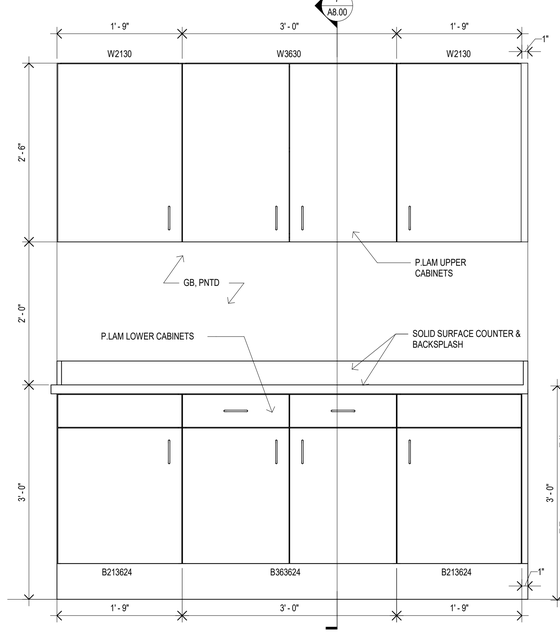


5 A8.00 **Mill - MultiP Counter Elevation**
1" = 1'-0"

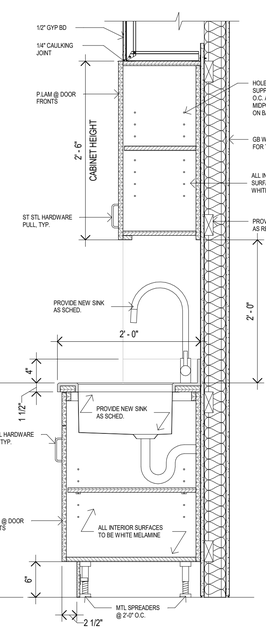


1 A8.00 **Millwork Detail**
1" = 1'-0"

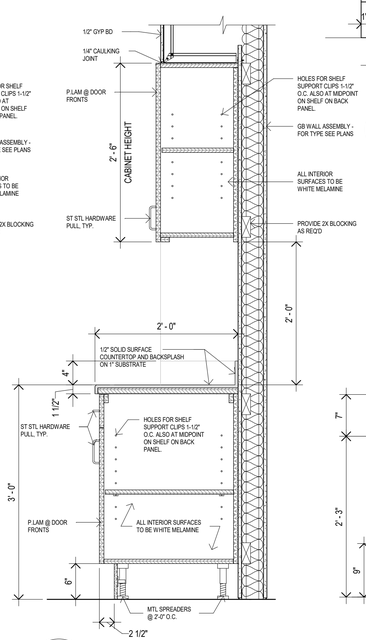


7 A8.00 **Millwork Detail 1**
1" = 1'-0"

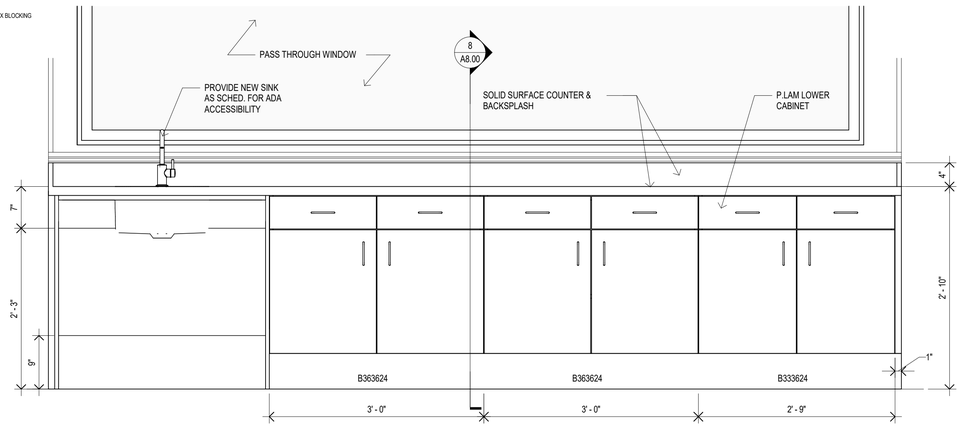


4 A8.00 **Mill - AR Counter Elevation**
1" = 1'-0"

# JOSLIN RECREATION CENTER - CPF RENOVATION

17 Hyatt St., Providence, RI 02903

Owner:
City of Providence, Dept. of Public Property
25 Dorrance Street
Providence, Rhode Island 02903


ROWSE Architects
400 Massasoit Avenue
Suite 300, Second Floor
East Providence, Rhode Island
p. (401) 331-9200

2 Hampshire Street
Suite 106, First Floor
Foxboro, Massachusetts
p. (774) 215-0290
rowse@rowsearchitects.com



**OWNERSHIP AND USE OF DOCUMENTS, DRAWINGS AND SPECIFICATIONS AS INSTRUMENTS OF PROFESSIONAL SERVICE, ARE, AND SHALL REMAIN, THE PROPERTY OF THE ARCHITECT. THESE DOCUMENTS ARE NOT TO BE USED, IN WHOLE OR IN PART, FOR ANY OTHER PROJECTS OR PURPOSES, OR BY ANY OTHER PARTIES THAN THOSE PROPERLY AUTHORIZED BY CONTRACT WITHOUT THE EXPRESS AUTHORIZATION OF THE ARCHITECT.**


## GENERAL NOTES

1. CONTRACTOR SHALL VISIT SITE, PRIOR TO BID, AND CAREFULLY INVESTIGATE AND EXAMINE THE AREA OF WORK SO AS TO SATISFY HIMSELF AS TO THE NATURE AND LOCATION OF THE WORK. CONTRACTOR TO NOTE THE CHARACTER, QUALITY, QUANTITIES OF MATERIALS REQUIRED AND DIFFICULTIES TO BE ENCOUNTERED, THE KIND AND EXTENT OF EQUIPMENT AND FACILITIES NEEDED FOR PERFORMANCE OF THE WORK AND OTHER ITEMS WHICH MAY, IN ANY WAY, AFFECT THE WORK OR CONTRACTOR'S PERFORMANCE.

2. DRAWINGS DO NOT INCLUDE NECESSARY COMPONENTS FOR CONSTRUCTION SAFETY.

**Date:** 05/05/2025
**Drawn by:** Author **Proj. Mgr.:** Checker

**Revisions**

| No. | Date | Description |
|---|---|---|
| | | |

MILLWORK DETAILS

# A8.00

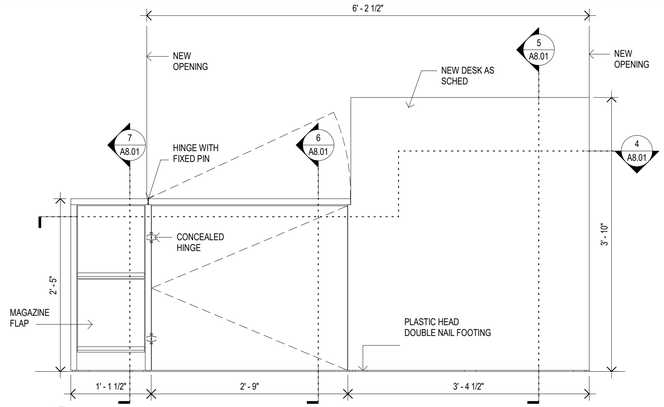


1 A8.01 **Front Elevation**
1" = 1'-0"

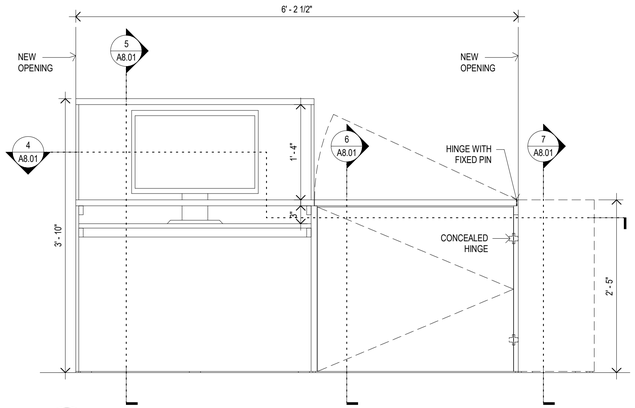


2 A8.01 **Back Elevation**
1" = 1'-0"

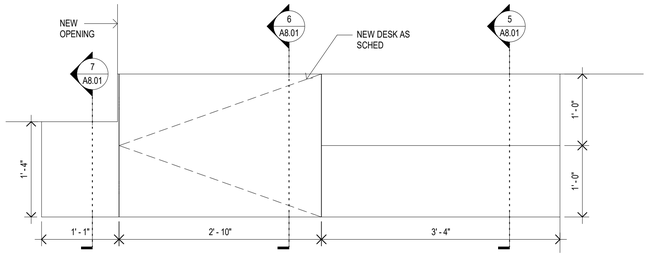


3 A8.01 **Floor Plan**
1" = 1'-0"

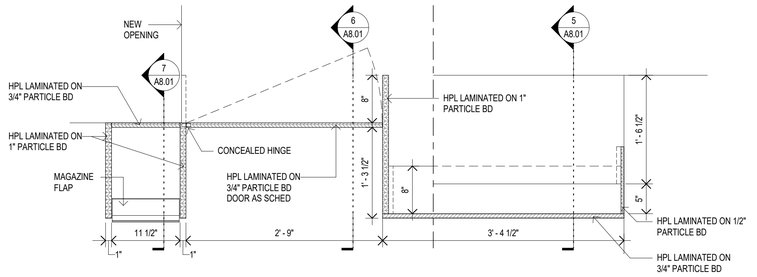


4 A8.01 **Plan Detail**
1" = 1'-0"

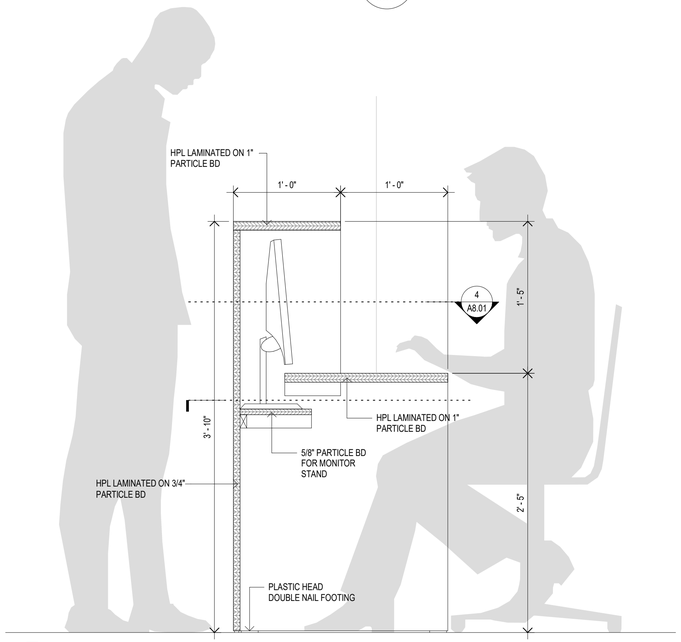


5 A8.01 **Section Detail**
1 1/2" = 1'-0"

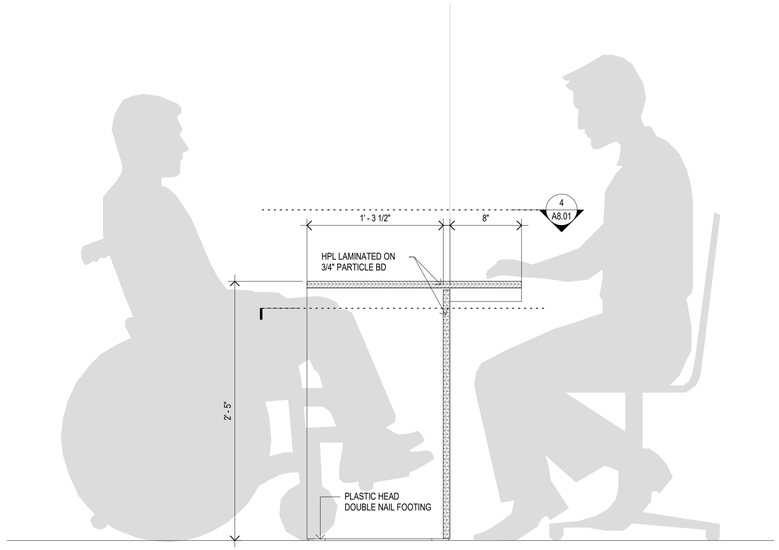


6 A8.01 **Section Detail**
1 1/2" = 1'-0"

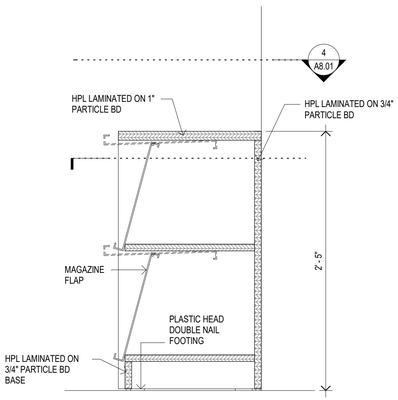


7 A8.01 **Section Detail**
1 1/2" = 1'-0"

# JOSLIN RECREATION CENTER - CPF RENOVATION

17 Hyatt St., Providence, RI 02903

Owner:
City of Providence, Dept. of Public Property
25 Dorrance Street
Providence, Rhode Island 02903


ROWSE Architects

400 Massasoit Avenue
Suite 300, Second Floor
East Providence, Rhode Island
p. (401) 331-9200

2 Hampshire Street
Suite 106, First Floor
Foxboro, Massachusetts
p. (774) 215-0290

rowse@rowsearchitects.com



**OWNERSHIP AND USE OF DOCUMENTS, DRAWINGS AND SPECIFICATIONS AS INSTRUMENTS OF PROFESSIONAL SERVICE, ARE, AND SHALL REMAIN, THE PROPERTY OF THE ARCHITECT. THESE DOCUMENTS ARE NOT TO BE USED, IN WHOLE OR IN PART, FOR ANY OTHER PROJECTS OR PURPOSES, OR BY ANY OTHER PARTIES THAN THOSE PROPERLY AUTHORIZED BY CONTRACT WITHOUT THE EXPRESS AUTHORIZATION OF THE ARCHITECT.**


## GENERAL NOTES

1. CONTRACTOR SHALL VISIT SITE, PRIOR TO BID, AND CAREFULLY INVESTIGATE AND EXAMINE THE AREA OF WORK SO AS TO SATISFY HIMSELF AS TO THE NATURE AND LOCATION OF THE WORK. CONTRACTOR TO NOTE THE CHARACTER, QUALITY, QUANTITIES OF MATERIALS REQUIRED AND DIFFICULTIES TO BE ENCOUNTERED, THE KIND AND EXTENT OF EQUIPMENT AND FACILITIES NEEDED FOR PERFORMANCE OF THE WORK AND OTHER ITEMS WHICH MAY, IN ANY WAY, AFFECT THE WORK OR CONTRACTOR'S PERFORMANCE.

2. DRAWINGS DO NOT INCLUDE NECESSARY COMPONENTS FOR CONSTRUCTION SAFETY.

**Date:** 05/05/2025
**Drawn by:** Author **Proj. Mgr.:** Checker

**Revisions**

| No. | Date | Description |
|---|---|---|
| | | |

MILLWORK DETAILS

# A8.01

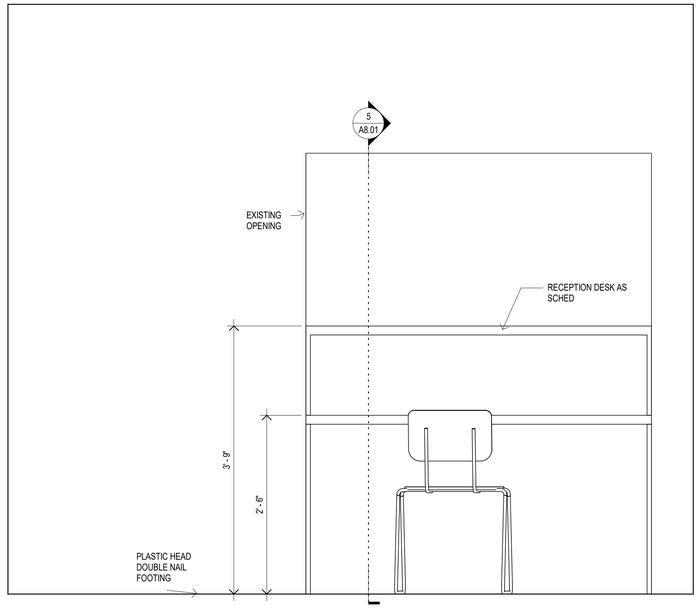


8 A8.02 Front Desk Reception Elevation
1" = 1'-0"

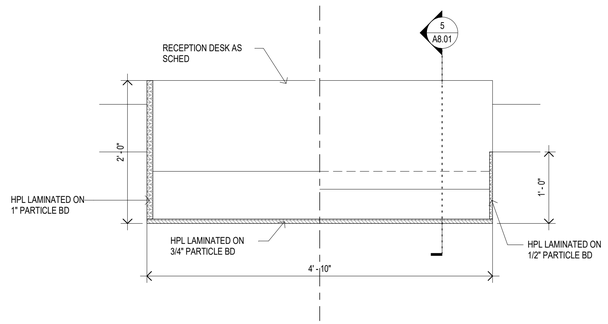


7 A8.02 Millwork Detail
1" = 1'-0"

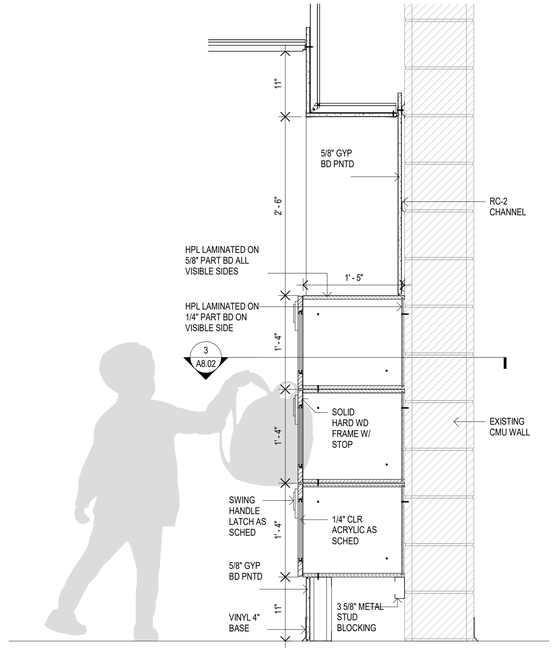


1 A8.02 Mill - Cubbies
1" = 1'-0"

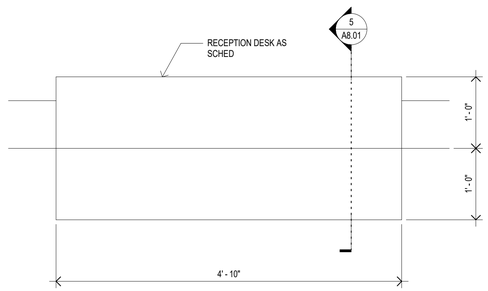


6 A8.02 Millwork Detail
1" = 1'-0"

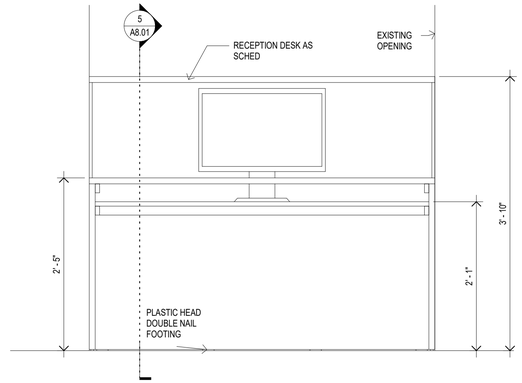


5 A8.02 Millwork Detail
1" = 1'-0"

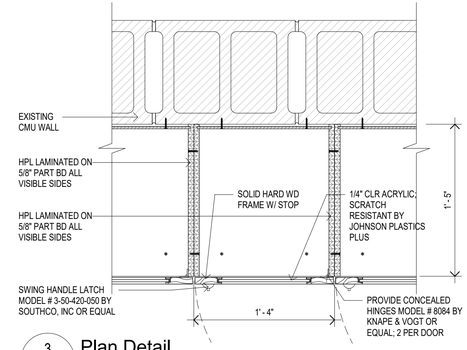


3 A8.02 Plan Detail
1 1/2" = 1'-0"

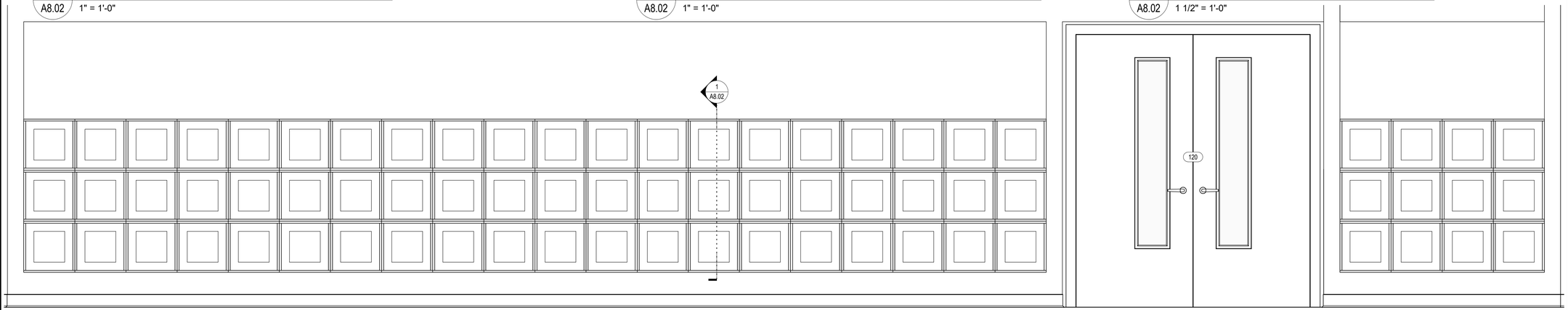


2 A8.02 Mill - Cubbies Elevation
3/4" = 1'-0"

# JOSLIN RECREATION CENTER - CPF RENOVATION

17 Hyatt St., Providence, RI 02903

Owner:
City of Providence, Dept. of Public Property
25 Dorrance Street
Providence, Rhode Island 02903


Rowse Architects
400 Massasoit Avenue
Suite 300, Second Floor
East Providence, Rhode Island
p. (401) 331-9200

2 Hampshire Street
Suite 106, First Floor
Foxboro, Massachusetts
p. (774) 215-0290
rowse@rowsearchitects.com



OWNERSHIP AND USE OF DOCUMENTS, DRAWINGS AND SPECIFICATIONS AS INSTRUMENTS OF PROFESSIONAL SERVICE, ARE, AND SHALL REMAIN, THE PROPERTY OF THE ARCHITECT. THESE DOCUMENTS ARE NOT TO BE USED, IN WHOLE OR IN PART, FOR ANY OTHER PROJECTS OR PURPOSES, OR BY ANY OTHER PARTIES THAN THOSE PROPERLY AUTHORIZED BY CONTRACT WITHOUT THE EXPRESS AUTHORIZATION OF THE ARCHITECT.


## GENERAL NOTES

1. CONTRACTOR SHALL VISIT SITE, PRIOR TO BID, AND CAREFULLY INVESTIGATE AND EXAMINE THE AREA OF WORK SO AS TO SATISFY HIMSELF AS TO THE NATURE AND LOCATION OF THE WORK. CONTRACTOR TO NOTE THE CHARACTER, QUALITY, QUANTITIES OF MATERIALS REQUIRED AND DIFFICULTIES TO BE ENCOUNTERED, THE KIND AND EXTENT OF EQUIPMENT AND FACILITIES NEEDED FOR PERFORMANCE OF THE WORK AND OTHER ITEMS WHICH MAY, IN ANY WAY, AFFECT THE WORK OR CONTRACTOR'S PERFORMANCE.

2. DRAWINGS DO NOT INCLUDE NECESSARY COMPONENTS FOR CONSTRUCTION SAFETY.

**Date:** 05/05/2025
**Drawn by:** Author **Proj. Mgr.:** Checker

**Revisions**

| No. | Date | Description |
|---|---|---|
| | | |

MILLWORK DETAILS

A8.02

## A. GENERAL STRUCTURAL REQUIREMENTS

1. ALL METHODS OF CONSTRUCTION, DETAILS, NOTES, ETC., INDICATED ON THE DRAWINGS ARE TO BE CONSIDERED TYPICAL FOR ALL SIMILAR CONDITIONS.

2. CONSTRUCTION SHALL BE MADE FROM APPROVED SHOP DRAWINGS ONLY.

3. ANY DISCREPANCIES ON THESE PLANS WITH REGARD TO DIMENSIONS OR CONDITIONS SHALL BE BROUGHT TO THE ATTENTION OF THE ENGINEER BEFORE PROCEEDING WITH THE AFFECTED PORTION OF WORK.

4. ALL APPLICABLE FEDERAL, STATE, AND MUNICIPAL REGULATIONS SHALL BE FOLLOWED, INCLUDING THE FEDERAL DEPARTMENT OF LABOR OCCUPATIONAL SAFETY AND HEALTH ACT AND THE RHODE ISLAND STATE BUILDING CODE.

5. THE LATEST EDITION OF THE FOLLOWING LISTED CODES SHALL APPLY. IN CASE OF CONFLICT, THE MORE RIGID REQUIREMENTS AND CODES SHALL GOVERN.

   A. RHODE ISLAND STATE BUILDING CODE (STATE CODE): INTERNATIONAL BUILDING CODE, 2018 EDITION AND ITS APPLICABLE REFERENCED STANDARDS.

   B. AMERICAN INSTITUTE OF STEEL CONSTRUCTION SPECIFICATIONS AND ITS CODE OF STANDARD PRACTICE (AISC).

   C. AMERICAN CONCRETE INSTITUTE BUILDING CODE REQUIREMENTS FOR REINFORCED CONCRETE, ACI 318.

   D. AMERICAN CONCRETE INSTITUTE BUILDING CODE REQUIREMENTS FOR CONCRETE MASONRY STRUCTURES, ACI 530 AND ACI 530.1.

6. THE DESIGN LOADS ARE RESISTED BY THE COMPLETED STRUCTURE ACTING AS A UNIT. THE CONTRACTOR SHALL DESIGN AND PROVIDE ANY AND ALL TEMPORARY BRACING, SHORING, OR ADDITIONAL REINFORCEMENT NECESSARY TO RESIST LOADS IMPOSED ON ANY PORTION OF THE STRUCTURE THROUGHOUT ALL STAGES OF CONSTRUCTION. THE SHORING SHALL BE DESIGNED TO RESIST ALL DEAD LOADS AND ANY APPLICABLE CONSTRUCTION LOADS.

7. ALL SHORING DESIGNS AND PLANS SHALL BE STAMPED BY A RHODE ISLAND REGISTERED PROFESSIONAL ENGINEER.

8. NOTES AND TYPICAL DETAILS APPLY TO ALL STRUCTURAL WORK UNLESS OTHERWISE NOTED. FOR CONDITIONS NOT SPECIFICALLY SHOWN PROVIDE DETAILS OF SIMILAR NATURE. VERIFY APPLICABILITY BY SUBMITTING SHOP DRAWINGS FOR REVIEW.

9. PLANS SHALL NOT BE SCALED FOR DIMENSIONS.

10. ARCHITECTURAL AND MEP DRAWINGS MUST BE USED IN CONJUNCTION WITH THE STRUCTURAL DRAWINGS DURING ALL PHASES OF CONSTRUCTION.

## B. DESIGN LOADS

1. GENERAL:
   - A. BUILDING RISK CATEGORY.....III

2. ROOF LIVE LOADS (SNOW):
   - A. IMPORTANCE FACTOR.....1.1
   - B. GROUND SNOW LOAD (Pg).....30 PSF
   - C. FLAT ROOF SNOW LOAD (Pf).....30 PSF
   - D. EXPOSURE FACTOR (Ce).....1.0
   - E. THERMAL FACTOR (Ct).....1.0

3. WIND LOADS:
   - A. IMPORTANCE FACTOR.....1.0
   - B. ULTIMATE WIND DESIGN SPEED (Vult).....134 mph
   - C. NOMINAL DESIGN WIND SPEED (Vasd).....104 mph
   - D. EXPOSURE CATEGORY.....B
   - E. ENCLOSED BUILDING (Gcpi).....+/- 0.18

4. EARTHQUAKE LOADS:
   - A. IMPORTANCE FACTOR.....1.25
   - B. MAPPED SPECTRAL RESPONSE ACCELERATIONS (Ss, S1).....0.176, 0.062
   - C. SITE CLASS.....D (ASSUMED)
   - D. DESIGN SPECTRAL COEFFICIENTS (Sds, Sd1).....0.188, 0.099
   - E. SEISMIC DESIGN CATEGORY.....B
   - F. DESIGN PROCEDURE.....EQUIVALENT LATERAL FORCE PROCEDURE

## C. MASONRY

1. CONCRETE MASONRY UNITS SHALL BE ASTM C90, TYPE I, NORMAL WEIGHT HOLLOW LOAD BEARING UNITS, UNLESS NOTED OTHERWISE. THE AVERAGE ASTM C1314 PRISM STRENGTH SHALL BE A MINIMUM OF 1,900 PSI.

2. JOINT REINFORCEMENT SHALL BE PREFABRICATED FROM 9-GAUGE DEFORMED WIRE CONFORMING TO ASTM A1064, JOINT REINFORCEMENT SHALL BE HOT-DIPPED GALVANIZED IN CONFORMANCE WITH ASTM A153. USE EXTRA HEAVY DUTY LADDER TYPE AT 16" O.C. VERTICAL -3/16" SIDE RODS AND 9 GA. CROSS RODS.

3. REINFORCING BARS SHALL CONFORM TO ASTM A615, GRADE 60.

4. MORTAR SHALL BE ASTM C270, TYPE M OR S PORTLAND CEMENT MORTAR (LOAD BEARING WALLS) AND TYPE N PORTLAND CEMENT MORTAR (NON-LOAD BEARING WALLS). DO NOT USE CALCIUM CHLORIDE IN MORTAR OR GROUT.

5. MASONRY SHALL BE SET ON FULL MORTAR BED.

6. GROUT FILL FOR MASONRY CELLS, LINTELS, AND BOND BEAMS SHALL CONFORM TO ASTM C476 AND HAVE A MINIMUM 28-DAY COMPRESSIVE STRENGTH OF 2,500 PSI.

7. ALL REINFORCING SHALL BE GROUTED SOLID CONTINUOUSLY IN 4" OR WIDER CELLS OR BOND BEAMS.

8. ALL MASONRY WALLS SHALL BE LATERALLY BRACED AGAINST FAILURE OR COLLAPSE UNTIL ANCHORED BY THE STRUCTURE.

9. SPECIAL INSPECTOR SHALL INSPECT ALL GROUTING OPERATIONS AND THE INSTALLATION OF REINFORCING IN LOAD BEARING CONCRETE MASONRY WALLS.

10. REINFORCE WALLS AS SHOWN ON PLANS.

## D. REINFORCING STEEL

1. REINFORCING BARS SHALL BE DETAILED IN ACCORDANCE WITH ACI 315 MANUAL OF STANDARD PRACTICE FOR DETAILING REINFORCED CONCRETE STRUCTURES AND THE STATE CODE.

2. COMPLETE SHOP DRAWINGS AND SCHEDULES OF ALL REINFORCING STEEL SHALL BE PREPARED BY THE CONTRACTOR AND SUBMITTED TO THE ENGINEER FOR APPROVAL PRIOR TO COMMENCEMENT OF THAT PORTION OF THE WORK. ALL ACCESSORIES MUST BE SHOWN ON THE SHOP DRAWINGS.

3. REINFORCING BARS SHALL CONFORM TO ASTM A615 OR A706 (WELDABLE) GRADE 60.

4. REINFORCING STEEL SHALL BE UNCOATED, UNLESS NOTED OTHERWISE. HOWEVER, ALL SUPPORTS SUCH AS CHAIRS, BOLSTERS, SPACERS, BLOCKS AND HANGERS SHALL BE OF NON-CORROSIVE MATERIAL. PROVIDE MINIMUM #5 SUPPORT BAR.

5. UNLESS NOTED ON THE DRAWINGS, THE MINIMUM CONCRETE PROTECTION (CLEAR COVER) FOR CAST-IN-PLACE CONCRETE COVER SHALL BE AS FOLLOWS:

   A. CONCRETE PLACED AGAINST EARTH.....3"
   B. FORMED CONCRETE EXPOSED TO EARTH OR WATER.....2"

6. ALL MECHANICAL SLEEVE CONNECTIONS SHALL CONFORM TO ACI 318 REQUIREMENTS AND DEVELOP IN TENSION AND COMPRESSION AT LEAST 125% OF THE YIELD STRENGTH OF THE BAR.

7. WELDED WIRE FABRIC (WWF) SHALL CONFORM TO ASTM A1064 AND SHALL BE SUPPLIED IN FLAT SHEETS ONLY. SPLICES OF WWF SHALL BE AT LEAST 12 INCHES.

8. ALL REINFORCEMENT SHALL BE CONTINUOUS THROUGH CONSTRUCTION JOINTS.

## D. REINFORCING STEEL (CONT.)

9. UNLESS NOTED OTHERWISE, BARS SHALL BE CONTINUOUS AND SHALL RUN CONTINUOUSLY AROUND CORNERS AND LAPPED AT NECESSARY SPLICES OR HOOKED AT DISCONTINUOUS ENDS. SPLICES SHALL GENERALLY OCCUR AT MID-SPAN FOR TOP AND MIDDLE BARS, AT SUPPORT FOR BOTTOM BARS AND SHALL BE STAGGERED WHEREVER POSSIBLE.

10. BARS SHALL NOT BE CUT OR OMITTED FOR SLEEVE OR OPENINGS IN FLOORS. BARS MAY BE MOVED LATERALLY WITHOUT CHANGING THE DISTANCE FROM THE FACE OF CONCRETE. NO BARS SHALL BE BENT IN FIELD WITHOUT APPROVAL OF THE ENGINEER.

11. PIPES AND SLEEVES EMBEDDED IN CONCRETE SHALL NOT BE LARGER IN OUTSIDE DIAMETER THAN 1/4 THE THICKNESS OF THE SLAB OR WALL IN WHICH THEY ARE EMBEDDED, UNLESS OTHERWISE SHOWN ON THE DRAWINGS, NOR SHALL THEY BE LOCATED SO AS TO IMPAIR THE STRENGTH OF THE CONCRETE.

12. MINIMUM REINFORCEMENT DEVELOPMENT LENGTH AND LAP SPLICE LENGTHS SHALL BE IN ACCORDANCE WITH ACI 318 FOR CLASS B LAPS UNLESS OTHERWISE NOTED ON THE DRAWINGS.

## E. STRUCTURAL STEEL

1. DESIGN FABRICATION AND ERECTION SHALL BE IN ACCORDANCE WITH AISC SPECIFICATION FOR BUILDINGS.

2. NEW STRUCTURAL STEEL SHALL CONFORM TO THE FOLLOWING:

| | | |
|---|---|---|
| A. STRUCTURAL STEEL | A572 OR A992 GR. 50 | Fy=50 KSI |
| B. TYPICAL PLATES AND ANGLES | ASTM A36 | Fy=36 KSI |
| C. STRUCTURAL TUBING | ASTM A500, GR. B | Fy=46 KSI |
| D. HIGH STRENGTH BOLTS | ASTM F3125 (GR. A325 TYPE I) | Fy=92 KSI |
| E. CAST-IN-PLACE ANCHOR RODS | F1554 (GRADE 36) | Fy=36 KSI |
| F. HEADED STUDS | A108 GR. 50 | Fy=50 KSI |
| G. DRILL & EPOXY ANCHOR RODS | A449 | Fy=92 KSI |

3. SHAPES NOTED "GALV." ON DRAWINGS SHALL BE HOT-DIP GALVANIZED IN ACCORDANCE WITH ASTM A123.

4. ALL STRUCTURAL STEEL CONNECTIONS NOT SPECIFICALLY DETAILED ON THE PLANS SHALL BE DESIGNED BY THE CONTRACTOR IN ACCORDANCE WITH THE CURRENT EDITION OF THE AISC "MANUAL OF STEEL CONSTRUCTION -ALLOWABLE STRENGTH DESIGN (ASD)". DESIGN FOR ALL CONNECTIONS SHALL BE STAMPED BY A RHODE ISLAND PROFESSIONAL ENGINEER ENGAGED BY THE CONTRACTOR AND SUBMITTED TO THE ARCHITECT/ENGINEER FOR REVIEW PRIOR TO FABRICATION. CONNECTIONS SHALL BE DESIGNED TO DEVELOP (1/2) OF MEMBER'S TOTAL UNIFORM LOAD CAPACITY, TYPICAL UNLESS NOTED OTHERWISE.

5. ALL BOLTED CONNECTIONS SHALL USE 3/4" DIA., A-325-N TYPE I BOLTS, UNLESS NOTED OTHERWISE.

6. ALL NEW STRUCTURAL STEEL SHALL BE GIVEN ONE COAT OF AN APPROVED SHOP PRIMER APPLIED IN ACCORDANCE WITH MANUFACTURER'S RECOMMENDATIONS, UNLESS NOTED OTHERWISE. DO NOT PAINT TOP FLANGES OF BEAMS THAT RECEIVE SHEAR STUDS. SHOP PAINT STEEL AS INDICATED ON THE ARCHITECTURAL DRAWINGS OR PROJECT SPECIFICATIONS. SHOP PAINTING OF STRUCTURAL STEEL SHALL CONFORM TO SSPC-SP2 (INTERIOR SURFACES) OR SSPC-SP6 (EXTERIOR SURFACES).

7. AFTER ERECTION IS COMPLETE, TOUCH-UP ALL SHOP PRIMED COATS DAMAGED DURING TRANSPORT AND ERECTION, AND PRIME ALL FIELD WELDS USING THE SAME PAINT USED FOR SHOP PRIMING.

8. ANY STRUCTURAL STEEL TO RECEIVE SPRAY-ON FIREPROOFING SHALL BE FABRICATED WITHOUT ANY PRIMER OR PAINT COATINGS. COORDINATE WITH THE ARCHITECT REGARDING ADDITIONAL INFORMATION RELATED TO FIREPROOFING.

9. ALL EXPOSED STRUCTURAL STEEL AND CONNECTORS SHALL BE PRIMED AND PAINTED WITH AN APPROVED PAINT SYSTEM. COORDINATE REQUIREMENTS WITH THE ARCHITECT.

10. HIGH STRENGTH BOLTS SHALL BE TORQUED TO 70% OF THE MINIMUM TENSILE STRENGTH OF THE BOLT IN CONFORMANCE WITH AISC SPECIFICATION FOR STRUCTURAL JOINTS USING A-325-N TYPE I BOLTS. PROVIDE ONE HARDENED WASHER UNDER THE ELEMENT TURNED IN TIGHTENING.

11. WELDS SHALL BE MADE ONLY BY OPERATORS CERTIFIED BY THE STANDARD QUALIFICATION PROCEDURE OF THE AMERICAN WELDING SOCIETY. TOUCH UP ALL WELDS WITH THE APPROVED PAINT SYSTEM.

12. WELDING: IN ACCORDANCE WITH LATEST EDITION OF AWS D1.1 CODE FOR WELDING IN BUILDING CONSTRUCTION. USE E70 SERIES ELECTRODES UNLESS NOTED OTHERWISE.

13. FIELD WELDING OF STRUCTURAL MEMBERS IS NOT PERMITTED UNLESS SPECIFICALLY INDICATED.

14. FURNISH AND INSTALL ONE WASHER AND ONE HEAVY HEX NUT WITH ASTM F1554 ANCHOR BOLTS UNLESS OTHERWISE INDICATED.

15. PROVIDE FITTED WELDED 3/8" WEB STIFFENER PLATES ON EACH SIDE OF ALL BEAMS SEATED ON WALLS OR COLUMNS UNLESS NOTED OTHERWISE.

16. FIELD CUTTING OR MODIFICATION OF STRUCTURAL STEEL IS PROHIBITED UNLESS PRIOR WRITTEN APPROVAL IS RECEIVED FROM THE ENGINEER.

17. SURFACES OF GALVANIZED MEMBERS TO BE WELDED SHALL BE GROUND TO BARE METAL PRIOR TO WELDING, AND TOUCHED UP AFTER WELDING IN ACCORDANCE WITH PROJECT SPECIFCIATIONS.

18. MINIMUM FILLET WELD (LEG) SIZE SHALL BE 3/16", UNLESS NOTED OTHERWISE.

19. SHEARED ENDS OF GALVANIZED PRETENSIONED TWIST-OFF SPLINE BOLTS SHALL BE TOUCHED UP WITH A ZINC RICH PRIMER IN ACCORDANCE WITH ASTM A780 AFTER INSTALLATION.

## ABBREVIATIONS

| | | | |
|---|---|---|---|
| ADD'L | ADDITIONAL | LG. | LONG |
| ALT | ALTERNATE | LONG. | LONGITUDINAL |
| A.B. | ANCHOR BOLT | LLV | LONG LEG VERTICAL |
| ARCH | ARCHITECT | L.W. | LONG WAY |
| BOT. | BOTTOM | L.W.C. | LIGHT WEIGHT CONCRETE |
| BEW | BOTTOM EACH WAY | MAX. | MAXIMUM |
| BM | BEAM | MECH | MECHANICAL |
| BOF | BOTTOM OF FOOTING | M.M. | MISCELLANEOUS METAL |
| BRG | BEARING | MIN. | MINIMUM |
| BS | BOTH SIDES | MTL | METAL |
| C | CAMBER | NF | NEAR FACE |
| CFMF | COLD FORMED METAL FRAMING | N-S | NON SHRINK |
| CIP | CAST-IN-PLACE | NTS | NOT TO SCALE |
| CLR | CLEAR | O.C. | ON CENTER |
| COL | COLUMN | PL | PLATE |
| COMP. | DK. COMPOSITE DECK | OPNG | OPENING |
| CONC. | CONCRETE | R & D | REMOVE AND DISPOSE |
| CMU | CONCRETE MASONRY UNIT | REINF. | REINFORCING |
| CJ | CONTROL JOINT | SC | SHEAR CONNECTOR |
| CONST. | JT. CONSTRUCTION JOINT | SLV | SHORT LEG VERTICAL |
| CONT. | CONTINUOUS | SOG | SLAB ON GRADE |
| DIA or Ø | DIAMETER | S.S. | STAINLESS STEEL |
| DWL'S | DOWELS | STIFF | STIFFENER |
| DWG | DRAWING | STL | STEEL |
| EA. | EACH | SJ | SAWN JOINT |
| E.F. | EACH FACE | T | TOP |
| E.W. | EACH WAY | TCX | TOP CHORD EXTENSION |
| EL. | ELEVATION | THK | THICK |
| E.J. | EXPANSION JOINT | TOC | TOP OF CONCRETE |
| EQ. | EQUAL | TOF | TOP OF FOOTING |
| EX.or EXIST. | EXISTING | TOW | TOP OF WALL |
| F.F. | FAR FACE | TRANS. | TRANSVERSE |
| FFE | FINISH FLOOR ELEVATION | TSL | TOP OF SLAB |
| FND | FOUNDATION | TST | TOP OF STEEL |
| FTG | FOOTING | TYP. | TYPICAL |
| GA. | GAUGE | U.N.O. | UNLESS NOTED OTHERWISE |
| GALV. | GALVANIZED | VERT. | VERTICAL |
| G.C. | GENERAL CONTRACTOR | V.I.F. | VERIFY IN FIELD |
| HORIZ. | HORIZONTAL | WWF | WELDED WIRE FABRIC |
| HSS | HOLLOW STRUCTURAL SHAPE | W/ | WITH |
| I.F. | INSIDE FACE | W.P. | WORKING POINT |
| JBE | JOIST BEARING ELEVATION | | |

# JOSLIN RECREATION CENTER - CPF RENOVATION

17 Hyatt St., Providence, RI 2909

Owner:
City of Providence, Dept. of Public Property
25 Dorrance Street
Providence, Rhode Island 02903


ROWSE Architects
400 Massasoit Avenue
Suite 300, Second Floor
East Providence, Rhode Island
p. (401) 331-0200

2 Hampshire Street
Suite 106, First Floor
Foxboro, Massachusetts
p. (774) 215-0290
rowse@rowsearchitects.com



**OWNERSHIP AND USE OF DOCUMENTS, DRAWINGS AND SPECIFICATIONS AS INSTRUMENTS OF PROFESSIONAL SERVICE, ARE, AND SHALL REMAIN, THE PROPERTY OF THE ARCHITECT. THESE DOCUMENTS ARE NOT TO BE USED, IN WHOLE OR IN PART, FOR ANY OTHER PROJECTS OR PURPOSES, OR BY ANY OTHER PARTIES THAN THOSE PROPERLY AUTHORIZED BY CONTRACT WITHOUT THE EXPRESS AUTHORIZATION OF THE ARCHITECT.**


## GENERAL NOTES

1. CONTRACTOR SHALL VISIT SITE, PRIOR TO BID, AND CAREFULLY INVESTIGATE AND EXAMINE THE AREA OF WORK SO AS TO SATISFY HIMSELF AS TO THE NATURE AND LOCATION OF THE WORK. CONTRACTOR TO NOTE THE CHARACTER, QUALITY, QUANTITIES OF MATERIALS REQUIRED AND DIFFICULTIES TO BE ENCOUNTERED. THE KIND AND EXTENT OF EQUIPMENT AND FACILITIES NEEDED FOR PERFORMANCE OF THE WORK AND OTHER ITEMS WHICH MAY, IN ANY WAY, AFFECT THE WORK OR CONTRACTOR'S PERFORMANCE.

2. DRAWINGS DO NOT INCLUDE NECESSARY COMPONENTS FOR CONSTRUCTION SAFETY.

**Date:** 05/05/2025

**Drawn by:** MSS **Proj. Mgr.:** KMC

**Revisions**

| No. | Date | Description |
|---|---|---|
| | | |
| | | |
| | | |
| | | |
| | | |
| | | |
| | | |

STRUCTURAL NOTES

# S0.01

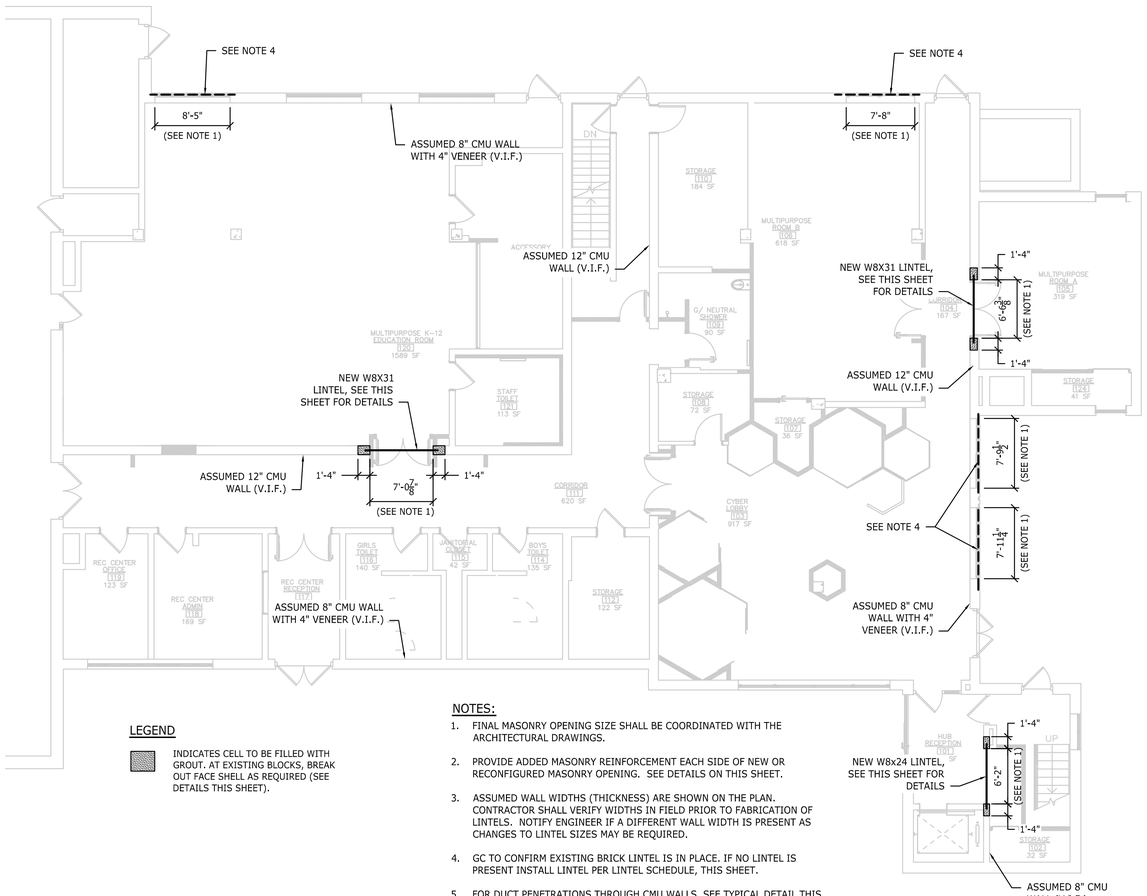


LEGEND

INDICATES CELL TO BE FILLED WITH GROUT. AT EXISTING BLOCKS, BREAK OUT FACE SHELL AS REQUIRED (SEE DETAILS THIS SHEET).

NOTES:

1. FINAL MASONRY OPENING SIZE SHALL BE COORDINATED WITH THE ARCHITECTURAL DRAWINGS.
2. PROVIDE ADDED MASONRY REINFORCEMENT EACH SIDE OF NEW OR RECONFIGURED MASONRY OPENING. SEE DETAILS ON THIS SHEET.
3. ASSUMED WALL WIDTHS (THICKNESS) ARE SHOWN ON THE PLAN. CONTRACTOR SHALL VERIFY WIDTHS IN FIELD PRIOR TO FABRICATION OF LINTELS. NOTIFY ENGINEER IF A DIFFERENT WALL WIDTH IS PRESENT AS CHANGES TO LINTEL SIZES MAY BE REQUIRED.
4. GC TO CONFIRM EXISTING BRICK LINTEL IS IN PLACE. IF NO LINTEL IS PRESENT INSTALL LINTEL PER LINTEL SCHEDULE, THIS SHEET.
5. FOR DUCT PENETRATIONS THROUGH CMU WALLS, SEE TYPICAL DETAIL THIS SHEET. MASONRY REINFORCEMENT IS NOT REQUIRED EACH SIDE OF THE DUCT OPENING IN EXISTING WALLS. REFER TO MECHANICAL DRAWINGS FOR DUCT LOCATIONS AND SIZES.

## SECOND FLOOR FRAMING PLAN

SCALE: 1/8"=1'-0"

## STEEL LINTEL SCHEDULE

| SPAN | LINTEL |
|---|---|
| To 4'-0" | L4X3-1/2X1/4 |
| 4'-1" To 6'-0" | L6X3-1/2X5/16 |
| 6'-1" To 8'-0" | L6X3-1/2X3/8 |
| 8'-1" To 10'-0" | L8X4X1/2 * |

**NOTES:**

1. SINGLE ANGLE SIZE PER EACH 4" WYTHE OF MASONRY UP TO 8". PROVIDE SIZES SHOWN IN TABLE ABOVE FOR OPENINGS UNLESS INDICATED OTHERWISE ON DRAWINGS.
2. * FOR 8" CMU WALLS, CUT THE 4" LEG OF ONE ANGLE TO 3 1/2" TO ALLOW FOR A TIGHT FIT AGAINST THE CMU BLOCK.
3. SPAN LENGTH IS CLEAR OPENING.
4. PROVIDE MIN. 8" BEARING EACH END. FILL CMU CELLS DIRECTLY BELOW LINTEL BEARING SOLID WITH GROUT.
5. LONG LEG SET VERTICAL.
6. ALL EXTERIOR ANGLES SHALL BE HOT-DIP GALVANIZED. PROVIDE 1/4" THICK CLOSURE PLATE (GALV., WELDED TO LINTEL) OVER AIR SPACE AT OPENINGS UNLESS NOTED OR DETAILED OTHERWISE ON ARCHITECTURAL DRAWINGS.
7. LOOSE LINTELS SHALL BE FURNISHED BY METAL FABRICATIONS (M.M.) (SPEC. 05 50 00) AND INSTALLED BY UNIT MASONRY ASSEMBLIES (SPEC. 04 20 00).

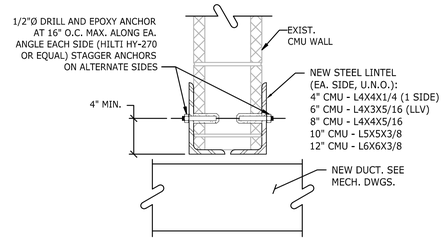


NOTE:
DETAIL APPLICABLE FOR MAX OPENING WIDTH OF 36". FOR WIDER OPENINGS, NOTIFY ENGINEER. FOR OPENING WIDTHS OF 8" OR LESS, NO LINTEL IS REQUIRED.

## TYPICAL WALL OPENING AT DUCT DETAIL

NOT TO SCALE

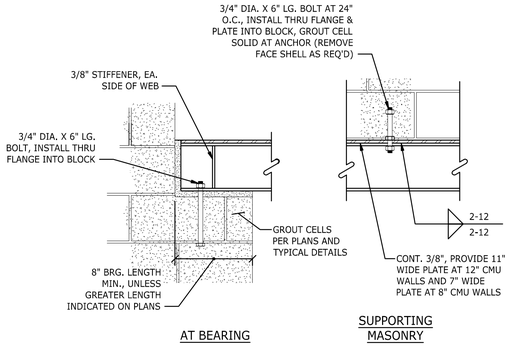


## W-BEAM LINTEL DETAILS

NOT TO SCALE

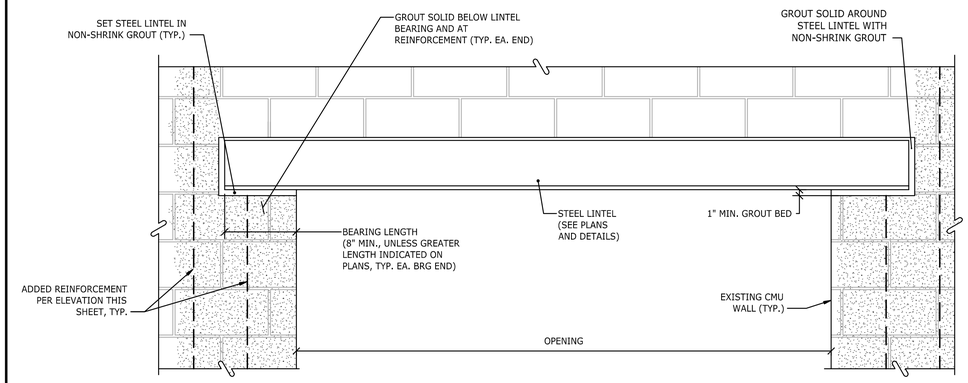


## TYPICAL LINTEL OPENING AT EXISTING CMU WALL

NOT TO SCALE

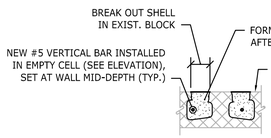


SECTION A-A

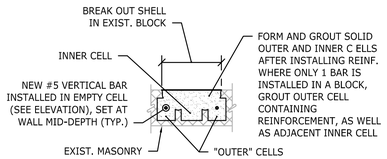


THREE-CELL BLOCK

SECTION A-A (VERIFY BLOCK TYPE IN FIELD)

SUGGESTED SEQUENCE:

1. CONTRACTOR TO DESIGN AND INSTALL TEMPORARY SHORING AS NEEDED TO INSTALL NEW STEEL LINTELS.
2. REMOVE AND/OR CONSTRUCT MASONRY AS REQUIRED AT NEW WALL OPENINGS.
3. INSTALL STEEL REINFORCEMENT AND SOLID GROUT CELLS PER DETAILS.
4. PREPARE GROUT BED FOR STEEL LINTEL.
5. INSTALL LINTEL ON GROUT BED.
6. GROUT SOLID BETWEEN TOP OF LINTEL AND MASONRY ABOVE.

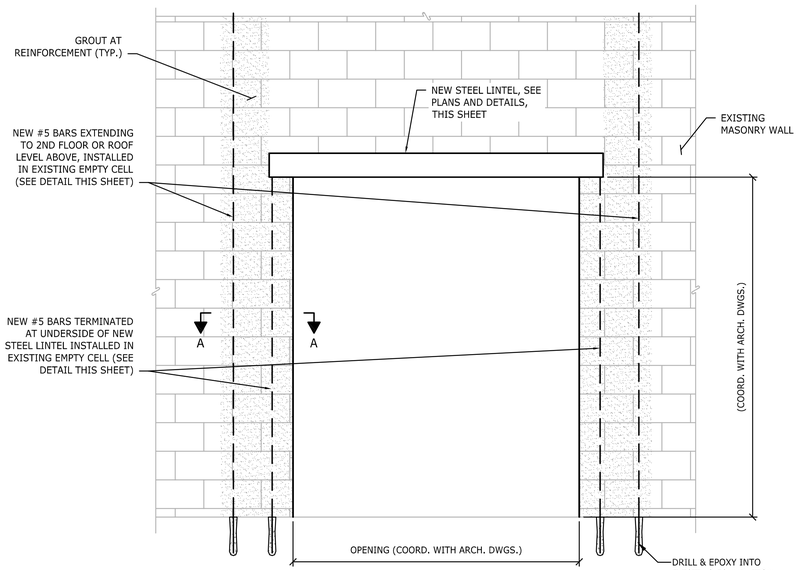


NOTE:
IF REINFORCING BARS ARE NOT INSTALLED IN ONE FULL LENGTH, PROVIDE LAP SPLICES IN ACCORDANCE WITH ACI 530 (MINIMUM 2'-6" LAP LENGTH FOR #5 BAR).

## MASONRY REINFORCEMENT DETAIL

NOT TO SCALE

# JOSLIN RECREATION CENTER - CPF RENOVATION

17 Hyatt St., Providence, RI 2909

Owner:
City of Providence, Dept. of Public Property
25 Dorrance Street
Providence, Rhode Island 02903


Rowse Architects
400 Massasoit Avenue
Suite 300, Second Floor
East Providence, Rhode Island
p. (401) 331-0200

2 Hampshire Street
Suite 106, First Floor
Foxboro, Massachusetts
p. (774) 215-0290

rowse@rowsearchitects.com



OWNERSHIP AND USE OF DOCUMENTS, DRAWINGS AND SPECIFICATIONS AS INSTRUMENTS OF PROFESSIONAL SERVICE, ARE, AND SHALL REMAIN, THE PROPERTY OF THE ARCHITECT. THESE DOCUMENTS ARE NOT TO BE USED, IN WHOLE OR IN PART, FOR ANY OTHER PROJECTS OR PURPOSES, OR BY ANY OTHER PARTIES THAN THOSE PROPERLY AUTHORIZED BY CONTRACT WITHOUT THE EXPRESS AUTHORIZATION OF THE ARCHITECT.


## GENERAL NOTES

1. CONTRACTOR SHALL VISIT SITE, PRIOR TO BID, AND CAREFULLY INVESTIGATE AND EXAMINE THE AREA OF WORK SO AS TO SATISFY HIMSELF AS TO THE NATURE AND LOCATION OF THE WORK. CONTRACTOR TO NOTE THE CHARACTER, QUALITY, QUANTITIES OF MATERIALS REQUIRED AND DIFFICULTIES TO BE ENCOUNTERED. THE KIND AND EXTENT OF EQUIPMENT AND FACILITIES NEEDED FOR PERFORMANCE OF THE WORK AND OTHER ITEMS WHICH MAY, IN ANY WAY, AFFECT THE WORK OR CONTRACTOR'S PERFORMANCE.
2. DRAWINGS DO NOT INCLUDE NECESSARY COMPONENTS FOR CONSTRUCTION SAFETY.

**Date:** 05/05/2025
**Drawn by:** MSS **Proj. Mgr.:** KMC

**Revisions**

| No. | Date | Description |
|---|---|---|
| | | |
| | | |
| | | |
| | | |
| | | |
| | | |

SECOND FLOOR FRAMING PLAN AND DETAILS

# S1.00

S1.00 | 25 of 87

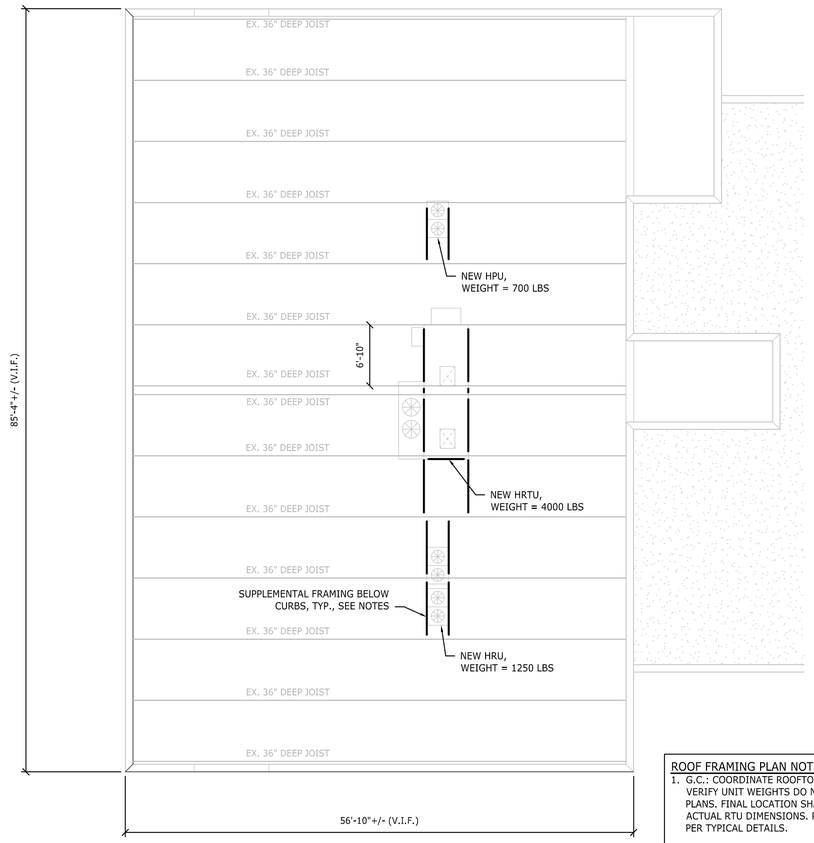


## GYMNASIUM ROOF FRAMING PLAN

NOT TO SCALE

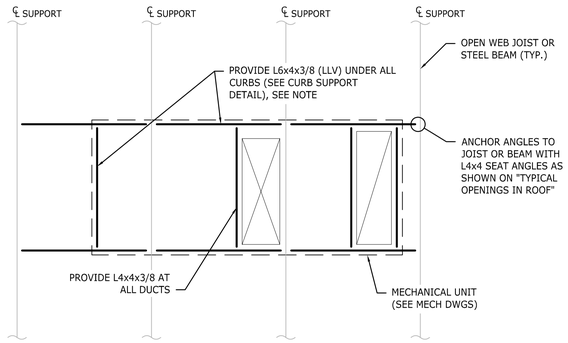


PLAN

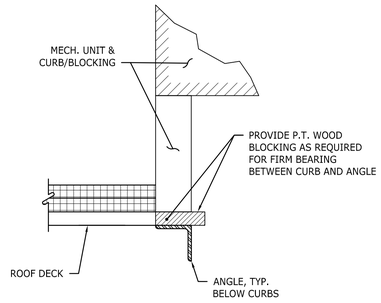


CURB SUPPORT DETAIL

## MECHANICAL UNIT SUPPORT DETAILS

NOT TO SCALE

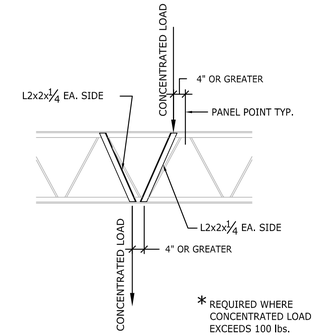


## TYPICAL JOIST PANEL POINT REINFORCEMENT AT CONCENTRATED LOADS

NOT TO SCALE

**ROOF FRAMING PLAN NOTES:**

1. G.C.: COORDINATE ROOFTOP HVAC LOCATIONS AND DIMENSIONS. VERIFY UNIT WEIGHTS DO NOT EXCEED WEIGHTS AS SHOWN ON PLANS. FINAL LOCATION SHALL BE FIELD VERIFIED BASED ON ACTUAL RTU DIMENSIONS. PROVIDE FRAMING BELOW ALL CURBS PER TYPICAL DETAILS.
2. GENERAL CONTRACTOR SHALL COORDINATE LOCATION OF ALL OPENINGS WITH ARCHITECTURAL AND MEP DRAWINGS. FRAME NEW OPENINGS PER TYPICAL DETAILS.
3. REFER TO TYPICAL DETAILS FOR INFILLING OF EXISTING ROOF OPENINGS. REFER TO MECHANICAL AND ARCHITECTURAL DRAWINGS FOR INFILL LOCATIONS AND ADDITIONAL DETAILS.

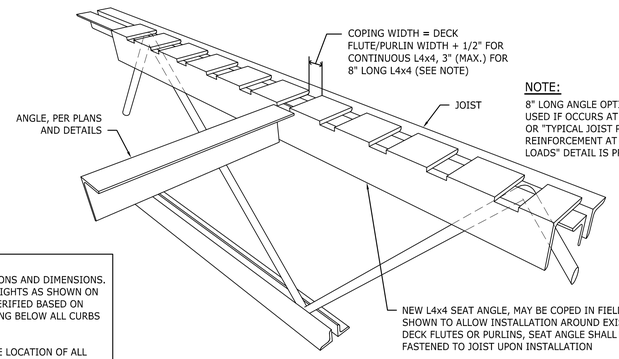


**NOTE:**

8" LONG ANGLE OPTION MAY BE USED IF OCCURS AT PANEL POINT OR "TYPICAL JOIST PANEL POINT REINFORCEMENT AT CONCENTRATED LOADS" DETAIL IS PROVIDED.

## SEAT ANGLE AT JOIST DETAIL

NOT TO SCALE

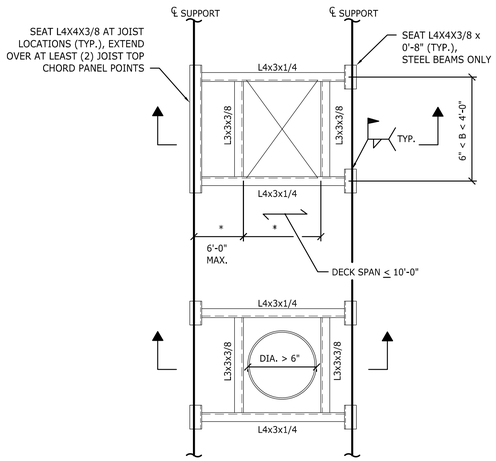


PLAN

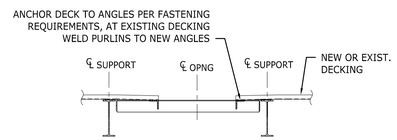


SECTION

* GENERAL CONTRACTOR TO COORDINATE DIMENSIONS

NOTE: REFER TO "SEAT ANGLE DETAIL" THIS SHEET FOR ALLOWABLE COPING AROUND EXISTING DECK FLUTES OR PURLINS.

GENERAL NOTES:

1. OPENINGS OUTSIDE THE LIMITS ABOVE SHALL BE FRAMED WITH STRUCTURAL STEEL. OPENING SIZES AND LOCATIONS TO BE SUBMITTED TO STRUCTURAL ENGINEER.
2. PROVIDE SOLID P.T. BLOCKING AS REQUIRED FOR FIRM BEARING UNDER ALL CURBS FOR ROOFTOP EQUIPMENT, SKYLIGHTS, HATCHES, ETC.

## TYPICAL OPENINGS IN ROOF

NOT TO SCALE

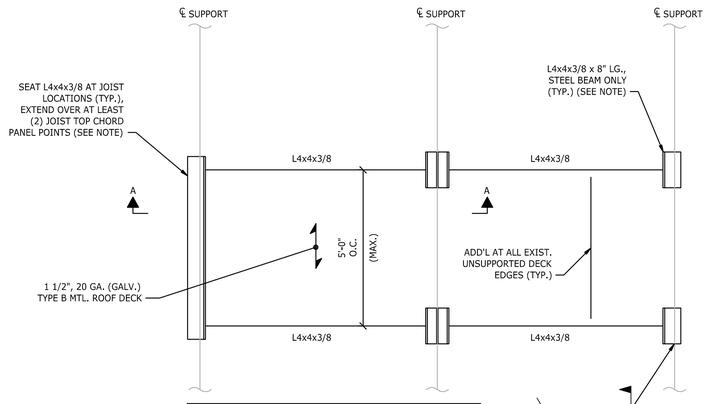


**NOTES:**

1. REFER TO "SEAT ANGLE DETAIL" THIS SHEET FOR ALLOWABLE COPING AROUND EXISTING DECK FLUTES. OR PURLINS
2. NEW DECKING SHALL BE FASTENED TO ALL SUPPORTING FRAMING WITH #12 SELF-TAPPING SCREWS AT 6" O.C. (36/7 PATTERN). PROVIDE #10 TEK SCREWS AT 6" O.C. ALONG ALL SIDE LAPS.

## TYPICAL ACOUSTIC PANEL OR METAL DECK ROOF INFILL DETAIL

NOT TO SCALE

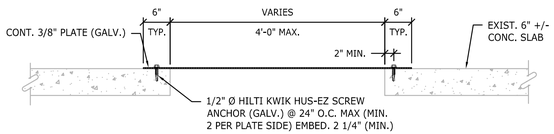


## TYPICAL CONCRETE ROOF INFILL DETAIL

NOT TO SCALE

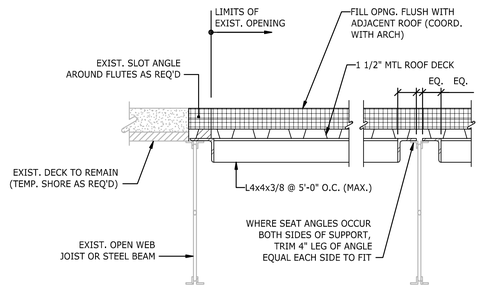


**SECTION A-A**

# JOSLIN RECREATION CENTER - CPF RENOVATION

17 Hyatt St., Providence, RI 2909

Owner:
City of Providence, Dept. of Public Property
25 Dorrance Street
Providence, Rhode Island 02903


Rowse Architects
400 Massasoit Avenue
Suite 300, Second Floor
East Providence, Rhode Island
p. (401) 331-9200

2 Hampshire Street
Suite 106, First Floor
Foxboro, Massachusetts
p. (774) 215-0290
rowse@rowsearchitects.com



**OWNERSHIP AND USE OF DOCUMENTS, DRAWINGS AND SPECIFICATIONS AS INSTRUMENTS OF PROFESSIONAL SERVICE, ARE, AND SHALL REMAIN, THE PROPERTY OF THE ARCHITECT. THESE DOCUMENTS ARE NOT TO BE USED, IN WHOLE OR IN PART, FOR ANY OTHER PROJECTS OR PURPOSES, OR BY ANY OTHER PARTIES THAN THOSE PROPERLY AUTHORIZED BY CONTRACT WITHOUT THE EXPRESS AUTHORIZATION OF THE ARCHITECT.**


## GENERAL NOTES

1. CONTRACTOR SHALL VISIT SITE, PRIOR TO BID, AND CAREFULLY INVESTIGATE AND EXAMINE THE AREA OF WORK SO AS TO SATISFY HIMSELF AS TO THE NATURE AND LOCATION OF THE WORK, CONTRACTOR TO NOTE THE CHARACTER, QUALITY, QUANTITIES OF MATERIALS REQUIRED AND DIFFICULTIES TO BE ENCOUNTERED, THE KIND AND EXTENT OF EQUIPMENT AND FACILITIES NEEDED FOR PERFORMANCE OF THE WORK AND OTHER ITEMS WHICH MAY, IN ANY WAY, AFFECT THE WORK OR CONTRACTOR'S PERFORMANCE.
2. DRAWINGS DO NOT INCLUDE NECESSARY COMPONENTS FOR CONSTRUCTION SAFETY.

**Date:** 05/05/2025
**Drawn by:** MSS **Proj. Mgr.:** KMC

**Revisions**

| No. | Date | Description |
|---|---|---|
| | | |

GYMNASIUM ROOF FRAMING PLAN AND DETAILS

# S1.01

~~####~~ S1.01 | 28 of 87

## DUCTWORK PLAN GENERAL NOTES

1. UOI, DUCTWORK SHALL BE MOUNTED AS HIGH AS POSSIBLE, EXCEPT THAT DUCTWORK HEIGHT SHALL BE ADJUSTED AS NECESSARY FOR THE PROPER INSTALLATION OF EQUIPMENT, PIPING, AND CONDUIT
2. UOI, FLEXIBLE DUCTS ARE ALLOWED ONLY AT CONNECTIONS TO DIFFUSERS AND GRILLES. FLEXIBLE DUCTS SHALL BE A MINIMUM OF 3'-0" AND A MAXIMUM 5'-0" LONG, SHALL BE LOCATED ABOVE ACCESSIBLE CEILINGS ONLY, AND SHALL BE SUSPENDED OFF OF THE CEILING.
3. WHERE BRANCH DUCT SIZES TO DIFFUSERS AND GRILLES ARE NOT INDICATED, SEE THE BRANCH DUCT COLUMN OF THE DIFFUSER AND GRILLE SCHEDULE
4. WHERE VOLUME DAMPERS ARE INACCESSIBLE, PROVIDE WORM GEAR DRIVE AND CABLE ASSEMBLIES SIMILAR TO METROPOLITAN AIR TECHNOLOGIES ROTOTWIST MODEL RT-200/250 SERIES WITH MODEL RT-CCR CEILING CAP. TO THE GREATEST EXTENT POSSIBLE, GROUP CEILING CAPS IN SPACES SUCH AS STORAGE ROOMS, CLOSETS, JANITORS ROOMS, MECHANICAL/ELECTRICAL ROOMS, ETC.
5. DUCTWORK VISIBLE THROUGH THE FACE OF DIFFUSERS, GRILLES, AND LOUVERS SHALL BE PAINTED BLACK
6. EXPOSED ROUND DUCTWORK SHALL BE SPIRAL LOCKSEAM TYPE
7. UOI, ACOUSTICAL LINING SHALL BE 1" THICK
8. DUCTWORK DIMENSIONS INDICATED ARE INSIDE CLEAR DIMENSIONS

## GENERAL MECHANICAL NOTES

1. MECHANICAL EQUIPMENT AND SUCH OTHER APPARATUS AS MAY REQUIRE MAINTENANCE AND OPERATION FROM TIME TO TIME SHALL BE MADE EASILY ACCESSIBLE. ALTHOUGH THE EQUIPMENT MAY BE SHOWN ON THE DRAWINGS IN CERTAIN LOCATIONS, THE CONSTRUCTION MAY DISCLOSE THAT SUCH LOCATIONS DO NOT MAKE ITS POSITION READILY ACCESSIBLE. IN SUCH CASES, THE OWNER OR HIS REPRESENTATIVE SHALL BE NOTIFIED BEFORE ADVANCING THE CONSTRUCTION TO A STAGE WHERE A CHANGE WILL REFLECT ADDITIONAL EXPENSE.
2. THE DRAWINGS SHOW THE LAYOUT OF THE MECHANICAL SYSTEMS AND INDICATE THE APPROXIMATE LOCATIONS OF DUCTWORK, PIPING, BRANCHES AND ELBOWS, AND EQUIPMENT. THE RUNS AND QUANTITY OF DUCTWORK, PIPING, OFFSETS AND ELBOWS AS SHOWN ON THE DRAWINGS ARE DIAGRAMMATIC ONLY. THE EXACT ROUTING OF QUANTITY DUCTWORK, PIPING, OFFSETS AND ELBOWS SHALL BE DETERMINED BY THE STRUCTURAL CONDITIONS, POSSIBLE OBSTRUCTIONS AND COORDINATION DRAWINGS. THIS SHALL NOT BE CONSTRUED TO MEAN THAT THE DESIGN OF THE SYSTEMS MAY BE CHANGED, BUT REFERS ONLY TO EXACT RUNS BETWEEN GIVEN POINTS.
3. IT SHALL BE THE RESPONSIBILITY OF THE HVAC CONTRACTOR TO STUDY ALL DRAWINGS AND DETAILS SO THAT THE INSTALLATION OF ALL NEW WORK CAN BE FULLY COORDINATED. COORDINATE WITH ALL TRADES TO AVOID INTERFERENCE OF EQUIPMENT.
4. HVAC WORK IS INDICATED DIAGRAMMATICALLY. EXACT LOCATION OF ALL COMPONENTS ARE TO BE DETERMINED IN THE FIELD AND BY THE ACTUAL BUILDING CONDITIONS. EQUIPMENT, DUCTS OR PIPES INTERFERING WITH OTHER INSTALLATIONS SHALL BE RELOCATED AS REQUIRED.
5. HVAC CONTRACTOR SHALL COORDINATE ALL WALL, CEILING, FLOOR, ROOF AND BEAM PENETRATIONS WITH ARCHITECT AND STRUCTURAL ENGINEER.
6. PRODUCTS REQUIRED BY CONSTRUCTION BUT NOT SPECIFICALLY DESCRIBED HEREIN SHALL BE AS SELECTED BY THE CONTRACTOR SUBJECT TO THE APPROVAL OF THE A/E.
7. PROVIDE ALL MATERIALS, LABOR, AND ACCESSORIES FOR A COMPLETE AND OPERABLE SYSTEMS AND AS REQUIRED BY THE EQUIPMENT MANUFACTURER'S INSTALLATION INSTRUCTIONS.
8. INSTALL ALL MATERIALS, ACCESSORIES AND EQUIPMENT ACCORDING TO MANUFACTURER'S INSTALLATION INSTRUCTIONS FOR A COMPLETE AND OPERABLE SYSTEMS AS INDICATED ON THE DRAWINGS MANUFACTURERS INSTRUCTIONS.
9. ALL MISCELLANEOUS STRUCTURAL SUPPORTS REQUIRED FOR HVAC EQUIPMENT INSTALLATION SHALL BE PROVIDED BY MECHANICAL CONTRACTOR.
10. INSTALL ALL PIPING BELOW DUCTWORK UNLESS CLEARANCE CONDITION REQUIRES PIPING TO BE ABOVE.
11. WHERE DUCTWORK PENETRATES ANY SMOKE AND/OR FIRE RATED PARTITIONS PROVIDE UL LISTED DYNAMIC FIRE AND/OR SMOKE DAMPERS PER NFPA GUIDELINES. INSTALL DAMPER PER MANUFACTURE INSTRUCTIONS.
12. ALL CEILING MOUNTED EQUIPMENT SHALL BE INSTALLED IN SUCH A WAY THAT LIGHTS, PIPING, AND DUCTWORK DO NOT BLOCK ACCESS TO UNITS AND RELATED ACCESSORIES.
13. EXACT ELEVATION FOR SIDE WALL DIFFUSERS, REGISTERS AND GRILLES SHALL BE APPROVED BY THE ARCHITECT BEFORE INSTALLATION.
14. INSTALL ROOM THERMOSTATS OR SENSORS 54" (MAXIMUM) ABOVE FINISHED FLOOR OR AS OTHERWISE DIRECTED BY THE ARCHITECT. ADA SPACES SHALL BE 48" ABOVE FINISHED FLOOR.

## TAG LEGEND

| | |
|---|---|
| EQUIPMENT (REQUIRING POWER) | EQUIPMENT DESIGNATION<br>NUMBER |
| EQUIPMENT (NON-POWERED) | EQUIPMENT DESIGNATION<br>NUMBER |
| REGISTERS, GRILLES & DIFFUSERS | TYPICAL FOR #<br>DESIGNATION<br>BALANCE TO CFM INDICATED |

## HVAC DEMOLITION GENERAL NOTES

1. ALL DEMOLITION WORK PERFORMED SHALL BE DONE IN ACCORDANCE WITH THE APPLICABLE NATIONAL, STATE AND LOCAL CODES, LAWS AND ORDINANCES.
2. THIS CONTRACTOR SHALL BE RESPONSIBLE FOR PROVIDING AND FILING ALL PLANS, SPECIFICATIONS AND OTHER DOCUMENTS, PAY ALL REQUISITE FEES AND SECURE ALL PERMITS, INSPECTIONS AND APPROVALS NECESSARY FOR THE LEGAL INSTALLATION AND OPERATION OF THE SYSTEM AND/OR EQUIPMENT FURNISHED UNDER THIS SECTION OF THE SPECIFICATIONS.
3. INCLUDE ALL LABOR, MATERIALS, EQUIPMENT, APPLIANCES AND SERVICES NECESSARY TO REMOVE AND DISPOSE OF ALL EXISTING HVAC SYSTEM
4. PRIOR TO SUBMITTING BID, THE CONTRACTOR SHALL VISIT THE PROJECT SITE TO BECOME FAMILIAR WITH ALL EXISTING CONDITIONS AND TO DETERMINE THE EXTENT OF WORK TO REMOVE THE EXISTING HVAC SYSTEM COMPLETELY. IF DISCREPANCIES EXIST BETWEEN DRAWINGS AND/OR SITE CONDITIONS, THE HVAC CONTRACTOR SHALL NOTIFY THE ENGINEER AND THE OWNER PRIOR TO SIGNING OF CONTRACT. REQUESTS FOR COMPENSATION FOR EXTRA WORK, WHICH WOULD HAVE BEEN EVIDENT BY COMPLIANCE WITH THE PREVIOUS STATEMENT, WILL NOT BE CONSIDERED.
5. EQUIPMENT AND DUCTWORK LAYOUTS ON THIS DRAWING ARE DIAGRAMMATIC ONLY AND SHALL NOT BE CONSTRUED AS BEING 100% ACCURATE. WHERE ITEMS ARE SHOWN TO BE DEMOLISHED OR ALTERED ON THESE PLANS THAT ARE NOT REPRESENTED ACCURATELY, THE DEMOLITION SUBCONTRACTOR SHALL ISSUE FORMAL RFI'S AS REQUIRED PRIOR TO COMPLETING THE REQUIRED WORK.
6. REFER TO ARCHITECTURAL DEMOLITION DRAWINGS FOR DEMOLITION WORK. CONTRACTOR SHALL COORDINATE WITH CONSTRUCTION PHASE PRIOR TO REMOVING ANY PIECE OF EQUIPMENT OR PIPING.
7. ALL MAIN AND BRANCH DUCT SIZES INDICATED ARE FOR REFERENCE ONLY AND ARE BASED ON OBSERVATION ONLY, NOT EXACT MEASUREMENT OR SURVEYS.
8. WHERE VOIDS OR OPENINGS IN THE DUCTWORK ARE FOUND AND ARE NOT SPECIFICALLY SHOWN TO BE CAPPED OR PATCHED, IT SHALL BE THE INTENT OF THIS DEMOLITION PLAN THAT CAPPING AND PATCHING IS COMPLETED TO PROVIDE A CLOSED/SEALED SUPPLY AIR SYSTEM TO ACCOMMODATE THE NEW WORK.
9. DEMOLITION OF ALL COMPONENTS SHALL INCLUDE PLACEMENT INTO CONTAINER, REMOVAL FROM SITE AND PROPER DISPOSAL OF, WITH PERMITS AND FEES INCLUDED. REFER TO NEW FLOOR PLANS FOR EXISTING SYSTEMS BEING USED UNDER THE NEW CONSTRUCTION. ALL SYSTEMS FOUND TO BE ABANDONED ARE TO BE REMOVED.
10. COORDINATE ALL SHUT-DOWNS, TIE-INS, ETC., WITH THE G.C. ELECTRICAL MAKE-SAFE OF HVAC EQUIPMENT REQUIRING DEMOLITION SHALL BE COMPLETED BY THE ELECTRICAL SUBCONTRACTOR.
11. DEMOLITION SUBCONTRACTOR MUST PROTECT EXISTING SLAB, WALL, FENCING AND BUILDING STRUCTURE DURING DEMOLITION PHASE. DAMAGE TO EXISTING STRUCTURE SHALL BE REPAIRED AT DEMOLITION SUBCONTRACTORS EXPENSE.
12. PRIOR TO START OF DEMOLITION WORK, THE CONTRACTOR SHALL COORDINATE WITH THE OWNER TO DETERMINE IF ANY EQUIPMENT CALLED TO BE DISPOSED ON THE PLAN SHALL BE RETURNED TO THE OWNER AND STORED PER OWNERS REQUEST.

## ABBREVIATIONS

| ABBREVIATION | DESCRIPTION |
|---|---|
| AD | ACCESS DOOR |
| AFF | ABOVE FINISHED FLOOR |
| AP | ACCESS PANEL |
| AH | AIR HANDLER |
| AHJ | AUTHORITY HAVING JURISDICTION |
| APD | AIR PRESSURE DROP |
| ATC | AUTOMATIC TEMPERATURE CONTROL |
| BHP | BREAK HORSEPOWER |
| BTU | BRITISH THERMAL UNIT |
| BTUH | BTU/HOUR |
| BMS | BUILDING MANAGEMENT SYSTEM |
| CAP | CAPACITY |
| CFM | CUBIC FEET PER MINUTE |
| COP | COEFFICIENT OF PERFORMANCE |
| CU | CONDENSING UNIT |
| CUH | CABINET UNIT HEATER |
| dB | DECIBELS |
| DN | DOWN |
| DX | DIRECT EXPANSION |
| EAT | ENTERING AIR TEMPERATURE (DRY BULB) |
| EBB | ELECTRIC BASEBOARD |
| E.C. | ELECTRICAL CONTRACTOR |
| EDB | ENTERING DRY BULB TEMPERATURE |
| EER | ENERGY EFFICIENCY RATIO |
| EF | EXHAUST FAN |
| EH | ELECTRIC HEATER |
| ESP | EXTERNAL STATIC PRESSURE |
| ET | EXPANSION TANK |
| ETR | EXISTING TO REMAIN |
| EWB | ENTERING WET BULB TEMPERATURE |
| EWT | ENTERING WATER TEMPERATURE |
| °F | DEGREES FAHRENHEIT |
| FD | FIRE DAMPER |
| FN | FURNACE |
| FSD | COMBINATION FIRE/SMOKE DAMPER |
| FT | FEET |
| FT WG | FEET WATER GAUGE |
| FLA | FULL LOAD AMPS |
| FPM | FEET PER MINUTE |
| G.C. | GENERAL CONTRACTOR |
| GPH | GALLONS PER HOUR |
| GPM | GALLONS PER MINUTE |
| HP | HORSEPOWER |
| HSPF | HEATING SEASON PERFORMANCE FACTOR |
| HW | HOT WATER |
| IN | INCHES |
| IPLV | INTEGRATED PART LOAD VALUE |
| IN WG | INCHES WATER GAUGE |
| KW | KILOWATTS |
| L | LOUVER |
| LAT | LEAVING AIR TEMPERATURE |
| LDB | LEAVING DRY BULB |
| LWB | LEAVING WET BULB |
| MAX | MAXIMUM |
| MBH | THOUSANDS OF BTU / HOUR |
| M.C. | MECHANICAL CONTRACTOR |
| MCA | MINIMUM CIRCUIT AMPACITY |
| MIN | MINIMUM |
| MOP | MAXIMUM OVERCURRENT PROTECTION |
| NC | NORMALLY CLOSED |
| NO | NORMALLY OPEN |
| NTS | NOT TO SCALE |
| OA | OUTSIDE AIR |
| OAT | OUTSIDE AIR TEMPERATURE (DRY BULB) |
| ODB | OUTSIDE DRY BULB TEMPERATURE |
| OWB | OUTSIDE WET BULB TEMPERATURE |
| PH | PHASE |
| PRV | PRESSURE REDUCING VALVE |
| PSIG | POUNDS PER SQUARE INCH GAUGE |
| QTY | QUANTITY |
| RPM | REVOLUTIONS PER MINUTE |
| SD | SMOKE DAMPER |
| SEER | SEASONAL ENERGY EFFICIENCY RATIO |
| SF | SUPPLY FAN |
| SP | STATIC PRESSURE |
| SPD | STATIC PRESSURE DROP |
| TSP | TOTAL STATIC PRESSURE |
| TYP | TYPICAL |
| UH | UNIT HEATER |
| VD | VOLUME DAMPER |
| VRF | VARIABLE REFRIGERANT FLOW |

## MECHANICAL LEGEND

| SYMBOL | DESCRIPTION |
|---|---|
| | DUCTWORK (DOUBLE LINE) |
| | DUCTWORK WITH ACOUSTICAL LINING (DOUBLE LINE) |
| | DUCTWORK (SINGLE LINE) |
| | DUCTWORK WITH ACOUSTICAL LINING (SINGLE LINE) |
| | FLEXIBLE DUCTWORK |
| | DUCTWORK, PIPING AND EQUIPMENT TO BE DEMOLISHED |
| | RECTANGULAR/ROUND SUPPLY AIR DUCTWORK UP |
| | RECTANGULAR/ROUND RETURN AIR DUCTWORK UP |
| | RECTANGULAR/ROUND EXHAUST AIR DUCTWORK UP |
| | RECTANGULAR/ROUND SUPPLY AIR DUCTWORK DOWN |
| | RECTANGULAR/ROUND RETURN AIR DUCTWORK DOWN |
| | RECTANGULAR/ROUND EXHAUST AIR DUCTWORK DOWN |
| | VOLUME DAMPER - REMOTE VOLUME DAMPER TYPE ABOVE INACCESSIBLE CEILINGS OR CONSTANT AIRFLOW REGULATORS PER SCHEDULE |
| CFM | BALANCE OUTDOOR AIR TO CFM SHOWN |
| | CONTROL DAMPER |
| | DYNAMIC FIRE DAMPER WITH ACCESS PANEL |
| REF | REFRIGERANT PIPING |
| CON | COOLING COIL CONDENSATE PIPING |
| | ELBOW UP |
| | ELBOW DOWN |
| | TEE DOWN |
| | TEE UP |
| | PIPE GUIDE |
| | PIPE ANCHOR |
| | FLOW DIRECTION |
| | PIPE CLEANOUT |
| | CONNECT TO EXISTING |
| | AIR ENTERING OPENING |
| | AIR LEAVING OPENING |
| CO2 | CO2 SENSOR |
| S | FLAT PLATE SENSOR |
| T | THERMOSTAT OR TEMPERATURE SENSOR |
| T | THERMOSTAT GUARD w/ KEY LOCK |
| | CONTROL CONNECTION |

# JOSLIN RECREATION CENTER - CPF RENOVATION

17 Hyatt St., Providence, RI 2909

Owner:
City of Providence, Dept. of Public Property
25 Dorrance Street
Providence, Rhode Island 02903


Rowse Architects
400 Massasoit Avenue
Suite 300, Second Floor
East Providence, Rhode Island
p. (401) 331-9200

2 Hampshire Street
Suite 106, First Floor
Foxboro, Massachusetts
p. (774) 215-0290
rowse@rowsearchitects.com



OWNERSHIP AND USE OF DOCUMENTS, DRAWINGS AND SPECIFICATIONS AS INSTRUMENTS OF PROFESSIONAL SERVICE, ARE, AND SHALL REMAIN, THE PROPERTY OF THE ARCHITECT. THESE DOCUMENTS ARE NOT TO BE USED, IN WHOLE OR IN PART, FOR ANY OTHER PROJECTS OR PURPOSES, OR BY ANY OTHER PARTIES THAN THOSE PROPERLY AUTHORIZED BY CONTRACT WITHOUT THE EXPRESS AUTHORIZATION OF THE ARCHITECT.



B|E|R
BUILDING ENGINEERING RESOURCES, INC.
66 Main Street
N. Easton, MA 02356
T 508.230.0260
F 508.230.0265
ber@ber-engineering.com

Office Commons 95
351 Centerville Road
Warwick, RI 02886
T 401.384.7682
www.ber-engineering.com


## GENERAL NOTES

1. CONTRACTOR SHALL VISIT SITE, PRIOR TO BID, AND CAREFULLY INVESTIGATE AND EXAMINE THE AREA OF WORK SO AS TO SATISFY HIMSELF AS TO THE NATURE AND LOCATION OF THE WORK, CONTRACTOR TO NOTE THE CHARACTER, QUALITY, QUANTITIES OF MATERIALS REQUIRED AND DIFFICULTIES TO BE ENCOUNTERED. THE KIND AND EXTENT OF EQUIPMENT AND FACILITIES NEEDED FOR PERFORMANCE OF THE WORK AND OTHER ITEMS WHICH MAY, IN ANY WAY, AFFECT THE WORK OR CONTRACTOR'S PERFORMANCE.
2. DRAWINGS DO NOT INCLUDE NECESSARY COMPONENTS FOR CONSTRUCTION SAFETY.

**Date:** 05/05/2025

**Drawn by:** JPK **Proj. Mgr.:** GAA

**Revisions**

| No. | Date | Description |
|---|---|---|
| | | |
| | | |
| | | |
| | | |
| | | |
| | | |
| | | |
| | | |

MECHANICAL
LEGEND, NOTES

# M0.01



BER# 24098

## DEDICATED OUTDOOR AIR UNIT SCHEDULE

| TAG | ENTHALPY RECOVERY EFFICEINCY SUMMER (%) LATENT | SUMMER (%) SENSIBLE | WINTER (%) LATENT | WINTER (%) SENSIBLE | OUTSIDE AIR FAN CFM | OUTSIDE AIR FAN ESP (IN WG) | OUTSIDE AIR FAN # OF FANS | OUTSIDE AIR FAN HP | EXHAUST AIR FAN CFM | EXHAUST AIR FAN ESP (IN WG) | EXHAUST AIR FAN # OF FANS | EXHAUST AIR FAN HP | HEATING PRIMARY HEAT TOTAL MBH | PRIMARY HEAT EAT/LAT (F°) | SECONDARY HEAT CAPACITY (KW) | SECONDARY HEAT EAT/LAT (F°) | CAPACITY CONTROL | COOLING TONS (NOMINAL) | PERFORMANCE EAT (DB/WB) | PERFORMANCE LAT (DB/WB) | MBH TOTAL | MBH SENSIBLE | ELECTRICAL MCA | MOP | VOLTAGE | PHASE | PHYSICAL WEIGHT (LBS) | MANUFACTURER MODEL | REMARKS TYPE | RATINGS | FEATURES | INSTALL |
|---|---|---|---|---|---|---|---|---|---|---|---|---|---|---|---|---|---|---|---|---|---|---|---|---|---|---|---|---|---|---|---|---|
| DOAS-1 | 56.7 | 60.5 | 57.3 | 61.4 | 3,900 | 1.50 | 1 | 5.0 | 3,900 | 1.50 | 1 | 5.0 | 71.3 | 45.3/62.4 | 24.6 | 62.4/82.4 | MODULATING | 12.5 | 81.1/68.6 | 56.4/56.4 | 149.5 | 100.8 | 222.3 | 225.0 | 208 | 3 | 3,636 | GREENHECK RVE-40-41D-12.5A-1-A2 | ① | ① | 1 THRU 28 | ①②③④⑤⑥⑦ |

① DEDICATED OUTDOOR AIR HEAT PUMP UNIT WITH DX COOLING, ELECTRIC HEAT, BOTTOM DISCHARGE, BOTTOM RETURN. R-454B REFRIGERANT

① AHRI CERTIFIED

1 UNIT CONSTRUCTION – DOUBLE WALL
2 INSULATION – 2" 2.4# R-13 FOAM
3 CORROSION RESISTANT FASTENERS
4 HINGED ACCESS
5 FACTORY WIRED NON-FUSED DISCONNECT
6 DIRECT DRIVE PLENUM BLOWER & MOTOR ASSEMBLIES
7 FACTORY WIRED VFD'S
8 UNIT FINISH – PERMATECTOR, COLOR TO BE SELECTED BY OWNER/ARCHITECT
9 STAINLESS STEEL DRAIN PAN & CONNECTION
10 CONDENSATE DRAIN TRAP
11 SHORT CIRCUIT CURRENT – 5 kA
12 ENERGY RECOVERY DEVICE – POLYMER WHEEL W/ SILICA GEL DESICCANT
13 UNIT CONTROLS – FULL CONTROL
14 INTERNALLY MOUNTED CONTROL CENTER WITH 24 VAC CONTROL TRANSFORMER(S)
15 BMS PROTOCOL – BACNET MSTP
16 SUPPLY FAN CONTROL – CONSTANT VOLUME –ADJ SETPOINT
17 EXHAUST FAN CONTROL – CONSTANT VOLUME –ADJ SETPOINT
18 ECONOMIZER CONTROL – TEMPERATURE
19 WEB-BASED USER INTERFACE
20 ENERGY WHEEL ECONOMIZER CONTROL – STOP WHEEL, ENTHALPY
21 ENERGY WHEEL ROTATION SENSOR
22 DAMPER CONTROL – 100% OA–NO RE-CIRCULATION
23 PHASE/BROWNOUT PROTECTION
24 FROST CONTROL – ELECTRIC PRE-HEATER
25 OUTDOOR AIR DAMPER – LOW LEAKAGE
25 CONDENSATE OVERFLOW SWITCH
26 EXHAUST DISCHARGE GRAVITY BACKDRAFT DAMPER
27 MERV 13 FILTERS
28 ROOF CURB – INSULATED VIBRATION ISOLATION ROOF CURB

① INSTALL PER MANUFACTURERS INSTRUCTION
② UNIT SHALL BE PROGRAMMED PER OWNERS REQUIREMENTS AND HOURS OF OPERATION.
③ UNITS SHALL BE INSTALLED ON A VIBRATION ISOLATION ROOF CURB.
④ UNIT SHALL BE CONTROLLED TO MAINTAIN DISCHARGE AIR TEMPERATURE.
⑤ REFER TO DETAIL FOR ACOUSTICAL ATTENUATION AND FURTHER DUCTWORK REQUIREMENTS.
⑥ ELECTRICAL CONTRACTOR SHALL CONNECT UNIT PROVIDED AND MOUNTED SMOKE DETECTOR TO THE FIRE ALARM SYSTEM.
⑦ THE SYSTEM MANUFACTURER SHALL PROVIDE A COMPLETE CONTROLS SYSTEM TO MAINTAIN DISCHARGE AIR TEMPERATURE SET-POINT. TIE NEW DOAS UNIT CONTROLLER TO THE NEW JOHNSON CONTROLS BUILDING MANAGEMENT SYSTEM. PROVIDE ALL SENSORS AND WIRING AS REQUIRED

## HEAT RECOVERY UNIT SCHEDULE

| TAG | SERVES | NOMINAL TONS | NOMINAL COOLING CAPACITY (MBH) | NOMINAL HEATING CAPACITY (MBH) | IEER | COP | MCA MODULE#1/ MODULE#2 | MOP MODULE#1/ MODULE#2 | VOLTAGE | PHASE | MANUFACTURER MODEL | WEIGHT (LBS) | TYPE | RATINGS | FEATURES | INSTALL |
|---|---|---|---|---|---|---|---|---|---|---|---|---|---|---|---|---|
| HPU-1 | ROOF | 12 | 144.0 | 160.0 | 22.2 | 3.68 | 60 | 100 | 208 | 3 | MITSUBISHI PUHY-EP144TNU-A1 | 680.0 | ① | ① | 1 2 3 4 | ①②③④ |
| HRU-1 | ROOF | 16 | 240.0 | 270.0 | 20.0 | 3.46 | 56/56.0 | 60/60.0 | 208 | 3 | MITSUBISHI PURY-EP240TSNU-A1 | 1,244 | ② | ① | 1 2 3 5 | ①②③④ |

① A VARIABLE REFRIGERANT FLOW AIR SOURCE HEAT PUMP SYSTEM,
② A VARIABLE REFRIGERANT FLOW HEAT RECOVERY SYSTEM, CONSISTING OF MULTIPLE MODULES AND REQUIRE INDIVIDUAL ELECTRICAL FEEDS

① RATED PER AHRI

1 REFRIGERANT PIPING LINE-SET FOR EACH INDOOR UNIT.
2 VRF CENTRAL CONTROLLER
3 LOW AMBIENT KIT
4 QUICK SLING STAND.
5 QUICK SLING STAND. PROVIDE WITH EXTENSION MODULE

① PROVIDE SPLIT SYSTEM REFRIGERANT PIPING BETWEEN AIR HANDLER(S) AND MATCHED COMPRESSOR UNIT, SIZED AND CONFIGURED PER THE MANUFACTURER'S RECOMMENDATIONS. ROUTE PIPING CONCEALED TO THE GREATEST EXTENT POSSIBLE.
② PROVIDE POWER AND NETWORK CABLE WITH IP ADDRESS FOR THE CENTRAL CONTROLLER
③ REFER TO DETAIL FOR MOUNTING.
④ THE SYSTEM MANUFACTURER SHALL PROVIDE A COMPLETE CONTROLS SYSTEM TO MAINTAIN SPACE TEMPERATURE SET-POINT. REFER TO EQUIPMENT SCHEDULE FOR A LIST OF EQUIPMENT TO BE INSTALLED AND PROGRAMMED. PROVIDE ALL SENSORS AND WIRING AS REQUIRED. THE CONTRACTOR SHALL INSTALL AND PROGRAM THE SYSTEM PER THE MANUFACTURER'S INSTRUCTIONS. TIE NEW VRF CONTROLLER TO THE NEW JOHNSON CONTROL BUILDING MANAGEMENT SYSTEM.

## ELECTRIC CABINET UNIT HEATER SCHEDULE

| TAG | LOCATION | KW | STAGES | MBH | CFM | FAN SPEED | WATTS | VOLTAGE | PHASE | MANUFACTURER MODEL | TYPE | RATINGS | FEATURES | INSTALL |
|---|---|---|---|---|---|---|---|---|---|---|---|---|---|---|
| CUH-1 | BACK STAIRCASE | 4.0 | 1 | 13.7 | 250 | HIGH | 4,000 | 208 | 3 | QMARK CU935 | ① | ① | 1 2 3 | ①②③ |
| CUH-2 | FRONT STAIRCASE | 4.0 | 1 | 13.7 | 300 | HIGH | 4,000 | 208 | 3 | QMARK CDF548 | ② | ① | 1 2 3 4 | ①②③ |

① SURFACE MOUNTED ELECTRIC CABINET UNIT HEATER (FRONT DISCHARGE, FRONT INLET)
② RECESSED CEILING MOUNTED ELECTRIC CABINET UNIT HEATER (BOTTOM DISCHARGE, BOTTOM INLET)

① UL LISTED

1 WALL MOUNTED WIFI PROGRAMMABLE THERMOSTAT
2 DISCONNECT SWITCH
3 MANUAL RESET THERMAL PROTECTION
4 RECESSED CEILING MOUNTING KIT

① INSTALL PER MANUFACTURES INSTRUCTIONS
② COLOR SHALL BE SELECTED BY ARCHITECT
③ TEMPERATURE CONTROL CONTRACTOR SHALL PROVIDE A FLAT PLATE WALL SENSOR TO CYCLE THE HEAT AND FANS IN ORDER TO MAINTAIN SPACE. TIE SENSOR INTO THE NEW JOHNSON CONTROL BUILDING MANAGEMENT SYSTEM.

## BRANCH CIRCUIT CONTROLLER SCHEDULE

| TAG | MCA | MOP | VOLTAGE | PHASE | MANUFACTURER MODEL | TOTAL # OF PORTS | # OF SPARE PORTS | WEIGHT (LBS) |
|---|---|---|---|---|---|---|---|---|
| BC-1 | 1.6 | 20.0 | 208 | 1 | MITSUBISHI CMB-P1016NU-JA2 | 16 | 4 | 150.0 |

NOTES:
1. SUSPEND UNIT FROM STRUCTURE ABOVE INSTALL PER MANUFACTURERS INSTRUCTIONS.

## DIFFUSER AND GRILLE SCHEDULE

| TAG | SIZE (IN) | BLOW PATTERN | BRANCH DUCT (IN) | MANUFACTURER MODEL | TYPE | FEATURES | INSTALL |
|---|---|---|---|---|---|---|---|
| S4W | SEE PLANS | 4W | SEE PLANS | PRICE AMX | ① | 1 | ①②③④ |
| S3W | SEE PLANS | 3W | SEE PLANS | PRICE AMX | ① | 1 | ①②③④ |
| S2W | SEE PLANS | 2W | SEE PLANS | PRICE AMX | ① | 1 | ①②③④ |
| 2WC | SEE PLANS | 2WC | SEE PLANS | PRICE AMX | ① | 1 | ①②③④ |
| S1W | SEE PLANS | 1W | SEE PLANS | PRICE AMX | ① | 1 | ①②③④ |
| R-1 T-1 E-1 | SEE PLANS | – | SEE PLANS | PRICE 635 | ② | 1 2 | ①②④ |

① HIGH INDUCTION DIRECTIONAL DIFFUSER, SQUARE TO ROUND NECK ADAPTER, ALUMINUM, WHITE FINISH.
② RETURN/EXHAUST/TRANSFER GRILLE, 45° FIXED BLADES ON ¾" CENTERS, BLADES PARALLEL TO LONG DIMENSION, ALUMINUM, WHITE FINISH.

1 REFER TO FLOOR PLANS AND ARCHITECTURAL RCP PLANS FOR MOUNTING TYPE
2 INSULATED PLENUM BOX

① REFER TO ARCHITECTURAL DRAWINGS TO CONFIRM MOUNTING TYPE OF ALL GRILLES AND DIFFUSERS AND FINAL LOCATION PRIOR TO ORDERING
② PROVIDE A DUCT MOUNTED VOLUME DAMPER OR CONSTANT AIRFLOW REGULATOR WHETHER OR NOT A DUCT MOUNTED VOLUME DAMPER IS INDICATED ON PLAN. EXCEPTIONS:
- TRANSFER AIR APPLICATIONS (GRILLE IS NOT CONNECTED BY A DUCTWORK SYSTEM TO A FAN)
- EXHAUST AND RETURN GRILLES WHERE ONLY ONE GRILLE SERVES THE FAN/AIR HANDLING SYSTEM
- GRILLES CONNECTED TO RELIEF AIR HOODS AND RELIEF AIR LOUVERS

③ REFER TO DETAIL
④ DIFFUSERS/GRILLES LOCATED IN ACT CEILINGS SHALL BE NON-BEVELLED SURFACE MOUNT AND CUT INTO THE ACT CEILING TILE FOR SIZES 14x14 AND SMALLER. DIFFUSERS/GRILLES LARGER THAN 14x14 SHALL BE T-BAR LAY-IN

## AIR HANDLING UNIT SCHEDULE CONT.

| TAG | NOMINAL COOLING MBH | NOMINAL HEATING MBH | FAN CFM | FAN ESP (IN WG) | FAN SPEED | MCA | MOP | VOLTAGE | PHASE | MANUFACTURER MODEL | TYPE | RATINGS | FEATURES | INSTALL |
|---|---|---|---|---|---|---|---|---|---|---|---|---|---|---|
| AH-1.0 | 36.0 | 40.0 | 1,095 | – | HIGH | 1.22 | 15.0 | 208 | 1 | MITSUBISHI PCFY-P36NKMU-ER2.TH | ① | ① | 1 2 3 | ①②③④ |
| AH-1.1 | 36.0 | 40.0 | 1,095 | – | HIGH | 1.22 | 15.0 | 208 | 1 | MITSUBISHI PCFY-P36NKMU-ER2.TH | ① | ① | 1 2 3 | ①②③④ |
| AH-1.2 | 36.0 | 40.0 | 1,095 | – | HIGH | 1.22 | 15.0 | 208 | 1 | MITSUBISHI PCFY-P36NKMU-ER2.TH | ① | ① | 1 2 3 | ①②③④ |
| AH-1.3 | 36.0 | 40.0 | 1,095 | – | HIGH | 1.22 | 15.0 | 208 | 1 | MITSUBISHI PCFY-P36NKMU-ER2.TH | ① | ① | 1 2 3 | ①②③④ |
| AH-2.1 | 18.0 | 20.0 | 812 | – | HIGH | 0.54 | 15.0 | 208 | 1 | MITSUBISHI PLFY-EP18NEMU-E1R1 | ③ | ① | 1 2 3 | ①②③④ |
| AH-2.2 | 18.0 | 20.0 | 812 | – | HIGH | 0.54 | 15.0 | 208 | 1 | MITSUBISHI PLFY-EP18NEMU-E1R1 | ③ | ① | 1 2 3 | ①②③④ |
| AH-2.3 | 18.0 | 20.0 | 812 | – | HIGH | 0.54 | 15.0 | 208 | 1 | MITSUBISHI PLFY-EP18NEMU-E1R1 | ③ | ① | 1 2 3 | ①②③④ |
| AH-2.4 | 18.0 | 20.0 | 812 | – | HIGH | 0.54 | 15.0 | 208 | 1 | MITSUBISHI PLFY-EP18NEMU-E1R1 | ③ | ① | 1 2 3 | ①②③④ |
| AH-2.5 | 8.0 | 9.0 | 390 | – | HIGH | 0.28 | 15.0 | 208 | 1 | MITSUBISHI PLFY-P08NFMU-ER1.TH | ② | ① | 1 2 3 | ①②③④ |
| AH-2.6 | 8.0 | 9.0 | 390 | – | HIGH | 0.28 | 15.0 | 208 | 1 | MITSUBISHI PLFY-P08NFMU-ER1.TH | ② | ① | 1 2 3 | ①②③④ |
| AH-2.7 | 8.0 | 9.0 | 390 | – | HIGH | 0.28 | 15.0 | 208 | 1 | MITSUBISHI PLFY-P08NFMU-ER1.TH | ② | ① | 1 2 3 | ①②③④ |
| AH-2.8 | 18.0 | 20.0 | 883 | 0.6 | HIGH | 2.88 | 15.0 | 208 | 1 | MITSUBISHI PEFY-P18NMAU-E5 | ④ | ① | 1 2 3 | ①②③④ |
| AH-2.9 | 48.0 | 54.0 | 1209 | 0.6 | HIGH | 4.38 | 15.0 | 208 | 1 | MITSUBISHI PEFY-P48NMAU-E4 | ④ | ① | 1 2 3 | ①②③④ |
| AH-2.10 | 8.0 | 9.0 | 300 | 0.6 | HIGH | 1.75 | 15.0 | 208 | 1 | MITSUBISHI PEFY-P08NMAU-E4 | ④ | ① | 1 2 3 | ①②③④ |
| AH-2.11 | 15.0 | 17.0 | 390 | – | HIGH | 0.35 | 15.0 | 208 | 1 | MITSUBISHI PLFY-P15NFMU-ER1.TH | ② | ① | 1 2 3 | ①②③④ |
| AH-2.12 | 15.0 | 17.0 | 390 | – | HIGH | 0.35 | 15.0 | 208 | 1 | MITSUBISHI PLFY-P15NFMU-ER1.TH | ② | ① | 1 2 3 | ①②③④ |
| AH-2.13 | 15.0 | 17.0 | 390 | – | HIGH | 0.35 | 15.0 | 208 | 1 | MITSUBISHI PLFY-P15NFMU-ER1.TH | ② | ① | 1 2 3 | ①②③④ |
| AH-2.14 | 15.0 | 17.0 | 600 | – | HIGH | 0.39 | 15.0 | 208 | 1 | MITSUBISHI PLFY-EP15NEMU-ER1 | ③ | ① | 1 2 3 | ①②③④ |
| AH-2.15 | 8.0 | 9.0 | 390 | – | HIGH | 0.28 | 15.0 | 208 | 1 | MITSUBISHI PLFY-P08NFMU-ER1.TH | ② | ① | 1 2 3 | ①②③④ |

① CEILING SUSPENDED AIR HANDLER
② 24"x24" 4-WAY CEILING CASSETTE
③ 33"x33" 4-WAY CEILING CASSETTE
④ MEDIUM STATIC DUCTED UNIT

① RATED PER AHRI

1 CONDENSATE SAFETY SHUTDOWN SWITCH,
2 HARD WIRED, PROGRAMMABLE THERMOSTAT
3 BUILT-IN LIFT MECHANISM

① REFRIGERANT PIPING, CONDENSATE PIPING, CONTROL WIRING AND CONDUIT, POWER WIRING AND CONDUIT, RELAYS, AND OTHER DEVICES SHALL BE CONCEALED; THE ONLY COMPONENT VISIBLE SHALL BE THE AIR HANDLER OR PUMP WHERE INDICATED. LOCATE DEVICES REQUIRING ACCESS IN ACCESSIBLE LOCATIONS; COORDINATE LOCATIONS WITH THE ARCHITECT AND PROVIDE ACCESS PANELS WHERE REQUIRED.
② PROVIDE AND INSTALL CONDENSATE OVERFLOW SWITCH DEVICE AT EACH UNIT CONFORMING TO UL-508 TO SHUT OFF THE UNIT IN THE EVENT THAT THE DRAIN IS BLOCKED.
③ MOUNT INDOOR AIR HANDLING UNIT TO STRUCTURE WITH VIBRATION ISOLATION HANGERS. MAINTAIN MANUFACTURERS CLEARANCES REQUIREMENTS ON ALL SIDES OF AIR HANDLING UNIT.
④ LABEL EACH THERMOSTAT TO MATCH CORRESPONDING INDOOR AIR HANDLING UNIT.

## ELECTRIC UNIT HEATER SCHEDULE

| TAG | LOCATION | KW | STAGES | MBH | CFM | FAN SPEED | AMPS | VOLTAGE | PHASE | MANUFACTURER MODEL | TYPE | RATINGS | FEATURES | INSTALL |
|---|---|---|---|---|---|---|---|---|---|---|---|---|---|---|
| EUH-1 | REC STORAGE 128 | 3.0 | 1 | 10.2 | 350 | HIGH | 14.5 | 208 | 1 | QMARK MUH0381 | ① | ① | 1 2 | ①② |
| EUH-2 | STORAGE 115 | 3.0 | 1 | 10.2 | 350 | HIGH | 14.5 | 208 | 1 | QMARK MUH0381 | ① | ① | 1 2 | ①② |
| EUH-3 | STORAGE 102 | 1.5 | 1 | 5.2 | 100 | HIGH | 12.5 | 120 | 1 | QMARK AWH3150F | ② | ① | 1 2 3 | ①② |
| EUH-4 | CORRIDOR 104 | 1.5 | 1 | 5.2 | 100 | HIGH | 12.5 | 120 | 1 | QMARK AWH3150F | ② | ① | 1 2 3 | ①② |
| EUH-5 | CORRIDOR 104 | 1.5 | 1 | 5.2 | 100 | HIGH | 12.5 | 120 | 1 | QMARK AWH3150F | ② | ① | 1 2 3 | ①② |

① FAN FORCED, COMMERCIAL ELECTRIC UNIT HEATER
② FAN FORCED, WALL MOUNTED, RECESSED ELECTRIC UNIT HEATER

① UL LISTED

1 DISCONNECT SWITCH
2 HANGING BRACKET
3 RECESSED MOUNTING KIT

① INSTALL PER MANUFACTURES INSTRUCTIONS
② TEMPERATURE CONTROL CONTRACTOR SHALL PROVIDE A FLAT PLATE WALL SENSOR TO CYCLE THE HEAT IN ORDER TO MAINTAIN SPACE. TIE SENSOR INTO THE NEW JOHNSON CONTROL BUILDING MANAGEMENT SYSTEM.

# JOSLIN RECREATION CENTER - CPF RENOVATION

17 Hyatt St., Providence, RI 2909

Owner:
City of Providence, Dept. of Public Property
25 Dorrance Street
Providence, Rhode Island 02903


ROWSE Architects
400 Massasoit Avenue
Suite 300, Second Floor
East Providence, Rhode Island
p. (401) 331-9200

2 Hampshire Street
Suite 106, First Floor
Foxboro, Massachusetts
p. (774) 215-0290
rowse@rowsearchitects.com



OWNERSHIP AND USE OF DOCUMENTS, DRAWINGS AND SPECIFICATIONS AS INSTRUMENTS OF PROFESSIONAL SERVICE, ARE, AND SHALL REMAIN, THE PROPERTY OF THE ARCHITECT. THESE DOCUMENTS ARE NOT TO BE USED, IN WHOLE OR IN PART, FOR ANY OTHER PROJECTS OR PURPOSES, OR BY ANY OTHER PARTIES THAN THOSE PROPERLY AUTHORIZED BY CONTRACT WITHOUT THE EXPRESS AUTHORIZATION OF THE ARCHITECT.



BER
BUILDING ENGINEERING RESOURCES, INC.
66 Main Street
N. Easton, MA 02356
T 508.230.0260
F 508.230.0265
ber@ber-engineering.com

Office Commons 95
351 Centerville Road
Warwick, RI 02886
T 401.384.7682
www.ber-engineering.com


### GENERAL NOTES

1. CONTRACTOR SHALL VISIT SITE, PRIOR TO BID, AND CAREFULLY INVESTIGATE AND EXAMINE THE AREA OF WORK SO AS TO SATISFY HIMSELF AS TO THE NATURE AND LOCATION OF THE WORK. CONTRACTOR TO NOTE THE CHARACTER, QUALITY, QUANTITIES OF MATERIALS REQUIRED AND DIFFICULTIES TO BE ENCOUNTERED. THE KIND AND EXTENT OF EQUIPMENT AND FACILITIES NEEDED FOR PERFORMANCE OF THE WORK AND OTHER ITEMS WHICH MAY, IN ANY WAY, AFFECT THE WORK OR CONTRACTOR'S PERFORMANCE.
2. DRAWINGS DO NOT INCLUDE NECESSARY COMPONENTS FOR CONSTRUCTION SAFETY.

**Date:** 05/05/2025
**Drawn by:** JPK **Proj. Mgr.:** CAA

**Revisions**

| No. | Date | Description |
|---|---|---|
| | | |
| | | |
| | | |
| | | |
| | | |
| | | |

MECHANICAL SCHEDULES

# M0.02



REV 24/08

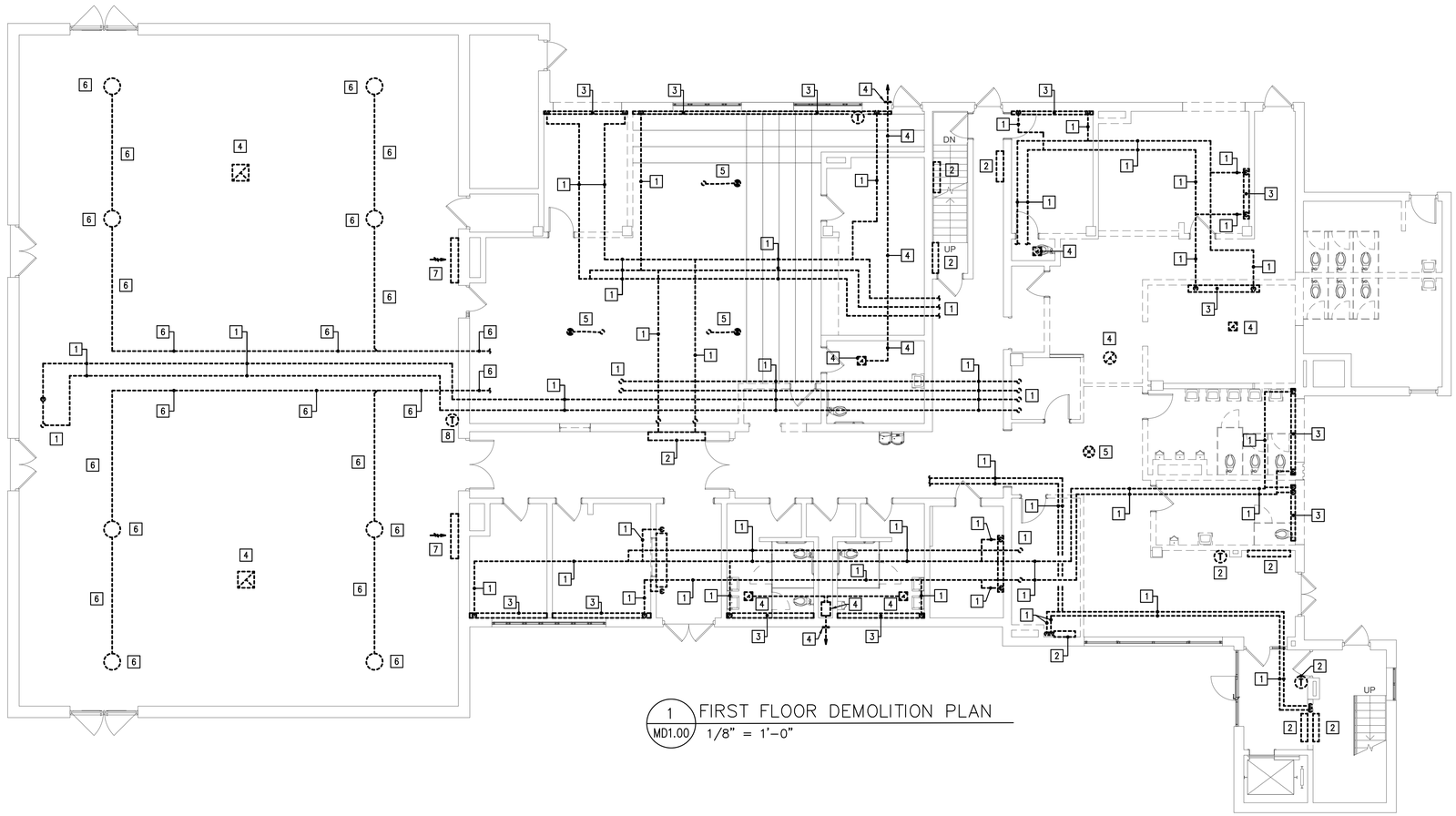


1 MD1.00 FIRST FLOOR DEMOLITION PLAN
1/8" = 1'-0"

| MECHANICAL DEMOLITION PLAN LEGEND | |
|---|---|
| SYMBOL | DESCRIPTION |
| | EXISTING TO BE DEMOLISHED |
| | EXISTING TO REMAIN |
| | EXISTING TO BE RETURNED TO OWNER |
| ETR | EXISTING TO REMAIN |

## MECHANICAL DEMOLITION KEYED NOTES

1. REMOVE AND DISPOSE OF ALL EXISTING HOT WATER SUPPLY/RETURN PIPING, INSULATION HANGERS AND ALL ASSOCIATED APPURTENANCES IN ITS ENTIRETY.
2. REMOVE AND DISPOSE OF EXISTING CABINET UNIT HEATER, ALL HWS/HWR PIPING, THERMOSTAT, CONTROL WIRING, AND ALL ASSOCIATED APPURTENANCES IN ITS ENTIRETY.
3. REMOVE AND DISPOSE OF EXISTING FIN-TUBE RADITION, ALL HWS/HWR PIPING, THERMOSTAT, CONTROL WIRING, AND ALL ASSOCIATED APPURTENANCES IN ITS ENTIRETY.
4. REMOVE AND DISPOSE OF EXISTING EXHAUST GRILLE, ALL EXHAUST DUCTWORK, EXHAUST FANS, CONTROLS, LOUVERS, AND ALL ASSOCIATED APPURTENANCES IN ITS ENTIRETY.
5. REMOVE AND DISPOSE OF EXISTING VENTILATION AIR DIFFUSER, ALL VENTILATION AIR DUCTWORK, VENTILATORS, CONTROLS, AND ALL ASSOCIATED APPURTENANCES IN ITS ENTIRETY.
6. REMOVE AND DISPOSE OF EXISTING SUPPLY AIR DIFFUSER, ALL SUPPLY AIR DUCTWORK, HANGERS, AND ALL ASSOCIATED APPURTENANCES IN ITS ENTIRETY.
7. REMOVE AND DISPOSE OF EXISTING RETURN AIR GRILLE, ALL RETURN AIR DUCTWORK, HANGERS, AND ALL ASSOCIATED APPURTENANCES IN ITS ENTIRETY.
8. REMOVE AND DISPOSE OF EXISTING THERMOSTAT, CONTROL WIRING, AND ALL ASSOCIATED APPURTENANCES IN ITS ENTIRETY.

# JOSLIN RECREATION CENTER - CPF RENOVATION

17 Hyatt St., Providence, RI 2909

Owner:
City of Providence, Dept. of Public Property
25 Dorrance Street
Providence, Rhode Island 02903

ROWSE Architects
400 Massasoit Avenue
Suite 300, Second Floor
East Providence, Rhode Island
p. (401) 331-9200

2 Hampshire Street
Suite 106, First Floor
Foxboro, Massachusetts
p. (774) 215-0290
rowse@rowsearchitects.com

OWNERSHIP AND USE OF DOCUMENTS, DRAWINGS AND SPECIFICATIONS AS INSTRUMENTS OF PROFESSIONAL SERVICE, ARE, AND SHALL REMAIN, THE PROPERTY OF THE ARCHITECT. THESE DOCUMENTS ARE NOT TO BE USED, IN WHOLE OR IN PART, FOR ANY OTHER PROJECTS OR PURPOSES, OR BY ANY OTHER PARTIES THAN THOSE PROPERLY AUTHORIZED BY CONTRACT WITHOUT THE EXPRESS AUTHORIZATION OF THE ARCHITECT.

B|E|R
BUILDING ENGINEERING RESOURCES, INC.
66 Main Street
N. Easton, MA 02356
T 508.230.0260
F 508.230.0265
ber@ber-engineering.com

Office Commons 95
351 Centerville Road
Warwick, RI 02886
T 401.384.7682
www.ber-engineering.com

## GENERAL NOTES

1. CONTRACTOR SHALL VISIT SITE, PRIOR TO BID, AND CAREFULLY INVESTIGATE AND EXAMINE THE AREA OF WORK SO AS TO SATISFY HIMSELF AS TO THE NATURE AND LOCATION OF THE WORK. CONTRACTOR TO NOTE THE CHARACTER, QUALITY, QUANTITIES OF MATERIALS REQUIRED AND DIFFICULTIES TO BE ENCOUNTERED. THE KIND AND EXTENT OF EQUIPMENT AND FACILITIES NEEDED FOR PERFORMANCE OF THE WORK AND OTHER ITEMS WHICH MAY, IN ANY WAY, AFFECT THE WORK OR CONTRACTOR'S PERFORMANCE.
2. DRAWINGS DO NOT INCLUDE NECESSARY COMPONENTS FOR CONSTRUCTION SAFETY.

**Date:** 05/05/2025
**Drawn by:** JPK **Proj. Mgr.:** GAA

**Revisions**

| No. | Date | Description |
|---|---|---|
| | | |
| | | |
| | | |
| | | |
| | | |
| | | |
| | | |

MECHANICAL FIRST FLOOR DEMOLITION PLAN

# MD1.00



BER# 24055

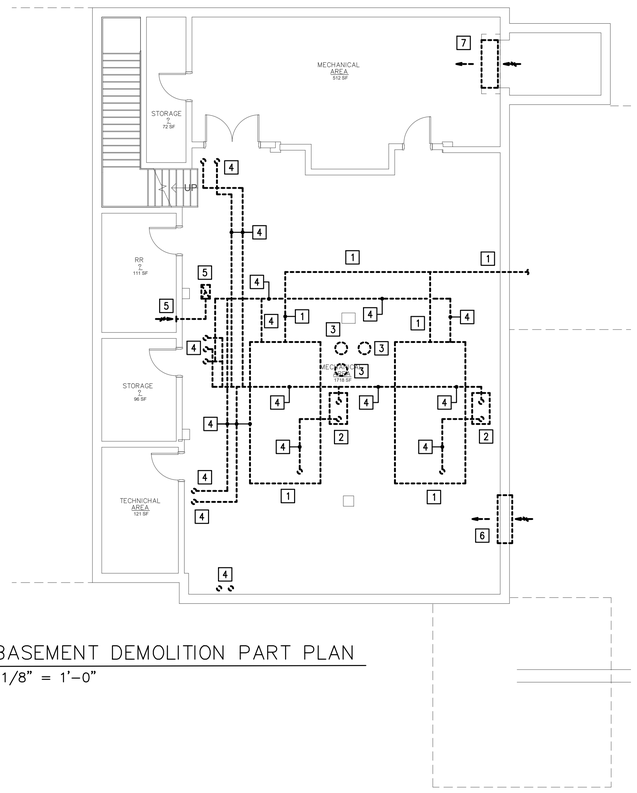


1 MD1.01 BASEMENT DEMOLITION PART PLAN
1/8" = 1'-0"

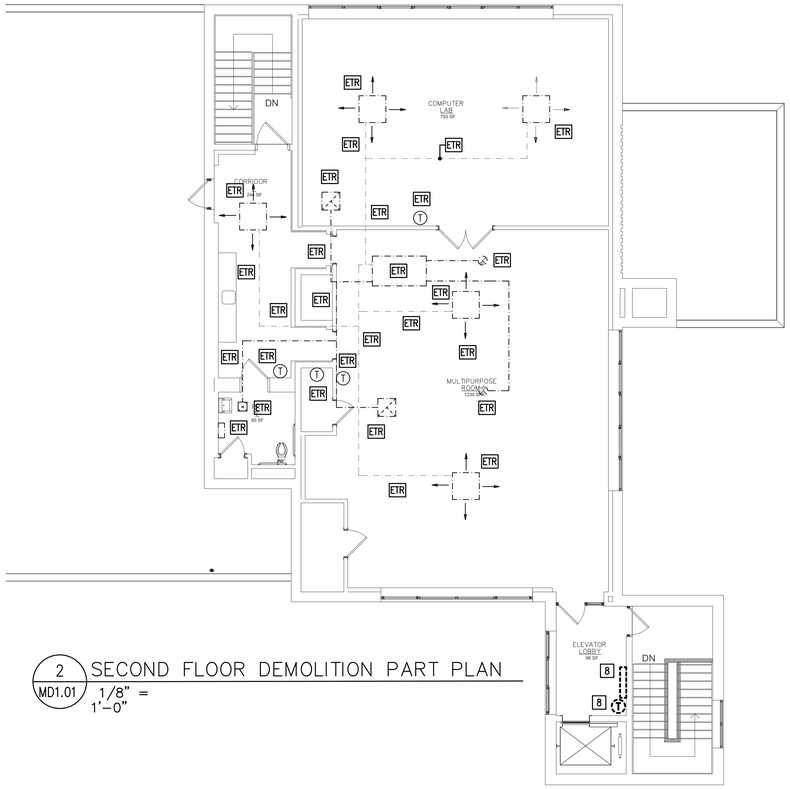


2 MD1.01 SECOND FLOOR DEMOLITION PART PLAN
1/8" = 1'-0"

| MECHANICAL DEMOLITION PLAN LEGEND | |
|---|---|
| SYMBOL | DESCRIPTION |
| | EXISTING TO BE DEMOLISHED |
| | EXISTING TO REMAIN |
| | EXISTING TO BE RETURNED TO OWNER |
| ETR | EXISTING TO REMAIN |

## MECHANICAL DEMOLITION KEYED NOTES

1. REMOVE AND DISPOSE OF EXISTING BOILER, FLUE PIPING, CONTROLS, AND ALL ASSOCIATED APPURTENANCES IN ITS ENTIRETY.
2. REMOVE AND DISPOSE OF EXISTING BASE MOUNTED PUMP, CONTROLS, AND ALL ASSOCIATED APPURTENANCES IN ITS ENTIRETY.
3. REMOVE AND DISPOSE OF EXISTING EXPANSION TANKS, PIPING, AND ALL ASSOCIATED APPURTENANCES IN ITS ENTIRETY.
4. REMOVE AND DISPOSE OF ALL EXISTING HOT WATER SUPPLY/RETURN PIPING, CIRCULATION PUMPS, INSULATION HANGERS AND ALL ASSOCIATED APPURTENANCES IN ITS ENTIRETY.
5. REMOVE AND DISPOSE OF EXISTING EXHAUST FAN, ALL EXHAUST DUCTWORK/GRILLES, CONTROLS, AND ALL ASSOCIATED APPURTENANCES IN ITS ENTIRETY.
6. REMOVE AND DISPOSE OF EXISTING COMBUSTION AIR INTAKE LOUVER, MOTORIZED DAMPER, ACTUATOR, WIRING, CONTROLS, AND ALL ASSOCIATED APPURTENANCES IN ITS ENTIRETY.
7. REMOVE AND DISPOSE OF EXISTING MOTORIZED DAMPER, CONTROLS AND ALL ASSOCIATED APPURTENANCES IN THEIR ENTIRETY. EXISTING LOUVER SHALL REMAIN AS INSTALLED. COVER AND SEAL LOUVER OPENING AIR-TIGHT.
8. REMOVE AND DISPOSE OF CABINET UNIT HEATER, HWS/HWR PIPING, CONTROLS, AND ALL ASSOCIATED APPURTENANCES IN ITS ENTIRETY.

# JOSLIN RECREATION CENTER - CPF RENOVATION

17 Hyatt St., Providence, RI 2909

Owner:
City of Providence, Dept. of Public Property
25 Dorrance Street
Providence, Rhode Island 02903


ROWSE Architects
400 Massasoit Avenue
Suite 300, Second Floor
East Providence, Rhode Island
p. (401) 331-9200

2 Hampshire Street
Suite 106, First Floor
Foxboro, Massachusetts
p. (774) 215-0290
rowse@rowsearchitects.com



**OWNERSHIP AND USE OF DOCUMENTS, DRAWINGS AND SPECIFICATIONS AS INSTRUMENTS OF PROFESSIONAL SERVICE, ARE, AND SHALL REMAIN, THE PROPERTY OF THE ARCHITECT. THESE DOCUMENTS ARE NOT TO BE USED, IN WHOLE OR IN PART, FOR ANY OTHER PROJECTS OR PURPOSES, OR BY ANY OTHER PARTIES THAN THOSE PROPERLY AUTHORIZED BY CONTRACT WITHOUT THE EXPRESS AUTHORIZATION OF THE ARCHITECT.**



B|E|R
BUILDING ENGINEERING RESOURCES, INC.
66 Main Street
N. Easton, MA 02356
T 508.230.0260
F 508.230.0265
ber@ber-engineering.com

Office Commons 95
351 Centerville Road
Warwick, RI 02886
T 401.384.7682
www.ber-engineering.com


## GENERAL NOTES

1. CONTRACTOR SHALL VISIT SITE, PRIOR TO BID, AND CAREFULLY INVESTIGATE AND EXAMINE THE AREA OF WORK SO AS TO SATISFY HIMSELF AS TO THE NATURE AND LOCATION OF THE WORK. CONTRACTOR TO NOTE THE CHARACTER, QUALITY, QUANTITIES OF MATERIALS REQUIRED AND DIFFICULTIES TO BE ENCOUNTERED, THE KIND AND EXTENT OF EQUIPMENT AND FACILITIES NEEDED FOR PERFORMANCE OF THE WORK AND OTHER ITEMS WHICH MAY, IN ANY WAY, AFFECT THE WORK OR CONTRACTOR'S PERFORMANCE.
2. DRAWINGS DO NOT INCLUDE NECESSARY COMPONENTS FOR CONSTRUCTION SAFETY.

**Date:** 05/05/2025
**Drawn by:** JPK **Proj. Mgr.:** GAA

**Revisions**

| No. | Date | Description |
|---|---|---|
| | | |
| | | |
| | | |
| | | |
| | | |
| | | |
| | | |
| | | |

MECHANICAL BASEMENT & SECOND FLOOR DEMOLITION PART PLANS

# MD1.01



BLDG 24/36

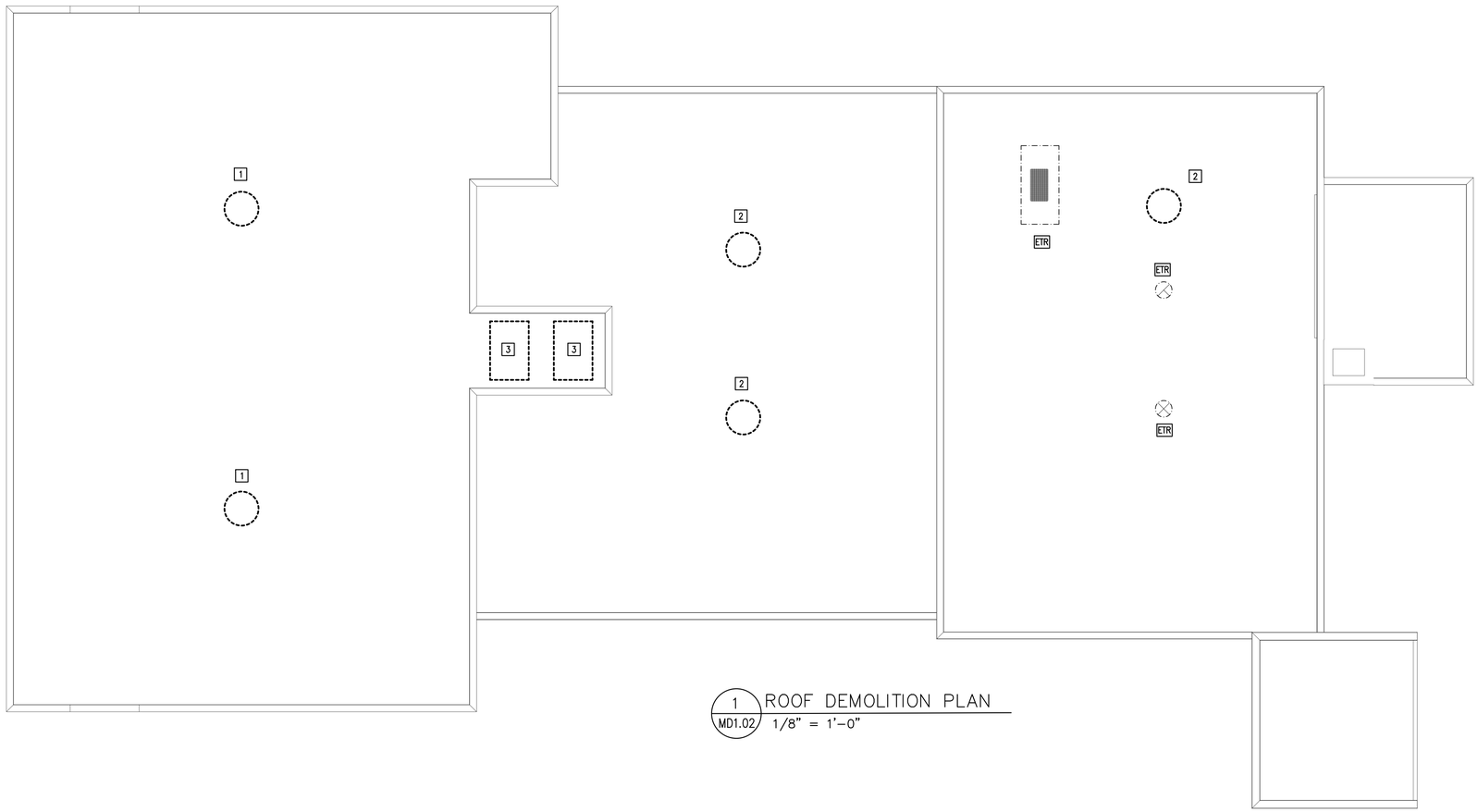


1 MD1.02 ROOF DEMOLITION PLAN
1/8" = 1'-0"

| MECHANICAL DEMOLITION PLAN LEGEND | |
|---|---|
| SYMBOL | DESCRIPTION |
| | EXISTING TO BE DEMOLISHED |
| | EXISTING TO REMAIN |
| | EXISTING TO BE RETURNED TO OWNER |
| ETR | EXISTING TO REMAIN |

## MECHANICAL DEMOLITION KEYED NOTES

1. REMOVE AND DISPOSE OF EXISTING ROOF MOUNTED EXHAUST FAN, ROOF CURB, ALL EXHAUST DUCTWORK, CONTROLS AND ALL ASSOCIATED APPURTENANCES IN ITS ENTIRETY.
2. REMOVE AND DISPOSE OF EXISTING ROOF MOUNTED GRAVITY VENTILATOR, ROOF CURB, ALL DUCTWORK, CONTROLS AND ALL ASSOCIATED APPURTENANCES IN ITS ENTIRETY.
3. REMOVE AND DISPOSE OF EXISTING AIR HANDLER, ALL HWS/HWR PIPING, ALL DUCTWORK, LOUVERS, CONTROLS AND ALL ASSOCIATED APPURTENANCES IN ITS ENTIRETY.

# JOSLIN RECREATION CENTER - CPF RENOVATION

17 Hyatt St., Providence, RI 2909

Owner:
City of Providence, Dept. of Public Property
25 Dorrance Street
Providence, Rhode Island 02903


ROWSE Architects
400 Massasoit Avenue
Suite 300, Second Floor
East Providence, Rhode Island
p. (401) 331-9200

2 Hampshire Street
Suite 106, First Floor
Foxboro, Massachusetts
p. (774) 215-0290
rowse@rowsearchitects.com



**OWNERSHIP AND USE OF DOCUMENTS, DRAWINGS AND SPECIFICATIONS AS INSTRUMENTS OF PROFESSIONAL SERVICE, ARE, AND SHALL REMAIN, THE PROPERTY OF THE ARCHITECT. THESE DOCUMENTS ARE NOT TO BE USED, IN WHOLE OR IN PART, FOR ANY OTHER PROJECTS OR PURPOSES, OR BY ANY OTHER PARTIES THAN THOSE PROPERLY AUTHORIZED BY CONTRACT WITHOUT THE EXPRESS AUTHORIZATION OF THE ARCHITECT.**



B|E|R
BUILDING ENGINEERING RESOURCES, INC.
66 Main Street
N. Easton, MA 02356
T 508.230.0260
F 508.230.0265
ber@ber-engineering.com

Office Commons 95
351 Centerville Road
Warwick, RI 02886
T 401.384.7682
www.ber-engineering.com


## GENERAL NOTES

1. CONTRACTOR SHALL VISIT SITE, PRIOR TO BID, AND CAREFULLY INVESTIGATE AND EXAMINE THE AREA OF WORK SO AS TO SATISFY HIMSELF AS TO THE NATURE AND LOCATION OF THE WORK. CONTRACTOR TO NOTE THE CHARACTER, QUALITY, QUANTITIES OF MATERIALS REQUIRED AND DIFFICULTIES TO BE ENCOUNTERED. THE KIND AND EXTENT OF EQUIPMENT AND FACILITIES NEEDED FOR PERFORMANCE OF THE WORK AND OTHER ITEMS WHICH MAY, IN ANY WAY, AFFECT THE WORK OR CONTRACTOR'S PERFORMANCE.
2. DRAWINGS DO NOT INCLUDE NECESSARY COMPONENTS FOR CONSTRUCTION SAFETY.

**Date:** 05/05/2025
**Drawn by:** JPK **Proj. Mgr.:** GAA

**Revisions**

| No. | Date | Description |
|---|---|---|
| | | |
| | | |
| | | |
| | | |
| | | |
| | | |
| | | |

## MECHANICAL ROOF DEMOLITION PLAN

# MD1.02



BER# 24098

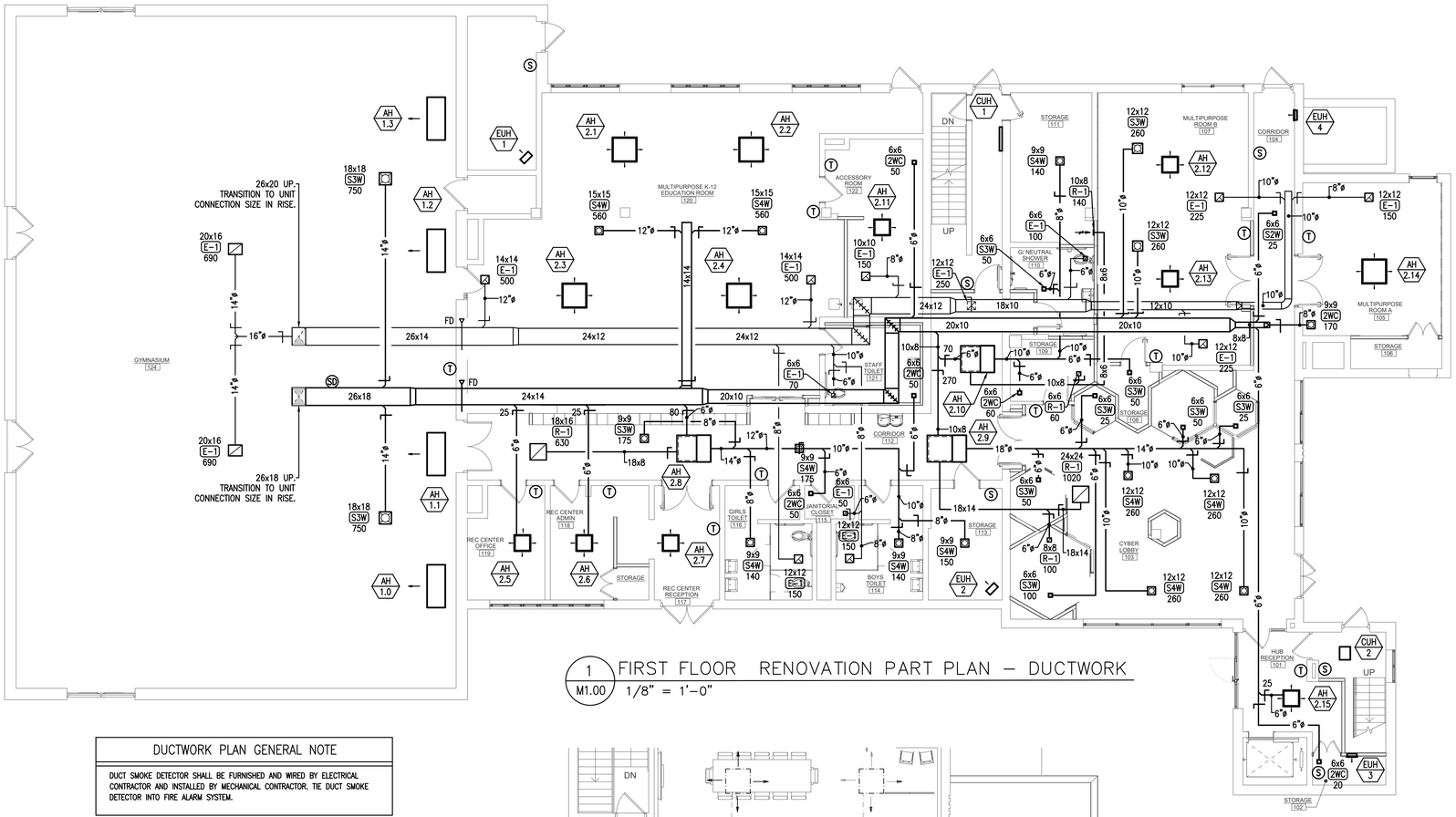


1 M1.00 FIRST FLOOR RENOVATION PART PLAN – DUCTWORK
1/8" = 1'-0"

| DUCTWORK PLAN GENERAL NOTE |
|---|
| DUCT SMOKE DETECTOR SHALL BE FURNISHED AND WIRED BY ELECTRICAL CONTRACTOR AND INSTALLED BY MECHANICAL CONTRACTOR. TIE DUCT SMOKE DETECTOR INTO FIRE ALARM SYSTEM. |

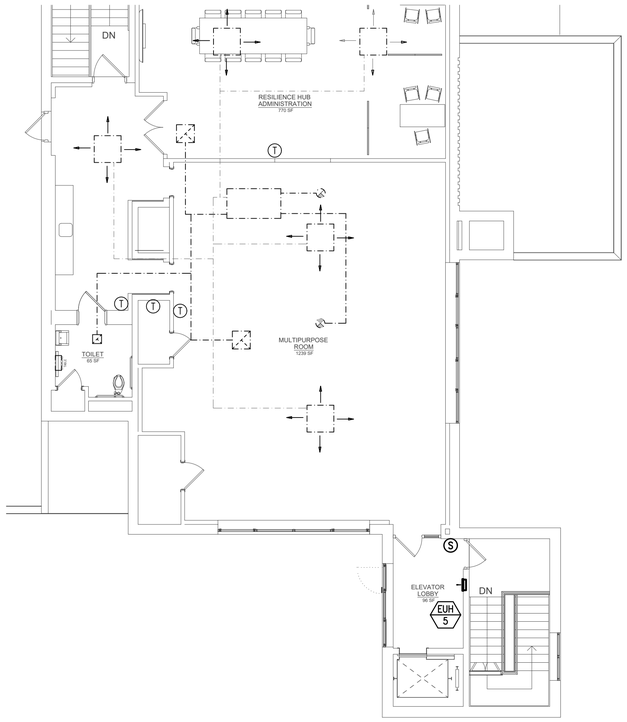


2 M1.00 SECOND FLOOR RENOVATION PART PLAN
1/8" = 1'-0"

# JOSLIN RECREATION CENTER - CPF RENOVATION

17 Hyatt St., Providence, RI 2909

Owner:
City of Providence, Dept. of Public Property
25 Dorrance Street
Providence, Rhode Island 02903


ROWSE Architects
400 Massasoit Avenue
Suite 300, Second Floor
East Providence, Rhode Island
p. (401) 331-9200

2 Hampshire Street
Suite 106, First Floor
Foxboro, Massachusetts
p. (774) 215-0290

rowse@rowsearchitects.com



OWNERSHIP AND USE OF DOCUMENTS, DRAWINGS AND SPECIFICATIONS AS INSTRUMENTS OF PROFESSIONAL SERVICE, ARE, AND SHALL REMAIN, THE PROPERTY OF THE ARCHITECT. THESE DOCUMENTS ARE NOT TO BE USED, IN WHOLE OR IN PART, FOR ANY OTHER PROJECTS OR PURPOSES, OR BY ANY OTHER PARTIES THAN THOSE PROPERLY AUTHORIZED BY CONTRACT WITHOUT THE EXPRESS AUTHORIZATION OF THE ARCHITECT.



BER
BUILDING ENGINEERING RESOURCES, INC.
66 Main Street
N. Easton, MA 02356
T 508.230.0260
F 508.230.0265
ber@ber-engineering.com

Office Commons 95
351 Centerville Road
Warwick, RI 02886
T 401.384.7682
www.ber-engineering.com


## GENERAL NOTES

1. CONTRACTOR SHALL VISIT SITE, PRIOR TO BID, AND CAREFULLY INVESTIGATE AND EXAMINE THE AREA OF WORK SO AS TO SATISFY HIMSELF AS TO THE NATURE AND LOCATION OF THE WORK. CONTRACTOR TO NOTE THE CHARACTER, QUALITY, QUANTITIES OF MATERIALS REQUIRED AND DIFFICULTIES TO BE ENCOUNTERED, THE KIND AND EXTENT OF EQUIPMENT AND FACILITIES NEEDED FOR PERFORMANCE OF THE WORK AND OTHER ITEMS WHICH MAY, IN ANY WAY, AFFECT THE WORK OR CONTRACTOR'S PERFORMANCE.

2. DRAWINGS DO NOT INCLUDE NECESSARY COMPONENTS FOR CONSTRUCTION SAFETY.

**Date:** 05/05/2025
**Drawn by:** JPK **Proj. Mgr.:** GAA

**Revisions**

| No. | Date | Description |
|---|---|---|
| | | |

MECHANICAL FIRST & SECOND FLOOR RENOVATION PART PLANS

# M1.00

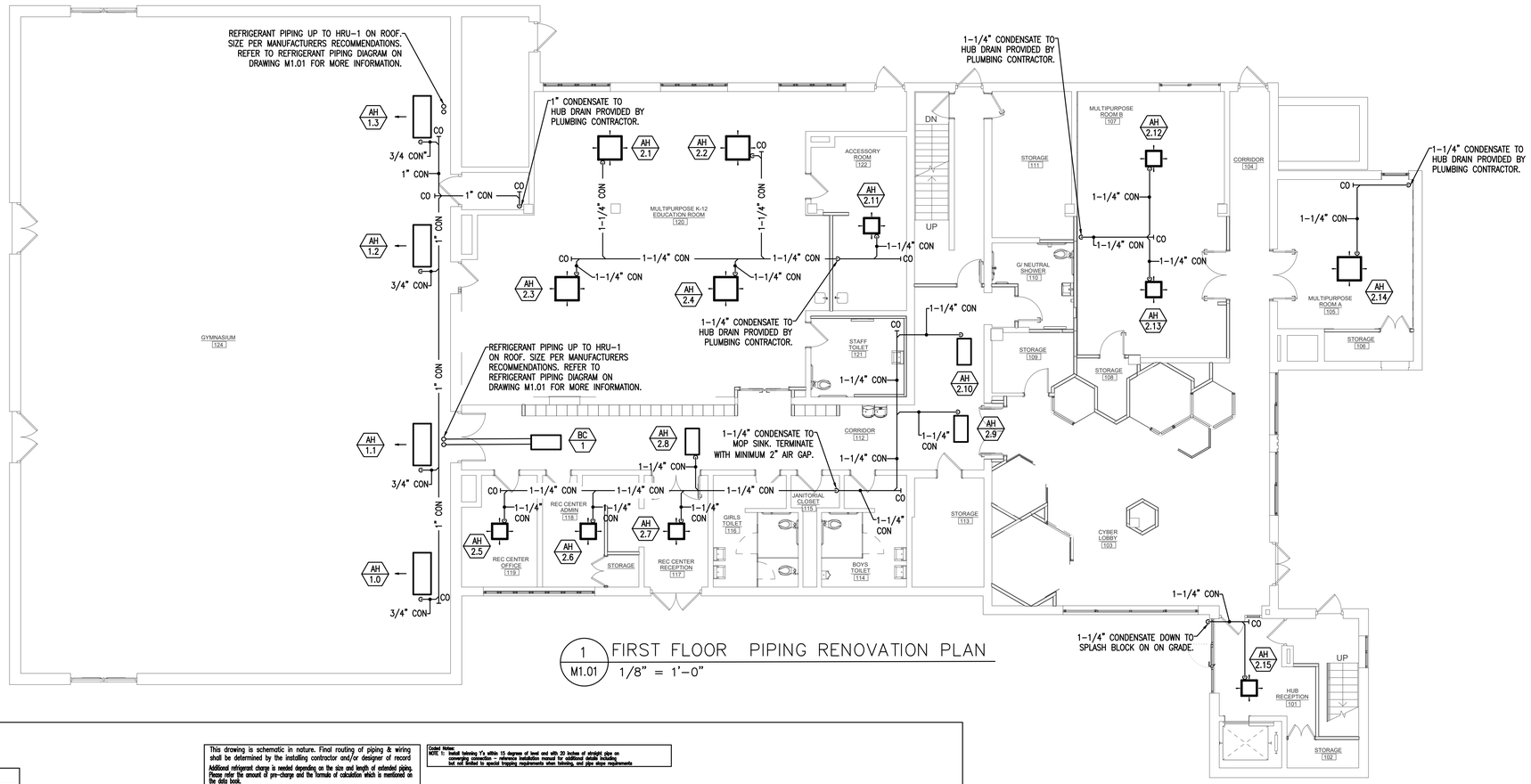


1 / M1.01 FIRST FLOOR PIPING RENOVATION PLAN
1/8" = 1'-0"

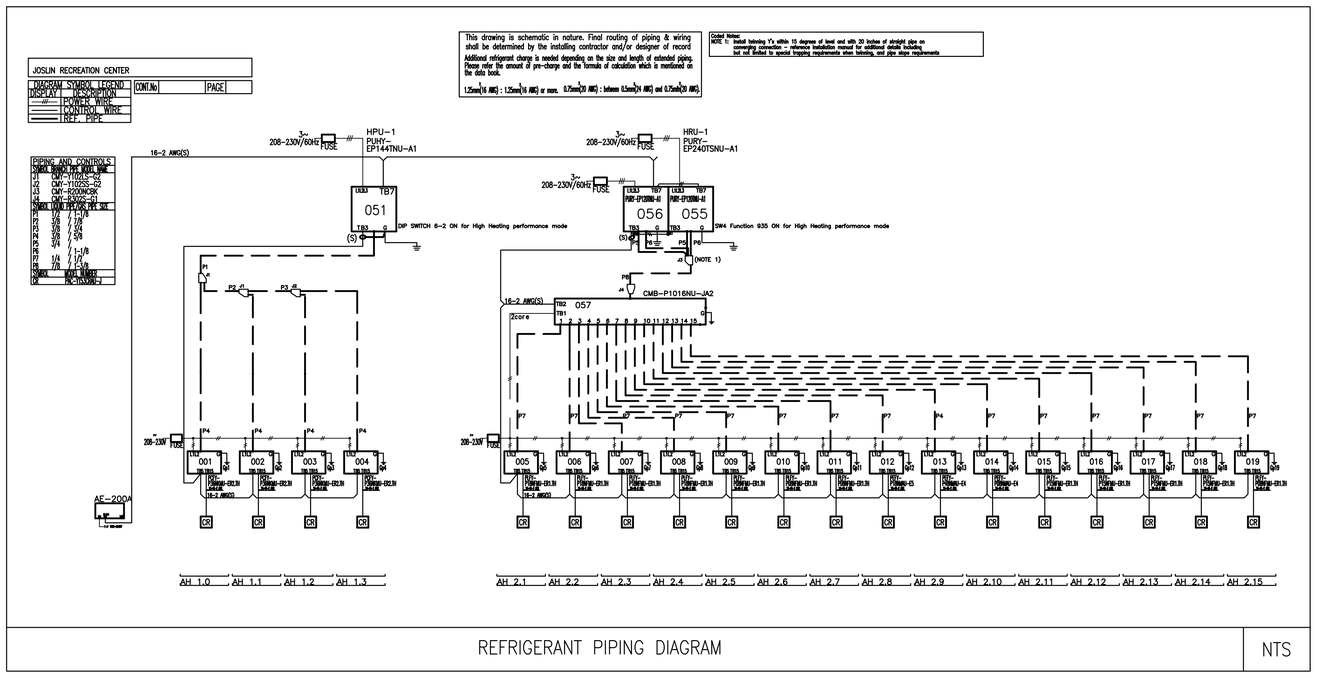


REFRIGERANT PIPING DIAGRAM | NTS

# JOSLIN RECREATION CENTER - CPF RENOVATION

17 Hyatt St., Providence, RI 2909

Owner:
City of Providence, Dept. of Public Property
25 Dorrance Street
Providence, Rhode Island 02903


ROWSE Architects
400 Massasoit Avenue
Suite 300, Second Floor
East Providence, Rhode Island
p. (401) 331-9200

2 Hampshire Street
Suite 106, First Floor
Foxboro, Massachusetts
p. (774) 215-0290
rowse@rowsearchitects.com



OWNERSHIP AND USE OF DOCUMENTS, DRAWINGS AND SPECIFICATIONS AS INSTRUMENTS OF PROFESSIONAL SERVICE, ARE, AND SHALL REMAIN, THE PROPERTY OF THE ARCHITECT. THESE DOCUMENTS ARE NOT TO BE USED, IN WHOLE OR IN PART, FOR ANY OTHER PROJECTS OR PURPOSES, OR BY ANY OTHER PARTIES THAN THOSE PROPERLY AUTHORIZED BY CONTRACT WITHOUT THE EXPRESS AUTHORIZATION OF THE ARCHITECT.



B|E|R
BUILDING ENGINEERING RESOURCES, INC.
66 Main Street
N. Easton, MA 02356
T 508.230.0260
F 508.230.0265
ber@ber-engineering.com

Office Commons 95
351 Centerville Road
Warwick, RI 02886
T 401.384.7682
www.ber-engineering.com


## GENERAL NOTES

1. CONTRACTOR SHALL VISIT SITE, PRIOR TO BID, AND CAREFULLY INVESTIGATE AND EXAMINE THE AREA OF WORK SO AS TO SATISFY HIMSELF AS TO THE NATURE AND LOCATION OF THE WORK. CONTRACTOR TO NOTE THE CHARACTER, QUALITY, QUANTITIES OF MATERIALS REQUIRED AND DIFFICULTIES TO BE ENCOUNTERED. THE KIND AND EXTENT OF EQUIPMENT AND FACILITIES NEEDED FOR PERFORMANCE OF THE WORK AND OTHER ITEMS WHICH MAY, IN ANY WAY, AFFECT THE WORK OR CONTRACTOR'S PERFORMANCE.

2. DRAWINGS DO NOT INCLUDE NECESSARY COMPONENTS FOR CONSTRUCTION SAFETY.

**Date:** 05/05/2025
**Drawn by:** JPK **Proj. Mgr.:** GAA

**Revisions**

| No. | Date | Description |
|---|---|---|
| | | |
| | | |
| | | |
| | | |
| | | |
| | | |
| | | |
| | | |

MECHANICAL
FIRST FLOOR PIPING PLAN

# M1.01

##### - M1.01 | 33 of 87

BLKF 24/36

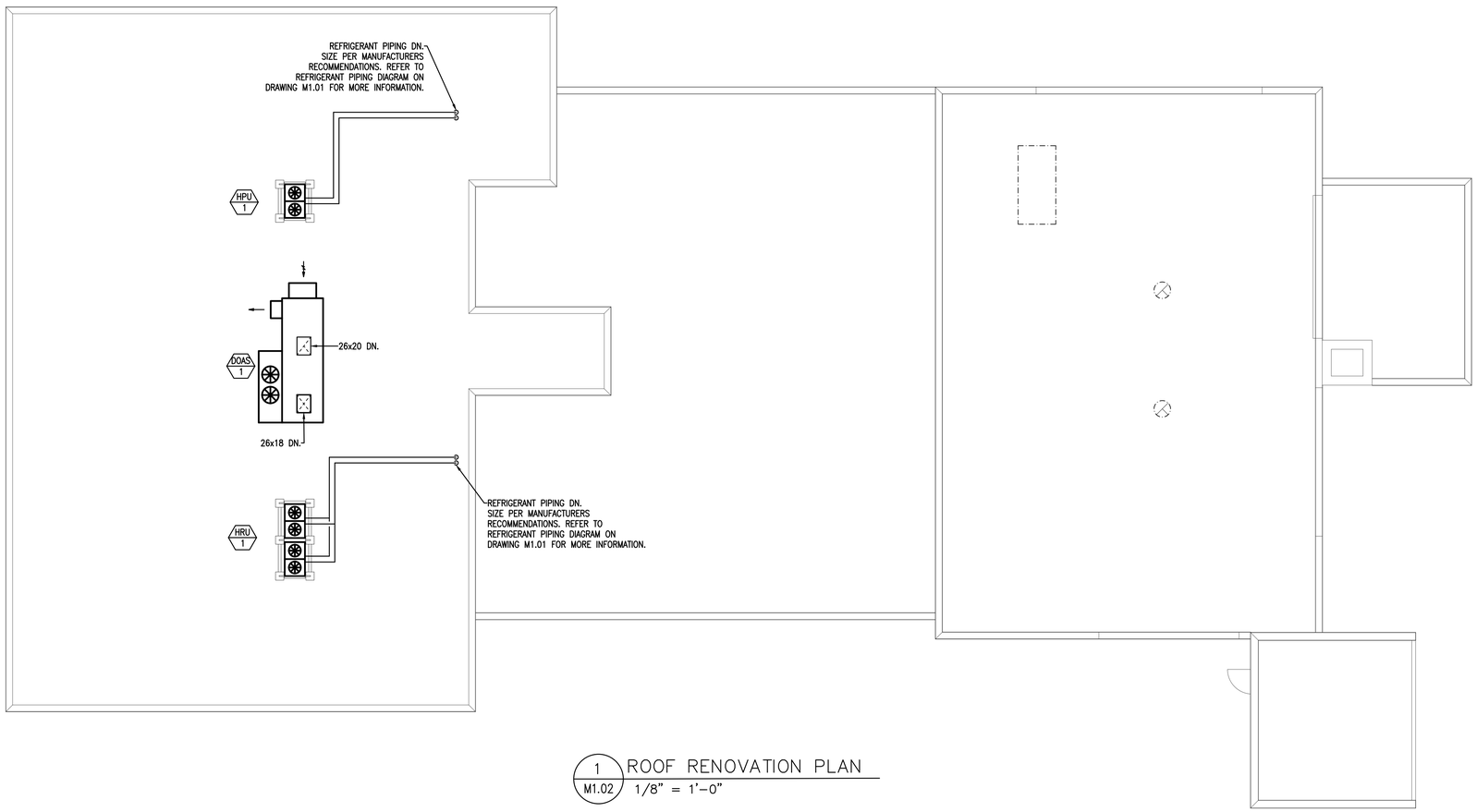


1 / M1.02 ROOF RENOVATION PLAN
1/8" = 1'-0"

# JOSLIN RECREATION CENTER - CPF RENOVATION

17 Hyatt St., Providence, RI 2909

Owner:
City of Providence, Dept. of Public Property
25 Dorrance Street
Providence, Rhode Island 02903

ROWSE Architects
400 Massasoit Avenue
Suite 300, Second Floor
East Providence, Rhode Island
p. (401) 331-9200

2 Hampshire Street
Suite 106, First Floor
Foxboro, Massachusetts
p. (774) 215-0290

rowse@rowsearchitects.com

OWNERSHIP AND USE OF DOCUMENTS, DRAWINGS AND SPECIFICATIONS AS INSTRUMENTS OF PROFESSIONAL SERVICE, ARE, AND SHALL REMAIN, THE PROPERTY OF THE ARCHITECT. THESE DOCUMENTS ARE NOT TO BE USED, IN WHOLE OR IN PART, FOR ANY OTHER PROJECTS OR PURPOSES, OR BY ANY OTHER PARTIES THAN THOSE PROPERLY AUTHORIZED BY CONTRACT WITHOUT THE EXPRESS AUTHORIZATION OF THE ARCHITECT.

B|E|R
BUILDING ENGINEERING RESOURCES, INC.
66 Main Street
N. Easton, MA 02356
T 508.230.0260
F 508.230.0265
ber@ber-engineering.com

Office Commons 95
351 Centerville Road
Warwick, RI 02886
T 401.384.7682
www.ber-engineering.com

## GENERAL NOTES

1. CONTRACTOR SHALL VISIT SITE, PRIOR TO BID, AND CAREFULLY INVESTIGATE AND EXAMINE THE AREA OF WORK SO AS TO SATISFY HIMSELF AS TO THE NATURE AND LOCATION OF THE WORK. CONTRACTOR TO NOTE THE CHARACTER, QUALITY, QUANTITIES OF MATERIALS REQUIRED AND DIFFICULTIES TO BE ENCOUNTERED, THE KIND AND EXTENT OF EQUIPMENT AND FACILITIES NEEDED FOR PERFORMANCE OF THE WORK AND OTHER ITEMS WHICH MAY, IN ANY WAY, AFFECT THE WORK OR CONTRACTOR'S PERFORMANCE.

2. DRAWINGS DO NOT INCLUDE NECESSARY COMPONENTS FOR CONSTRUCTION SAFETY.

**Date:** 05/05/2025
**Drawn by:** JPK **Proj. Mgr.:** GAA

**Revisions**

| No. | Date | Description |
|---|---|---|
| | | |

MECHANICAL RENOVATION ROOF PLAN

# M1.02



BER# 24095

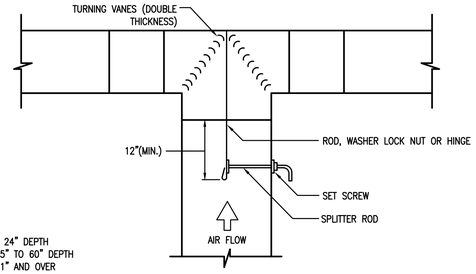


NOTES:
1. ROD TO 24" DEPTH
2. RODS 25" TO 60" DEPTH
3. RODS 61" AND OVER

SUPPLY DUCT T-BRANCH DETAIL | NTS

| DUCT SIZE | HOLE SIZE | MINIMUM DUCT HEIGHT |
|---|---|---|
| 6"x4" | 7.5"x5.5" | 7.5" |
| 10"x4" | 11.5"x5.5" | 7.5" |
| 16"x4" | 17.5"x5.5" | 7.5" |
| 24"x4" | 25.5"x5.5" | 7.5" |
| 6"x5" | 7.5"x6.5" | 8.5" |
| 10"x5" | 11.5"x6.5" | 8.5" |
| 16"x5" | 17.5"x6.5" | 8.5" |
| 24"x5" | 25.5"x6.5" | 8.5" |
| 6"x6" | 7.5"x7.5" | 9.5" |
| 10"x6" | 11.5"x7.5" | 9.5" |
| 16"x6" | 17.5"x7.5" | 9.5" |
| 24"x6" | 25.5"x7.5" | 9.5" |
| 8"x8" | 9.5"x9.5" | 11.5" |
| 16"x8" | 17.5"x9.5" | 11.5" |
| 24"x8" | 25.5"x9.5" | 11.5" |
| 10"x10" | 11.5"x11.5" | 13.5" |
| 16"x10" | 17.5"x11.5" | 13.5" |
| 24"x10" | 25.5"x11.5" | 13.5" |

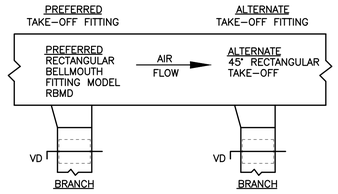


NOTES:
1. ALL ROUND AND RECTANGULAR BELLMOUTH FITTINGS SHALL BE INCLUDED WITH THE FOLLOWING STANDARD FEATURES:
   A. NEOPRENE GASKET TO MINIMIZE AIR LEAKAGE.
   B. PRE-DRILLED HOLES FOR QUICK MOUNTING.
   C. CONTSTRUCTED OF HEAVY DUTY GALVANIZED STEEL.
2. OPTIONAL FEATURES SHALL INCLUDE THE FOLLOWING:
   A. 26 GAUGE GALVANIZED QUANDRANT VOLUME DAMPER WITH TIGHT FITTING GASKETING TO MINIMIZE LEAKAGE AT DAMPER PIVOT POINTS.
   B. HEAVY DUTY HARDWARE IS AVAILABLE FOR APPLICATIONS WITH INCREASED STATIC PRESSURE.

RECTANGULAR BRANCH DUCT TAKE-OFF DETAIL | NTS

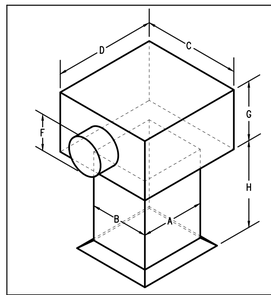


NECK = A X B
C= B+2" (MIN)
D= A+2" (MIN)
G= F+2" (MIN)
H= 6" (MIN)
F= ROUND CONNECT SIZE OR DEPTH OF AN EQUIVALENT OVAL HAVING THE SAME CIRCUMFERENCE AS THE ROUND

NOTES:
1. PROVIDE A MINIMUM 3'-0" AND A MAXIMUM 5'-0" OF FLEX DUCT AT EACH CEILING MOUNTED GRILLE/DIFFUSER.

SPQUARE DIFFUSER CONNECTION BOOT DETAIL | NTS

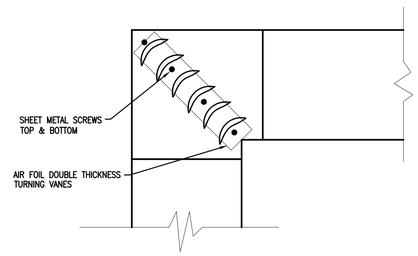


TYPICAL 90° ELBOW DETAIL | NTS

NOTE: ALTERNATE FITTINGS TO BE USED WHEN DUCT HEIGHT DOES NOT PERMIT THE USE OF THE FULL SIZE, PREFERRED BELLMOUTH

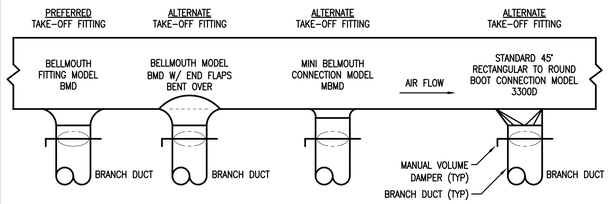


| DUCT SIZE | HOLE SIZE | MINIMUM DUCT HEIGHT |
|---|---|---|
| 5" | 8" | 9" |
| 6" | 9" | 10" |
| 7" | 10" | 11" |
| 8" | 11" | 12" |
| 9" | 12" | 13" |
| 10" | 13" | 14" |
| 12" | 15" | 16" |
| 14" | 17" | 18" |
| 16" | 19" | 20" |

| DUCT SIZE | HOLE SIZE | MINIMUM DUCT HEIGHT |
|---|---|---|
| 5" | – | – |
| 6" | 7" | 9" |
| 7" | – | – |
| 8" | 9" | 11" |
| 9" | – | – |
| 10" | 11" | 13" |
| 12" | – | – |
| 14" | – | – |
| 16" | – | – |

| DUCT SIZE | HOLE SIZE | MINIMUM DUCT HEIGHT |
|---|---|---|
| 5" | 5"x10" | 7" |
| 6" | 6"x12" | 8" |
| 7" | 6"x12" | 8" |
| 8" | 6.5"x12" | 8.5" |
| 9" | 6.5"x14" | 8.5" |
| 10" | 6.5"x16" | 8.5" |
| 12" | 8.5"x18" | 12" |
| 14" | 10"x20" | 10.5" |
| 16" | – | – |

ROUND BRANCH DUCT TAKE-OFF DETAIL | NTS

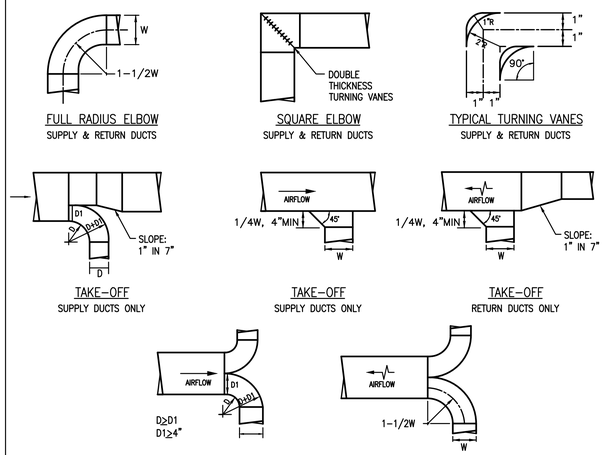


TYPICAL DUCT ELBOWS AND TAKE-OFFS DETAIL | NTS

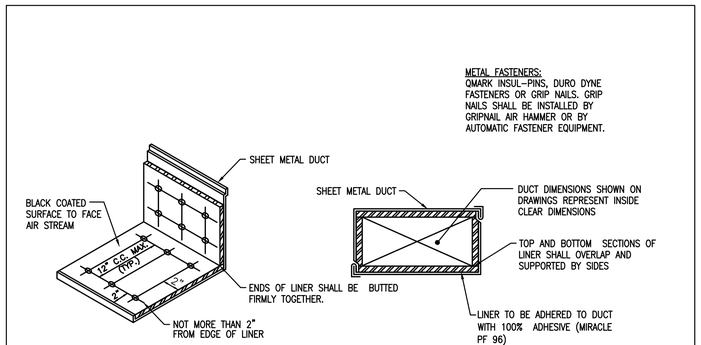


DUCT LINER DETAIL | NTS

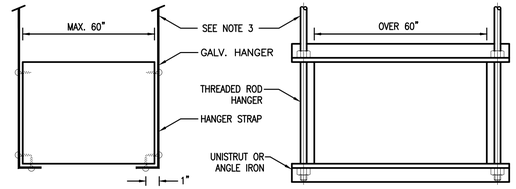


NOTES:
1. ON DUCTS OVER 48" WIDE, BOTTOM SHALL BE BRACED BY ANGLE. FOR CROSS SECTION AREA MORE THAN 8 SQ. FT., DUCT SHALL BE BRACED BY ANGLES ON ALL FOUR SIDES.
2. CUTTING AND PATCHING SHALL BE LIMITED TO A MINIMUM AS REQUIRED FOR PROPER INSTALLATION.
3. SUPPORTS SHALL BE SPACED AND SIZED PER SMACNA STANDARDS.

DUCT HANGER/SUPPORT DETAIL | NTS

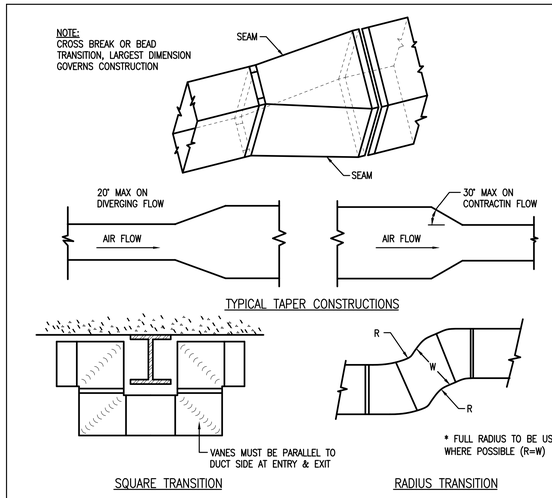


DUCT TRANSITION & OFFSET DETAIL | NTS

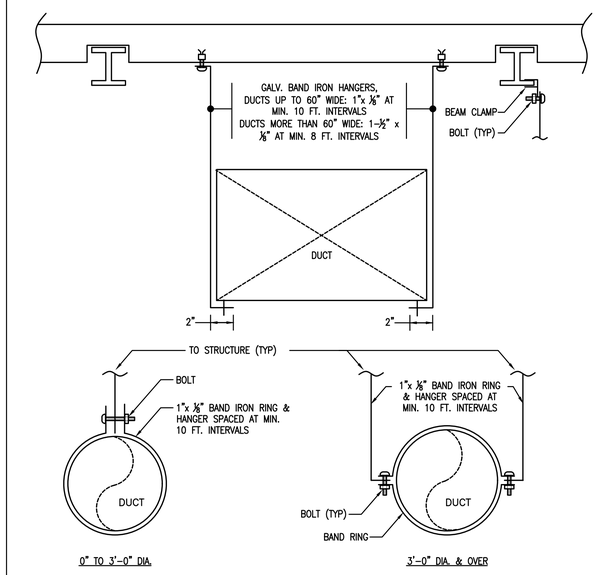


STANDARD DUCTWORK HANGING DETAIL | NTS

# JOSLIN RECREATION CENTER - CPF RENOVATION

17 Hyatt St., Providence, RI 2909

Owner:
City of Providence, Dept. of Public Property
25 Dorrance Street
Providence, Rhode Island 02903


ROWSE Architects
400 Massasoit Avenue
Suite 300, Second Floor
East Providence, Rhode Island
p. (401) 331-9200

2 Hampshire Street
Suite 106, First Floor
Foxboro, Massachusetts
p. (774) 215-0290

rowse@rowsearchitects.com



OWNERSHIP AND USE OF DOCUMENTS, DRAWINGS AND SPECIFICATIONS AS INSTRUMENTS OF PROFESSIONAL SERVICE, ARE, AND SHALL REMAIN, THE PROPERTY OF THE ARCHITECT. THESE DOCUMENTS ARE NOT TO BE USED, IN WHOLE OR IN PART, FOR ANY OTHER PROJECTS OR PURPOSES, OR BY ANY OTHER PARTIES THAN THOSE PROPERLY AUTHORIZED BY CONTRACT WITHOUT THE EXPRESS AUTHORIZATION OF THE ARCHITECT.



B|E|R
BUILDING ENGINEERING RESOURCES, INC.
66 Main Street
N. Easton, MA 02356
T 508.230.0260
F 508.230.0265
ber@ber-engineering.com

Office Commons 95
351 Centerville Road
Warwick, RI 02886
T 401.384.7682
www.ber-engineering.com


## GENERAL NOTES

1. CONTRACTOR SHALL VISIT SITE, PRIOR TO BID, AND CAREFULLY INVESTIGATE AND EXAMINE THE AREA OF WORK SO AS TO SATISFY HIMSELF AS TO THE NATURE AND LOCATION OF THE WORK. CONTRACTOR TO NOTE THE CHARACTER, QUALITY, QUANTITIES OF MATERIALS REQUIRED AND DIFFICULTIES TO BE ENCOUNTERED. THE KIND AND EXTENT OF EQUIPMENT AND FACILITIES NEEDED FOR PERFORMANCE OF THE WORK AND OTHER ITEMS WHICH MAY, IN ANY WAY, AFFECT THE WORK OR CONTRACTOR'S PERFORMANCE.

2. DRAWINGS DO NOT INCLUDE NECESSARY COMPONENTS FOR CONSTRUCTION SAFETY.

**Date:** 05/05/2025
**Drawn by:** JPK **Proj. Mgr.:** GAA
**Revisions**

| No. | Date | Description |
|---|---|---|
| | | |
| | | |
| | | |
| | | |
| | | |
| | | |
| | | |

MECHANICAL DETAILS

# M2.00



BER 24005

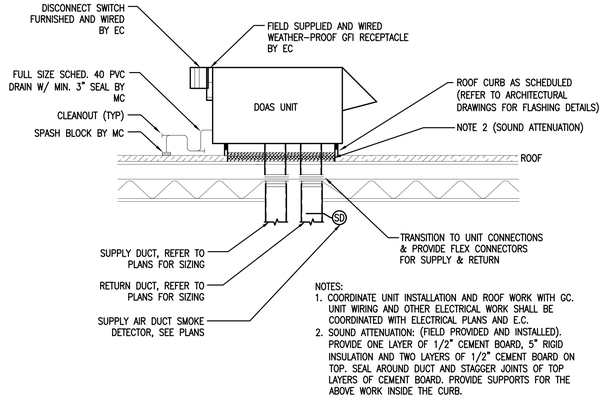


DEDICATED OUTDOOR AIR UNIT DETAIL | NTS

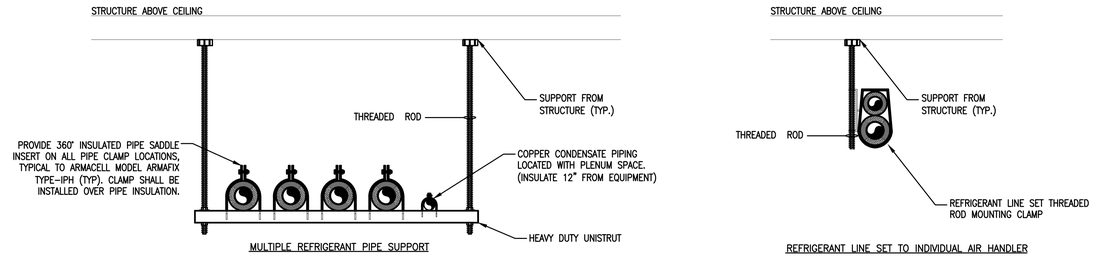


## GENERAL NOTES:

1. DETAIL IS SHOWN DIAGRAMATICALLY. PROVIDE ALL FRAMING CHANNELS, FITTINGS, BRACKETS, BOLTS, PLATES AND ALL REQUIRED ACCESSORIES TO BUILD A COMPLETE PIPE SUPPORT STRUCTURE.
2. PIPE SUPPORT SHALL BE EVERY 8'-0" O.C.
3. SWAY BRACING SHALL BE INSTALLED AT EACH CHANGE IN DIRECTION AND EVERY 12'-0".

REFRIGERANT PIPING SUPPORT SYSTEM DETAIL | NTS

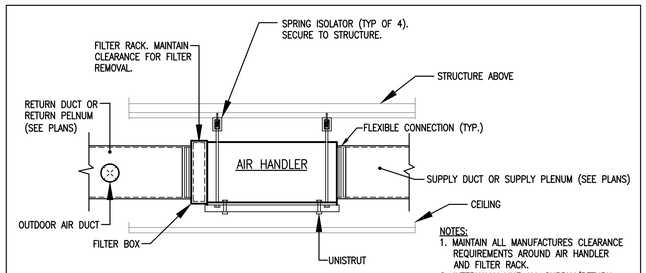


INDOOR AIR HANDLING MOUNTING DETAIL | NTS

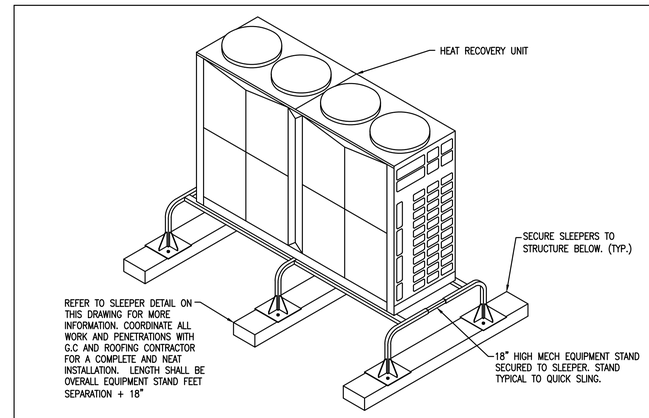


VRF CONDENSING UNIT MOUNTING DETAIL | NTS

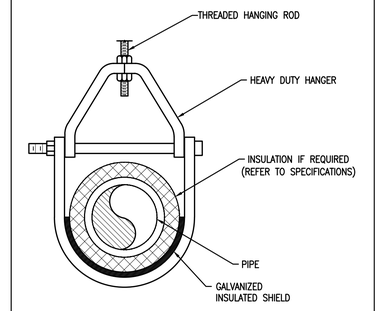


PIPE HANGER LOWER END ATTACHMENT DETAIL | NTS

# JOSLIN RECREATION CENTER - CPF RENOVATION

17 Hyatt St., Providence, RI 2909

Owner:
City of Providence, Dept. of Public Property
25 Dorrance Street
Providence, Rhode Island 02903

ROWSE Architects
400 Massasoit Avenue
Suite 300, Second Floor
East Providence, Rhode Island
p. (401) 331-9200

2 Hampshire Street
Suite 106, First Floor
Foxboro, Massachusetts
p. (774) 215-0290
rowse@rowsearchitects.com

OWNERSHIP AND USE OF DOCUMENTS, DRAWINGS AND SPECIFICATIONS AS INSTRUMENTS OF PROFESSIONAL SERVICE, ARE, AND SHALL REMAIN, THE PROPERTY OF THE ARCHITECT. THESE DOCUMENTS ARE NOT TO BE USED, IN WHOLE OR IN PART, FOR ANY OTHER PROJECTS OR PURPOSES, OR BY ANY OTHER PARTIES THAN THOSE PROPERLY AUTHORIZED BY CONTRACT WITHOUT THE EXPRESS AUTHORIZATION OF THE ARCHITECT.

B|E|R
BUILDING ENGINEERING RESOURCES, INC.
66 Main Street
N. Easton, MA 02356
T 508.230.0260
F 508.230.0265
ber@ber-engineering.com

Office Commons 95
351 Centerville Road
Warwick, RI 02886
T 401.384.7682
www.ber-engineering.com

## GENERAL NOTES

1. CONTRACTOR SHALL VISIT SITE, PRIOR TO BID, AND CAREFULLY INVESTIGATE AND EXAMINE THE AREA OF WORK SO AS TO SATISFY HIMSELF AS TO THE NATURE AND LOCATION OF THE WORK, CONTRACTOR TO NOTE THE CHARACTER, QUALITY, QUANTITIES OF MATERIALS REQUIRED AND DIFFICULTIES TO BE ENCOUNTERED, THE KIND AND EXTENT OF EQUIPMENT AND FACILITIES NEEDED FOR PERFORMANCE OF THE WORK AND OTHER ITEMS WHICH MAY, IN ANY WAY, AFFECT THE WORK OR CONTRACTOR'S PERFORMANCE.
2. DRAWINGS DO NOT INCLUDE NECESSARY COMPONENTS FOR CONSTRUCTION SAFETY.

**Date:** 05/05/2025
**Drawn by:** JPK **Proj. Mgr.:** CAA

**Revisions**

| No. | Date | Description |
|---|---|---|
| | | |

MECHANICAL DETAILS

# M2.01



BER# 24098

## PLUMBING DEMOLITION NOTES

1. PRIOR TO SUBMITTING BID, THE CONTRACTOR SHALL VISIT THE PROJECT SITE TO BECOME FAMILIAR WITH ALL EXISTING CONDITIONS AND TO DETERMINE THE EXTENT OF WORK TO REMOVE THE EXISTING PLUMBING SYSTEM INDICATED TO BE REMOVED. IF DISCREPANCIES EXIST BETWEEN DRAWINGS AND/OR SITE CONDITIONS, THE CONTRACTOR SHALL NOTIFY THE ARCHITECT/ENGINEER AND THE OWNER PRIOR TO SIGNING OF CONTRACT. REQUESTS FOR COMPENSATION FOR EXTRA WORK, WHICH WOULD HAVE BEEN EVIDENT BY COMPLIANCE WITH THE PREVIOUS STATEMENT, WILL NOT BE CONSIDERED.
2. DISCONNECT, DISMANTLE AND DEMOLISH ALL EXISTING DOMESTIC WATER, SANITARY WASTE & VENT AND NATURAL GAS AND MEDICAL GAS SUPPLY PIPING, INDICATED TO BE REMOVED, BACK TO RESPECTIVE MAINS TO REMAIN. EXISTING PLUMBING FIXTURES AND EQUIPMENT, INDICATED TO BE REMOVED, SHALL BE REMOVED IN THEIR ENTIRETY AND PROPERLY DISPOSED OF. EXISTING STORM DRAINAGE SUPPLY PIPING AND ROOF DRAINS SHALL REMAIN. EXISTING SUMP PUMPS AND ASSOCIATED PIPING, EQUIPMENT AND ACCESSORIES SHALL REMAIN. REMOVE ALL DEBRIS AND DISCONNECTED EQUIPMENT AND CLEAN OUT EXISTING SPACES. REFER TO ARCHITECTURAL AND PLUMBING CONTRACT DOCUMENTS FOR DEMOLITION WORK.
3. REMOVE AND DISCARD EXISTING PLUMBING ABANDONED STACKS, MAINS, BRANCHES AND VENTS SERVING FIXTURES TO BE DEMOLISHED. OBTAIN EXISTING RECORD DRAWINGS FROM OWNER.
4. VERIFY PIPING SERVES ONLY PLUMBING FIXTURES INDICATED FOR DEMOLITION BEFORE SHUT-DOWN FOR DISCONNECTION. IDENTIFY EXISTING PIPING WHICH SERVES FIXTURES TO REMAIN. PROMPTLY NOTIFY ARCHITECT OF ACTIVE PIPING TO BE MAINTAINED WHEN LOCATED IN PARTITIONS TO BE DEMOLISHED.
5. COORDINATE ALL SHUT-DOWNS, TIE-INS, ETC., WITH THE G.C. ELECTRICAL MAKE-SAFE OF PLUMBING EQUIPMENT REQUIRING DEMOLITION SHALL BE COMPLETED BY THE ELECTRICAL SUBCONTRACTOR.
6. DEMOLITION SUBCONTRACTOR MUST PROTECT EXISTING SLAB, WALL, FENCING AND BUILDING STRUCTURE DURING DEMOLITION PHASE. DAMAGE TO EXISTING STRUCTURE SHALL BE REPAIRED AT DEMOLITION SUBCONTRACTORS EXPENSE.
7. ALL DEMOLITION WORK PERFORMED SHALL BE DONE IN ACCORDANCE WITH THE APPLICABLE NATIONAL, STATE AND LOCAL CODES, LAWS AND ORDINANCES.
8. EXISTING UNDERGROUND PIPING NOTE:
CONTRACTOR SHALL SCOPE AND VERIFY INVERT ELEVATIONS OF ALL EXISTING UNDERGROUND SANITARY WASTE PIPING, IN AREA OF WORK, TO DETERMINE EXACT CONNECTION POINTS FOR NEW UNDERGROUND PIPING TO EXISTING PIPING PRIOR TO INSTALLATION. CONTRACTOR SHALL ALSO UNCLOG (ROOTER) AND FLUSH CLEAN EXISTING UNDERGROUND SANITARY WASTE PIPING AS REQUIRED. PROVIDE AS-BUILT DOCUMENTATION OF EXISTING UNDERGROUND PIPING LAYOUT TO OWNER PRIOR TO COMMENCEMENT OF DEMOLITION WORK.

## PLUMBING GENERAL NOTES

1. GENERAL NOTES, SYMBOLS LIST AND DETAILS ARE APPLICABLE TO ALL PLUMBING DRAWINGS.
2. DRAWINGS ARE DIAGRAMMATIC: DETERMINE LOCATIONS OF SYSTEMS AND COMPONENTS IN FIELD. DO NOT SCALE DRAWINGS.
3. NEITHER ACCURACY NOR COMPLETION OF UTILITY LOCATIONS SHOWN ON DRAWINGS IS GUARANTEED. DETERMINE EXACT LOCATIONS OF EXISTING UTILITIES IN FIELD, WHETHER OR NOT SHOWN ON DRAWINGS. EXERCISE CAUTION AND IDENTIFY LOCATIONS OF UNMARKED UTILITY LINES AS NECESSARY TO PERFORM WORK OF THIS SECTION.
4. ALL PLUMBING WORK SHALL BE IN ACCORDANCE WITH THE PRESIDING PLUMBING CODE AND ALL APPLICABLE LOCAL CODES.
5. IT SHALL BE THE RESPONSIBILITY OF THIS CONTRACTOR TO COORDINATE WORK WITH THAT OF ALL OTHER TRADES, INCLUDING (BUT NOT LIMITED TO), ELECTRICAL, HVAC, PROCESS PIPING, FIRE PROTECTION, STRUCTURAL AND GENERAL ARCHITECTURE.
6. ANY INTERFERENCE SHALL BE BROUGHT TO THE ATTENTION OF THE GENERAL CONTRACTOR, AND/OR THE OWNER'S REPRESENTATIVE, AND RESOLVED PRIOR TO THE INSTALLATION OF THE WORK INVOLVED.
7. ALL PIPING PENETRATING CEILINGS AND WALLS SHALL BE INSTALLED WITH CHROME (STAINLESS WHERE NOTED) PLATED ESCUTCHEONS AT THE PENETRATION. ALL PIPING PENETRATING EXTERIOR WALLS AND ROOFS SHALL BE FLASHED IN AN APPROVED MANNER AND SHALL BE SEALED WEATHERTIGHT. PIPING PENETRATING RATED PARTITIONS SHALL BE PROTECTED WITH UL LISTED SEALS OF EQUAL RATING AND AS REQUIRED BY LOCAL CODE AUTHORITY.
8. MANUFACTURERS' MODEL NUMBERS ARE SPECIFIED SOLELY TO ESTABLISH STANDARDS OF QUALITY FOR PERFORMANCE AND MATERIALS.
9. ALL PRODUCT INSTALLATION SHALL ADHERE TO THE MANUFACTURERS' RECOMMENDATIONS.
10. PROVIDE ACCESS PANELS FOR ALL EQUIPMENT THAT REQUIRES PERIODIC SERVICE AND FOR ALL VALVES.
11. CONTRACTOR SHALL COORDINATE ELECTRICAL CHARACTERISTICS AND REQUIREMENTS OF ALL PLUMBING EQUIPMENT WITH THE ELECTRICAL DRAWINGS, AND SHALL FURNISH EQUIPMENT WIRED FOR THE VOLTAGES SHOWN HEREIN.
12. ALL PLUMBING EQUIPMENT, PIPING, INSULATION, ETC., INSTALLED IN HVAC PLENUM SPACES SHALL MEET CODE REQUIREMENTS FOR SMOKE AND COMBUSTIBILITY.
13. PROVIDE SHUTOFF VALVES ON ALL BRANCH PIPING AND SUPPLIES TO INDIVIDUAL FIXTURES AND EQUIPMENT. PROVIDE BALL VALVES ON ALL WATER MAIN BRANCHES IN CORRIDORS AND WHERE INDICATED ON DRAWINGS. ALL VALVES SHALL BE ACCESSIBLE.
14. ALL SLEEVES THROUGH CONCRETE FLOORS AND ALL CORE DRILLING OF CONCRETE FLOORS AND WALLS SHALL BE BY THIS CONTRACTOR. CONCRETE PADS AND PLATFORMS FOR WORK OF THIS SECTION WILL BE PROVIDED BY GENERAL CONTRACTOR. PROVIDE INFORMATION AS NECESSARY TO COORDINATE WORK.
15. RUN PIPING CONCEALED WHERE POSSIBLE, UNLESS SPECIFIED OTHERWISE.
16. STRUCTURAL WELDING SHALL BE 1/4-INCH FILLET UNLESS REQUIRED OTHERWISE.
17. PROVIDE CLAMPS, OFFSETS, EXPANSION JOINTS, ANCHORS AND GUIDES AS NECESSARY TO PREVENT STRESS ON PIPING.
18. PROVIDE BALANCING VALVES AT SYSTEM LOOP RETURNS AND AT RETURN RISERS, PROVIDE SHUTOFF VALVES AT SYSTEM LOOP SUPPLIES AND SUPPLY RISERS.
19. PROVIDE VENTS AT HIGH POINTS IN PIPING SYSTEMS AND DRAIN VALVES AT LOW POINTS.
20. PROVIDE GAUGE FITTINGS AND THERMOMETER WELLS AT HOT WATER SUPPLY AND RETURN BRANCHES AND AT PUMP INLETS AND OUTLETS.
21. VERIFY EXACT SIZES, LOCATIONS, INVERTS AND ELEVATIONS PRIOR TO RUNNING ANY PIPING. REFER TO ARCHITECTURAL DRAWINGS AND FOOD SERVICE DRAWINGS FOR EXACT LOCATIONS OF ALL FIXTURES AND EQUIPMENT.
22. PIPE SUPPORTS FOR PLUMBING IN BUILDING SHAFTS ARE BY THIS CONTRACTOR. CAREFULLY COORDINATE WITH PLACEMENT OF STEEL GRATE SUPPORT BEAMS. SHAFT PIPE SUPPORT SHALL BEAR FROM WALL AND FROM FLOOR SUPPORT BEAMS.
23. GENERAL FLOOR CONTROL VALVES OF PIPED SERVICES SHALL BE IN THE PIPE SHAFTS UNLESS OTHERWISE INDICATED.
24. OBTAIN GAS PERMITS AND DEFRAY ALL COSTS INCIDENTAL TO THE GAS PIPING SYSTEM. CONTRACTORS WORK SHALL COMMENCE ON THE HOUSE SIDE OF THE UTILITY COMPANY METER.
25. A SUITABLE DRIP OF CONDENSATE POCKET SHALL BE INSTALLED AT THE BOTTOM OF ALL GAS RISERS.
26. ALL GAS PIPING TO COMPLY WITH LOCAL AND STATE CODES.
27. GAS PIPING AND SAFETY DEVICES SHALL CONFORM TO REQUIREMENTS OF NFPA 54 AND SHALL BE SUBJECT TO THE INSPECTION AND APPROVAL OF THE AUTHORITY HAVING JURISDICTION.
28. PROVIDE A SUITABLE GAS COCK VALVE AT EACH BRANCH RUNOUT FROM THE MAIN SERVING GAS OUTLETS AND INDIVIDUAL GAS FIXTURES.
29. GAS PIPING SHALL BE TESTED ACCORDING TO THE STATE FUEL GAS CODE AND NATIONAL CODE PROVISIONS OF THE LOCAL PLUMBING INSPECTOR. IF INSPECTION OF THE TEST SHOWS DEFECTS, SUCH DEFECTIVE WORK AND MATERIAL SHALL BE REPLACED AND INSPECTION AND TEST SHALL BE REDONE.
30. PLUMBING CONTRACTOR IS RESPONSIBLE FOR EXTENDING ALL REGULATOR VENTS TO ATMOSPHERE. REGULATORS ARE PART OF EQUIPMENT GAS TRANL PIPE ALL GAS TRAN VENTS FROM HVAC BOILERS TO ATMOSPHERE.
31. NO PIPING SHALL RUN OVER ELECTRICAL PANELS.
32. ALL PIPING THAT PENETRATES FLOORS OR FIRE RATED WALLS SHALL BE FIRE STOPPED W/ HILTI CAULKING PER MANUFACTURERS RECOMMENDATIONS.
33. ELECTRICAL SUB CONTRACTOR IS RESPONSIBLE FOR PROVIDING POWER TO ALL EQUIPMENT AND CONTROLS WITHIN THE PLUMBING SYSTEMS FOR THIS PROJECT.
34. PC TO ORGANIZE/LOCATE CUT OUTS FOR PIPING/CONDUITS RUNNING PERPENDICULAR TO THE FLOOR JOISTS W/ GC. COORDINATE AND VERIFY IN FIELD.
35. COORDINATE ALL CEILING AND WALL MOUNTED FIXTURES AND EQUIPMENT WITH ARCHITECTURAL DRAWING. LOCATE FIXTURES AND EQUIPMENT AS INDICATED ON ARCHITECTURAL DRAWINGS WHERE ACCEPTABLE BY CODE.
36. ALL SLEEVES THROUGH CONCRETE FLOORS AND FIRE RATED WALLS OR PARTITIONS SHALL BE FIRE STOPPED WITH UL RATED ASSEMBLIES OF EQUAL FIRE RATING.

## PLUMBING LEGEND

| | | |
|---|---|---|
| | ETR | LIGHT LINE INDICATES EXISTING PIPING TO REMAIN |
| | RE | REMOVE EXISTING PIPING |
| | CTE | CONNECT TO EXISTING |
| | C&C | CUT & CAP |
| CW | CW | COLD WATER |
| | | |
| CW | CW | COLD WATER BELOW FLOOR OR BURIED |
| HW | HW | HOT WATER |
| HWR | HWR | HOT WATER RECIRCULATION |
| S / W | S / W | SOIL OR WASTE |
| S/W | S / W | SOIL OR WASTE BELOW FLOOR OR BURIED |
| V | V | VENT |
| V | V | VENT BELOW FLOOR OR BURIED |
| ST | ST | STORM/RAINWATER |
| | | CONTINUATION |
| UP / RISER | | PIPE RISER |
| DR / DN | | PIPE DROP OR DOWN |
| TEE | | PIPE TEE |
| | | BALL VALVE |
| | | GATE VALVE |
| SOV | | SHUT-OFF VALVE |
| VIV | | VALVE IN VERTICAL |
| CV | | CHECK VALVE |
| BVA | | BALANCING VALVE ASSEMBLY |
| W & T | | WASTE & TRAP |
| CO, WCO | | CLEANOUT PLUG OR WALL CLEANOUT |
| FCO | | FLOOR CLEANOUT |
| DCO | | DANDY CLEANOUT |
| | | CAPPED PIPE |
| | | ARROW INDICATES DIRECTION OF FLOW |
| .01 | | ARROW INDICATES DIRECTION OF SLOPE |
| | | UNION |
| HB | | HOSE BIBB |
| WH | | WALL HYDRANT |
| | | INLINE PUMP OR CIRCULATOR |
| FD | | FLOOR DRAIN |
| RD | | ROOF DRAIN |
| RPBP | | REDUCED PRESSURE BACKFLOW PREVENTER |
| WM | | WATER METER |
| VTR | | VENT THRU ROOF |
| VIF | | VERIFY EXACT LOCATION, SIZE & LOCATION IN FIELD |
| I.E. | | INVERT ELEVATION |
| TYP | | TYPICAL |
| NTS | | NOT TO SCALE |
| AFF | | ABOVE FINISHED FLOOR |
| FFE | | FINISHED FLOOR ELEVATION |
| F&I | | FURNISH & INSTALL |
| LPC | | LIMIT OF PLUMBING CONTRACT |
| GC | | GENERAL CONTRACTOR |
| FPC | | FIRE PROTECTION CONTRACTOR |
| PC | | PLUMBING CONTRACTOR |
| EC | | ELECTRICAL CONTRACTOR |
| HVAC | | HVAC CONTRACTOR |
| S=.01 | | SLOPE = 1/8" PER FOOT |
| S=.02 | | SLOPE = 1/4" PER FOOT |

## THERMOSTATIC MIXING VALVE SCHEDULE

| SYMBOL | MANUFACTURER | MODEL # | FLOW RATE | WATER SUPPLY CW | WATER SUPPLY HW | REMARKS |
|---|---|---|---|---|---|---|
| TMV-1 | POWERS | LFMM431 | 20 GPM | 1¼" | 1¼" | THERMOSTATIC MIXING VALVE, LEAD-FREE, SET TEMPERATURE TO 120°. MAX DIFF. PRESSURE = 5 PSI. PROVIDE WALL MOUNTING BRACKET. |

NOTES:
PROVIDE WALL MOUNTING BRACKET. INSTALL PER ALL STATE & LOCAL CODES AND MANUFACTURER'S INSTALLATION REQUIREMENTS.

## EXPANSION TANK SCHEDULE

| SYMBOL | MANUFACTURER | MODEL # | CAPACITY | MAX. ACCEPT. FACTOR | CW SUPPLY | REMARKS |
|---|---|---|---|---|---|---|
| ET-1 | AMTROL | ST-5C | 2 GALLONS | 0.9 | 3/4" | THERMAL EXPANSION TANK, IN-LINE, MAX. OPERATING TEMPERATURE - 200°F, MAX. WORKING PRESSURE - 150 PSIG, CHARGE TO CITY WATER PRESSURE. |

NOTES:
INSTALL PER ALL STATE & LOCAL CODES AND MANUFACTURER'S INSTALLATION REQUIREMENTS.

## DRAIN SCHEDULE

| SYMBOL | TYPE | MANUFACTURER | MODEL | OUTLET | STRAINER | REMARKS |
|---|---|---|---|---|---|---|
| FD-1 | FLOOR DRAIN | WATTS | FD-100-B-60 | 2" | 6"ϕ NICKEL BRONZE | PVC BODY, NO-HUB, ADJUSTABLE STRAINER, VANDAL RESISTANT. |
| FD-2 | FLOOR DRAIN | WATTS | FD-100-B-5-60 | 4" | 8"ϕ NICKEL BRONZE | PVC BODY, NO-HUB, ADJUSTABLE STRAINER, VANDAL RESISTANT, SEDIMENT BUCKET. |

NOTES:
ALL FLOOR DRAINS SHALL HAVE TRAP SEAL GASKETS EQUAL TO "SURE SEAL". INSTALLATIONS SHALL BE IN COMPLETE ACCORDANCE WITH ALL STATE & LOCAL CODES.

## WATER HEATER SCHEDULE

| SYMBOL | MANUFACTURER | MODEL # | CAPACITY | RECOVERY GPH | RECOVERY ΔT | WATER SUPPLY CW | WATER SUPPLY HW | GAS CFH | ELECTRICAL kW | ELECTRICAL VOLTS | ELECTRICAL PHASE | ELECTRICAL HZ | REMARKS |
|---|---|---|---|---|---|---|---|---|---|---|---|---|---|
| EWH-1 | AO SMITH | DRE 52 12 | 50 GALLONS | 50 | 100° | 1¼" | 1¼" | - | 12 | 208 | 3 | 60 | ELECTRIC TANK TYPE WATER HEATER. COORDINATE EXACT LOCATION WITH ARCHITECT PRIOR TO INSTALLATION. PROVIDE DRAIN PAN. PIPE DRAIN LINE TO FLOOR DRAIN. |

NOTES:
1. INSTALL PER ALL STATE & LOCAL CODES AND MANUFACTURER'S INSTALLATION REQUIREMENTS.

## PLUMBING FIXTURE SCHEDULE

| SYMBOL | DESCRIPTION | FIXTURE MANUFACTURER | FIXTURE MODEL | FIXTURE TYPE | FIXTURE SIZE | FIXTURE MANUFACTURER | FIXTURE MODEL | FIXTURE TYPE | SERVICES S/W | SERVICES V | SERVICES CW | SERVICES HW | SERVICES TW | REMARKS |
|---|---|---|---|---|---|---|---|---|---|---|---|---|---|---|
| P-1 | WATER CLOSET - ADA | AMERICAN STANDARD | 3461.001 | FLOOR MOUNTED | 1.28 GPF | SLOAN | ROYAL 111 | MANUAL FLUSH VALVE | 4" | 2" | 1" | - | - | VITREOUS CHINA, ELONGATED, HIGH EFFICIENCY, LOW CONSUMPTION, POLISHED CHROME, VACUUM BREAKER SET, TOP SPUD, FLUSH VALVE. AMERICAN STANDARD #5901.100 OPEN FRONT SEAT. PROVIDE HEAVY DUTY CHROME PLATED SUPPLY & STOP. BARRIER FREE, ADA COMPLIANT. |
| P-2 | LAVATORY - ADA | AMERICAN STANDARD | 0356.421 | WALL HUNG | 20⅛"x18¼" | CHICAGO | EQ-A11A-12ABCP | SENSOR | 1½" | 1½" | 1/2" | 1/2" | - | VITREOUS CHINA, 15"x10"x6½" DEEP BOWL W/ OVERFLOW, 1-HOLE. 0.5 GPM SENSOR FAUCET W/ GRID STRAINER DRAIN & MIXING VALVE SET TO 110°. PROVIDE CHROME PLATED HEAVY DUTY OFFSET P-TRAP W/ CLEANOUT, SUPPLIES & STOPS. PROVIDE TRUEBRO LAVGUARD INSULATION ON EXPOSED PIPING. BARRIER FREE, ADA COMPLIANT. |
| P-3 | SINK | ELKAY | ELUHAD161655 | UNDERMOUNT | 18½"x18½"x5⅜" | CHICAGO | 895-317GN2AE35ABCP | MANUAL | 2" | 1½" | 1/2" | 1/2" | - | STAINLESS STEEL, UNDERMOUNT, 1-BOWL: 16"x16"x5⅜"DEEP, POLISHED CHROME GOOSENECK FAUCET W/ VANDAL PROOF 4-INCH WRISTBLADE HANDLES. PROVIDE CHROME PLATED HEAVY DUTY P-TRAP W/ CLEANOUT, SUPPLIES & STOPS. BARRIER FREE, ADA COMPLIANT. |
| P-4 | SHOWER - ADA | AQUATIC | 6036BFSC | ENCLOSURE | 60"x36"x79" | SYMMONS | 9605-PLR | MANUAL | 2" | 1½" | 1/2" | 1/2" | - | SHOWER ENCLOSURE. PROVIDE & INSTALL SHOWER CURTAIN & ROD. TEMPITROL PRESSURE-BALANCING MIXING VALVE W/ ADJUSTABLE STOP SCREW TO LIMIT HANDLE TURN. 1.5 GPM SHOWER/HAND SHOWER SYSTEM W/ SLIDE BAR, SEPARATE DUAL OUTLET DIVERTER, IN-LINE VACUUM BREAKER. BARRIER FREE, ADA COMPLIANT. |
| HB-1 | HOSE BIBB | JR SMITH | 5670-H-CP | WALL MOUNTED | 3½"x2¾" | - | - | - | - | - | 1/2" | - | - | BRASS BODY, VACUUM BREAKER AND REMOVABLE WHEEL HANDLE. |
| WH-1 | EXTERIOR WALL HYDRANT | JR SMITH | 5609QT-WC-CP | WALL MOUNTED | 4"x2½" | - | - | - | - | - | 3/4" | - | - | WALL MOUNTED HOSE CONNECTION, CHROME PLATED, TOP-MOUNTED SUPPLIES, RIGID SPOUT W/ VACUUM BREAKER, ¾" MALE HOSE THREAD OUTLET |

NOTES:
1. ALL BARRIER FREE & ADA FIXTURES SHALL BE INSTALLED PER ALL STATE & LOCAL CODES AND ADA REQUIREMENTS.
2. ALL PLUMBING FIXTURES, EQUIPMENT & ACCESSORIES SHALL BE INSTALLED PER MANUFACTURER'S REQUIREMENTS.
3. COORDINATE ALL PLUMBING FIXTURE MOUNTING HEIGHTS W/ ARCHITECTURAL DRAWINGS.

# JOSLIN RECREATION CENTER - CPF RENOVATION

17 Hyatt St., Providence, RI 2909

Owner:
City of Providence, Dept. of Public Property
25 Dorrance Street
Providence, Rhode Island 02903


ROWSE Architects
400 Massasoit Avenue
Suite 300, Second Floor
East Providence, Rhode Island
p. (401) 331-9200

2 Hampshire Street
Suite 106, First Floor
Foxboro, Massachusetts
p. (774) 215-0290
rowse@rowsearchitects.com



OWNERSHIP AND USE OF DOCUMENTS, DRAWINGS AND SPECIFICATIONS AS INSTRUMENTS OF PROFESSIONAL SERVICE, ARE, AND SHALL REMAIN, THE PROPERTY OF THE ARCHITECT. THESE DOCUMENTS ARE NOT TO BE USED, IN WHOLE OR IN PART, FOR ANY OTHER PROJECTS OR PURPOSES, OR BY ANY OTHER PARTIES THAN THOSE PROPERLY AUTHORIZED BY CONTRACT WITHOUT THE EXPRESS AUTHORIZATION OF THE ARCHITECT.



B|E|R
BUILDING ENGINEERING RESOURCES, INC.
66 Main Street
N. Easton, MA 02356
T 508.230.0260
F 508.230.0265
ber@ber-engineering.com

Office Commons 95
351 Centerville Road
Warwick, RI 02886
T 401.384.7682
www.ber-engineering.com


### GENERAL NOTES

1. CONTRACTOR SHALL VISIT SITE, PRIOR TO BID, AND CAREFULLY INVESTIGATE AND EXAMINE THE AREA OF WORK SO AS TO SATISFY HIMSELF AS TO THE NATURE AND LOCATION OF THE WORK. CONTRACTOR TO NOTE THE CHARACTER, QUALITY, QUANTITIES OF MATERIALS REQUIRED AND DIFFICULTIES TO BE ENCOUNTERED, THE KIND AND EXTENT OF EQUIPMENT AND FACILITIES NEEDED FOR PERFORMANCE OF THE WORK AND OTHER ITEMS WHICH MAY, IN ANY WAY, AFFECT THE WORK OR CONTRACTOR'S PERFORMANCE.
2. DRAWINGS DO NOT INCLUDE NECESSARY COMPONENTS FOR CONSTRUCTION SAFETY.

**Date:** 05/05/2025
**Drawn by:** AG **Proj. Mgr.:** ARV

**Revisions**

| No. | Date | Description |
|---|---|---|
| | | |
| | | |
| | | |
| | | |
| | | |
| | | |

PLUMBING LEGEND, NOTES & SCHEDULES

# P0.01

###### - P0.01 | 37 of 87

BER# 24098

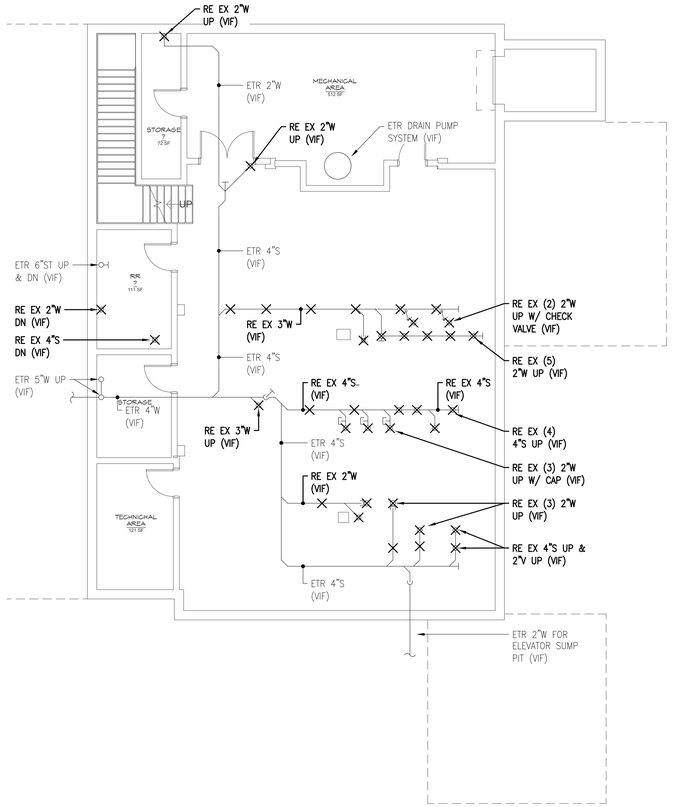


1 PD1.00 BASEMENT DEMOLITION PLAN - SANITARY, WASTE, VENT, & STORM

1/8" = 1'-0"

**NOTE:**
ALL EXISTING SUPPLY PIPING, PUMPS & EQUIPMENT SERVICE THE REMOVED POOL SHALL BE REMOVED IN ITS ENTIRETY. ALL PIPING & VALVES SERVICING THE EXITSING TO REMAIN SPALSH PAD SHALL BE EXISTING TO REMAIN (VIF)

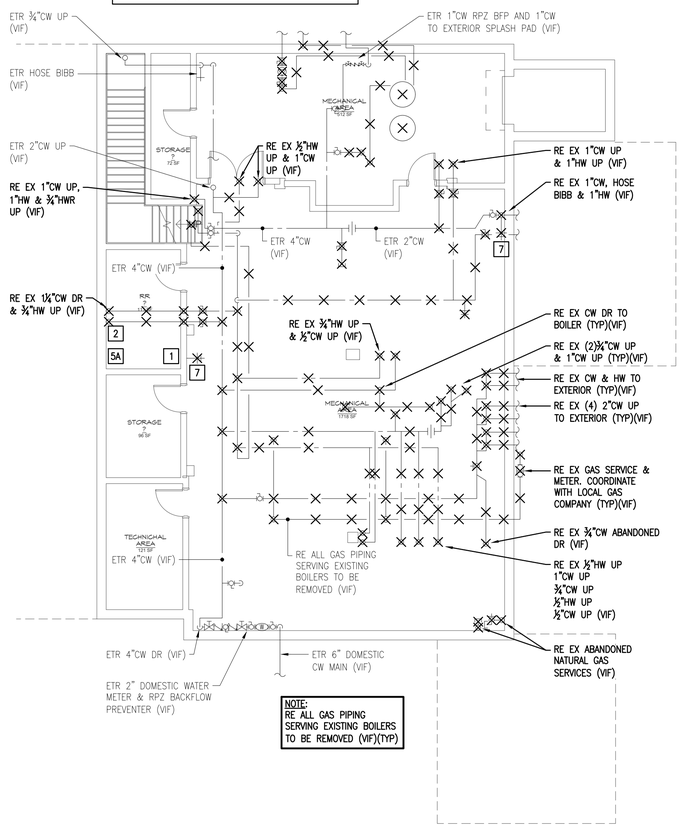


**NOTE:**
RE ALL GAS PIPING SERVING EXISTING BOILERS TO BE REMOVED (VIF)(TYP)

2 PD1.00 BASEMENT DEMOLITION PLAN - DOMESTIC WATER & GAS

1/8" = 1'-0"

## PLUMBING DEMO KEY NOTES

1. REMOVE AND DISCARD EXISTING FLOOR MOUNTED WATER CLOSET AND FLUSH VALVE. CUT AND CAP EXISTING COLD WATER SUPPLY AND SANITARY WASTE AND VENT LINES BACK TO EXISTING RESPECTIVE MAIN LINES.
2. REMOVE AND DISCARD EXISTING WALL HUNG LAVATORY & FAUCET. CUT AND CAP EXISTING HOT & COLD WATER SUPPLY AND WASTE & VENT LINES BACK TO EXISTING RESPECTIVE MAIN LINES.
3. REMOVE AND DISCARD EXISTING WALL MOUNTED URINAL, CARRIER AND FLUSH VALVE. CUT AND CAP EXISTING COLD WATER SUPPLY AND WASTE & VENT LINES BACK TO EXISTING RESPECTIVE MAIN LINES.
3A. REMOVE AND DISCARD EXISTING FLOOR MOUNTED URINAL AND FLUSH VALVE. CUT AND CAP EXISTING COLD WATER SUPPLY AND WASTE & VENT LINES BACK TO EXISTING RESPECTIVE MAIN LINES.
4. REMOVE AND DISCARD EXISTING COUNTER MOUNTED SINK & FAUCET. CUT AND CAP EXISTING HOT & COLD WATER SUPPLY AND WASTE & VENT LINES BACK TO EXISTING RESPECTIVE MAIN LINES.
5. REMOVE AND DISCARD EXISTING SHOWER. CUT AND CAP EXISTING HOT & COLD WATER SUPPLY AND WASTE & VENT LINES BACK TO EXISTING RESPECTIVE MAIN LINES.
5A. REMOVE AND DISCARD EXISTING SHOWER ENCLOSURE & FAUCET. CUT AND CAP EXISTING HOT & COLD WATER SUPPLY AND SANITARY WASTE & VENT LINES BACK TO EXISTING RESPECTIVE MAIN LINES.
6. REMOVE AND DISCARD EXISTING FLOOR DRAIN. CUT AND CAP EXISTING WASTE & VENT LINES BACK TO EXISTING RESPECTIVE MAINS.
7. REMOVE AND DISCARD EXISTING HOSE BIBB. CUT AND CAP EXISTING CW LINE BACK TO EXISTING RESPECTIVE MAIN.
8. REMOVE AND DISCARD EXISTING EXTERIOR WALL MOUNTED WALL HYDRANT. CUT AND CAP EXISTING CW LINE BACK TO EXISTING RESPECTIVE MAIN.

NOTES:
1. COORDINATE EXISTING PLUMBING FIXTURES AND EQUIPMENT PRIOR TO REMOVAL. SALVAGE ANY EXISTING PLUMBING FIXTURES & EQUIPMENT AS REQUIRED AND RETURN TO THE OWNER.
2. VERIFY EXACT LOCATIONS OF ALL ABOVE AND BELOW GROUND DOMESTIC WATER, SANITARY WASTE & VENT, STORM DRAINAGE AND NATURAL GAS SUPPLY & MAIN PIPING IN FIELD.

# JOSLIN RECREATION CENTER - CPF RENOVATION

17 Hyatt St., Providence, RI 2909

Owner:
City of Providence, Dept. of Public Property
25 Dorrance Street
Providence, Rhode Island 02903


ROWSE Architects
400 Massasoit Avenue
Suite 300, Second Floor
East Providence, Rhode Island
p. (401) 331-9200

2 Hampshire Street
Suite 106, First Floor
Foxboro, Massachusetts
p. (774) 215-0290

rowse@rowsearchitects.com



OWNERSHIP AND USE OF DOCUMENTS, DRAWINGS AND SPECIFICATIONS AS INSTRUMENTS OF PROFESSIONAL SERVICE, ARE, AND SHALL REMAIN, THE PROPERTY OF THE ARCHITECT. THESE DOCUMENTS ARE NOT TO BE USED, IN WHOLE OR IN PART, FOR ANY OTHER PROJECTS OR PURPOSES, OR BY ANY OTHER PARTIES THAN THOSE PROPERLY AUTHORIZED BY CONTRACT WITHOUT THE EXPRESS AUTHORIZATION OF THE ARCHITECT.



B|E|R
BUILDING ENGINEERING RESOURCES, INC.
66 Main Street
N. Easton, MA 02356
T 508.230.0260
F 508.230.0265
ber@ber-engineering.com

Office Commons 95
351 Centerville Road
Warwick, RI 02886
T 401.384.7682
www.ber-engineering.com


## GENERAL NOTES

1. CONTRACTOR SHALL VISIT SITE, PRIOR TO BID, AND CAREFULLY INVESTIGATE AND EXAMINE THE AREA OF WORK SO AS TO SATISFY HIMSELF AS TO THE NATURE AND LOCATION OF THE WORK. CONTRACTOR TO NOTE THE CHARACTER, QUALITY, QUANTITIES OF MATERIALS REQUIRED AND DIFFICULTIES TO BE ENCOUNTERED. THE KIND AND EXTENT OF EQUIPMENT AND FACILITIES NEEDED FOR PERFORMANCE OF THE WORK AND OTHER ITEMS WHICH MAY, IN ANY WAY, AFFECT THE WORK OR CONTRACTOR'S PERFORMANCE.
2. DRAWINGS DO NOT INCLUDE NECESSARY COMPONENTS FOR CONSTRUCTION SAFETY.

**Date:** 05/05/2025

**Drawn by:** AG **Proj. Mgr.:** ARV

**Revisions**

| No. | Date | Description |
|---|---|---|
| | | |
| | | |
| | | |
| | | |
| | | |
| | | |
| | | |
| | | |

PLUMBING
BASEMENT DEMOLITION
FLOOR PLANS

# PD1.00



BER# 24001

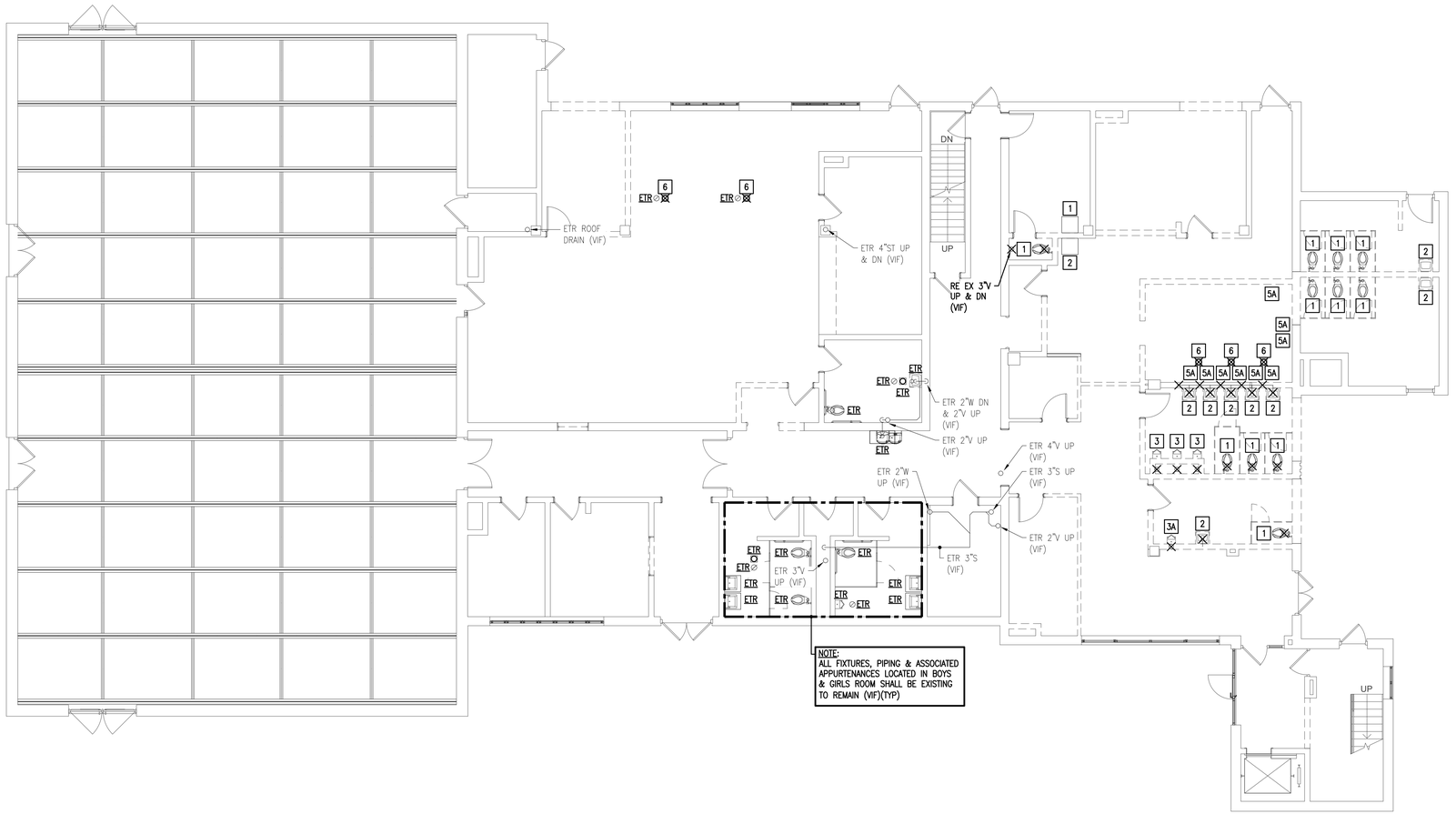


1 PD1.01 FIRST FLOOR DEMOLITION PLAN - SANITARY, WASTE, VENT & STORM

1/8" = 1'-0"

## PLUMBING DEMO KEY NOTES

1. REMOVE AND DISCARD EXISTING FLOOR MOUNTED WATER CLOSET AND FLUSH VALVE. CUT AND CAP EXISTING COLD WATER SUPPLY AND SANITARY WASTE AND VENT LINES BACK TO EXISTING RESPECTIVE MAIN LINES.
2. REMOVE AND DISCARD EXISTING WALL HUNG LAVATORY & FAUCET. CUT AND CAP EXISTING HOT & COLD WATER SUPPLY AND WASTE & VENT LINES BACK TO EXISTING RESPECTIVE MAIN LINES.
3. REMOVE AND DISCARD EXISTING WALL MOUNTED URINAL, CARRIER AND FLUSH VALVE. CUT AND CAP EXISTING COLD WATER SUPPLY AND WASTE & VENT LINES BACK TO EXISTING RESPECTIVE MAIN LINES.
- 3A. REMOVE AND DISCARD EXISTING FLOOR MOUNTED URINAL AND FLUSH VALVE. CUT AND CAP EXISTING COLD WATER SUPPLY AND WASTE & VENT LINES BACK TO EXISTING RESPECTIVE MAIN LINES.
4. REMOVE AND DISCARD EXISTING COUNTER MOUNTED SINK & FAUCET. CUT AND CAP EXISTING HOT & COLD WATER SUPPLY AND WASTE & VENT LINES BACK TO EXISTING RESPECTIVE MAIN LINES.
5. REMOVE AND DISCARD EXISTING SHOWER. CUT AND CAP EXISTING HOT & COLD WATER SUPPLY AND WASTE & VENT LINES BACK TO EXISTING RESPECTIVE MAIN LINES.
- 5A. REMOVE AND DISCARD EXISTING SHOWER ENCLOSURE & FAUCET. CUT AND CAP EXISTING HOT & COLD WATER SUPPLY AND SANITARY WASTE & VENT LINES BACK TO EXISTING RESPECTIVE MAIN LINES.
6. REMOVE AND DISCARD EXISTING FLOOR DRAIN. CUT AND CAP EXISTING WASTE & VENT LINES BACK TO EXISTING RESPECTIVE MAINS.
7. REMOVE AND DISCARD EXISTING HOSE BIBB. CUT AND CAP EXISTING CW LINE BACK TO EXISTING RESPECTIVE MAIN.
8. REMOVE AND DISCARD EXISTING EXTERIOR WALL MOUNTED WALL HYDRANT. CUT AND CAP EXISTING CW LINE BACK TO EXISTING RESPECTIVE MAIN.

NOTES:
1. COORDINATE EXISTING PLUMBING FIXTURES AND EQUIPMENT PRIOR TO REMOVAL. SALVAGE ANY EXISTING PLUMBING FIXTURES & EQUIPMENT AS REQUIRED AND RETURN TO THE OWNER.
2. VERIFY EXACT LOCATIONS OF ALL ABOVE AND BELOW GROUND DOMESTIC WATER, SANITARY WASTE & VENT, STORM DRAINAGE AND NATURAL GAS SUPPLY & MAIN PIPING IN FIELD.

# JOSLIN RECREATION CENTER - CPF RENOVATION

17 Hyatt St., Providence, RI 2909

Owner:
City of Providence, Dept. of Public Property
25 Dorrance Street
Providence, Rhode Island 02903

ROWSE Architects
400 Massasoit Avenue
Suite 300, Second Floor
East Providence, Rhode Island
p. (401) 331-9200

2 Hampshire Street
Suite 106, First Floor
Foxboro, Massachusetts
p. (774) 215-0290
rowse@rowsearchitects.com

OWNERSHIP AND USE OF DOCUMENTS, DRAWINGS AND SPECIFICATIONS AS INSTRUMENTS OF PROFESSIONAL SERVICE, ARE, AND SHALL REMAIN, THE PROPERTY OF THE ARCHITECT. THESE DOCUMENTS ARE NOT TO BE USED, IN WHOLE OR IN PART, FOR ANY OTHER PROJECTS OR PURPOSES, OR BY ANY OTHER PARTIES THAN THOSE PROPERLY AUTHORIZED BY CONTRACT WITHOUT THE EXPRESS AUTHORIZATION OF THE ARCHITECT.

B|E|R
BUILDING ENGINEERING RESOURCES, INC.
66 Main Street
N. Easton, MA 02356
T 508.230.0260
F 508.230.0265
ber@ber-engineering.com

Office Commons 95
351 Centerville Road
Warwick, RI 02886
T 401.384.7682
www.ber-engineering.com

## GENERAL NOTES

1. CONTRACTOR SHALL VISIT SITE, PRIOR TO BID, AND CAREFULLY INVESTIGATE AND EXAMINE THE AREA OF WORK SO AS TO SATISFY HIMSELF AS TO THE NATURE AND LOCATION OF THE WORK. CONTRACTOR TO NOTE THE CHARACTER, QUALITY, QUANTITIES OF MATERIALS REQUIRED AND DIFFICULTIES TO BE ENCOUNTERED. THE KIND AND EXTENT OF EQUIPMENT AND FACILITIES NEEDED FOR PERFORMANCE OF THE WORK AND OTHER ITEMS WHICH MAY, IN ANY WAY, AFFECT THE WORK OR CONTRACTOR'S PERFORMANCE.
2. DRAWINGS DO NOT INCLUDE NECESSARY COMPONENTS FOR CONSTRUCTION SAFETY.

**Date:** 05/05/2025
**Drawn by:** AG **Proj. Mgr.:** ARV

**Revisions**

| No. | Date | Description |
|---|---|---|
| | | |
| | | |
| | | |
| | | |
| | | |
| | | |
| | | |
| | | |

PLUMBING
FIRST FLOOR DEMOLITION PLAN - SANITARY, WASTE, VENT & STORM

# PD1.01



BER# 24055

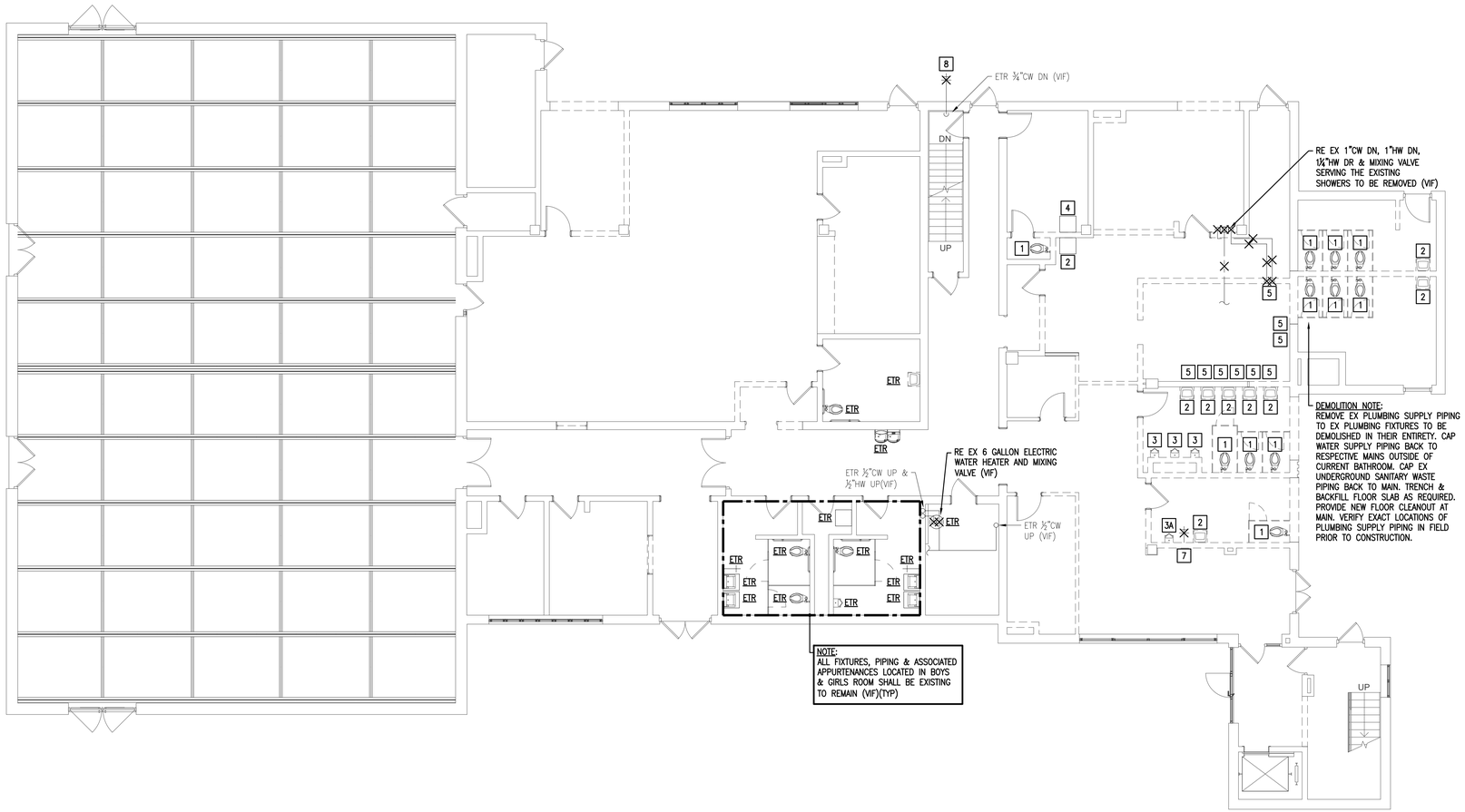


1 PD1.02 FIRST FLOOR DEMOLITION PLAN - DOMESTIC WATER

1/8" = 1'-0"

## PLUMBING DEMO KEY NOTES

1. REMOVE AND DISCARD EXISTING FLOOR MOUNTED WATER CLOSET AND FLUSH VALVE. CUT AND CAP EXISTING COLD WATER SUPPLY AND SANITARY WASTE AND VENT LINES BACK TO EXISTING RESPECTIVE MAIN LINES.
2. REMOVE AND DISCARD EXISTING WALL HUNG LAVATORY & FAUCET. CUT AND CAP EXISTING HOT & COLD WATER SUPPLY AND WASTE & VENT LINES BACK TO EXISTING RESPECTIVE MAIN LINES.
3. REMOVE AND DISCARD EXISTING WALL MOUNTED URINAL, CARRIER AND FLUSH VALVE. CUT AND CAP EXISTING COLD WATER SUPPLY AND WASTE & VENT LINES BACK TO EXISTING RESPECTIVE MAIN LINES.
3A. REMOVE AND DISCARD EXISTING FLOOR MOUNTED URINAL AND FLUSH VALVE. CUT AND CAP EXISTING COLD WATER SUPPLY AND WASTE & VENT LINES BACK TO EXISTING RESPECTIVE MAIN LINES.
4. REMOVE AND DISCARD EXISTING COUNTER MOUNTED SINK & FAUCET. CUT AND CAP EXISTING HOT & COLD WATER SUPPLY AND WASTE & VENT LINES BACK TO EXISTING RESPECTIVE MAIN LINES.
5. REMOVE AND DISCARD EXISTING SHOWER. CUT AND CAP EXISTING HOT & COLD WATER SUPPLY AND WASTE & VENT LINES BACK TO EXISTING RESPECTIVE MAIN LINES.
5A. REMOVE AND DISCARD EXISTING SHOWER ENCLOSURE & FAUCET. CUT AND CAP EXISTING HOT & COLD WATER SUPPLY AND SANITARY WASTE & VENT LINES BACK TO EXISTING RESPECTIVE MAIN LINES.
6. REMOVE AND DISCARD EXISTING FLOOR DRAIN. CUT AND CAP EXISTING WASTE & VENT LINES BACK TO EXISTING RESPECTIVE MAINS.
7. REMOVE AND DISCARD EXISTING HOSE BIBB. CUT AND CAP EXISTING CW LINE BACK TO EXISTING RESPECTIVE MAIN.
8. REMOVE AND DISCARD EXISTING EXTERIOR WALL MOUNTED WALL HYDRANT. CUT AND CAP EXISTING CW LINE BACK TO EXISTING RESPECTIVE MAIN.

NOTES:
1. COORDINATE EXISTING PLUMBING FIXTURES AND EQUIPMENT PRIOR TO REMOVAL. SALVAGE ANY EXISTING PLUMBING FIXTURES & EQUIPMENT AS REQUIRED AND RETURN TO THE OWNER.
2. VERIFY EXACT LOCATIONS OF ALL ABOVE AND BELOW GROUND DOMESTIC WATER, SANITARY WASTE & VENT, STORM DRAINAGE AND NATURAL GAS SUPPLY & MAIN PIPING IN FIELD.

# JOSLIN RECREATION CENTER - CPF RENOVATION

17 Hyatt St., Providence, RI 2909

Owner:
City of Providence, Dept. of Public Property
25 Dorrance Street
Providence, Rhode Island 02903


ROWSE Architects
400 Massasoit Avenue
Suite 300, Second Floor
East Providence, Rhode Island
p. (401) 331-9200

2 Hampshire Street
Suite 106, First Floor
Foxboro, Massachusetts
p. (774) 215-0290
rowse@rowsearchitects.com



OWNERSHIP AND USE OF DOCUMENTS, DRAWINGS AND SPECIFICATIONS AS INSTRUMENTS OF PROFESSIONAL SERVICE, ARE, AND SHALL REMAIN, THE PROPERTY OF THE ARCHITECT. THESE DOCUMENTS ARE NOT TO BE USED, IN WHOLE OR IN PART, FOR ANY OTHER PROJECTS OR PURPOSES, OR BY ANY OTHER PARTIES THAN THOSE PROPERLY AUTHORIZED BY CONTRACT WITHOUT THE EXPRESS AUTHORIZATION OF THE ARCHITECT.



B|E|R
BUILDING ENGINEERING RESOURCES, INC.
66 Main Street
N. Easton, MA 02356
T 508.230.0260
F 508.230.0265

Office Commons 95
351 Centerville Road
Warwick, RI 02886
T 401.384.7682

ber@ber-engineering.com
www.ber-engineering.com


## GENERAL NOTES

1. CONTRACTOR SHALL VISIT SITE, PRIOR TO BID, AND CAREFULLY INVESTIGATE AND EXAMINE THE AREA OF WORK SO AS TO SATISFY HIMSELF AS TO THE NATURE AND LOCATION OF THE WORK. CONTRACTOR TO NOTE THE CHARACTER, QUALITY, QUANTITIES OF MATERIALS REQUIRED AND DIFFICULTIES TO BE ENCOUNTERED. THE KIND AND EXTENT OF EQUIPMENT AND FACILITIES NEEDED FOR PERFORMANCE OF THE WORK AND OTHER ITEMS WHICH MAY, IN ANY WAY, AFFECT THE WORK OR CONTRACTOR'S PERFORMANCE.
2. DRAWINGS DO NOT INCLUDE NECESSARY COMPONENTS FOR CONSTRUCTION SAFETY.

**Date:** 05/05/2025
**Drawn by:** AG **Proj. Mgr.:** ARV

**Revisions**

| No. | Date | Description |
|---|---|---|
| | | |
| | | |
| | | |
| | | |
| | | |
| | | |
| | | |

PLUMBING
FIRST FLOOR DEMOLITION
PLAN - DOMESTIC WATER

# PD1.02



BERX 24006

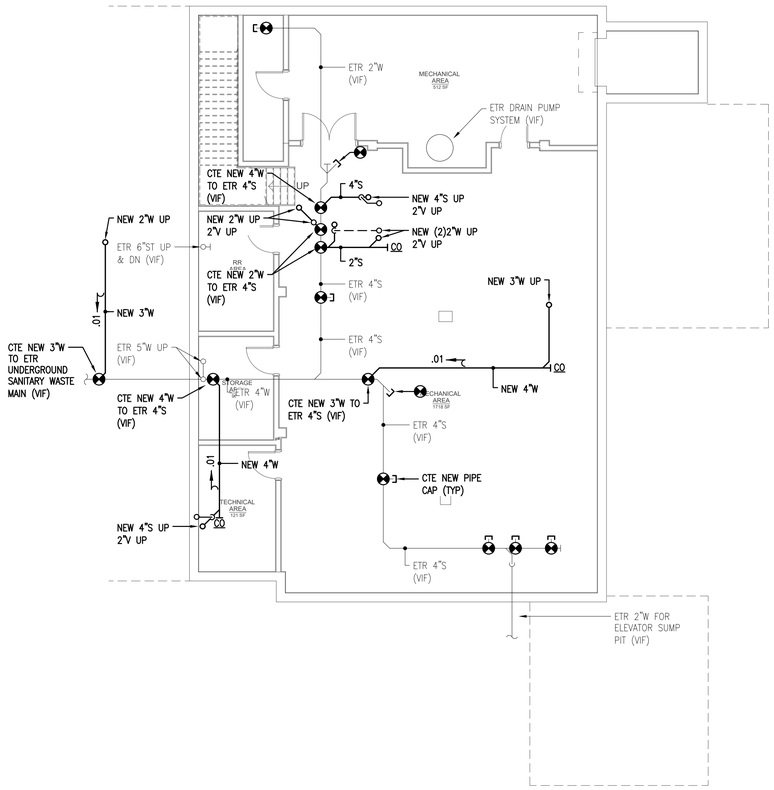


1 P1.00 BASEMENT PLAN - SANITARY, WASTE, VENT, & STORM

1/8" = 1'-0"

NOTE:
ALL EXISTING SUPPLY PIPING, PUMPS & EQUIPMENT SERVICE THE REMOVED POOL SHALL BE REMOVED IN ITS ENTIRETY. ALL PIPING & VALVES SERVICNG THE EXITSING TO REMAIN SPALSH PAD SHALL BE EXISTING TO REMAIN (VIF)

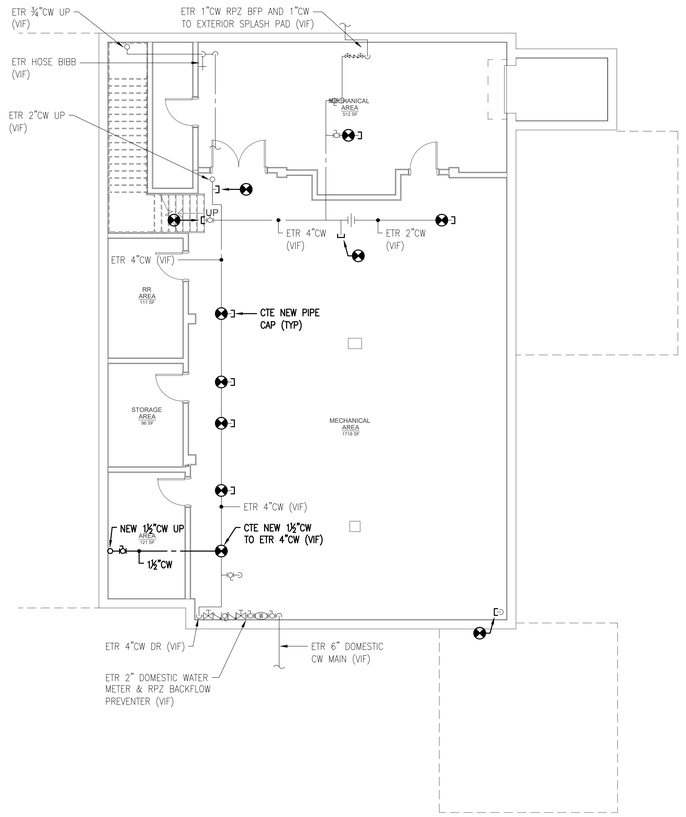


2 P1.00 BASEMENT PLAN - DOMESTIC WATER & GAS

1/8" = 1'-0"

# JOSLIN RECREATION CENTER - CPF RENOVATION

17 Hyatt St., Providence, RI 2909

Owner:
City of Providence, Dept. of Public Property
25 Dorrance Street
Providence, Rhode Island 02903


ROWSE Architects
400 Massasoit Avenue
Suite 300, Second Floor
East Providence, Rhode Island
p. (401) 331-9200

2 Hampshire Street
Suite 106, First Floor
Foxboro, Massachusetts
p. (774) 215-0290

rowse@rowsearchitects.com



OWNERSHIP AND USE OF DOCUMENTS, DRAWINGS AND SPECIFICATIONS AS INSTRUMENTS OF PROFESSIONAL SERVICE, ARE, AND SHALL REMAIN, THE PROPERTY OF THE ARCHITECT. THESE DOCUMENTS ARE NOT TO BE USED, IN WHOLE OR IN PART, FOR ANY OTHER PROJECTS OR PURPOSES, OR BY ANY OTHER PARTIES THAN THOSE PROPERLY AUTHORIZED BY CONTRACT WITHOUT THE EXPRESS AUTHORIZATION OF THE ARCHITECT.



B|E|R
BUILDING ENGINEERING RESOURCES, INC.
66 Main Street
N. Easton, MA 02356
T 508.230.0260
F 508.230.0265
ber@ber-engineering.com
Office Commons 95
351 Centerville Road
Warwick, RI 02886
T 401.384.7682
www.ber-engineering.com


## GENERAL NOTES

1. CONTRACTOR SHALL VISIT SITE, PRIOR TO BID, AND CAREFULLY INVESTIGATE AND EXAMINE THE AREA OF WORK SO AS TO SATISFY HIMSELF AS TO THE NATURE AND LOCATION OF THE WORK. CONTRACTOR TO NOTE THE CHARACTER, QUALITY, QUANTITIES OF MATERIALS REQUIRED AND DIFFICULTIES TO BE ENCOUNTERED, THE KIND AND EXTENT OF EQUIPMENT AND FACILITIES NEEDED FOR PERFORMANCE OF THE WORK AND OTHER ITEMS WHICH MAY, IN ANY WAY, AFFECT THE WORK OR CONTRACTOR'S PERFORMANCE.

2. DRAWINGS DO NOT INCLUDE NECESSARY COMPONENTS FOR CONSTRUCTION SAFETY.

**Date:** 05/05/2025

**Drawn by:** AG **Proj. Mgr.:** ARV

**Revisions**

| No. | Date | Description |
|---|---|---|
| | | |

PLUMBING
BASEMENT FLOOR PLANS

# P1.00

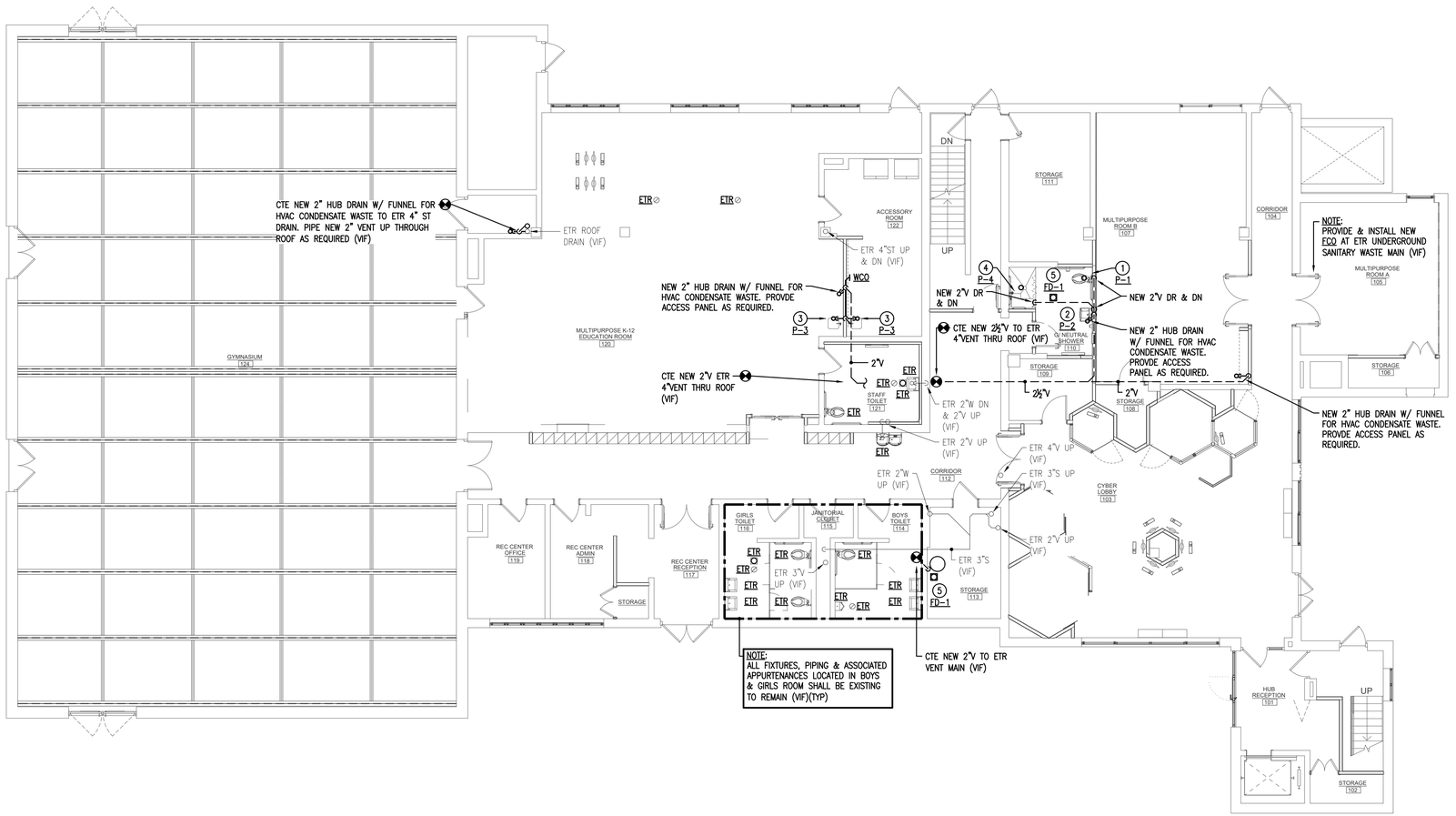


1 / P1.01 FIRST FLOOR PLAN - SANITARY, WASTE, VENT, & STORM

1/8" = 1'-0"

## PLUMBING KEY NOTES

1. NEW FLOOR MOUNTED WATERCLOSET W/ FLUSH VALVE: 1"CW DR, 4"S DN & 2"V DR
2. NEW WALL HUNG LAVATORY & FAUCET: 1/2"CW DR, 1/2"HW DR, 1½"W DN, 1½"V DR
3. NEW COUNTER MOUNTED SINK & FAUCET: 1/2"CW DR, 1/2"HW DR, 2"W DN, 1½"V DR
4. NEW SHOWER ENCLOSURE & VALVE SYSTEM: 1/2"CW DR, 1/2"HW DR, 2"W DN, 1½"V DR
5. NEW 2" FLOOR DRAIN: 2"W DN, 2"V DN
6. NEW 4" FLOOR DRAIN: 4"W DN, 2"V DN
7. NEW WALL MOUNTED HOSE BIBB: 3/4"CW DR
8. NEW EXTERIOR WALL HYDRANT: 3/4"CW DR
9. NEW 50 GALLON ELECTRIC WATER HEATER: 1"CW DR, 1"HW DR, ¾"W
10. NEW THERMOSTATIC MIXING VALVE: 1"CW DR, 1"HW(140°F) DR, 1"HW(120°F) DR, ¾"HWR DR

NOTE:
CONNECT ALL DOMESTIC WATER, SANITARY WASTE & VENT AND NATURAL GAS SUPPLY PIPING FROM NEW FIXTURES & EQUIPMENT TO RESPECTIVE MAIN LINES. COORDINATE EXACT LOCATIONS IN FIELD PRIOR TO INSTALLATION. TRENCH PIPING AS REQUIRED.

# JOSLIN RECREATION CENTER - CPF RENOVATION

17 Hyatt St., Providence, RI 2909

Owner:
City of Providence, Dept. of Public Property
25 Dorrance Street
Providence, Rhode Island 02903


ROWSE Architects
400 Massasoit Avenue
Suite 300, Second Floor
East Providence, Rhode Island
p. (401) 331-9200

2 Hampshire Street
Suite 106, First Floor
Foxboro, Massachusetts
p. (774) 215-0290
rowse@rowsearchitects.com



OWNERSHIP AND USE OF DOCUMENTS, DRAWINGS AND SPECIFICATIONS AS INSTRUMENTS OF PROFESSIONAL SERVICE, ARE, AND SHALL REMAIN, THE PROPERTY OF THE ARCHITECT. THESE DOCUMENTS ARE NOT TO BE USED, IN WHOLE OR IN PART, FOR ANY OTHER PROJECTS OR PURPOSES, OR BY ANY OTHER PARTIES THAN THOSE PROPERLY AUTHORIZED BY CONTRACT WITHOUT THE EXPRESS AUTHORIZATION OF THE ARCHITECT.



B|E|R
BUILDING ENGINEERING RESOURCES, INC.
66 Main Street
N. Easton, MA 02356
T 508.230.0260
F 508.230.0265
ber@ber-engineering.com

Office Commons 95
351 Centerville Road
Warwick, RI 02886
T 401.384.7682
www.ber-engineering.com


## GENERAL NOTES

1. CONTRACTOR SHALL VISIT SITE, PRIOR TO BID, AND CAREFULLY INVESTIGATE AND EXAMINE THE AREA OF WORK SO AS TO SATISFY HIMSELF AS TO THE NATURE AND LOCATION OF THE WORK. CONTRACTOR TO NOTE THE CHARACTER, QUALITY, QUANTITIES OF MATERIALS REQUIRED AND DIFFICULTIES TO BE ENCOUNTERED. THE KIND AND EXTENT OF EQUIPMENT AND FACILITIES NEEDED FOR PERFORMANCE OF THE WORK AND OTHER ITEMS WHICH MAY, IN ANY WAY, AFFECT THE WORK OR CONTRACTOR'S PERFORMANCE.
2. DRAWINGS DO NOT INCLUDE NECESSARY COMPONENTS FOR CONSTRUCTION SAFETY.

**Date:** 05/05/2025
**Drawn by:** AG **Proj. Mgr.:** ARV

**Revisions**

| No. | Date | Description |
|---|---|---|
| | | |
| | | |
| | | |
| | | |
| | | |
| | | |
| | | |
| | | |

PLUMBING
FIRST FLOOR PLAN - SANITARY, WASTE, VENT & STORM

# P1.01

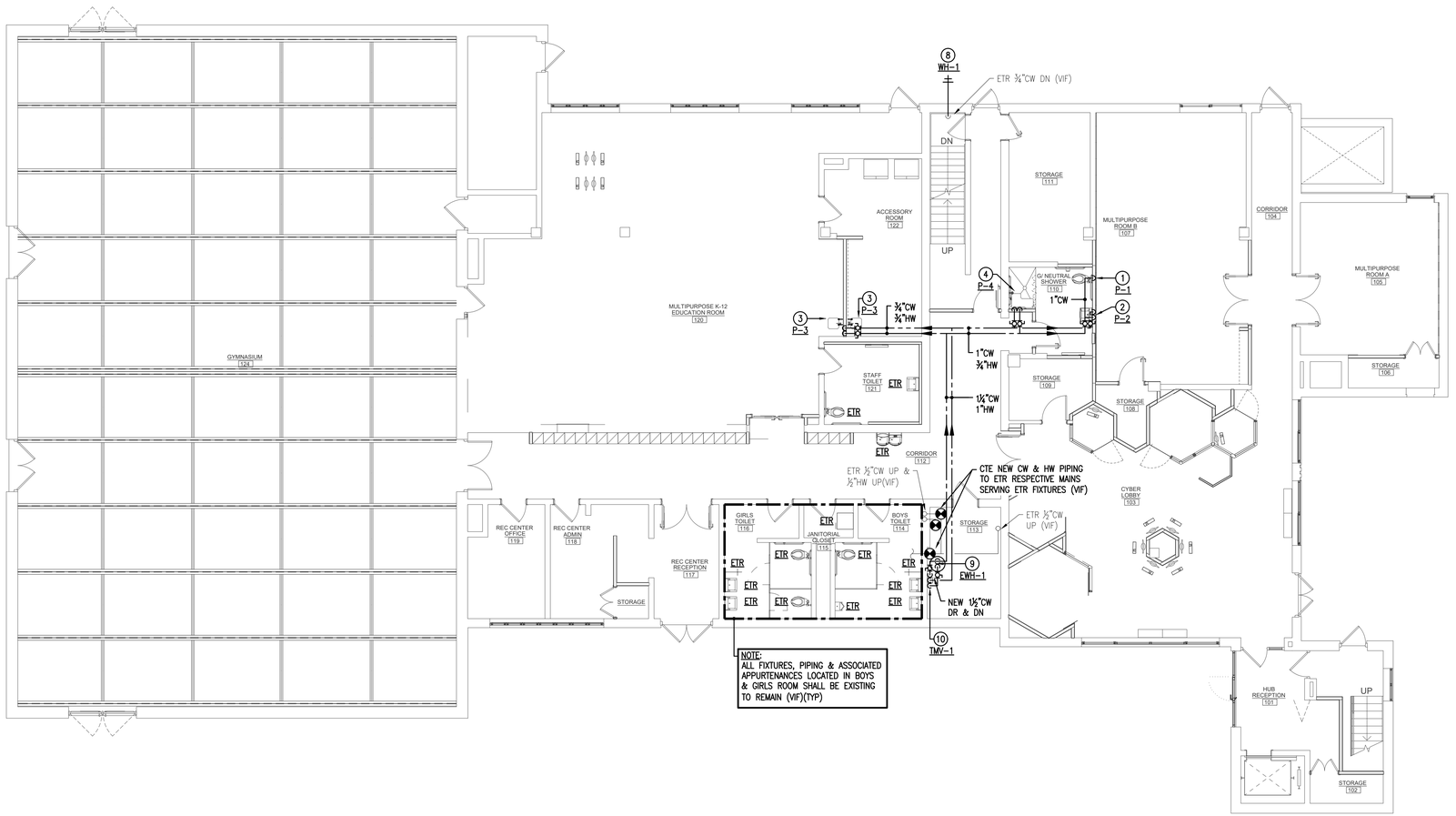


1 / P1.02 FIRST FLOOR PLAN - DOMESTIC WATER

1/8" = 1'-0"

## PLUMBING KEY NOTES

1. NEW FLOOR MOUNTED WATERCLOSET W/ FLUSH VALVE: 1"CW DR, 4"S DN & 2"V DR
2. NEW WALL HUNG LAVATORY & FAUCET: 1/2"CW DR, 1/2"HW DR, 1½"W DN, 1½"V DR
3. NEW COUNTER MOUNTED SINK & FAUCET: 1/2"CW DR, 1/2"HW DR, 2"W DN, 1½"V DR
4. NEW SHOWER ENCLOSURE & VALVE SYSTEM: 1/2"CW DR, 1/2"HW DR, 2"W DN, 1½"V DR
5. NEW 2" FLOOR DRAIN: 2"W DN, 2"V DN
6. NEW 4" FLOOR DRAIN: 4"W DN, 2"V DN
7. NEW WALL MOUNTED HOSE BIBB: 3/4"CW DR
8. NEW EXTERIOR WALL HYDRANT: 3/4"CW DR
9. NEW 50 GALLON ELECTRIC WATER HEATER: 1"CW DR, 1"HW DR, ¾"W
10. NEW THERMOSTATIC MIXING VALVE: 1"CW DR, 1"HW(140°F) DR, 1"HW(120°F) DR, ¾"HWR DR

NOTE:
CONNECT ALL DOMESTIC WATER, SANITARY WASTE & VENT AND NATURAL GAS SUPPLY PIPING FROM NEW FIXTURES & EQUIPMENT TO RESPECTIVE MAIN LINES. COORDINATE EXACT LOCATIONS IN FIELD PRIOR TO INSTALLATION. TRENCH PIPING AS REQUIRED.

# JOSLIN RECREATION CENTER - CPF RENOVATION

17 Hyatt St., Providence, RI 2909

Owner:
City of Providence, Dept. of Public Property
25 Dorrance Street
Providence, Rhode Island 02903


ROWSE Architects
400 Massasoit Avenue
Suite 300, Second Floor
East Providence, Rhode Island
p. (401) 331-9200

2 Hampshire Street
Suite 106, First Floor
Foxboro, Massachusetts
p. (774) 215-0290

rowse@rowsearchitects.com



OWNERSHIP AND USE OF DOCUMENTS, DRAWINGS AND SPECIFICATIONS AS INSTRUMENTS OF PROFESSIONAL SERVICE, ARE, AND SHALL REMAIN, THE PROPERTY OF THE ARCHITECT. THESE DOCUMENTS ARE NOT TO BE USED, IN WHOLE OR IN PART, FOR ANY OTHER PROJECTS OR PURPOSES, OR BY ANY OTHER PARTIES THAN THOSE PROPERLY AUTHORIZED BY CONTRACT WITHOUT THE EXPRESS AUTHORIZATION OF THE ARCHITECT.



B|E|R
BUILDING ENGINEERING RESOURCES, INC.
66 Main Street
N. Easton, MA 02356
T 508.230.0260
F 508.230.0265
ber@ber-engineering.com

Office Commons 95
351 Centerville Road
Warwick, RI 02886
T 401.384.7682
www.ber-engineering.com


## GENERAL NOTES

1. CONTRACTOR SHALL VISIT SITE, PRIOR TO BID, AND CAREFULLY INVESTIGATE AND EXAMINE THE AREA OF WORK SO AS TO SATISFY HIMSELF AS TO THE NATURE AND LOCATION OF THE WORK. CONTRACTOR TO NOTE THE CHARACTER, QUALITY, QUANTITIES OF MATERIALS REQUIRED AND DIFFICULTIES TO BE ENCOUNTERED. THE KIND AND EXTENT OF EQUIPMENT AND FACILITIES NEEDED FOR PERFORMANCE OF THE WORK AND OTHER ITEMS WHICH MAY, IN ANY WAY, AFFECT THE WORK OR CONTRACTOR'S PERFORMANCE.
2. DRAWINGS DO NOT INCLUDE NECESSARY COMPONENTS FOR CONSTRUCTION SAFETY.

**Date:** 05/05/2025

**Drawn by:** AG **Proj. Mgr.:** ARV

**Revisions**

| No. | Date | Description |
|---|---|---|
| | | |
| | | |
| | | |
| | | |
| | | |
| | | |
| | | |

PLUMBING
FIRST FLOOR PLAN - DOMESTIC WATER

# P1.02



BER# 24005

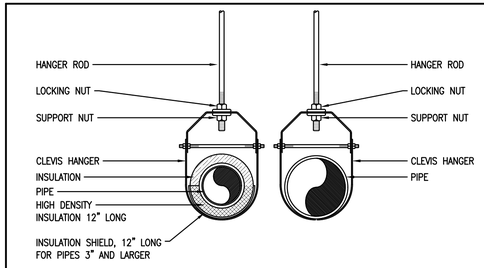


| HANGER ROD SCHEDULE | |
|---|---|
| PIPE SIZE | ROD SIZE |
| UP TO 2" | 3/8" DIA. |
| 2 1/2" THRU 3" | 1/2" DIA. |
| 4" AND 5" | 5/8" |
| 6" – 8" | 3/4" |
| 10 & 12" | 7/8" |
| | |

| HANGER ROD SPACING | |
|---|---|
| PIPE SIZE | MAX. ALLOWABLE SPACING |
| 1" | 7' |
| 1 1/4" | 8' |
| 1 1/2" | 9' |
| 2" | 10' |
| 2 1/2" | 11' |
| 3" – 12" | 12' |

INSULATED AND NON INSULATED PLUMBING SYSTEMS

1 CLEVIS PIPE HANGER/ROD INSTALLATION NTS

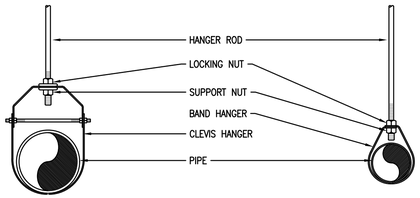


5-INCH AND LARGER

4-INCH AND SMALLER

| HANGER ROD SCHEDULE | |
|---|---|
| PIPE SIZE | ROD SIZE |
| UP TO 2" | 3/8" DIA. |
| 2 1/2" & 3" | 1/2" DIA. |
| 4" AND 5" | 5/8" |
| 6" – 8" | 3/4" |
| 10 & 12" | 7/8" |
| | |

| HANGER ROD SPACING | |
|---|---|
| PIPE SIZE | MAX. ALLOWABLE SPACING |
| 1" | 7' |
| 1 1/4" | 8' |
| 1 1/2" | 9' |
| 2" | 10' |
| 2 1/2" | 11' |
| 3" – 12" | 12' |

2 CLEVIS-BAND HANGER/ROD INSTALLATION NTS

NOTE:
FIRESTOP SEALANTS AND PIPING PENETRATIONS THROUGH FIRE RATED ASSEMBLIES SHALL COMPLY WITH THE UL FIRE RESISTANCE DIRECTORY.

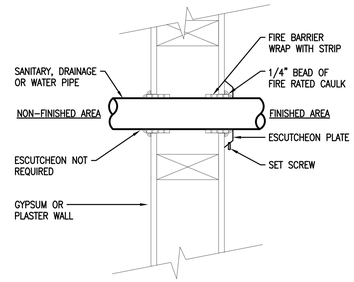


3 STUD WALL FIRE RATED SLEEVE NTS

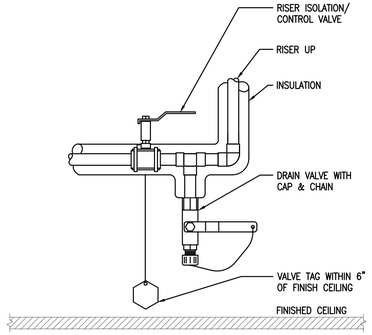


4 BASE OF WATER RISER CONTROL NTS

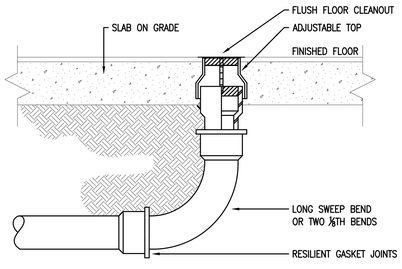


NOTE:
REFER TO CONTRACT SPECIFICATIONS FOR CLEANOUT TYPE

5 END OF RUN FCO INSTALLATION NTS

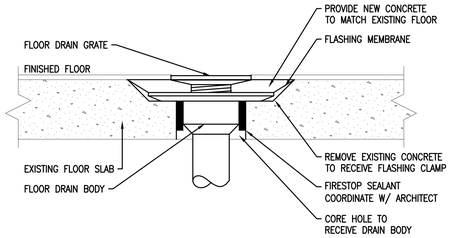


6 FLOOR DRAIN INSTALLATION - EXISTING SLAB NTS

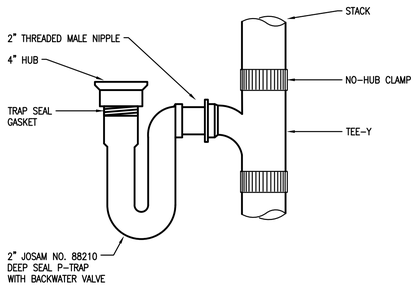


NOTE:
TRAP TO BE INSTALLED ABOVE CEILING. PROVIDE ACCESS PANEL AS REQUIRED.

7 HUB DRAIN DIAGRAM NTS

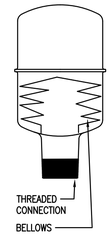


SPECIFICATIONS & NOTES

1. ALL H & CW PIPING, FIXTURES & EQUIPMENT SHALL BE PROTECTED FROM WATER HAMMER EITHER BELLOWS TYPE; HAMMER ARRESTORS OR SHOCK ARRESTORS.
2. ARRESTORS SHALL BE LOCATED IN AN ACCESSIBLE LOCATIONS. PROVIDE RATED ACCESS PANELS WHERE REQ'D.
3. ALL BRANCH PIPING SUPPLYING FLUSH VALVES SHALL BE PROTECTED BY BELLOWS TYPE SHOCK ARRESTORS MANUFACTURED BY ZURN, J.R. SMITH, AMTROL OR WADE.
4. LOCATE & SIZE BELLOWS TYPE SHOCK ARRESTORS AS PER SELECTED MANUFACTURER'S & PDI-WH201 RECOMMENDATIONS.
5. SUBMIT FOR APPROVAL; MANUFACTURERS DATA, SIZE AND LOCATIONS.

| ZURN SHOKTROL Z-1700 SERIES OR APPROVED EQUAL. | 100 | 200 | 300 | 400 |
|---|---|---|---|---|
| P.D.I. UNITS | A | B | C | D |
| W.S.F.U.'S | 1-11 | 12-32 | 33-60 | 61-113 |

8 SHOCK/HAMMER ARRESTOR DETAIL NTS

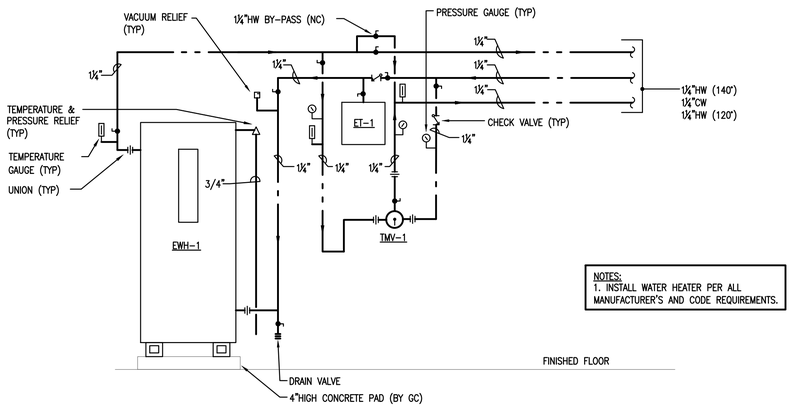


NOTES:
1. INSTALL WATER HEATER PER ALL MANUFACTURER'S AND CODE REQUIREMENTS.

9 ELECTRIC WATER HEATER DIAGRAM NTS

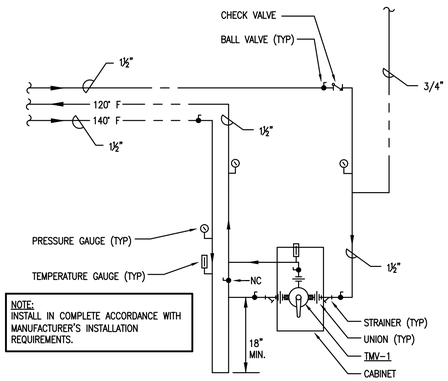


NOTE:
INSTALL IN COMPLETE ACCORDANCE WITH MANUFACTURER'S INSTALLATION REQUIREMENTS.

10 THERMOSTATIC MIXING VALVE ASSEMBLY NTS

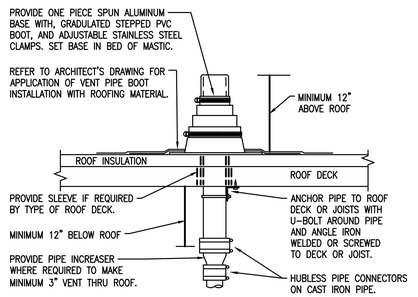


NOTE:
REFER TO PLANS FOR VTR PIPE SIZES AND LOCATIONS. LOCATE VENT THRU ROOF MINIMUM TEN FEET HORIZONTAL OR THREE FEET VERTICAL ABOVE ANY BUILDING OPENING OR FRESH AIR INTAKE, AND ONE FOOT FROM ANY VERTICAL SURFACE. PROVIDE 1" FIBERGLASS INSULATION WITH ALL-SERVICE JACKET ON VENT PIPE INSIDE BUILDING WITHIN SIX FEET OF VENT THRU ROOF LOCATION. VERIFY FLASHING AND COUNTER FLASHING WITH ROOFING CONTRACTOR.

11 VENT THRU ROOF DETAIL NTS

# JOSLIN RECREATION CENTER - CPF RENOVATION

17 Hyatt St., Providence, RI 2909

Owner:
City of Providence, Dept. of Public Property
25 Dorrance Street
Providence, Rhode Island 02903


ROWSE Architects
400 Massasoit Avenue
Suite 300, Second Floor
East Providence, Rhode Island
p. (401) 331-9200

2 Hampshire Street
Suite 106, First Floor
Foxboro, Massachusetts
p. (774) 215-0290
rowse@rowsearchitects.com



OWNERSHIP AND USE OF DOCUMENTS, DRAWINGS AND SPECIFICATIONS AS INSTRUMENTS OF PROFESSIONAL SERVICE, ARE, AND SHALL REMAIN, THE PROPERTY OF THE ARCHITECT. THESE DOCUMENTS ARE NOT TO BE USED, IN WHOLE OR IN PART, FOR ANY OTHER PROJECTS OR PURPOSES, OR BY ANY OTHER PARTIES THAN THOSE PROPERLY AUTHORIZED BY CONTRACT WITHOUT THE EXPRESS AUTHORIZATION OF THE ARCHITECT.



BUILDING ENGINEERING RESOURCES, INC.
66 Main Street
N. Easton, MA 02356
T 508.230.0260
F 508.230.0265
ber@ber-engineering.com

Office Commons 95
351 Centerville Road
Warwick, RI 02886
T 401.384.7682
www.ber-engineering.com


## GENERAL NOTES

1. CONTRACTOR SHALL VISIT SITE, PRIOR TO BID, AND CAREFULLY INVESTIGATE AND EXAMINE THE AREA OF WORK SO AS TO SATISFY HIMSELF AS TO THE NATURE AND LOCATION OF THE WORK. CONTRACTOR TO NOTE THE CHARACTER, QUALITY, QUANTITIES OF MATERIALS REQUIRED AND DIFFICULTIES TO BE ENCOUNTERED. THE KIND AND EXTENT OF EQUIPMENT AND FACILITIES NEEDED FOR PERFORMANCE OF THE WORK AND OTHER ITEMS WHICH MAY, IN ANY WAY, AFFECT THE WORK OR CONTRACTOR'S PERFORMANCE.
2. DRAWINGS DO NOT INCLUDE NECESSARY COMPONENTS FOR CONSTRUCTION SAFETY.

**Date:** 05/05/2025
**Drawn by:** AG **Proj. Mgr.:** ARV
**Revisions**

| No. | Date | Description |
|---|---|---|
| | | |
| | | |
| | | |
| | | |
| | | |
| | | |
| | | |

PLUMBING DETAILS

# P2.00



BLKF 24"x36"

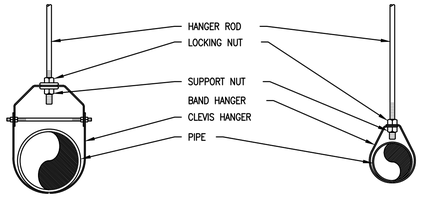


4-INCH AND LARGER



3" AND SMALLER

| HANGER ROD SCHEDULE | |
|---|---|
| PIPE SIZE | ROD SIZE |
| UP TO 2" | 3/8" DIA. |
| 2 1/2" & 3" | 1/2" DIA. |
| 4" AND 5" | 5/8" |
| 6" – 8" | 3/4" |
| 10 & 12" | 7/8" |
| | |

| HANGER ROD SPACING | |
|---|---|
| PIPE SIZE | MAX. ALLOWABLE SPACING |
| 1" | 7' |
| 1 1/4" | 8' |
| 1 1/2" | 9' |
| 2" | 10' |
| 2 1/2" | 11' |
| 3" – 12" | 12' |

FIRE PROTECTION SYSTEMS

1 TYPICAL PIPE HANGER DIAGRAM NTS

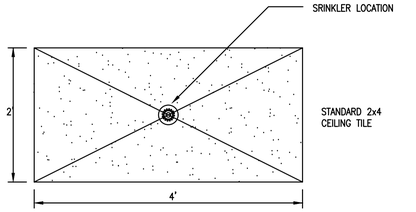


NOTE:
REFER TO SPECIFICATION SECTION 210000 FOR SPRINKLER TYPES AND LOCATION REQUIREMENTS.

2 SPRINKLER LOCATION IN CEILING TILES NTS

## FIRE PROTECTION DEMOLITION NOTES:

1. PRIOR TO SUBMITTING DEMOLITION BID, THE CONTRACTOR SHALL VISIT THE PROJECT SITE TO BECOME FAMILIAR WITH ALL EXISTING CONDITIONS AND TO DETERMINE THE EXTENT OF WORK TO REMOVE THE EXISTING SPRINKLER SYSTEM COMPLETELY. IF DISCREPANCIES EXIST BETWEEN DRAWINGS AND/OR SITE CONDITIONS, THE FIRE PROTECTION DEMOLITION CONTRACTOR SHALL NOTIFY THE ARCHITECT/ENGINEER AND THE OWNER PRIOR TO SIGNING OF CONTRACT. REQUESTS FOR COMPENSATION FOR EXTRA WORK, WHICH WOULD HAVE BEEN EVIDENT BY COMPLIANCE WITH THE PREVIOUS STATEMENT, WILL NOT BE CONSIDERED.
2. DISCONNECT, DISMANTLE AND DEMOLISH EXISTING SPRINKLERS, BRANCH PIPING AND ACCESSORIES IN AREA OF WORK. REMOVE ALL DEBRIS AND DISCONNECTED EQUIPMENT AND CLEAN OUT EXISTING SPACES. EXISTING SPRINKLERS SYSTEM TO REMAIN IN OCCUPIED FLOORS AND EXISTING STAIRWELLS. REFER TO ARCHITECTURAL AND FIRE PROTECTION DEMOLITION PLANS FOR DEMOLITION WORK.
3. REMOVE ALL EXISTING SPRINKLER SYSTEM SUPPLY PIPING, SPRINKLERS, ACCESSORIES INDICATED TO BE DEMOLISHED AND CAP BACK TO EXISTING MAIN LINES TO REMAIN. OBTAIN EXISTING RECORD DRAWINGS FROM OWNER. MAINTAIN EXISTING SPRINKLER SYSTEMS, STANDPIPE RISERS AND HOSE VALVES IN EACH FLOOR LEVEL TO REMAIN.
4. VERIFY PIPING SERVES ONLY SPRINKLER SYSTEMS INDICATED FOR DEMOLITION BEFORE SHUT-DOWN FOR DISCONNECTION. IDENTIFY EXISTING PIPING WHICH SERVES SPRINKLER SYSTEMS TO REMAIN DURING PHASING. PROMPTLY NOTIFY ARCHITECT/ENGINEER & GENERAL CONTRACTOR OF ACTIVE PIPING TO BE MAINTAINED WHEN LOCATED IN PARTITIONS TO BE DEMOLISHED.
5. COORDINATE ALL SHUT-DOWNS, TIE-INS, ETC., WITH THE GENERAL CONTRACTOR. ELECTRICAL MAKE-SAFE OF SPRINKLER SYSTEM EQUIPMENT REQUIRING DEMOLITION SHALL BE COMPLETED BY THE ELECTRICAL SUBCONTRACTOR.
6. DEMOLITION SUBCONTRACTOR MUST PROTECT EXISTING SLAB, WALL, FENCING AND BUILDING STRUCTURE DURING DEMOLITION PHASE. DAMAGE TO EXISTING STRUCTURE SHALL BE REPAIRED AT DEMOLITION SUBCONTRACTOR'S EXPENSE.
7. ALL DEMOLITION WORK PERFORMED SHALL BE DONE IN ACCORDANCE WITH THE APPLICABLE NATIONAL, STATE AND LOCAL CODES, LAWS AND ORDINANCES.

## FIRE PROTECTION GENERAL NOTES:

1. THE WORK COVERED CONSISTS OF FURNISHING ALL LABOR AND MATERIALS NECESSARY TO INSTALL, COMPLETE AND READY FOR CONTINUOUS OPERATION, THE FIRE PROTECTION SYSTEMS, APPARATUS AND EQUIPMENT FOR THIS PROJECT. AS SHOWN ON DRAWING, PLUS AS REQUIRED BY NFPA-13, NFPA-14 AND NFPA-20 AS REFERENCED IN THE STATE & LOCAL BUILDING & FIRE CODES AND THE AUTHORITY HAVING JURISDICTION.
2. ALL EQUIPMENT AND MATERIALS FURNISHED UNDER THE FIRE PROTECTION SUBCONTRACT, LABOR AND TESTING PERFORMED HEREIN SHALL BE IN COMPLETE ACCORDANCE WITH THE STATE & LOCAL BUILDING & FIRE CODES.
3. ANY AND ALL PERMITS REQUIRED FOR INSTALLATION OF ANY MATERIAL SHALL BE OBTAINED AS PART OF THE WORK INCLUDING ALL FEES OR EXPENSES INCURRED.
4. THESE DRAWINGS ARE DIAGRAMMATIC AND ARE NOT INTENDED TO SHOW EACH AND EVERY OFFSET WITH REGARD TO THE PIPING THAT IS TO BE INSTALLED. THE CONTRACTOR SHALL VISIT THE SITE, READ ALL DRAWINGS, AND MAKE DETAILED NOTES OF ALL NECESSARY OFFSETS REQUIRED WITH THE INSTALLATION OF THEIR WORK. NO EXTRA PAYMENT WILL BE ALLOWED FOR ADDITIONAL WORK CAUSED BY UNFAMILIARITY WITH SITE AND PROJECT CONDITIONS.
5. UNLESS OTHERWISE NOTED, IT IS THE INTENT OF THESE DOCUMENTS THAT THIS AREA SHALL BE 100% SPRINKLERED.
6. ALL SPRINKLERS PROTECTING LIGHT HAZARD AREAS SHALL BE QUICK RESPONSE.
7. THE FIRE PROTECTION CONTRACTOR IS RESPONSIBLE TO PROVIDE A COMPLETE SET OF SHOP DRAWINGS AND HYDRAULIC CALCULATIONS WHICH SHALL BEAR THE SEAL OF A FIRE PROTECTION ENGINEER DULY LICENSED IN THE STATE WHERE WORK IS PERFORMED.
8. THE SPRINKLER CONTRACTOR SHALL PERFORM A HYDRANT FLOW TEST AND SHALL BASE THEIR HYDRAULIC CALCULATIONS ON THEIR TEST RESULTS.
9. THE SPRINKLER CONTRACTOR SHALL PREPARE THEIR OWN FABRICATION/WORKING DRAWINGS OF THE SPRINKLER WORK AND OBTAIN APPROVALS FROM AUTHORITIES HAVING JURISDICTION PRIOR TO INSTALLATION, AND SUBMIT TO THE ARCHITECT/ENGINEER FOR APPROVAL.
10. SPRINKLERS SHALL BE LOCATED ABOVE AND BELOW ALL DUCTWORK GREATER THAN 4'-0" WIDE.
11. ROUTING OF SPRINKLER MAINS, BRANCHES AND SPRINKLERS SHALL BE THOROUGHLY COORDINATED WITH OTHER TRADES AND BUILDING STRUCTURE PRIOR TO SUBMISSION OF COORDINATED SHOP DRAWINGS. FIRE PROTECTION CONTRACTOR IS RESPONSIBLE FOR COORDINATING, PREPARING, AND SUBMITTING COORDINATION DRAWINGS FOR APPROVAL.
12. ALL SLEEVES THROUGH CONCRETE FLOORS AND FIRE RATED WALLS OR PARTITIONS SHALL BE FIRE STOPPED WITH UL RATED ASSEMBLIES OF EQUAL FIRE RATING.
13. THE FIRE PROTECTION CONTRACTOR SHALL BE RESPONSIBLE FOR THE REMOVAL, STORAGE AND CUTTING OF ANY CEILING TILES TO ACCOMMODATE SPRINKLERS. THEY SHALL ALSO REINSTALL THE CEILING TILES AND REPLACE ANY DAMAGED TILES.
14. SPRINKLERS IN AREAS WITH NO FINISHED CEILING SHALL BE LOCATED AS HIGH AS POSSIBLE. SPRINKLERS SUBJECT TO PHYSICAL DAMAGE SHALL BE INSTALLED WITH PROTECTIVE CAGES.
15. PATCH PIPE CORES WHERE FIRE PROTECTION PIPING HAS BEEN INSTALLED. PAINT PATCH WORK TO MATCH SURFACES.
16. CONTRACTOR IS TO CLEAN/FLUSH ENTIRE SYSTEM BACK TO THE STREET WATER MAIN.
17. AT THE COMPLETION, TEST ENTIRE SYSTEM PER NFPA-13, NFPA-14, NFPA-20, AND NFPA-25. FILE ALL REPORTS AND CERTIFICATIONS. SUBMIT TO OWNER COPIES OF ALL REPORTS AND CERTIFICATIONS, TOGETHER WITH A COPY OF NFPA-25.
18. INSTRUCT THE OWNER ON MAINTENANCE PROCEDURES AND SYSTEM OPERATION.
19. SUBMIT ACCURATE AS-BUILT DRAWINGS.
20. PROVIDE PROPER SEISMIC RESTRAINTS FOR ALL REQUIRED FIRE PROTECTION PIPING PER NFPA AND LOCAL BUILDING CODES.
21. PRESSURE TEST ALL PIPING AND ALARMS PER NFPA.
22. WHERE ALL SPRINKLER PIPING IS EXPOSED, COORDINATE PAINTING PIPING AND SPRINKLERS WITH ARCHITECT/ENGINEER. SPRINKLERS SHALL BE FACTORY PAINTED AND NOT FIELD PAINTED.
23. EXTERIOR CANOPIES CONSTRUCTED OF NON-COMBUSTIBLE CONSTRUCTION DO NOT REQUIRE SPRINKLER PROTECTION PER NFPA-13.
24. INSTALL ALL PENDENT SPRINKLERS LOCATED ON SUSPENDED CEILINGS ON CENTER OF CEILING TILES BOTH WAYS. IF SPRINKLERS ARE LOCATED IN GYPSUM CEILINGS, INSTALL AND ALIGN HORIZONTALLY AND VERTICALLY WITH LIGHT FIXTURES AS MUCH AS POSSIBLE SPACING REQUIREMENTS ALLOW.

## FIRE PROTECTION LEGEND

| | | |
|---|---|---|
| | | NEW WORK PIPING (INDICATED AS HEAVY LINE) |
| | ETR | EXISTING TO REMAIN (INDICATED AS LIGHT LINE) |
| | RE | EXISTING PIPING / EQUIPMENT TO BE REMOVED |
| | CTE | CONNECT TO EXISTING |
| F | F | FIRE SERVICE BELOW GRADE OR BURIED |
| | WS | WET SPRINKLER PIPE |
| D | D | SPRINKLER DRAIN |
| FDC | FDC | FIRE DEPARTMENT CONNECTION PIPE |
| | | PIPE TEE LOOKING UP |
| | | PIPE TEE LOOKING DOWN |
| | UP/RISE | PIPE RISER |
| | DN/DR | PIPE ELBOW DOWN OR DROP |
| | | CONTINUATION |
| | | FLOW IN DIRECTION OF ARROW |
| | UN | UNION |
| FS | FS | FLOW SWITCH |
| | GV | GATE VALVE |
| | OS&Y | OS&Y GATE VALVE |
| | BV | BALL VALVE |
| | VIV | VALVE IN VERTICAL |
| | WACV | ALARM CHECK VALVE (WET SYSTEM) |
| | DV | DRAIN VALVE WITH HOSE END |
| | FDV | FIRE DEPARTMENT VALVE |
| | FDC | SIAMESE FIRE DEPARTMENT CONNECTION |
| | U | UPRIGHT WET SPRINKLER |
| | P | PENDENT WET SPRINKLER |
| | C | CONCEALED WET SPRINKLER |
| | S | SIDEWALL WET SPRINKLER |
| | UG | UPRIGHT W/ GUARD |
| | EB / WMG | ELECTRIC BELL / WATER MOTOR GONG |
| | EX | EXISTING |
| | TYP | TYPICAL |
| | TS | TAMPER SWITCH |
| | AFF | ABOVE FINISHED FLOOR |
| | FFE | FINISHED FLOOR ELEVATION |
| | AFG | ABOVE FINISHED GRADE |
| | LFPC | LIMIT OF FIRE PROTECTION CONTRACT |
| | NFPC | NOT IN FIRE PROTECTION CONTRACT |
| | GC | GENERAL CONTRACTOR |
| | FPC | FIRE PROTECTION CONTRACTOR |
| | PC | PLUMBING CONTRACTOR |
| | EC | ELECTRICAL CONTRACTOR |
| | HVAC | HVAC CONTRACTOR |

# JOSLIN RECREATION CENTER - CPF RENOVATION

17 Hyatt St., Providence, RI 2909

Owner:
City of Providence, Dept. of Public Property
25 Dorrance Street
Providence, Rhode Island 02903


Rowse Architects
400 Massasoit Avenue
Suite 300, Second Floor
East Providence, Rhode Island
p. (401) 331-9200

2 Hampshire Street
Suite 106, First Floor
Foxboro, Massachusetts
p. (774) 215-0290
rowse@rowsearchitects.com



OWNERSHIP AND USE OF DOCUMENTS, DRAWINGS AND SPECIFICATIONS AS INSTRUMENTS OF PROFESSIONAL SERVICE, ARE, AND SHALL REMAIN, THE PROPERTY OF THE ARCHITECT. THESE DOCUMENTS ARE NOT TO BE USED, IN WHOLE OR IN PART, FOR ANY OTHER PROJECTS OR PURPOSES, OR BY ANY OTHER PARTIES THAN THOSE PROPERLY AUTHORIZED BY CONTRACT WITHOUT THE EXPRESS AUTHORIZATION OF THE ARCHITECT.



B|E|R
BUILDING ENGINEERING RESOURCES, INC.
66 Main Street
N. Easton, MA 02356
T 508.230.0260
F 508.230.0265
ber@ber-engineering.com

Office Commons 95
351 Centerville Road
Warwick, RI 02886
T 401.384.7682
www.ber-engineering.com


## GENERAL NOTES

1. CONTRACTOR SHALL VISIT SITE, PRIOR TO BID, AND CAREFULLY INVESTIGATE AND EXAMINE THE AREA OF WORK SO AS TO SATISFY HIMSELF AS TO THE NATURE AND LOCATION OF THE WORK. CONTRACTOR TO NOTE THE CHARACTER, QUALITY, QUANTITIES OF MATERIALS REQUIRED AND DIFFICULTIES TO BE ENCOUNTERED. THE KIND AND EXTENT OF EQUIPMENT AND FACILITIES NEEDED FOR PERFORMANCE OF THE WORK AND OTHER ITEMS WHICH MAY, IN ANY WAY, AFFECT THE WORK OR CONTRACTOR'S PERFORMANCE.
2. DRAWINGS DO NOT INCLUDE NECESSARY COMPONENTS FOR CONSTRUCTION SAFETY.

**Date:** 05/05/2025
**Drawn by:** AG **Proj. Mgr.:** ARV

**Revisions**

| No. | Date | Description |
|---|---|---|
| | | |
| | | |
| | | |
| | | |
| | | |
| | | |
| | | |
| | | |

FIRE PROTECTION LEGEND, NOTES, & DETAILS

FP0.01



BLDG 2490

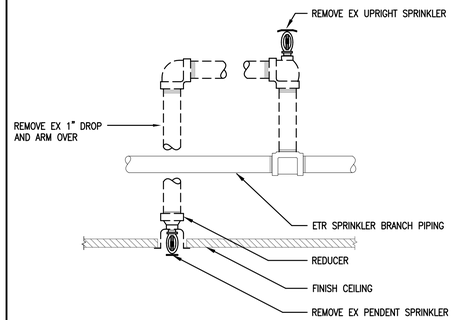


NOTE:
REFER TO CONTRACT DRAWINGS FOR SPRINKLER TYPES AND LOCATION REQUIREMENTS WITHIN CEILING TILES.

1 PENDENT SPRINKLER DEMOLITION DIAGRAM NTS

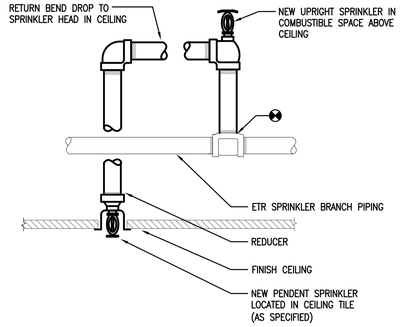


NOTE:
REFER TO SPECIFICATIONS FOR SPRINKLER TYPES AND LOCATION REQUIREMENTS.

2 PENDENT SPRINKLER RETURN BEND DROP NTS

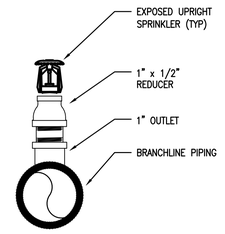


NOTE:
REFER TO SPECIFICATION SECTION 210000 FOR SPRINKLER HEAD TYPES AND LOCATION REQUIREMENTS.

3 EXPOSED UPRIGHT SPRINKLER NTS

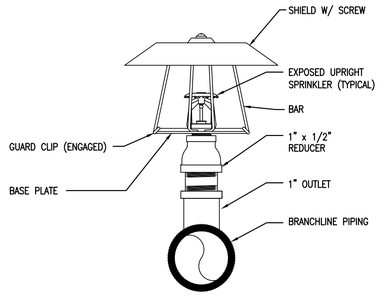


NOTE:
REFER TO SPECIFICATION SECTION 210000 FOR SPRINKLER HEAD TYPES AND LOCATION REQUIREMENTS.

4 UPRIGHT SPRINKLER W/ GUARD NTS

NOTE:
FIRESTOP SEALANTS AND PIPING PENETRATIONS THROUGH FIRE RATED ASSEMBLIES SHALL COMPLY WITH THE UL FIRE RESISTANCE DIRECTORY.

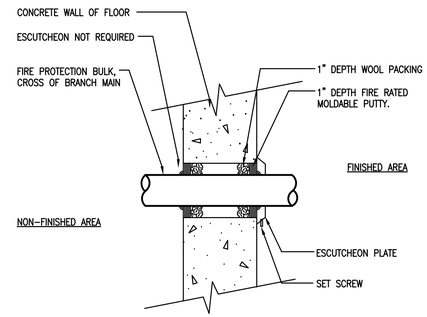


5 MASONRY WALL FIRE RATED SLEEVE NTS

NOTE:
FIRESTOP SEALANTS AND PIPING PENETRATIONS THROUGH FIRE RATED ASSEMBLIES SHALL COMPLY WITH THE UL FIRE RESISTANCE DIRECTORY.

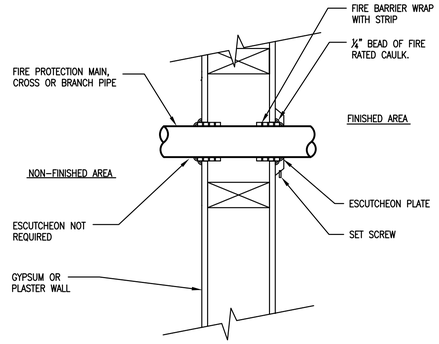


6 STUD WALL FIRE RATED SLEEVE DIAGRAM NTS

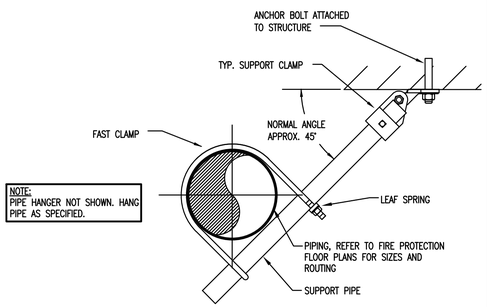


NOTE:
PIPE HANGER NOT SHOWN. HANG PIPE AS SPECIFIED.

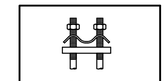


7 LATERAL SEISMIC BRACING DIAGRAM NTS

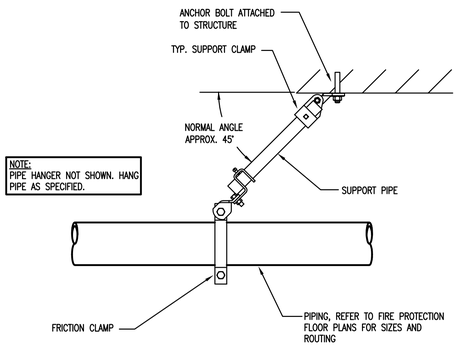


NOTE:
PIPE HANGER NOT SHOWN. HANG PIPE AS SPECIFIED.

8 LONGITUDINAL SEISMIC BRACING DIAGRAM NTS

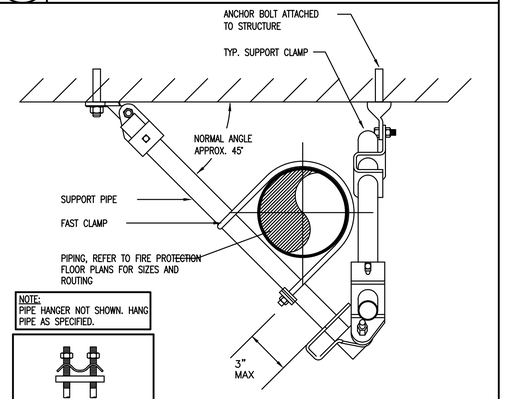


NOTE:
PIPE HANGER NOT SHOWN. HANG PIPE AS SPECIFIED.




9 4-WAY LONGITUDINAL SEISMIC BRACING NTS

# JOSLIN RECREATION CENTER - CPF RENOVATION

17 Hyatt St., Providence, RI 2909

Owner:
City of Providence, Dept. of Public Property
25 Dorrance Street
Providence, Rhode Island 02903


Rowse Architects
400 Massasoit Avenue
Suite 300, Second Floor
East Providence, Rhode Island
p. (401) 331-9200

2 Hampshire Street
Suite 106, First Floor
Foxboro, Massachusetts
p. (774) 215-0290
rowse@rowsearchitects.com



OWNERSHIP AND USE OF DOCUMENTS, DRAWINGS AND SPECIFICATIONS AS INSTRUMENTS OF PROFESSIONAL SERVICE, ARE, AND SHALL REMAIN, THE PROPERTY OF THE ARCHITECT. THESE DOCUMENTS ARE NOT TO BE USED, IN WHOLE OR IN PART, FOR ANY OTHER PROJECTS OR PURPOSES, OR BY ANY OTHER PARTIES THAN THOSE PROPERLY AUTHORIZED BY CONTRACT WITHOUT THE EXPRESS AUTHORIZATION OF THE ARCHITECT.



B|E|R
BUILDING ENGINEERING RESOURCES, INC.
66 Main Street
N. Easton, MA 02356
T 508.230.0260
F 508.230.0265
ber@ber-engineering.com

Office Commons 95
351 Centerville Road
Warwick, RI 02886
T 401.384.7682
www.ber-engineering.com


## GENERAL NOTES

1. CONTRACTOR SHALL VISIT SITE, PRIOR TO BID, AND CAREFULLY INVESTIGATE AND EXAMINE THE AREA OF WORK SO AS TO SATISFY HIMSELF AS TO THE NATURE AND LOCATION OF THE WORK. CONTRACTOR TO NOTE THE CHARACTER, QUALITY, QUANTITIES OF MATERIALS REQUIRED AND DIFFICULTIES TO BE ENCOUNTERED. THE KIND AND EXTENT OF EQUIPMENT AND FACILITIES NEEDED FOR PERFORMANCE OF THE WORK AND OTHER ITEMS WHICH MAY, IN ANY WAY, AFFECT THE WORK OR CONTRACTOR'S PERFORMANCE.

2. DRAWINGS DO NOT INCLUDE NECESSARY COMPONENTS FOR CONSTRUCTION SAFETY.

**Date:** 05/05/2025
**Drawn by:** AG **Proj. Mgr.:** ARV

**Revisions**

| No. | Date | Description |
|---|---|---|
| | | |
| | | |
| | | |
| | | |
| | | |
| | | |
| | | |

FIRE PROTECTION DETAILS

FP0.02



BER# 24098

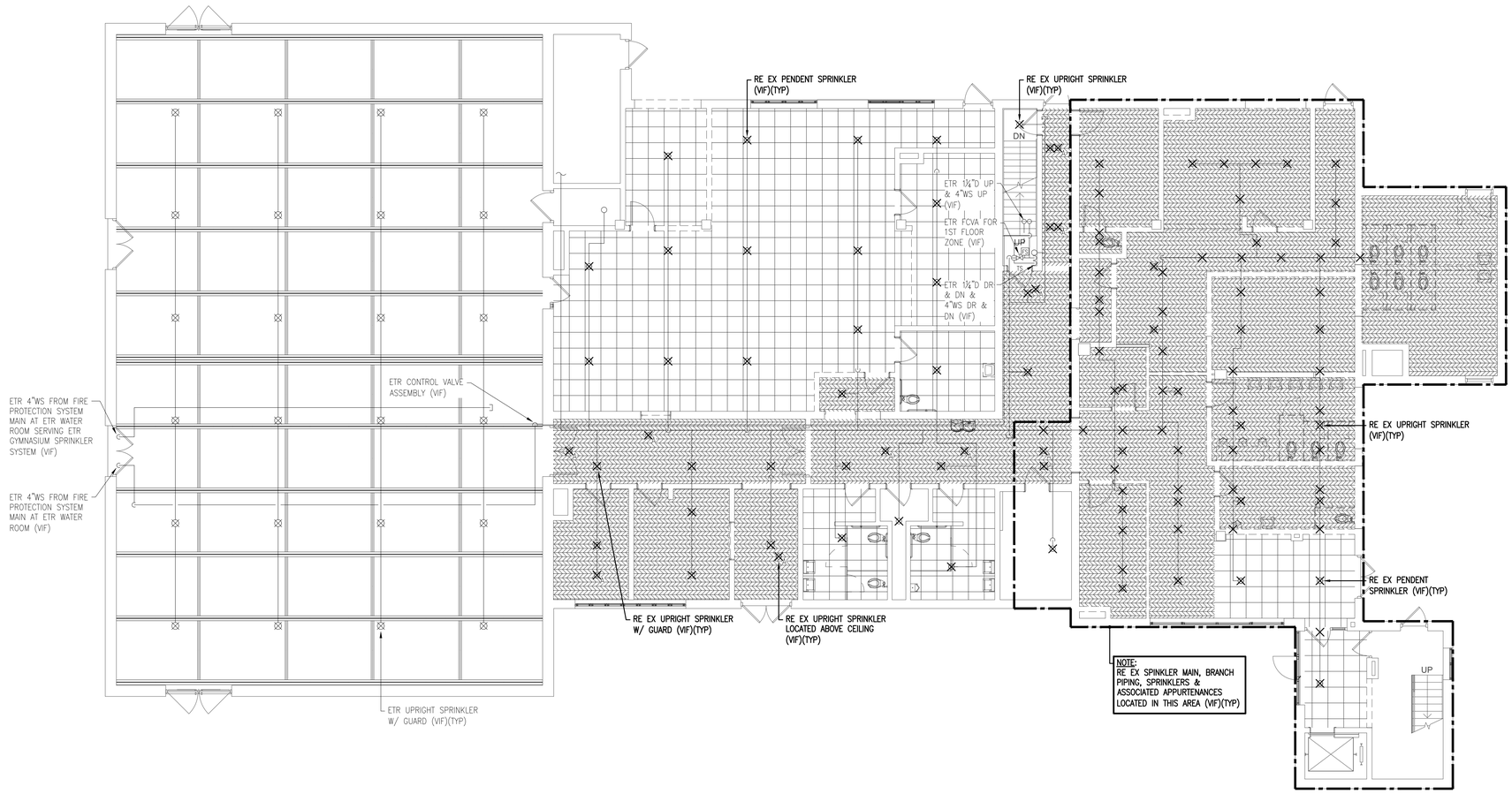


1 FPD1.00 FIRST FLOOR DEMOLITION PLAN - FIRE PROTECTION

1/8" = 1'-0"

# JOSLIN RECREATION CENTER - CPF RENOVATION

17 Hyatt St., Providence, RI 2909

Owner:
City of Providence, Dept. of Public Property
25 Dorrance Street
Providence, Rhode Island 02903


ROWSE Architects
400 Massasoit Avenue
Suite 300, Second Floor
East Providence, Rhode Island
p. (401) 331-9200

2 Hampshire Street
Suite 106, First Floor
Foxboro, Massachusetts
p. (774) 215-0290
rowse@rowsearchitects.com



**OWNERSHIP AND USE OF DOCUMENTS, DRAWINGS AND SPECIFICATIONS AS INSTRUMENTS OF PROFESSIONAL SERVICE, ARE, AND SHALL REMAIN, THE PROPERTY OF THE ARCHITECT. THESE DOCUMENTS ARE NOT TO BE USED, IN WHOLE OR IN PART, FOR ANY OTHER PROJECTS OR PURPOSES, OR BY ANY OTHER PARTIES THAN THOSE PROPERLY AUTHORIZED BY CONTRACT WITHOUT THE EXPRESS AUTHORIZATION OF THE ARCHITECT.**



B|E|R
BUILDING ENGINEERING RESOURCES, INC.
66 Main Street
N. Easton, MA 02356
T 508.230.0260
F 508.230.0265
ber@ber-engineering.com

Office Commons 95
351 Centerville Road
Warwick, RI 02886
T 401.384.7682
www.ber-engineering.com


## GENERAL NOTES

1. CONTRACTOR SHALL VISIT SITE, PRIOR TO BID, AND CAREFULLY INVESTIGATE AND EXAMINE THE AREA OF WORK SO AS TO SATISFY HIMSELF AS TO THE NATURE AND LOCATION OF THE WORK, CONTRACTOR TO NOTE THE CHARACTER, QUALITY, QUANTITIES OF MATERIALS REQUIRED AND DIFFICULTIES TO BE ENCOUNTERED, THE KIND AND EXTENT OF EQUIPMENT AND FACILITIES NEEDED FOR PERFORMANCE OF THE WORK AND OTHER ITEMS WHICH MAY, IN ANY WAY, AFFECT THE WORK OR CONTRACTOR'S PERFORMANCE.

2. DRAWINGS DO NOT INCLUDE NECESSARY COMPONENTS FOR CONSTRUCTION SAFETY.

**Date:** 05/05/2025

**Drawn by:** AG **Proj. Mgr.:** ARV

**Revisions**

| No. | Date | Description |
|---|---|---|
| | | |
| | | |
| | | |
| | | |
| | | |
| | | |
| | | |

FIRE PROTECTION
FIRST FLOOR DEMOLITION PLAN

# FPD1.00

###### - FPD1.00 | 47 of 87

BER# 24095

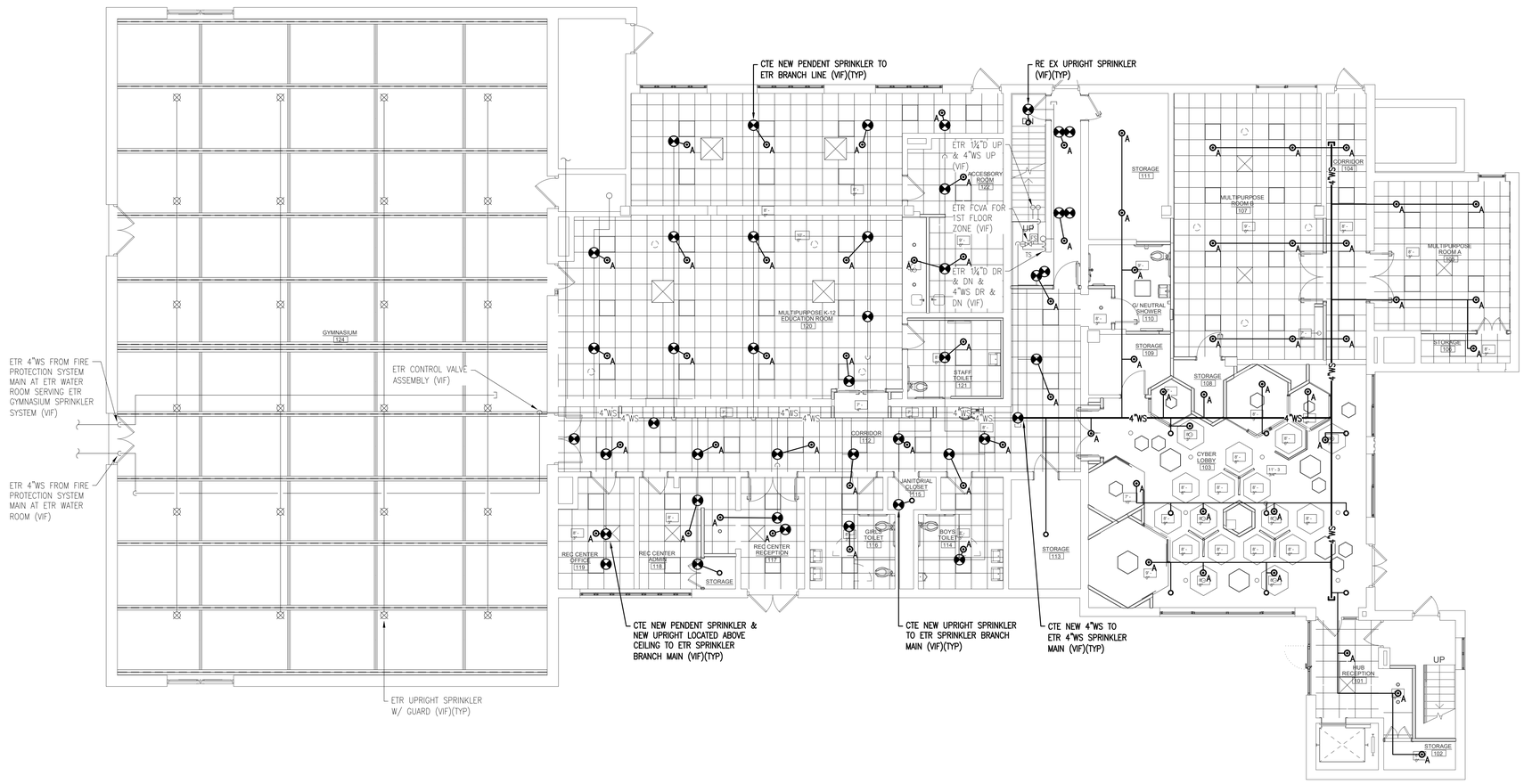


1 FP1.00 FIRST FLOOR PLAN - FIRE PROTECTION

1/8" = 1'-0"

# JOSLIN RECREATION CENTER - CPF RENOVATION

17 Hyatt St., Providence, RI 2909

Owner:
City of Providence, Dept. of Public Property
25 Dorrance Street
Providence, Rhode Island 02903


ROWSE Architects

400 Massasoit Avenue
Suite 300, Second Floor
East Providence, Rhode Island
p. (401) 331-9200

2 Hampshire Street
Suite 106, First Floor
Foxboro, Massachusetts
p. (774) 215-0290

rowse@rowsearchitects.com



**OWNERSHIP AND USE OF DOCUMENTS, DRAWINGS AND SPECIFICATIONS AS INSTRUMENTS OF PROFESSIONAL SERVICE, ARE, AND SHALL REMAIN, THE PROPERTY OF THE ARCHITECT. THESE DOCUMENTS ARE NOT TO BE USED, IN WHOLE OR IN PART, FOR ANY OTHER PROJECTS OR PURPOSES, OR BY ANY OTHER PARTIES THAN THOSE PROPERLY AUTHORIZED BY CONTRACT WITHOUT THE EXPRESS AUTHORIZATION OF THE ARCHITECT.**



B|E|R
BUILDING ENGINEERING RESOURCES, INC.
66 Main Street
N. Easton, MA 02356
T 508.230.0260
F 508.230.0265
ber@ber-engineering.com

Office Commons 95
351 Centerville Road
Warwick, RI 02886
T 401.384.7682
www.ber-engineering.com


## GENERAL NOTES

1. CONTRACTOR SHALL VISIT SITE, PRIOR TO BID, AND CAREFULLY INVESTIGATE AND EXAMINE THE AREA OF WORK SO AS TO SATISFY HIMSELF AS TO THE NATURE AND LOCATION OF THE WORK. CONTRACTOR TO NOTE THE CHARACTER, QUALITY, QUANTITIES OF MATERIALS REQUIRED AND DIFFICULTIES TO BE ENCOUNTERED, THE KIND AND EXTENT OF EQUIPMENT AND FACILITIES NEEDED FOR PERFORMANCE OF THE WORK AND OTHER ITEMS WHICH MAY, IN ANY WAY, AFFECT THE WORK OR CONTRACTOR'S PERFORMANCE.

2. DRAWINGS DO NOT INCLUDE NECESSARY COMPONENTS FOR CONSTRUCTION SAFETY.

**Date:** 05/05/2025

**Drawn by:** AG **Proj. Mgr.:** ARV

**Revisions**

| No. | Date | Description |
|---|---|---|
| | | |
| | | |
| | | |
| | | |
| | | |
| | | |
| | | |

FIRE PROTECTION
FIRST FLOOR PLAN

# FP1.00



BER# 24055

## LEGEND NOTES

MOUNTING HEIGHTS SHALL BE AS INDICATED UNLESS INDICATED OTHERWISE ON ELECTRICAL DRAWINGS OR ARCHITECTURAL ELEVATIONS

ALL SYMBOLS MAY NOT BE SHOWN ON PLANS

## HOMERUNS

| Symbol | Description |
|---|---|
| P-1 | HOMERUN TO PANELBOARD. "P" DENOTES PANEL, "1" DENOTES CIRCUIT NUMBER, 20 AMP, 1 POLE CIRCUIT BREAKER UNLESS INDICATED OTHERWISE. WIRING SHALL BE 2#12+1#12G IN 3/4"C AT MINIMUM. |
| 30/3 P-2,4,6 2#10+1#10G IN 3/4"C | MULTI-POLE HOMERUN TO PANELBOARD. "P" DENOTES PANEL, "2,4,6" DENOTES CIRCUIT NUMBERS, "30/3" DENOTES 30 AMP 3 POLE CIRCUIT BREAKER. WIRING SHALL BE AS INDICATED. |

## RACEWAYS AND WIRING

| Symbol | Description |
|---|---|
| E | 2#10,#10G EMERGENCY ONLY WIRING |
| CT | CABLE TRAY - REFER TO SPECIFICATIONS FOR REQUIREMENTS |
| | FLEXIBLE CONNECTION TO EQUIPMENT. RACEWAY AND CONDUCTOR RATING TO MATCH ASSOCIATED BRANCH CIRCUIT OR FEEDER. |
| | BRANCH CIRCUIT OR FEEDER CONCEALED IN FINISHED AREA. |
| | BRANCH CIRCUIT OR FEEDER CONCEALED UNDER FINISHED FLOOR. |
| | BRANCH CIRCUIT OR FEEDER TURNING UP TOWARDS OBSERVER. |
| | BRANCH CIRCUIT OR FEEDER TURNING DOWN AWAY FROM OBSERVER. |
| | CONDUIT STUBBED ABOVE CEILING. |

## LIGHTING FIXTURES

| Symbol | Description |
|---|---|
| A 2a | SURFACE OR RECESSED MOUNTED LIGHTING FIXTURE ON NORMAL CIRCUIT. "A" DENOTES FIXTURE TYPE, "2" DENOTES CIRCUIT NUMBER, "a" DENOTES SWITCH CONTROL. |
| | LIGHTING FIXTURE WIRED TO CONSTANT-ON OR NORMAL EMERGENCY CIRCUIT |
| | SURFACE OR RECESSED MOUNTED LINEAR LIGHTING FIXTURE |
| | PENDANT MOUNTED LINEAR LIGHTING FIXTURE |
| | ROUND RECESSED LIGHTING FIXTURE |
| | DECORATIVE PENDANT LIGHTING FIXTURE |
| | WALL MOUNTED LIGHTING FIXTURE |
| | WALL WASH OR DIRECTIONAL LIGHTING FIXTURE |
| | CEILING MOUNTED ILLUMINATED EXIT SIGN. SINGLE OR DOUBLE FACE, WITH OR WITHOUT ARROWS AS INDICATED ON DRAWINGS |
| | WALL MOUNTED ILLUMINATED EXIT SIGN - SHADING INDICATES FACE PLATE(S) |
| | SELF-CONTAINED EMERGENCY LIGHTING UNIT |
| | REMOTE EMERGENCY LIGHTING HEADS - SINGLE OR DOUBLE AS SHOWN. |

## LIGHTING CONTROL DEVICES

| Symbol | Description |
|---|---|
| Sa | SINGLE POLE TOGGLE SWITCH; SUBSCRIPT INDICATES LIGHTING FIXTURE CONTROL. |
| S3a | THREE WAY TOGGLE SWITCH; SUBSCRIPT INDICATES LIGHTING FIXTURE CONTROL. |
| S4a | FOUR WAY TOGGLE SWITCH; SUBSCRIPT INDICATES LIGHTING FIXTURE CONTROL. |
| SKa | KEY OPERATED SWITCH; SUBSCRIPT INDICATES LIGHTING FIXTURE CONTROL. |
| SP | SINGLE POLE TOGGLE SWITCH WITH RED PILOT LIGHT. |
| SDa | DIMMER SWITCH; SUBSCRIPT INDICATES LIGHTING FIXTURE CONTROL. |
| OC | CEILING MOUNTED OCCUPANCY SENSOR. |
| VS | CEILING MOUNTED VACANCY SENSOR. |
| OC | WALL MOUNTED OCCUPANCY SENSOR. |
| VS | WALL MOUNTED VACANCY SENSOR. |
| PC | PHOTOCELL. |
| TC | TIME CLOCK. |

## RECEPTACLES AND POWER DEVICES

| Symbol | Description |
|---|---|
| IG 2 48" WP | DUPLEX RECEPTACLE, "2" DENOTES CIRCUIT NUMBER, "48"" DENOTES MOUNTING HEIGHT (18" UNLESS OTHERWISE NOTED), "IG" DENOTES ISOLATED GROUND TYPE DEVICE, "WP" DENOTES WEATHER PROOF COVER |
| | DUPLEX RECEPTACLE MOUNTED 6" ABOVE COUNTER TOP OR AS INDICATED ON ARCHITECTURAL PLANS |
| | DOUBLE DUPLEX RECEPTACLE |
| | DOUBLE DUPLEX RECEPTACLE MOUNTED 6" ABOVE COUNTER TOP OR AS INDICATED ON THE ARCHITECTURAL PLANS |
| | DUPLEX RECEPTACLE ONE HALF SWITCH CONTROLLED |
| EWC | DUPLEX RECEPTACLE FOR ELECTRIC WATER COOLER. PROVIDE DEDICATED 20A/1P GFCI CIRCUIT BREAKER UNLESS NOTED OTHERWISE. |
| | DUPLEX RECEPTACLE FLOOR MOUNTED |
| L6-30 | SPECIAL PURPOSE RECEPTACLE, "L6-30" DENOTES TYPE, SEE POWER PLANS FOR EXACT TYPES USED. |
| | SINGLE RECEPTACLE |
| | DUPLEX GROUND FAULT CIRCUIT INTERRUPTER RECEPTACLE |
| | CEILING MOUNTED DUPLEX RECEPTACLE |
| U2 | DUPLEX RECEPTACLE WITH (2) USB TYPE A PORTS. |
| 12 | FACTORY WIRED, FIELD ASSEMBLED UL LISTED, MULTIOUTLET ASSEMBLY. "12" DENOTES SINGLE RECEPTACLES MOUNTED ON 12" CENTERS |
| | FIELD WIRED, UL LISTED, OF MULTIOUTLET ASSEMBLY, QUANTITY AND TYPE DEVICES AS INDICATED |
| | SURFACE MOUNTED RACEWAY, DIVIDED RACEWAY WITH DATA AND DUPLEX RECEPTACLES AS INDICATED |
| PP | POWER POLE ASSEMBLY |
| PT | FIRE RATED POKE-THRU WITH FLUSH MOUNTED DEVICES. REFER TO DRAWINGS FOR ADDITIONAL INFORMATION. |
| FF | FIRE RATED FURNITURE FEED WITH FLEXIBLE CONNECTION TO FURNITURE SYSTEM. REFER TO DRAWINGS FOR ADDITIONAL INFORMATION. |
| FB | FIRE RATED FLOOR BOX WITH FLUSH MOUNTED DEVICES. REFER TO DRAWINGS FOR ADDITIONAL INFORMATION. |

## POWER DISTRIBUTION SYSTEM

| Symbol | Description |
|---|---|
| | DISTRIBUTION PANEL |
| | PANELBOARD, SURFACE MOUNTED |
| | PANELBOARD, FLUSH MOUNTED |
| J | JUNCTION BOX, SIZED PER NEC |
| 2 | MOTOR, "2" DENOTES HORSEPOWER |
| STP | MANUAL MOTOR STARTER WITH THERMAL OVERLOAD. "P" DENOTES PILOT LIGHT |
| | MAGNETIC MOTOR STARTER WITH ENCLOSURE, MINIMUM SIZE NEMA 1 |
| 30/3 | NON-FUSED DISCONNECT SWITCH: "30/3" DENOTES 30 AMP/3 POLE SWITCH |
| 30/20/3 | FUSED DISCONNECT SWITCH: "30/20/3" DENOTES 30 AMP/3 POLE SWITCH, 20 AMP FUSES |
| | COMBINATION MAGNETIC STARTER AND FUSED DISCONNECT SWITCH. SIZE OF STARTER, SWITCH AND FUSE AS REQUIRED |
| M | METER SOCKET AND UTILITY METER BY UTILITY COMPANY |
| CB | ENCLOSED CIRCUIT BREAKER |
| EGB | ELECTRICAL GROUNDING BUSBAR |
| EMGB | ELECTRICAL MAIN GROUNDING BUSBAR |
| | GROUND |

## TELECOMMUNICATIONS

TELECOMMUNICATIONS:
E.C. SHALL PROVIDE A DOUBLE GANG BACK BOX WITH SINGLE GANG REDUCER, 1" CONDUIT AND PULLSTRING STUBBED OUT ABOVE ACCESSIBLE CEILING AT ALL LOCATIONS. ALL DEVICES SHALL BE MOUNTED AT 18" AFF UNLESS OTHERWISE NOTED.

| Symbol | Description |
|---|---|
| | TELEPHONE OUTLET |
| W | TELEPHONE OUTLET MOUNTED 54"AFF |
| | TELEPHONE OUTLET FLOOR MOUNTED |
| | COMPUTER SYSTEM OUTLET |
| | COMPUTER SYSTEM OUTLET, FLOOR MOUNTED |
| | COMBINATION TELEPHONE/DATA OUTLET |
| | WIRELESS ACCESS POINT |
| PP T/D | COMBINATION TELEPHONE/DATA POWER POLE ASSEMBLY |
| TGB | TELECOMMUNICATIONS GROUNDING BUSBAR |
| TMGB | TELECOMMUNICATIONS MAIN GROUNDING BUSBAR |
| | TELECOMMUNICATION TERMINAL BOARD, PROVIDE GRADE "A", 3/4" PLYWOOD COMPLETELY PAINTED WITH FIREPROOF PAINT AS REQUIRED PER CODE. COORDINATE PAINT COLOR WITH ARCHITECT. |

## ABBREVIATIONS

| Abbr. | Meaning | Abbr. | Meaning |
|---|---|---|---|
| 3R | NEMA 3R RATING | JB | JUNCTION BOX |
| 4X | NEMA 4X RATING | KCMIL | ONE THOUSAND CIRCULAR MILS |
| A/AMP | AMPERES | KVA | KILOVOLT-AMPERES |
| AC | ALTERNATING CURRENT | KW | KILOWATTS |
| ADA | AMERICAN WITH DISABILITIES ACT | MCA | MINIMUM CIRCUIT AMPS |
| AF | AMPERE FRAME | MCB | MAIN CIRCUIT BREAKER |
| AFF | ABOVE FINISHED FLOOR | MCC | MOTOR CONTROL CENTER |
| AFG | ABOVE FINISHED GRADE | MD | MOTORIZED DAMPER |
| AHJ | AUTHORITY HAVING JURISDICTION | MLO | MAIN LUGS ONLY |
| AIC | AMPERE INTERRUPTING CAPACITY | MOCP | MAXIMUM OVER-CURRENT PROTECTION |
| AL | ALUMINUM | MH | MANHOLE |
| AT | AMPERE TRIP | N | NEUTRAL |
| ARCH | ARCHITECT | NC | NORMALLY CLOSED |
| ATS | AUTOMATIC TRANSFER SWITCH | NEC | NATIONAL ELECTRICAL CODE |
| AWG | AMERICAN WIRE GAUGE | NL | NIGHT LIGHT |
| BFG | BELOW FINISHED GRADE | NIC | NOT IN CONTRACT |
| C | CONDUIT | NO | NORMALLY OPEN |
| C.T. | CURRENT TRANSFORMER | NTS | NOT TO SCALE |
| CAT | CATALOG | Ø | PHASE |
| CATV | CABLE TELEVISION | P | POLE |
| CB | CIRCUIT BREAKER | PC | PLUMBING CONTRACTOR |
| CCTV | CLOSED CIRCUIT TV SYSTEM | P.T. | POTENTIAL TRANSFORMER |
| CD | CANDELA | PVC | POLYVINYL CHLORIDE |
| CKT | CIRCUIT | SN | SOLID NEUTRAL |
| CU | COPPER | SM | SURFACE MOUNT |
| dB | DECIBEL | ST | SHUNT TRIP |
| DC | DIRECT CURRENT | T/D | TEL/DATA |
| DWG | DRAWING | TEL | TELEPHONE |
| E | WIRED ON EMERGENCY CIRCUIT | TVSS | TRANSIENT VOLTAGE SURGE SUPPRESSOR |
| EC | ELECTRICAL CONTRACTOR | TYP | TYPICAL |
| EM | EMERGENCY | UG | UNDERGROUND |
| F | FAHRENHEIT | UL | UNDERWRITERS LABORATORIES |
| FBA | FINISH BY ARCHITECT | UNO | UNLESS NOTED OTHERWISE |
| FLA | FULL LOAD AMPERES | UPS | UNINTERRUPTIBLE POWER SUPPLY |
| G | GROUND | V | VOLTS |
| GC | GENERAL CONTRACTOR | VA | VOLT-AMPERE |
| GFCI | GROUND FAULT CIRCUIT INTERRUPTER | VFD | VARIABLE FREQUENCY DRIVE |
| HH | HAND HOLE | VIF | VERIFY IN FIELD |
| HP | HORSE POWER | W | WATT |
| HVAC | HEATING, VENTILATION, AIR CONDITIONING CONTRACTOR | WP | WEATHERPROOF |
| HZ | HERTZ | XFMR | TRANSFORMER |
| IG | ISOLATED GROUND | | |

## MISCELLANEOUS

| Symbol | Description |
|---|---|
| CP | CONTROL PANEL |
| PB | PULL BOX - SIZED PER NEC FOR CONDUITS ENTERING AND LEAVING AS REQUIRED |
| TV | CABLE TELEVISION OUTLET, WALL MOUNTED. E.C. SHALL PROVIDE 3/4" EMPTY CONDUIT WITH PULL STRING TO NEAREST ACCESSIBLE CEILING. PROVIDE FACEPLATE WITH TYPE "F" CONNECTOR AT BOX. |
| DB | DISPLAY OUTLET BOX; REFER TO AUDIO VISUAL DRAWINGS FOR ADDITIONAL INFORMATION. |
| GD | GARAGE DOOR 3 BUTTON CONTROL STATION. |
| P | PUSHBUTTON AND PLATE |
| C | 120 VOLT RECESSED CLOCK HANGER OUTLET |
| | CENTRAL SYSTEM CLOCK WIRED TO CORRECTIVE CLOCK WIRING SYSTEM 12" DIAMETER UNLESS OTHERWISE NOTED "SP" DENOTES SHATTER GUARD |
| CS | CLOCK/SPEAKER COMBINATION |
| MCP | MASTER CLOCK PANEL |
| I | INTERCOM |
| MIP | MASTER INTERCOM PANEL |
| | DOOR BELL/BUZZER, LOW VOLTAGE |
| TL | LOW VOLTAGE TRANSFORMER |
| # E### | PARTIAL PLAN/DETAIL CALL OUT TAG; TOP NUMBER INDICATES PLAN/DETAIL AND BOTTOM NUMBER INDICATES SHEET CONTAINING PLAN/DETAIL. |
| FV | FLUSH VALVE/SENSOR FAUCET POWER CONNECTION TO ALL TRANSFORMERS FOR PLUMBING FIXTURES IN ROOM COORDINATE EXACT REQUIREMENTS AND LOCATIONS WITH PLUMBING CONTRACTOR. |

## LIGHTING FIXTURE NOTES

1. PROVIDE ACCESSORIES AND MOUNTING HARDWARE FOR ALL FIXTURES.
2. COLORS AND FINISHES SHALL BE AS SELECTED BY ARCHITECT.
3. COORDINATE EXACT LOCATIONS OF ALL FIXTURES WITH ARCHITECT'S REFLECTED CEILING PLAN, ELEVATIONS, SECTIONS, AND THE WORK OF OTHER TRADES PRIOR TO ROUGH-IN.
4. SUPPORT EACH LIGHTING FIXTURE INDEPENDENTLY OF THE SUSPENDED CEILING SYSTEM AND COORDINATE LOCATIONS WITH REFLECTED CEILING PLAN AND OTHER TRADES TO AVOID CONFLICT.
5. E.C. SHALL ENSURE THAT ALL PROPOSED SWITCHES AND DIMMER SWITCHES ARE COMPATIBLE WITH THE LIGHT FIXTURE(S) INDICATED TO BE CONTROLLED. INSTALL ALL SWITCHES AND DIMMER SWITCHES PER MANUFACTURER'S RECOMMENDATIONS AND REQUIREMENTS.
6. ALL SELF CONTAINED EMERGENCY LIGHTING UNITS AND EXIT LIGHTING IN THE BUILDING SHALL BE CONNECTED TO THE NEAREST UN-SWITCHED LIGHTING CIRCUIT SERVING THE AREA WITH 2#12 & 1#12G, 3/4" CONDUIT UNLESS OTHERWISE NOTED.
7. LOCATIONS OF ALL SWITCHES SHALL COMPLY WITH ADA CRITERIA.
8. WHERE SWITCH CONTROLS ("a", "b", ETC.) ARE INDICATED, WIRE THE SWITCHES TO THE RESPECTIVE LIGHT FIXTURE. IF A FIXTURE HAS TWO OR MORE SWITCH DESIGNATIONS, WIRE FIXTURE SO THAT IT WILL BE CONTROLLED BY THE SWITCHES INDICATED.
9. WIRE EXIT SIGNS TO LIGHTING CIRCUIT SERVING THE AREA AHEAD OF ALL CONTROLS.
10. WIRE NIGHT LIGHTING FIXTURES FOR 24/7 OPERATION VIA UN-SWITCHED CIRCUIT AS INDICATED.
11. METAL ROOF DECKS SHALL NOT BE TAPPED FOR SUPPORT OF ANY LIGHTING FIXTURES OR ELECTRICAL EQUIPMENT. PROVIDE UNISTRUT OR OTHER SUPPLEMENTAL SUPPORT FITTINGS TO BE ATTACHED TO BUILDINGS STRUCTURAL FRAMING AS REQUIRED TO SUPPORT ALL LIGHTING FIXTURES AND ELECTRICAL EQUIPMENT.

## BRANCH CIRCUIT WIRING NOTES

1. WIRING IS SHOWN ON DRAWINGS ONLY FOR SPECIFIC ROUTES OR SPECIAL CONDITIONS.
2. WIRING AND CONDUIT SHALL BE REQUIRED BETWEEN ALL OUTLETS INDICATED WITH CIRCUIT NUMBERS AND PANEL DESIGNATIONS.
3. ALL SWITCH CONTROLS SHALL BE PROVIDED WITH WIRING AND CONDUIT AS REQUIRED.
4. ALTHOUGH ALL BRANCH CIRCUIT WIRING AND CONDUIT IS NOT SHOWN, IT IS THE INTENT OF THESE DOCUMENTS THAT A COMPLETE BRANCH CIRCUIT WIRING SYSTEM BE INSTALLED.
5. A GREEN GROUNDING CONDUCTOR SHALL BE RUN WITH ALL CIRCUITS. VERIFY CONDUIT SIZE TO ENSURE IT CAN ACCOMMODATE ALL PHASE, NEUTRAL AND GROUND CONDUCTORS.
6. PROVIDE A NEUTRAL CONDUCTOR TO ALL NEW LIGHTING SWITCH BOXES PER NEC ARTICLE 404.2.
7. IN ALL NON-DWELLING TYPE OCCUPANCIES, ALL 125-VOLT THROUGH 250-VOLT RECEPTACLES SUPPLIED BY SINGLE-PHASE BRANCH CIRCUITS RATED 150 VOLTS OR LESS TO GROUND, 50 AMPERES OR LESS, AND ALL RECEPTACLES SUPPLIED BY THREE-PHASE BRANCH CIRCUITS RATED 150 VOLTS OR LESS TO GROUND, 100 AMPERES OR LESS, SHALL HAVE GROUND-FAULT CIRCUIT-INTERRUPTER PROTECTION FOR PERSONNEL PER NEC ARTICLE 210.8(B)(2).
8. WHERE EXISTING SWITCHES AND RECEPTACLES ARE INDICATED TO REMAIN, THIS CONTRACTOR SHALL REPLACE SAID DEVICE(S) AND DEVICE PLATE(S) WITH NEW TO MATCH THE NEW CONSTRUCTION. WHERE THEY ARE INDICATED AS RELOCATED, EXTEND BRANCH CIRCUIT WIRING TO NEW LOCATION AND PROVIDE NEW DEVICE AND DEVICE PLATE TO MATCH NEW CONSTRUCTION.

## MECHANICAL/PLUMBING EQUIPMENT TAG

| Symbol | Description |
|---|---|
| RTU 1 | MECHANICAL/PLUMBING EQUIPMENT TAG. "RTU" DENOTES EQUIPMENT TYPE, "1" DENOTES EQUIPMENT NUMBER. REFER TO "SCHEDULE FOR MECHANICAL/PLUMBING EQUIPMENT" FOR ALL CIRCUIT INFORMATION, INCLUDING BUT NOT LIMITED TO BRANCH CIRCUIT WIRING, CONDUIT SIZE, VOLTAGE, PHASE, DISCONNECT SWITCH, AND CIRCUIT BREAKER. REFER TO MECHANICAL, PLUMBING, AND FIRE PROTECTION PLANS FOR EXACT EQUIPMENT LOCATIONS AND EQUIPMENT TYPE ABBREVIATIONS. COORDINATE EXACT CONNECTIONS REQUIRED WITH MECHANICAL, PLUMBING, AND FIRE PROTECTION PLANS AND MANUFACTURER'S CUT SHEET/SPECIFICATIONS. |

## DEMOLITION AND REMOVAL WORK

1. PRIOR TO SUBMITTING BID, ELECTRICAL CONTRACTOR SHALL VISIT SITE AND IDENTIFY EXISTING CONDITIONS AND DIFFICULTIES RELATIVE TO NEW WORK THAT IS TO BE COMPLETED BY ALL TRADES. RENOVATION WORK WILL REQUIRE CAREFUL VISUAL EXAMINATION PRIOR TO BIDDING. E.C. SHALL BE COMPLETELY FAMILIAR WITH ALL EXISTING CONDITIONS RELATIVE TO NEW WORK CALLED FOR ON THE DRAWINGS AND SPECIFICATIONS. NO COMPENSATION WILL BE GRANTED FOR ADDITIONAL WORK CAUSED BY UNFAMILIARITY WITH SITE CONDITIONS. THE SUBMISSION OF A BID WILL BE CONSIDERED AS ACKNOWLEDGMENT ON THE PART OF THE BIDDER OF THEIR VISITATION AND COMPLETE FAMILIARITY OF THE SITE. FIELD VERIFY DIMENSIONS AND CIRCUITING ARRANGEMENTS THAT ARE SHOWN ON DRAWINGS.
2. DEMOLITION DRAWINGS ARE BASED ON CASUAL FIELD OBSERVATIONS AND/OR EXISTING RECORD DOCUMENTS. DISCREPANCIES SHALL BE REPORTED TO ARCHITECT/ENGINEER PRIOR TO WORK. THESE DRAWINGS HAVE BEEN COMPILED FROM THE BEST AVAILABLE INFORMATION AND ARE NOT INTENDED TO LIMIT THE SCOPE OF THE WORK. THE ELECTRICAL CONTRACTOR MAY ENCOUNTER HIDDEN OR COVERED CONDITIONS, NOT INDICATED IN THESE DOCUMENTS, REQUIRING THE ELECTRICAL CONTRACTOR TO PROVIDE ADDITIONAL WORK FOR THE COMPLETION OF THEIR CONTRACT. IT WILL BE ASSUMED THAT THE CONTRACTOR HAS INSPECTED THE SITE PRIOR TO BIDDING, DETERMINED ADDITIONAL WORK REQUIRED AND VERIFIED THE INFORMATION SUPPLIED HEREIN. REFER TO ALL CONSTRUCTION DOCUMENTS TO GAIN A COMPLETE UNDERSTANDING OF THE DEMOLITION WORK REQUIRED.
3. REMOVE ALL ELECTRICAL EQUIPMENT, CONDUIT, WIRING, AND OTHER ELECTRICAL ITEMS AS REQUIRED. DISCONNECT LOAD AND LINE END OF CONDUCTORS FEEDING DEVICES WHICH ARE TO BE REMOVED OR ABANDONED, REMOVE CONDUCTORS NO LONGER IN USE. CUT BACK TO FLOOR, WALL, OR CEILING AND PLUG BOTH ENDS OF CONCEALED CONDUITS MADE OBSOLETE BY THIS ALTERATION. REMOVE EXPOSED OR ABANDONED CIRCUITS AND OUTLETS. DISCONNECT AND REMOVE ABANDONED LIGHTING FIXTURES. REMOVE UNUSED BRACKETS, STEMS, HANGERS, AND OTHER ACCESSORIES. REMOVE MATERIAL AND EQUIPMENT AND DISPOSE OF AS DIRECTED.
4. WHEREVER IT IS REQUIRED TO DISCONNECT OR REMOVE ANY PART OF AN EXISTING CIRCUIT, IMMEDIATELY RECONNECT THAT CIRCUIT OR REESTABLISH SERVICE IN THE REMAINING PORTION OF THE CIRCUIT. PROVIDE TEMPORARY WIRING AND CONNECTIONS TO MAINTAIN EXISTING SYSTEMS IN SERVICE DURING CONSTRUCTION.
5. PRIOR TO REMOVING EQUIPMENT AND MATERIAL FROM PROJECT SITE, THE BUILDING MANAGER OR OWNER WILL INSPECT AND ADVISE WHICH ITEMS WILL BE STORED. THE OWNER RESERVES THE OPTION OF SALVAGE RIGHTS TO DEMOLISHED MATERIAL AND REMOVED EQUIPMENT. ALL OTHER NON-HAZARDOUS REMOVED MATERIAL AND EQUIPMENT NOT BEING SALVAGED BY THE OWNER SHALL BE DISPOSED OF BY THE CONTRACTOR. ALL HAZARDOUS ELECTRICAL MATERIALS (BATTERIES, PCB LIGHTING BALLASTS, FLUORESCENT LAMPS, ETC.) SHALL BE LEGALLY DISPOSED OF BY THE ELECTRICAL CONTRACTOR.
6. WHERE EXISTING RECEPTACLES AND/OR SWITCHES ARE LOCATED IN COLUMNS AND/OR EXTERIOR WALLS, AND ARE NOT TO BE REUSED, REMOVE RECEPTACLE AND CAP OUTLET BOX. RECEPTACLES SHOWN ON PARTITIONS TO BE REMOVED SHALL HAVE ALL WIRING AND CONDUIT REMOVED AS WELL.
7. WHERE PRESENT WORK IS DAMAGED IN THE EXECUTION OF THIS CONTRACT, OR WHERE OPENINGS ARE LEFT DUE TO THE REMOVAL OF CONDUITS, EQUIPMENT, OR APPARATUS, THE SAME SHALL BE REPAIRED OR CLOSED UP TO CORRESPOND IN MATERIAL, QUALITY, SHAPE, AND FINISH WITH THAT OR SIMILAR AND ADJOINING WORK, UNLESS OTHERWISE CALLED FOR.
8. SHOULD ANY DAMAGE DUE TO THE EXECUTION OF THIS CONTRACT OCCUR TO THE FURNITURE, FIXTURES, OR ANY OTHER EQUIPMENT OR APPARATUS, SUCH DAMAGES SHALL BE PROPERLY REPAIRED WITH THE SUPPLY OF NEW ARTICLES AND MADE GOOD WITHOUT EXTRA CHARGE.
9. WHERE REMOVAL OF EXISTING ELECTRICAL EQUIPMENT WILL RESULT IN OUTAGES IN AREA NOT TO BE DEMOLISHED, THIS CONTRACTOR SHALL COORDINATE IN ADVANCE AND OBTAIN THE APPROVAL OF THE BUILDING MANAGER OR OWNER.
10. ALL HVAC, PLUMBING, AND FIRE PROTECTION EQUIPMENT SCHEDULED TO BE REMOVED OR RELOCATED SHALL BE DONE SO BY THE ASSOCIATED CONTRACTOR. THE ELECTRICAL CONTRACTOR SHALL REMOVE STARTERS, DISCONNECT SWITCHES, WIRING, CONDUIT, ETC. FOR SAID EQUIPMENT. REFER TO HVAC, PLUMBING, AND FIRE PROTECTION DRAWINGS AND COORDINATE WITH THE RESPECTIVE CONTRACTORS FOR EXACT SCOPE OF WORK.
11. ELECTRICAL CONTRACTOR SHALL COORDINATE IF ANY EXISTING ELECTRICAL OR FIRE ALARM EQUIPMENT, DEVICES, ASSOCIATED WIRING, CONDUIT, ETC. CONFLICTS WITH NEW WORK BY ALL OTHER TRADES. DISCONNECT, RELOCATE, AND EXTEND EXISTING CIRCUITS TO ACCOMMODATE NEW CONSTRUCTION AS REQUIRED.
12. IN AREAS WITH NEW CEILINGS, ELECTRICAL CONTRACTOR SHALL COORDINATE DEVICES THAT SHALL BE RELOCATED IN FIELD PRIOR TO BID. RELOCATE LIGHTING FIXTURES, RECEPTACLES, POWER DEVICES, WIRING, CONDUIT, CABLING, ETC. BELOW HEIGHT OF NEW CEILINGS AS REQUIRED. COORDINATE CEILING HEIGHTS WITH ARCHITECTURAL PLANS.
13. EXTEND EXISTING INSTALLATIONS USING MATERIALS AND METHODS COMPATIBLE WITH EXISTING ELECTRICAL INSTALLATIONS, OR AS SPECIFIED.
14. CLEAN AND REPAIR EXISTING MATERIALS AND EQUIPMENT WHICH REMAIN OR ARE TO BE REUSED AS REQUIRED.
15. CLEAN EXPOSED SURFACES OF EXISTING PANELBOARDS AND CHECK TIGHTNESS OF ELECTRICAL CONNECTIONS. REPLACE DAMAGED CIRCUIT BREAKERS AND PROVIDE CLOSURE PLATES FOR VACANT POSITIONS. PROVIDE NEW LABELING AND TYPED CIRCUIT DIRECTORY SHOWING REVISED CIRCUITING ARRANGEMENT AS REQUIRED.
16. EXISTING LIGHTING FIXTURES SCHEDULED FOR REUSE SHALL BE CLEANED AS REQUIRED. REPLACE LAMPS, BALLASTS AND BROKEN ELECTRICAL PARTS AS REQUIRED.
17. ALL EXISTING ELECTRICAL EQUIPMENT AND ASSOCIATED WIRING, CONDUIT, ETC. NOT SHOWN ON DRAWINGS OR ADDRESSED BY NOTES ABOVE SHALL BE CONSIDERED EXISTING TO REMAIN.

## DEMOLITION LEGEND

| Symbol | Description |
|---|---|
| ETR | "ETR" DENOTES EXISTING ELECTRICAL DEVICE WHICH IS TO REMAIN. |
| ETD | "ETD" DENOTES EXISTING ELECTRICAL DEVICE WHICH IS TO BE DEMOLISHED. PULL BACK WIRING AND CONDUIT BACK TO NEXT ACTIVE OUTLET OR POWER SOURCE. |
| ETRL | "ETRL" DENOTES EXISTING ELECTRICAL DEVICE TO BE DISCONNECTED AND RELOCATED. EXISTING CIRCUIT SHALL BE EXTENDED AS REQUIRED TO NEW LOCATION OF EXISTING ELECTRICAL DEVICE. |
| RL | "RL" DENOTES NEW LOCATION OF RELOCATED EXISTING ELECTRICAL DEVICE. |
| ETRP | "ETRP" DENOTES EXISTING DEVICE TO BE REMOVED AND REPLACED. EXISTING CIRCUIT/WIRING AND BACK BOX SHALL REMAIN. NEW DEVICE SHALL BE LOCATED IN PLACE. |
| RP | "RP" DENOTES REPLACED DEVICE. |

# JOSLIN RECREATION CENTER - CPF RENOVATION

17 Hyatt St., Providence, RI 2909

Owner:
City of Providence, Dept. of Public Property
25 Dorrance Street
Providence, Rhode Island 02903


ROWSE Architects
400 Massasoit Avenue
Suite 300, Second Floor
East Providence, Rhode Island
p. (401) 331-9200

2 Hampshire Street
Suite 106, First Floor
Foxboro, Massachusetts
p. (774) 215-0290

rowse@rowsearchitects.com



OWNERSHIP AND USE OF DOCUMENTS, DRAWINGS AND SPECIFICATIONS AS INSTRUMENTS OF PROFESSIONAL SERVICE, ARE, AND SHALL REMAIN, THE PROPERTY OF THE ARCHITECT. THESE DOCUMENTS ARE NOT TO BE USED, IN WHOLE OR IN PART, FOR ANY OTHER PROJECTS OR PURPOSES, OR BY ANY OTHER PARTIES THAN THOSE PROPERLY AUTHORIZED BY CONTRACT WITHOUT THE EXPRESS AUTHORIZATION OF THE ARCHITECT.



B|E|R
BUILDING ENGINEERING RESOURCES, INC.

66 Main Street
N. Easton, MA 02356
T 508.230.0260
F 508.230.0265
ber@ber-engineering.com

Office Commons 95
351 Centerville Road
Warwick, RI 02886
T 401.384.7682
www.ber-engineering.com


## GENERAL NOTES

1. CONTRACTOR SHALL VISIT SITE, PRIOR TO BID, AND CAREFULLY INVESTIGATE AND EXAMINE THE AREA OF WORK SO AS TO SATISFY HIMSELF AS TO THE NATURE AND LOCATION OF THE WORK. CONTRACTOR TO NOTE THE CHARACTER, QUALITY, QUANTITIES OF MATERIALS REQUIRED AND DIFFICULTIES TO BE ENCOUNTERED, THE KIND AND EXTENT OF EQUIPMENT AND FACILITIES NEEDED FOR PERFORMANCE OF THE WORK AND OTHER ITEMS WHICH MAY, IN ANY WAY, AFFECT THE WORK OR CONTRACTOR'S PERFORMANCE.

2. DRAWINGS DO NOT INCLUDE NECESSARY COMPONENTS FOR CONSTRUCTION SAFETY.

**Date:** 05/05/2025
**Drawn by:** DD/DC **Proj. Mgr.:** ARV

**Revisions**

| No. | Date | Description |
|---|---|---|
| | | |

ELECTRICAL LEGEND, NOTES, & ABBREVIATIONS

# E0.00



BER# 24098

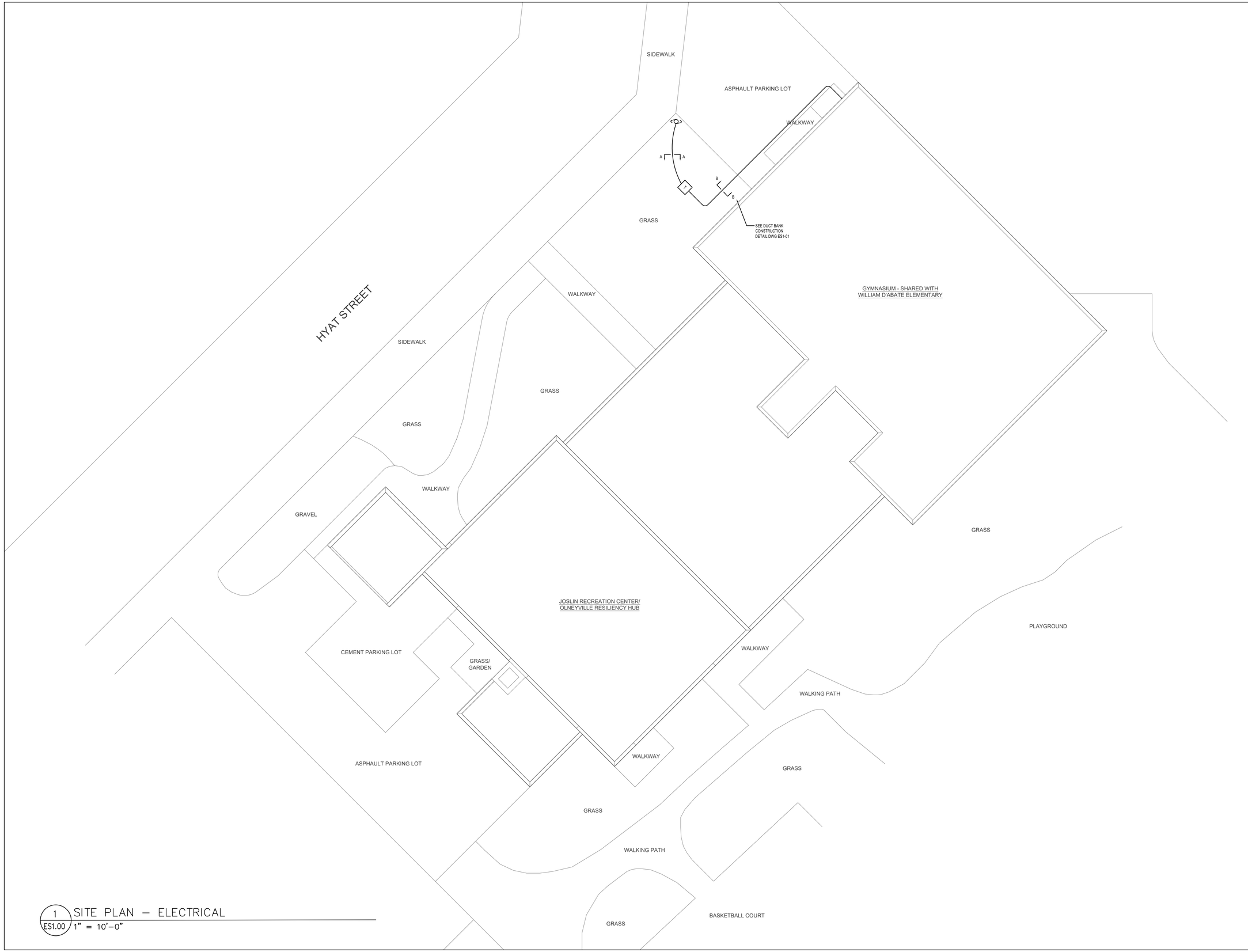


1 / ES1.00 SITE PLAN – ELECTRICAL
1" = 10'-0"

# JOSLIN RECREATION CENTER - CPF RENOVATION

17 Hyatt St., Providence, RI 2909

Owner:
City of Providence, Dept. of Public Property
25 Dorrance Street
Providence, Rhode Island 02903


ROWSE Architects
400 Massasoit Avenue
Suite 300, Second Floor
East Providence, Rhode Island
p. (401) 331-9200

2 Hampshire Street
Suite 106, First Floor
Foxboro, Massachusetts
p. (774) 215-0290
rowse@rowsearchitects.com



**OWNERSHIP AND USE OF DOCUMENTS, DRAWINGS AND SPECIFICATIONS AS INSTRUMENTS OF PROFESSIONAL SERVICE, ARE, AND SHALL REMAIN, THE PROPERTY OF THE ARCHITECT. THESE DOCUMENTS ARE NOT TO BE USED, IN WHOLE OR IN PART, FOR ANY OTHER PROJECTS OR PURPOSES, OR BY ANY OTHER PARTIES THAN THOSE PROPERLY AUTHORIZED BY CONTRACT WITHOUT THE EXPRESS AUTHORIZATION OF THE ARCHITECT.**



B|E|R
BUILDING ENGINEERING RESOURCES, INC.
66 Main Street
N. Easton, MA 02356
T 508.230.0260
F 508.230.0265
ber@ber-engineering.com

Office Commons 95
351 Centerville Road
Warwick, RI 02886
T 401.384.7682
www.ber-engineering.com


## GENERAL NOTES

1. CONTRACTOR SHALL VISIT SITE, PRIOR TO BID, AND CAREFULLY INVESTIGATE AND EXAMINE THE AREA OF WORK SO AS TO SATISFY HIMSELF AS TO THE NATURE AND LOCATION OF THE WORK. CONTRACTOR TO NOTE THE CHARACTER, QUALITY, QUANTITIES OF MATERIALS REQUIRED AND DIFFICULTIES TO BE ENCOUNTERED. THE KIND AND EXTENT OF EQUIPMENT AND FACILITIES NEEDED FOR PERFORMANCE OF THE WORK AND OTHER ITEMS WHICH MAY, IN ANY WAY, AFFECT THE WORK OR CONTRACTOR'S PERFORMANCE.

2. DRAWINGS DO NOT INCLUDE NECESSARY COMPONENTS FOR CONSTRUCTION SAFETY.

**Date:** 05/05/2025
**Drawn by:** DD/DC **Proj. Mgr.:** ARV

**Revisions**

| No. | Date | Description |
|---|---|---|
| | | |
| | | |
| | | |
| | | |
| | | |
| | | |
| | | |
| | | |

## ELECTRICAL SITE PLAN

# ES1.00



BER# 24091

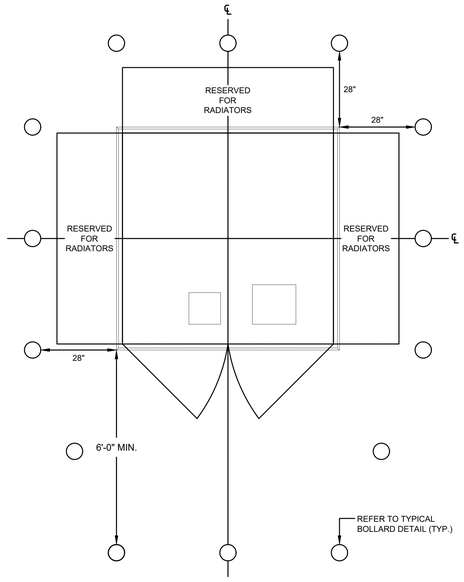


10'-0" MINIMUM CLEAR SPACE FROM FRONT OF PAD

NOTES:
1. UTILITY COMPANY DESIGN/PLANNING SHALL DESIGNATE THE NUMBER AND LOCATION OF BOLLARDS.
2. LOCATION OF BOLLARDS SHALL NOT IMPEDE A DOOR OPENING 100 DEGREES.
3. SPACING SHALL NOT EXCEED 5'-0" BETWEEN EACH BOLLARD.
4. THIS DETAIL IS FOR BIDDING PURPOSES ONLY. CONFORM TO UTILITY COMPANY DETAILS.

# TRANSFORMER BOLLARD PLACEMENT DETAIL — NTS

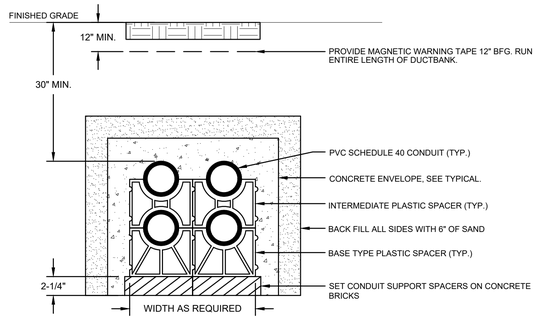


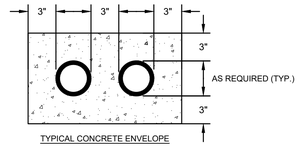


TYPICAL CONCRETE ENVELOPE

NOTES:
1. PRIOR TO INSTALLATION AND BACKFILL THE DUCTBANK CROSS SECTION AND TRENCH MUST BE COORDINATED, INSPECTED, AND APPROVED BY THE UTILITY COMPANY.
2. ALL TRENCHING, CONCRETE WORK, BACKFILLING, GRADING, AND RESURFACING SHALL BE PROVIDED BY THE GENERAL CONTRACTOR.
3. ALL SWEEPS AT FOUNDATION AND RISER SHALL BE RIGID STEEL CONDUIT WITH A MINIMUM RADIUS OF 3"-0".
4. DIRECT-BURIED CONDUIT SHALL BE INSTALLED TO MEET THE MINIMUM COVER REQUIREMENTS OF NEC TABLE 300.5 AND 300.50.
5. THERE SHALL NOT BE MORE THAN THE EQUIVALENT OF FOUR 90° BENDS (360° TOTAL) BETWEEN PULL POINTS (NEC 352.26), BEND RADIUS SHALL NOT BE LESS THAN SHOWN IN TABLE 2, CHAPTER 9 OF THE NEC.
6. MINIMUM PITCH OF CONDUITS SHALL BE 3" PER ONE 100'-0". PITCH OF DUCTS SHALL CAUSE ALL DUCTS TO DRAIN TOWARD ONE END OR BOTH EQUIPMENT FOUNDATIONS OR PULL BOXES.
7. ALL BASE AND INTERMEDIATE PLASTIC SPACERS SHALL BE INTERLOCKING TYPE, CONSTRUCTED OF HIGH IMPACT PVC. SPACERS SHALL INSTALLED A MAXIMUM OF 5'-0" APART ALONG ENTIRE LENGTH OF RUN.
8. ELECTRIC UTILITY DUCTBANK SHALL NOT SHARE A CONCRETE ENCASEMENT WITH FOREIGN UTILITIES. ELECTRIC UTILITY CONDUIT SHALL NOT BE DIRECTLY ABOVE OR BELOW TELECOMMUNICATION CONDUIT OR WATER, GAS, AND SEWER UTILITIES EXCEPT WHEN CROSSING AT APPROXIMATELY RIGHT ANGLES. WHERE THE PATHS OF THESE UTILITIES CROSS, TELECOMMUNICATIONS CONDUIT SHALL BE SEPARATED BY A MINIMUM OF 3" OF CONCRETE AND THE MINIMUM VERTICAL SEPARATION OF WATER, GAS, AND SEWER UTILITIES SHALL BE 12". A MINIMUM SEPARATION OF 12" SHALL BE MAINTAINED WHEN TELECOMMUNICATIONS CONDUIT RUNS PARALLEL TO ELECTRIC UTILITY CONDUIT. A MINIMUM SEPARATION OF 24" SHALL BE MAINTAINED WHEN WATER, GAS, AND SEWER UTILITIES RUN PARALLEL TO ELECTRIC UTILITY CONDUIT.
9. ELECTRICAL CONTRACTOR SHALL MANDREL ALL PRIMARY CONDUITS TO ENSURE THEIR INTEGRITY AND PROVIDE PULL ROPE IN EACH CONDUIT RUN, INCLUDING RISERS AND SPARES. ALL SPARE CONDUITS SHALL BE PLUGGED.
10. DETAIL IS SHOWN FOR BIDDING PURPOSES ONLY. REFER TO SPECIFICATIONS FOR ADDITIONAL INFORMATION AND COORDINATE EXACT SPECIFICATIONS WITH THE UTILITY COMPANY.

# TYPICAL DUCTBANK CONSTRUCTION DETAIL — NTS

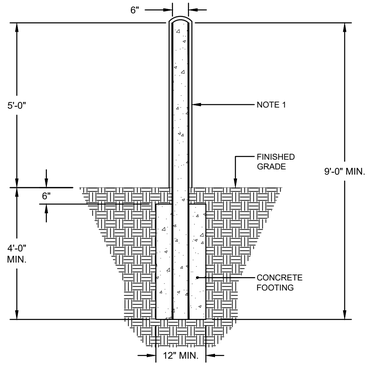


NOTES:
1. CONCRETE FILLED 6" RIGID GALVANIZED STEEL PIPE. CONCRETE SHALL BE CROWNED ON TOP OF ALL BOLLARDS. WHEN BOLLARDS CAN NOT BE PAINTED PROVIDE PROTECTIVE BOLLARD COVER EQUAL TO INNOPLAST #BC760YW.
2. FOR BIDDING PURPOSES ONLY. CONFORM TO UTILITY COMPANY STANDARDS.

# TYPICAL BOLLARD DETAIL — NTS

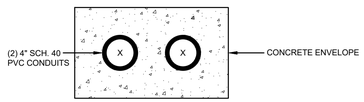


NOTES:
1. REFER TO "TYPICAL DUCTBANK CONSTRUCTION DETAIL".

# DUCTBANK DETAIL "A-A" — NTS

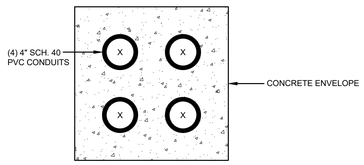


NOTES:
1. REFER TO "TYPICAL DUCTBANK CONSTRUCTION DETAIL".

# DUCTBANK DETAIL "A-A" — NTS

# JOSLIN RECREATION CENTER - CPF RENOVATION

17 Hyatt St., Providence, RI 2909

Owner:
City of Providence, Dept. of Public Property
25 Dorrance Street
Providence, Rhode Island 02903


ROWSE Architects
400 Massasoit Avenue
Suite 300, Second Floor
East Providence, Rhode Island
p. (401) 331-9200

2 Hampshire Street
Suite 106, First Floor
Foxboro, Massachusetts
p. (774) 215-0290
rowse@rowsearchitects.com



OWNERSHIP AND USE OF DOCUMENTS, DRAWINGS AND SPECIFICATIONS AS INSTRUMENTS OF PROFESSIONAL SERVICE, ARE, AND SHALL REMAIN, THE PROPERTY OF THE ARCHITECT. THESE DOCUMENTS ARE NOT TO BE USED, IN WHOLE OR IN PART, FOR ANY OTHER PROJECTS OR PURPOSES, OR BY ANY OTHER PARTIES THAN THOSE PROPERLY AUTHORIZED BY CONTRACT WITHOUT THE EXPRESS AUTHORIZATION OF THE ARCHITECT.



BUILDING ENGINEERING RESOURCES, INC.
66 Main Street
N. Easton, MA 02356
T 508.230.0260
F 508.230.0265
ber@ber-engineering.com

Office Commons 95
351 Centerville Road
Warwick, RI 02886
T 401.384.7682
www.ber-engineering.com


## GENERAL NOTES

1. CONTRACTOR SHALL VISIT SITE, PRIOR TO BID, AND CAREFULLY INVESTIGATE AND EXAMINE THE AREA OF WORK SO AS TO SATISFY HIMSELF AS TO THE NATURE AND LOCATION OF THE WORK, CONTRACTOR TO NOTE THE CHARACTER, QUALITY, QUANTITIES OF MATERIALS REQUIRED AND DIFFICULTIES TO BE ENCOUNTERED, THE KIND AND EXTENT OF EQUIPMENT AND FACILITIES NEEDED FOR PERFORMANCE OF THE WORK AND OTHER ITEMS WHICH MAY, IN ANY WAY, AFFECT THE WORK OR CONTRACTOR'S PERFORMANCE.

2. DRAWINGS DO NOT INCLUDE NECESSARY COMPONENTS FOR CONSTRUCTION SAFETY.

**Date:** 05/05/2025
**Drawn by:** DD/DC **Proj. Mgr.:** ARV

**Revisions**

| No. | Date | Description |
|---|---|---|
| | | |
| | | |
| | | |
| | | |
| | | |
| | | |
| | | |
| | | |

ELECTRICAL DETAILS

ES1.01

#### - ES1.01 — 51 of 87

BER 24005

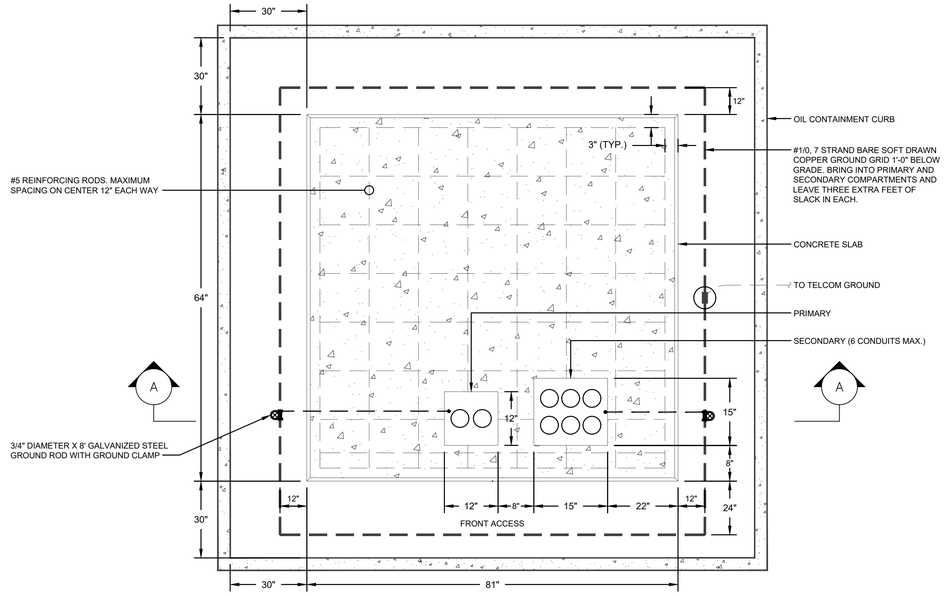


PLAN VIEW

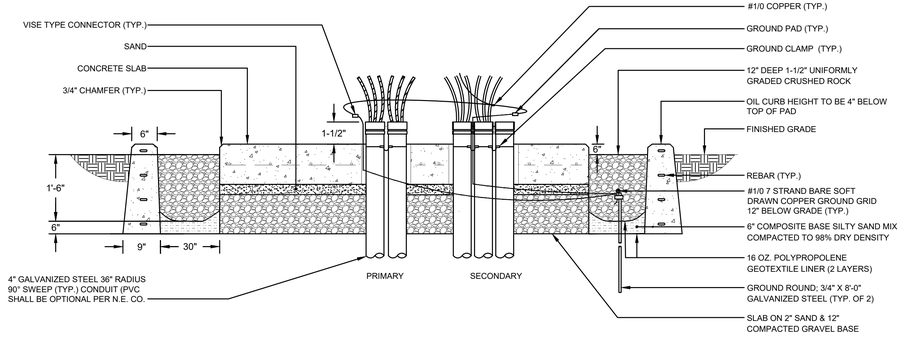


SECTION A-A

NOTES:

1. INSTALL CONDUITS AS INDICATED ON THE SITE PLAN AND ONE-LINE DIAGRAM BEFORE SLAB IS POURED. USE 36" RADIUS BENDS, WITH COUPLINGS, NIPPLES AND BUSHINGS AS REQUIRED. BENDS FOR PRIMARY CABLES SHALL BE GALVANIZED STEEL. TERMINATIONS AND BUSHINGS SHALL BE INSTALLED AFTER THE TRANSFORMER IS PLACED, AND BEFORE THE CABLES ARE PULLED.
2. INSTALL #1/0 7 STRAND BARE SOFT DRAWN COPPER WIRE LOOP 21" BELOW GRADE. BOND TO ALL EXPOSED METALLIC CONDUIT AND LEAVE 3'-0" OF WIRE ABOVE PAD FOR GROUNDING TRANSFORMER AT TWO OPPOSITE POINTS IN THE CABLE CONDUIT OPENINGS. INSTALL TWO 8' GALVANIZED STEEL (3/4") GROUND RODS AND APPROVED CONNECTORS BELOW GROUND. LEAVE GROUND GRID EXPOSED UNTIL INSPECTED BY THE UTILITY COMPANY. CONNECTIONS TO GROUND GRID TO BE MADE PER UTILITY COMPANY REQUIREMENTS. EXOTHERMIC WELDING ("CALDWELD") SHALL BE AN ACCEPTABLE ALTERNATE TO COMPRESSION BOLTED CONNECTIONS.
3. CRUSHED ROCK, GRAVEL AND SAND SHALL BE PLACED PER UTILITY COMPANY STANDARDS. THE GRAVEL, BEING THOROUGHLY COMPACTED, AND THE SAND THOROUGHLY WETTED, JUST BEFORE PLACING THE CONCRETE.
4. INSTALL CONCRETE SLAB IN ACCORDANCE WITH UTILITY COMPANY STANDARDS. ALL EXPOSED EDGES TO HAVE A 3/4" CHAMFER.
5. REINFORCING RODS TO BE #5 AND SHALL CONFORM TO UTILITY COMPANY STANDARDS. REINFORCING RODS TO BE LOCATED IN CENTER OF THE SLAB,12" ON CENTER MINIMUM, WITH A MINIMUM OF 3" CLEARANCE FROM FACE OF CONCRETE.
6. UPON COMPLETION OF THE SLAB, AND THE INSTALLATION OF CONDUIT, FILL THE OPEN AREA AROUND THE CONDUITS WITH CONCRETE AND GROUT AROUND THE CONDUIT TO SEAL THIS AREA.
7. INSTALL CONCRETE OIL CURB IN ACCORDANCE WITH UTILITY COMPANY STANDARDS. REINFORCE WITH (4) 1/2" RODS, SIX INCHES ON CENTER AS SHOWN. BEND RODS AROUND CORNERS. FILL AREA BETWEEN SLAB AND CURB WITH A 1-1/2" UNIFORMLY GRADED CRUSHED ROCK AND LINE WITH 2 LAYERS OF GEOTEXTILE LINER AS SHOWN. GEOTEXTILE LINERS TO BE SEPARATED BY A 6" LAYER OF WELL COMPACTED, SILTY SAND AND GRAVEL MIX. GEOTEXTILE LINE SHALL BE 16 OZ. POLYPROPYLENE GEOTEXTILE - ALL SEAMS TO OVERLAP 12" MINIMUM.
8. MANDREL COMPLETED DUCTS BY PULLING THROUGH AN APPROVED FLEXIBLE MANDREL NO LESS THAN 1/4" SMALLER IN DIAMETER THAN THE INSIDE DIAMETER OF THE DUCT. 2,500 LB PULLING TAPE SHALL BE LEFT IN ALL THE DUCTS, INCLUDING LATERALS.
9. PROVIDE PHYSICAL PROTECTION FOR TRANSFORMER VIA 6" CONCRETE FILLED BOLLARDS 5' ABOVE GRADE, 4' BELOW GRADE. LOCATE BOLLARDS IN ACCORDANCE WITH UTILITY COMPANY STANDARDS.
10. THIS DETAIL IS FOR BIDDING PURPOSES ONLY. CONFORM TO UTILITY COMPANY DETAILS.

| # | TRANSFORMER PAD (75-500KVA) WITH OIL CURB DETAIL | NTS |
|---|---|---|

# JOSLIN RECREATION CENTER - CPF RENOVATION

17 Hyatt St., Providence, RI 2909

Owner:
City of Providence, Dept. of Public Property
25 Dorrance Street
Providence, Rhode Island 02903


ROWSE Architects
400 Massasoit Avenue
Suite 300, Second Floor
East Providence, Rhode Island
p. (401) 331-9200

2 Hampshire Street
Suite 106, First Floor
Foxboro, Massachusetts
p. (774) 215-0290
rowse@rowsearchitects.com



**OWNERSHIP AND USE OF DOCUMENTS, DRAWINGS AND SPECIFICATIONS AS INSTRUMENTS OF PROFESSIONAL SERVICE, ARE, AND SHALL REMAIN, THE PROPERTY OF THE ARCHITECT. THESE DOCUMENTS ARE NOT TO BE USED, IN WHOLE OR IN PART, FOR ANY OTHER PROJECTS OR PURPOSES, OR BY ANY OTHER PARTIES THAN THOSE PROPERLY AUTHORIZED BY CONTRACT WITHOUT THE EXPRESS AUTHORIZATION OF THE ARCHITECT.**



B|E|R
BUILDING ENGINEERING RESOURCES, INC.
66 Main Street
N. Easton, MA 02356
T 508.230.0260
F 508.230.0265
ber@ber-engineering.com

Office Commons 95
351 Centerville Road
Warwick, RI 02886
T 401.384.7682
www.ber-engineering.com


## GENERAL NOTES

1. CONTRACTOR SHALL VISIT SITE, PRIOR TO BID, AND CAREFULLY INVESTIGATE AND EXAMINE THE AREA OF WORK SO AS TO SATISFY HIMSELF AS TO THE NATURE AND LOCATION OF THE WORK. CONTRACTOR TO NOTE THE CHARACTER, QUALITY, QUANTITIES OF MATERIALS REQUIRED AND DIFFICULTIES TO BE ENCOUNTERED. THE KIND AND EXTENT OF EQUIPMENT AND FACILITIES NEEDED FOR PERFORMANCE OF THE WORK AND OTHER ITEMS WHICH MAY, IN ANY WAY, AFFECT THE WORK OR CONTRACTOR'S PERFORMANCE.

2. DRAWINGS DO NOT INCLUDE NECESSARY COMPONENTS FOR CONSTRUCTION SAFETY.

**Date:** 05/05/2025

**Drawn by:** DD/DC **Proj. Mgr.:** ARV

**Revisions**

| No. | Date | Description |
|---|---|---|
| | | |
| | | |
| | | |
| | | |
| | | |
| | | |
| | | |
| | | |

ELECTRICAL DETAILS

# ES1.02



BER# 24091

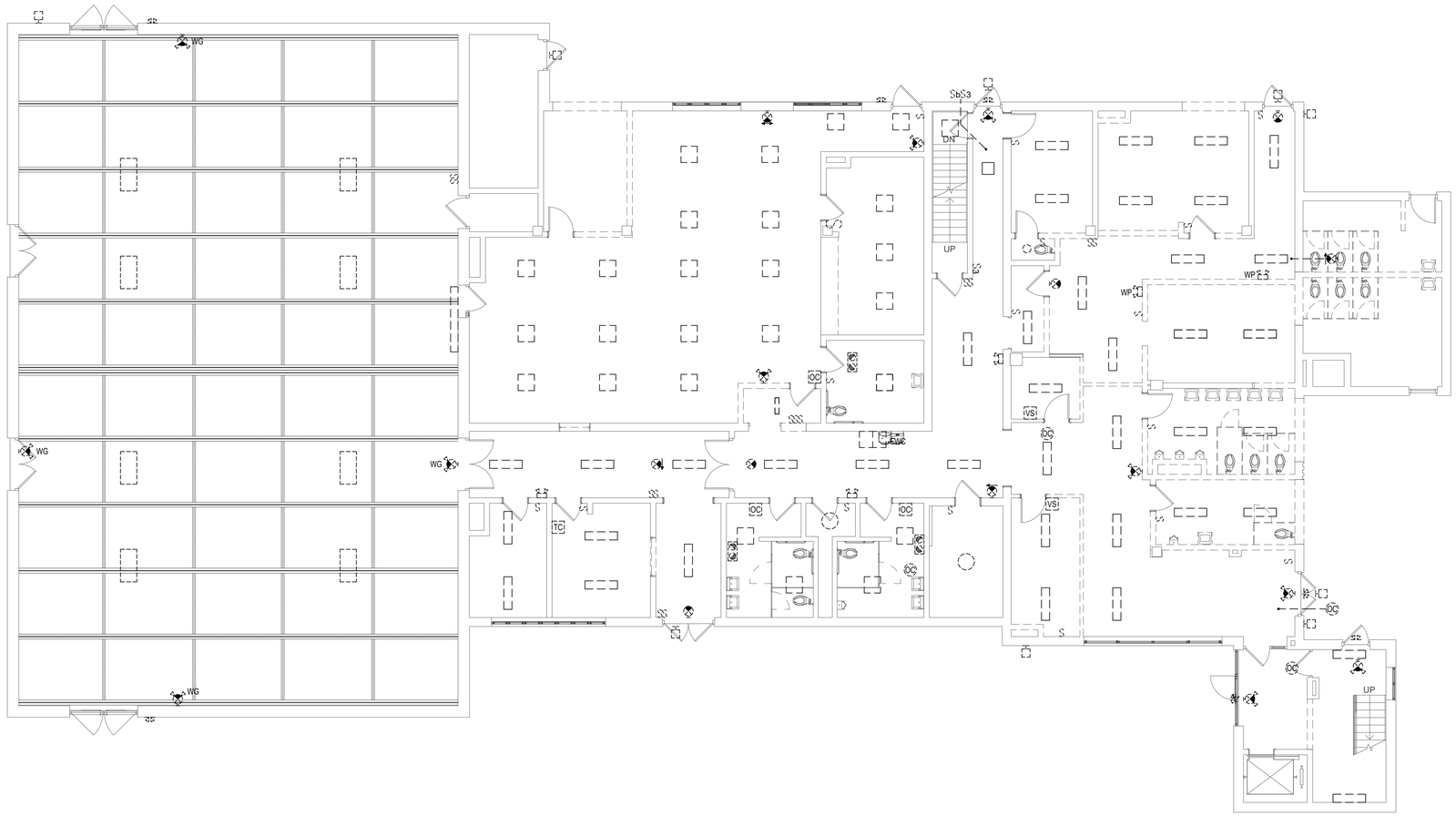


1 ED1.00 FIRST FLOOR DEMOLITION PLAN – LIGHTING
1/8" = 1'–0"

# JOSLIN RECREATION CENTER - CPF RENOVATION

17 Hyatt St., Providence, RI 2909

Owner:
City of Providence, Dept. of Public Property
25 Dorrance Street
Providence, Rhode Island 02903


ROWSE Architects
400 Massasoit Avenue
Suite 300, Second Floor
East Providence, Rhode Island
p. (401) 331-9200

2 Hampshire Street
Suite 106, First Floor
Foxboro, Massachusetts
p. (774) 215-0290

rowse@rowsearchitects.com



**OWNERSHIP AND USE OF DOCUMENTS, DRAWINGS AND SPECIFICATIONS AS INSTRUMENTS OF PROFESSIONAL SERVICE, ARE, AND SHALL REMAIN, THE PROPERTY OF THE ARCHITECT. THESE DOCUMENTS ARE NOT TO BE USED, IN WHOLE OR IN PART, FOR ANY OTHER PROJECTS OR PURPOSES, OR BY ANY OTHER PARTIES THAN THOSE PROPERLY AUTHORIZED BY CONTRACT WITHOUT THE EXPRESS AUTHORIZATION OF THE ARCHITECT.**



B|E|R
BUILDING ENGINEERING RESOURCES, INC.
66 Main Street
N. Easton, MA 02356
T 508.230.0260
F 508.230.0265
ber@ber-engineering.com

Office Commons 95
351 Centerville Road
Warwick, RI 02886
T 401.384.7682
www.ber-engineering.com


## GENERAL NOTES

1. CONTRACTOR SHALL VISIT SITE, PRIOR TO BID, AND CAREFULLY INVESTIGATE AND EXAMINE THE AREA OF WORK SO AS TO SATISFY HIMSELF AS TO THE NATURE AND LOCATION OF THE WORK, CONTRACTOR TO NOTE THE CHARACTER, QUALITY, QUANTITIES OF MATERIALS REQUIRED AND DIFFICULTIES TO BE ENCOUNTERED, THE KIND AND EXTENT OF EQUIPMENT AND FACILITIES NEEDED FOR PERFORMANCE OF THE WORK AND OTHER ITEMS WHICH MAY, IN ANY WAY, AFFECT THE WORK OR CONTRACTOR'S PERFORMANCE.

2. DRAWINGS DO NOT INCLUDE NECESSARY COMPONENTS FOR CONSTRUCTION SAFETY.

**Date:** 05/05/2025
**Drawn by:** DD/DC **Proj. Mgr.:** ARV

**Revisions**

| No. | Date | Description |
|---|---|---|
| | | |
| | | |
| | | |
| | | |
| | | |
| | | |
| | | |
| | | |

ELECTRICAL
FIRST FLOOR DEMOLITION PLAN - LIGHTING

# ED1.00



BER# 24091

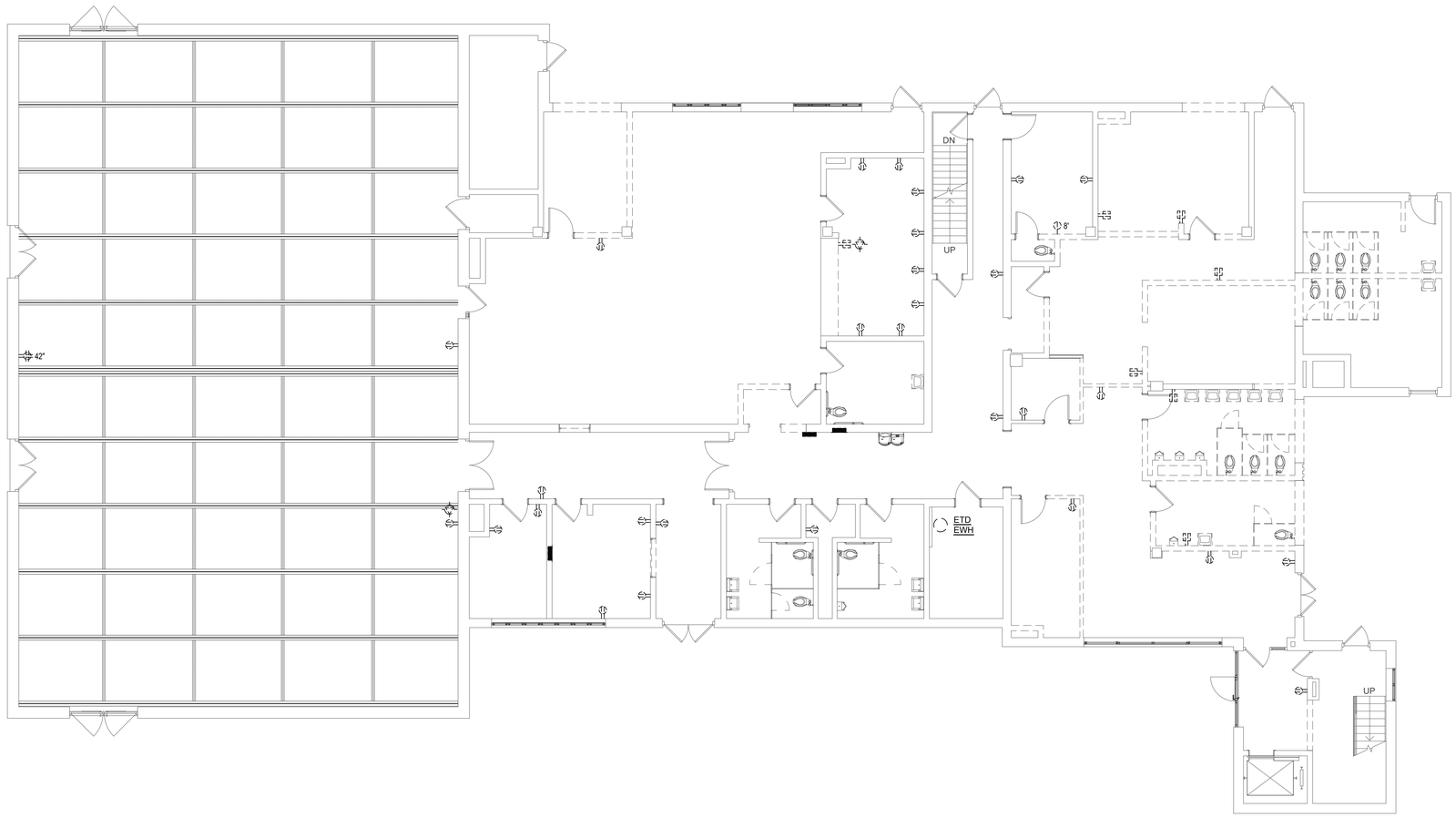


1 ED1.01 FIRST FLOOR DEMOLITION PLAN – POWER
1/8" = 1'–0"

# JOSLIN RECREATION CENTER - CPF RENOVATION

17 Hyatt St., Providence, RI 2909

Owner:
City of Providence, Dept. of Public Property
25 Dorrance Street
Providence, Rhode Island 02903

ROWSE Architects
400 Massasoit Avenue
Suite 300, Second Floor
East Providence, Rhode Island
p. (401) 331-9200

2 Hampshire Street
Suite 106, First Floor
Foxboro, Massachusetts
p. (774) 215-0290
rowse@rowsearchitects.com

**OWNERSHIP AND USE OF DOCUMENTS, DRAWINGS AND SPECIFICATIONS AS INSTRUMENTS OF PROFESSIONAL SERVICE, ARE, AND SHALL REMAIN, THE PROPERTY OF THE ARCHITECT. THESE DOCUMENTS ARE NOT TO BE USED, IN WHOLE OR IN PART, FOR ANY OTHER PROJECTS OR PURPOSES, OR BY ANY OTHER PARTIES THAN THOSE PROPERLY AUTHORIZED BY CONTRACT WITHOUT THE EXPRESS AUTHORIZATION OF THE ARCHITECT.**

B|E|R
BUILDING ENGINEERING RESOURCES, INC.
66 Main Street
N. Easton, MA 02356
T 508.230.0260
F 508.230.0265
ber@ber-engineering.com

Office Commons 95
351 Centerville Road
Warwick, RI 02886
T 401.384.7682
www.ber-engineering.com

## GENERAL NOTES

1. CONTRACTOR SHALL VISIT SITE, PRIOR TO BID, AND CAREFULLY INVESTIGATE AND EXAMINE THE AREA OF WORK SO AS TO SATISFY HIMSELF AS TO THE NATURE AND LOCATION OF THE WORK, CONTRACTOR TO NOTE THE CHARACTER, QUALITY, QUANTITIES OF MATERIALS REQUIRED AND DIFFICULTIES TO BE ENCOUNTERED, THE KIND AND EXTENT OF EQUIPMENT AND FACILITIES NEEDED FOR PERFORMANCE OF THE WORK AND OTHER ITEMS WHICH MAY, IN ANY WAY, AFFECT THE WORK OR CONTRACTOR'S PERFORMANCE.

2. DRAWINGS DO NOT INCLUDE NECESSARY COMPONENTS FOR CONSTRUCTION SAFETY.

**Date:** 05/05/2025
**Drawn by:** DD/DC **Proj. Mgr.:** ARV

**Revisions**

| No. | Date | Description |
|---|---|---|
| | | |
| | | |
| | | |
| | | |
| | | |
| | | |
| | | |

ELECTRICAL
FIRST FLOOR DEMOLITION PLAN - POWER

# ED1.01



BER# 24098

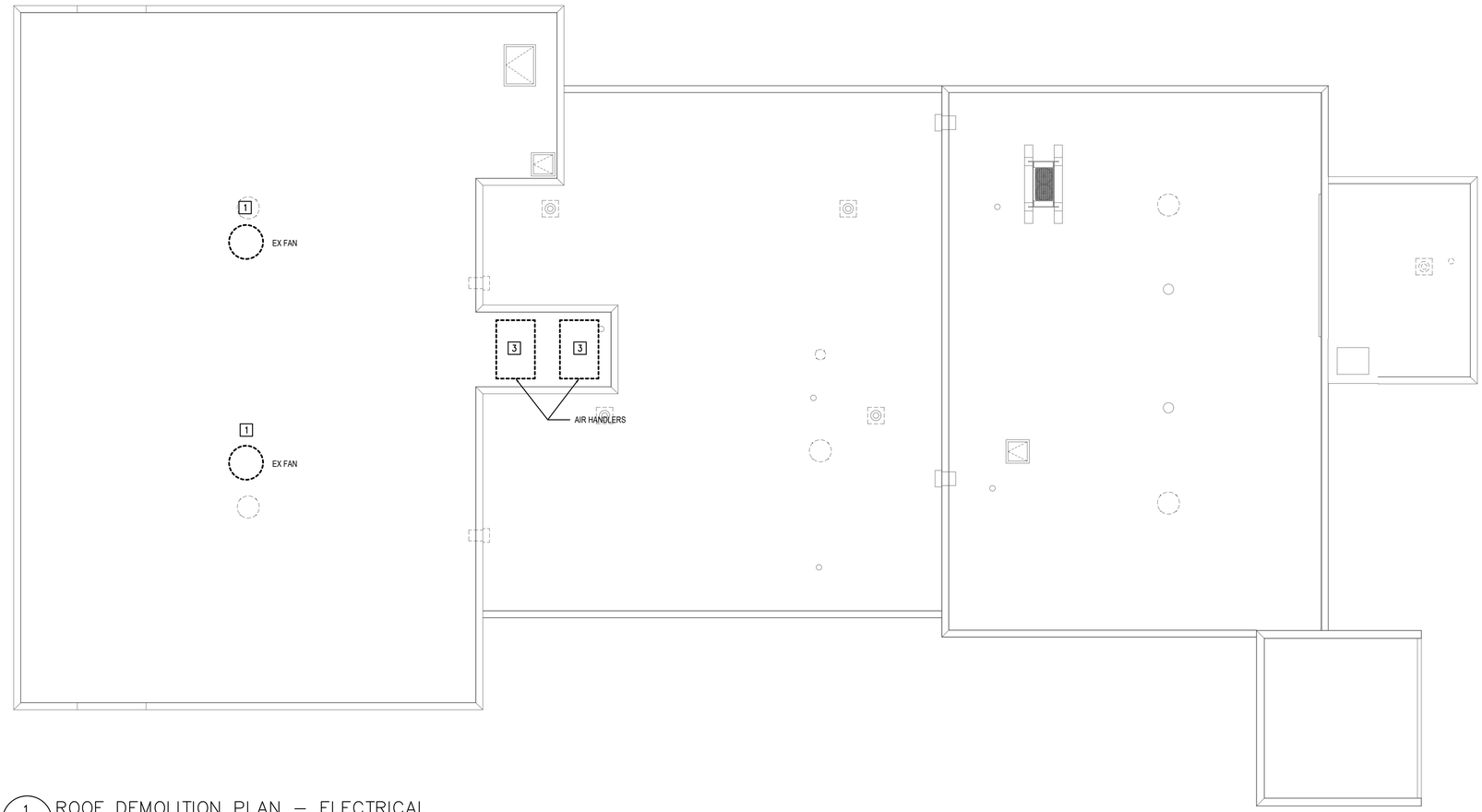


1 / ED1.02 ROOF DEMOLITION PLAN – ELECTRICAL

1/8" = 1'–0"

# JOSLIN RECREATION CENTER - CPF RENOVATION

17 Hyatt St., Providence, RI 2909

Owner:
City of Providence, Dept. of Public Property
25 Dorrance Street
Providence, Rhode Island 02903

ROWSE Architects
400 Massasoit Avenue
Suite 300, Second Floor
East Providence, Rhode Island
p. (401) 331-9200

2 Hampshire Street
Suite 106, First Floor
Foxboro, Massachusetts
p. (774) 215-0290
rowse@rowsearchitects.com

**OWNERSHIP AND USE OF DOCUMENTS, DRAWINGS AND SPECIFICATIONS AS INSTRUMENTS OF PROFESSIONAL SERVICE, ARE, AND SHALL REMAIN, THE PROPERTY OF THE ARCHITECT. THESE DOCUMENTS ARE NOT TO BE USED, IN WHOLE OR IN PART, FOR ANY OTHER PROJECTS OR PURPOSES, OR BY ANY OTHER PARTIES THAN THOSE PROPERLY AUTHORIZED BY CONTRACT WITHOUT THE EXPRESS AUTHORIZATION OF THE ARCHITECT.**

B|E|R
BUILDING ENGINEERING RESOURCES, INC.
66 Main Street
N. Easton, MA 02356
T 508.230.0260
F 508.230.0265
ber@ber-engineering.com

Office Commons 95
351 Centerville Road
Warwick, RI 02886
T 401.384.7682
www.ber-engineering.com

## GENERAL NOTES

1. CONTRACTOR SHALL VISIT SITE, PRIOR TO BID, AND CAREFULLY INVESTIGATE AND EXAMINE THE AREA OF WORK SO AS TO SATISFY HIMSELF AS TO THE NATURE AND LOCATION OF THE WORK, CONTRACTOR TO NOTE THE CHARACTER, QUALITY, QUANTITIES OF MATERIALS REQUIRED AND DIFFICULTIES TO BE ENCOUNTERED, THE KIND AND EXTENT OF EQUIPMENT AND FACILITIES NEEDED FOR PERFORMANCE OF THE WORK AND OTHER ITEMS WHICH MAY, IN ANY WAY, AFFECT THE WORK OR CONTRACTOR'S PERFORMANCE.

2. DRAWINGS DO NOT INCLUDE NECESSARY COMPONENTS FOR CONSTRUCTION SAFETY.

**Date:** 05/05/2025

**Drawn by:** DD/DC **Proj. Mgr.:** ARV

**Revisions**

| No. | Date | Description |
|---|---|---|
| | | |
| | | |
| | | |
| | | |
| | | |
| | | |
| | | |
| | | |

ELECTRICAL
ROOF DEMOLITION PLAN

# ED1.02



BLDG 2490

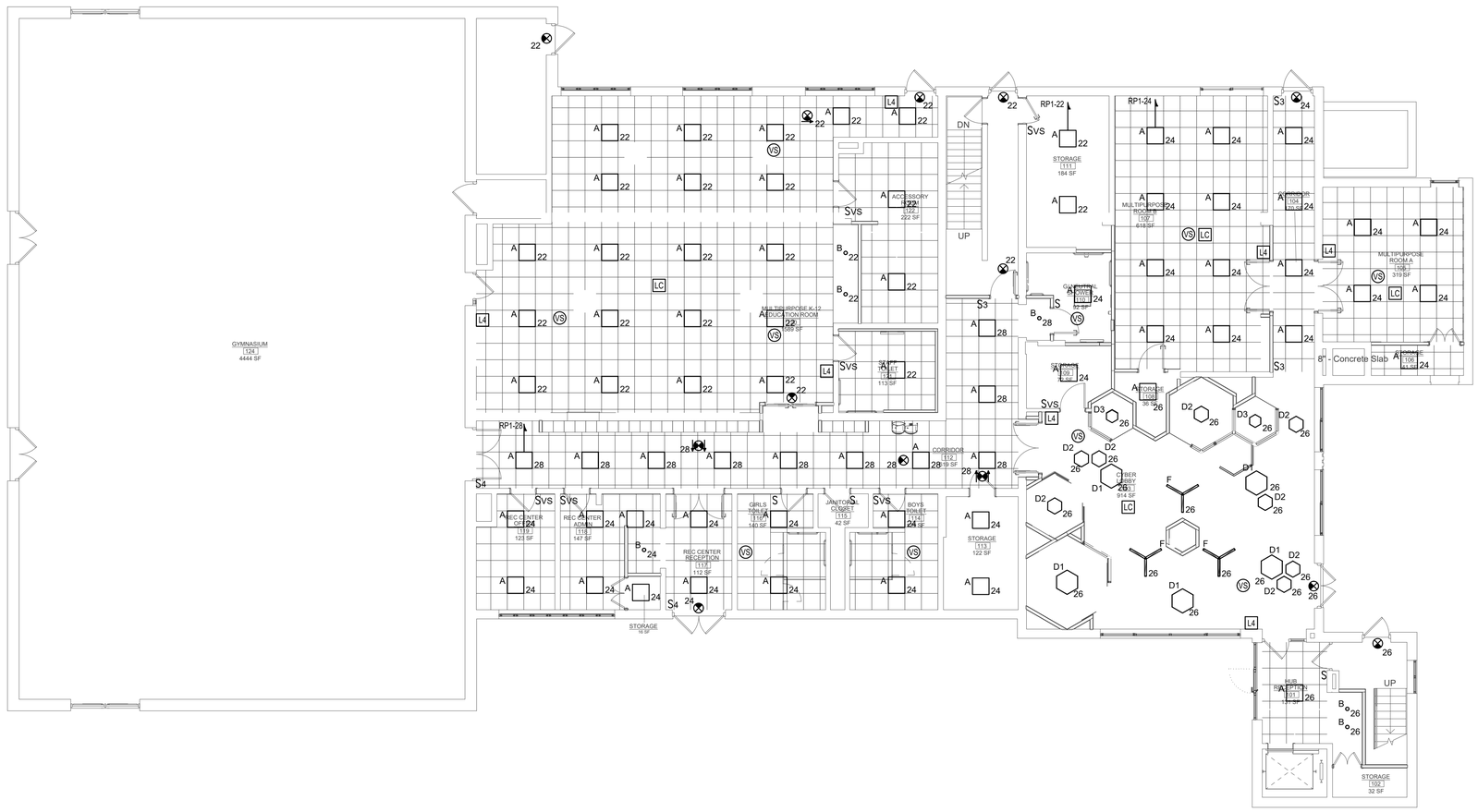


1 E1.00 FIRST FLOOR PLAN – LIGHTING

1/8" = 1'–0"

# JOSLIN RECREATION CENTER - CPF RENOVATION

17 Hyatt St., Providence, RI 2909

Owner:
City of Providence, Dept. of Public Property
25 Dorrance Street
Providence, Rhode Island 02903


ROWSE Architects
400 Massasoit Avenue
Suite 300, Second Floor
East Providence, Rhode Island
p. (401) 331-9200

2 Hampshire Street
Suite 106, First Floor
Foxboro, Massachusetts
p. (774) 215-0290
rowse@rowsearchitects.com



**OWNERSHIP AND USE OF DOCUMENTS, DRAWINGS AND SPECIFICATIONS AS INSTRUMENTS OF PROFESSIONAL SERVICE, ARE, AND SHALL REMAIN, THE PROPERTY OF THE ARCHITECT. THESE DOCUMENTS ARE NOT TO BE USED, IN WHOLE OR IN PART, FOR ANY OTHER PROJECTS OR PURPOSES, OR BY ANY OTHER PARTIES THAN THOSE PROPERLY AUTHORIZED BY CONTRACT WITHOUT THE EXPRESS AUTHORIZATION OF THE ARCHITECT.**



B|E|R
BUILDING ENGINEERING RESOURCES, INC.
66 Main Street
N. Easton, MA 02356
T 508.230.0260
F 508.230.0265
ber@ber-engineering.com

Office Commons 95
351 Centerville Road
Warwick, RI 02886
T 401.384.7682
www.ber-engineering.com


## GENERAL NOTES

1. CONTRACTOR SHALL VISIT SITE, PRIOR TO BID, AND CAREFULLY INVESTIGATE AND EXAMINE THE AREA OF WORK SO AS TO SATISFY HIMSELF AS TO THE NATURE AND LOCATION OF THE WORK. CONTRACTOR TO NOTE THE CHARACTER, QUALITY, QUANTITIES OF MATERIALS REQUIRED AND DIFFICULTIES TO BE ENCOUNTERED. THE KIND AND EXTENT OF EQUIPMENT AND FACILITIES NEEDED FOR PERFORMANCE OF THE WORK AND OTHER ITEMS WHICH MAY, IN ANY WAY, AFFECT THE WORK OR CONTRACTOR'S PERFORMANCE.

2. DRAWINGS DO NOT INCLUDE NECESSARY COMPONENTS FOR CONSTRUCTION SAFETY.

**Date:** 05/05/2025
**Drawn by:** DD/DC **Proj. Mgr.:** ARV

**Revisions**

| No. | Date | Description |
|---|---|---|
| | | |
| | | |
| | | |
| | | |
| | | |
| | | |
| | | |
| | | |

ELECTRICAL
FIRST FLOOR PLAN - LIGHTING

# E1.00



BER# 24098

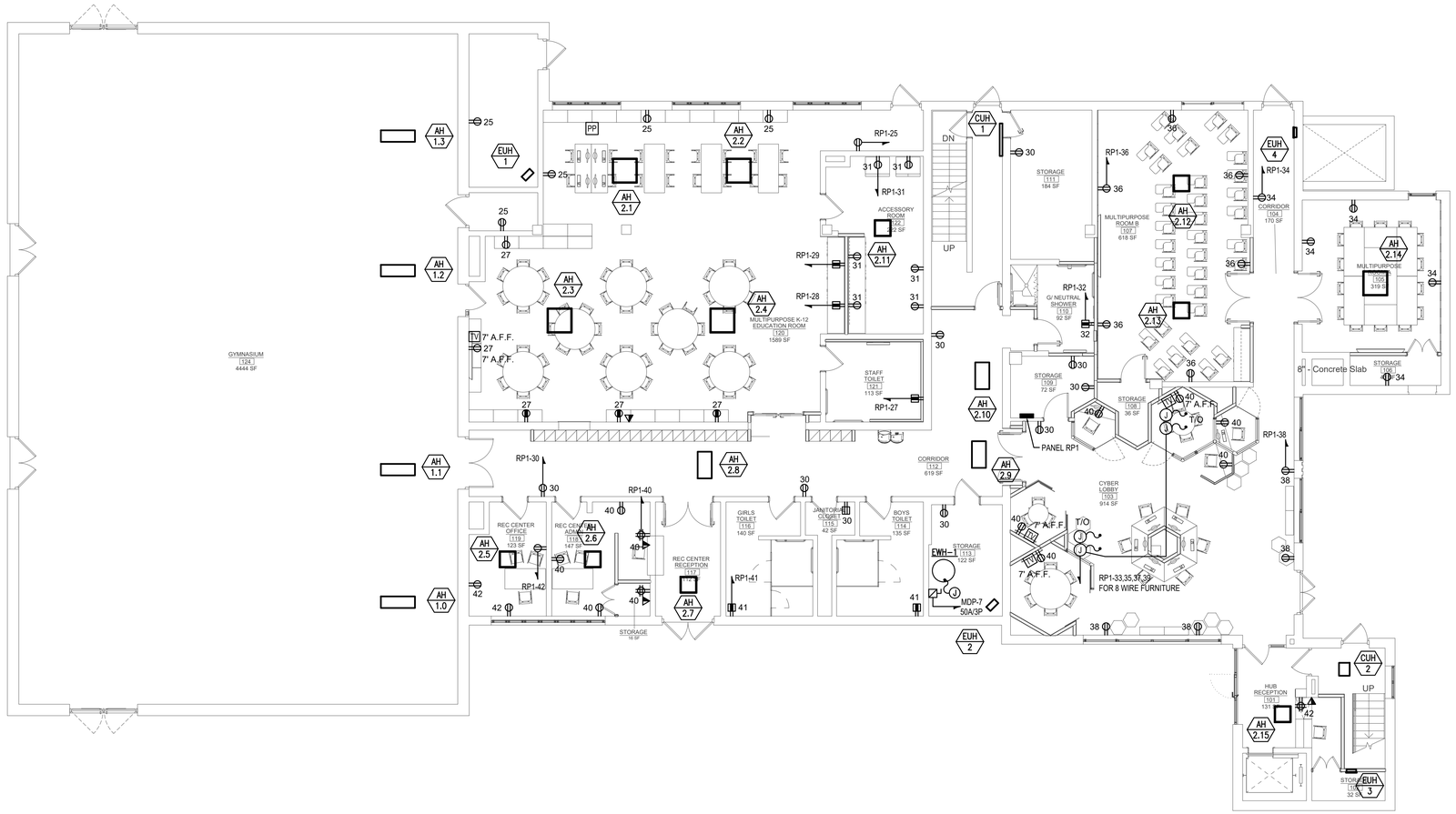


1 E1.01 FIRST FLOOR PLAN – POWER
1/8" = 1'-0"

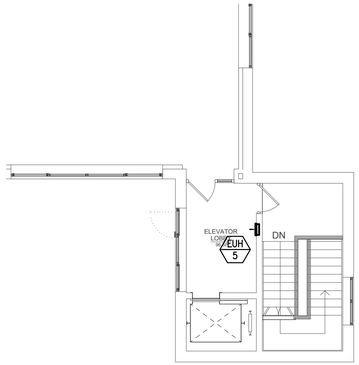


2 E1.01 SECOND FLOOR PART PLAN – POWER
1/8" = 1'-0"

# JOSLIN RECREATION CENTER - CPF RENOVATION

17 Hyatt St., Providence, RI 2909

Owner:
City of Providence, Dept. of Public Property
25 Dorrance Street
Providence, Rhode Island 02903

ROWSE Architects
400 Massasoit Avenue
Suite 300, Second Floor
East Providence, Rhode Island
p. (401) 331-9200

2 Hampshire Street
Suite 106, First Floor
Foxboro, Massachusetts
p. (774) 215-0290

rowse@rowsearchitects.com

OWNERSHIP AND USE OF DOCUMENTS, DRAWINGS AND SPECIFICATIONS AS INSTRUMENTS OF PROFESSIONAL SERVICE, ARE, AND SHALL REMAIN, THE PROPERTY OF THE ARCHITECT. THESE DOCUMENTS ARE NOT TO BE USED, IN WHOLE OR IN PART, FOR ANY OTHER PROJECTS OR PURPOSES, OR BY ANY OTHER PARTIES THAN THOSE PROPERLY AUTHORIZED BY CONTRACT WITHOUT THE EXPRESS AUTHORIZATION OF THE ARCHITECT.

BER
BUILDING ENGINEERING RESOURCES, INC.
66 Main Street
N. Easton, MA 02356
T 508.230.0260
F 508.230.0265
ber@ber-engineering.com
Office Commons 95
351 Centerville Road
Warwick, RI 02886
T 401.384.7682
www.ber-engineering.com

## GENERAL NOTES

1. CONTRACTOR SHALL VISIT SITE, PRIOR TO BID, AND CAREFULLY INVESTIGATE AND EXAMINE THE AREA OF WORK SO AS TO SATISFY HIMSELF AS TO THE NATURE AND LOCATION OF THE WORK. CONTRACTOR TO NOTE THE CHARACTER, QUALITY, QUANTITIES OF MATERIALS REQUIRED AND DIFFICULTIES TO BE ENCOUNTERED, THE KIND AND EXTENT OF EQUIPMENT AND FACILITIES NEEDED FOR PERFORMANCE OF THE WORK AND OTHER ITEMS WHICH MAY, IN ANY WAY, AFFECT THE WORK OR CONTRACTOR'S PERFORMANCE.

2. DRAWINGS DO NOT INCLUDE NECESSARY COMPONENTS FOR CONSTRUCTION SAFETY.

**Date:** 05/05/2025
**Drawn by:** DD/DC **Proj. Mgr.:** ARV

**Revisions**

| No. | Date | Description |
|---|---|---|
| | | |

ELECTRICAL
FIRST FLOOR PLAN - POWER

# E1.01

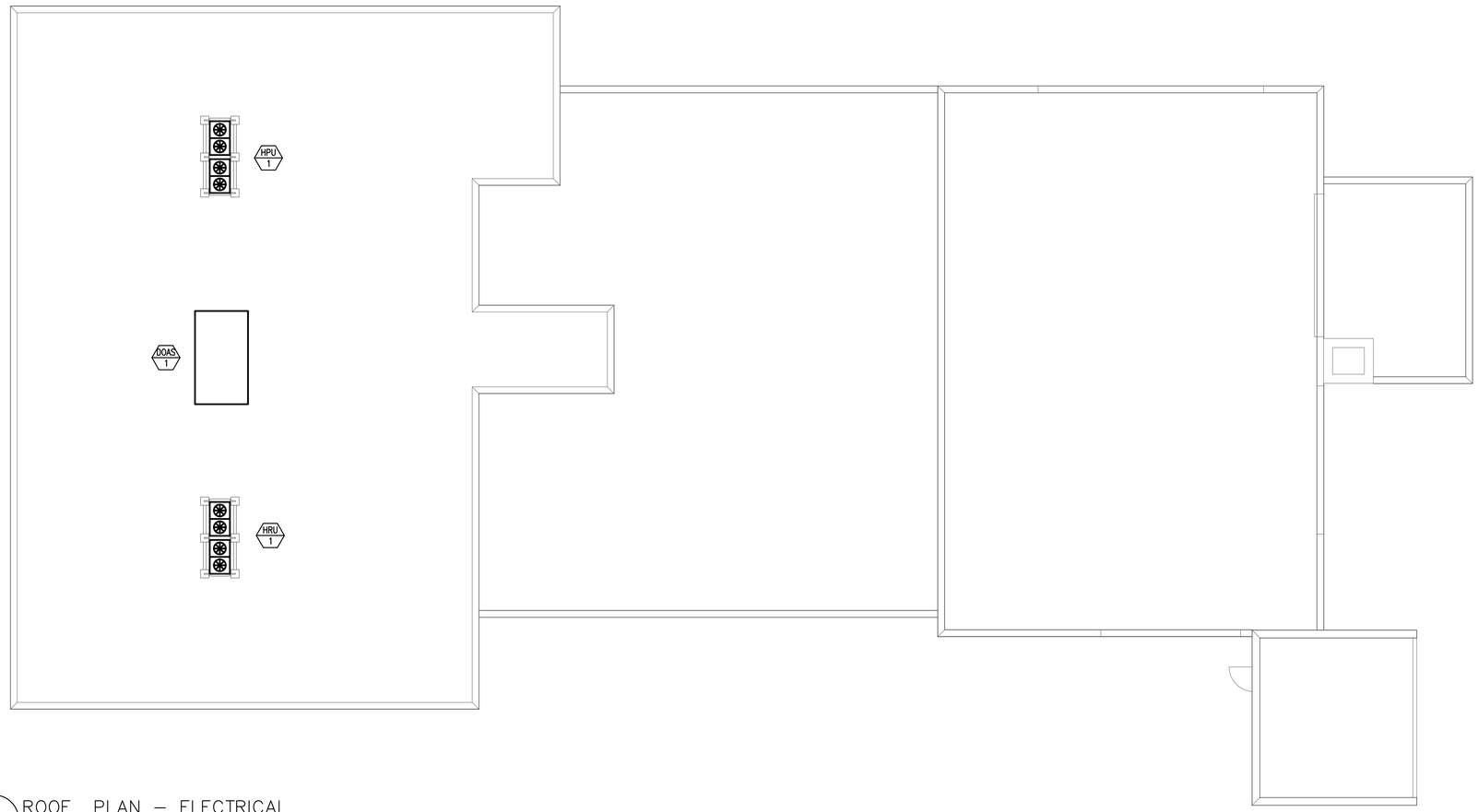


1 / E1.02 ROOF PLAN – ELECTRICAL
1/8" = 1'–0"

# JOSLIN RECREATION CENTER - CPF RENOVATION

17 Hyatt St., Providence, RI 2909

Owner:
City of Providence, Dept. of Public Property
25 Dorrance Street
Providence, Rhode Island 02903

ROWSE Architects
400 Massasoit Avenue
Suite 300, Second Floor
East Providence, Rhode Island
p. (401) 331-9200

2 Hampshire Street
Suite 106, First Floor
Foxboro, Massachusetts
p. (774) 215-0290

rowse@rowsearchitects.com

OWNERSHIP AND USE OF DOCUMENTS, DRAWINGS AND SPECIFICATIONS AS INSTRUMENTS OF PROFESSIONAL SERVICE, ARE, AND SHALL REMAIN, THE PROPERTY OF THE ARCHITECT. THESE DOCUMENTS ARE NOT TO BE USED, IN WHOLE OR IN PART, FOR ANY OTHER PROJECTS OR PURPOSES, OR BY ANY OTHER PARTIES THAN THOSE PROPERLY AUTHORIZED BY CONTRACT WITHOUT THE EXPRESS AUTHORIZATION OF THE ARCHITECT.

B|E|R
BUILDING ENGINEERING RESOURCES, INC.
66 Main Street
N. Easton, MA 02356
T 508.230.0260
F 508.230.0265
ber@ber-engineering.com

Office Commons 95
351 Centerville Road
Warwick, RI 02886
T 401.384.7682
www.ber-engineering.com

## GENERAL NOTES

1. CONTRACTOR SHALL VISIT SITE, PRIOR TO BID, AND CAREFULLY INVESTIGATE AND EXAMINE THE AREA OF WORK SO AS TO SATISFY HIMSELF AS TO THE NATURE AND LOCATION OF THE WORK. CONTRACTOR TO NOTE THE CHARACTER, QUALITY, QUANTITIES OF MATERIALS REQUIRED AND DIFFICULTIES TO BE ENCOUNTERED, THE KIND AND EXTENT OF EQUIPMENT AND FACILITIES NEEDED FOR PERFORMANCE OF THE WORK AND OTHER ITEMS WHICH MAY, IN ANY WAY, AFFECT THE WORK OR CONTRACTOR'S PERFORMANCE.

2. DRAWINGS DO NOT INCLUDE NECESSARY COMPONENTS FOR CONSTRUCTION SAFETY.

**Date:** 05/05/2025
**Drawn by:** DD/DC **Proj. Mgr.:** ARV

**Revisions**

| No. | Date | Description |
|---|---|---|
| | | |

ELECTRICAL
ROOF PLAN

# E1.02



BER# 24095

## SCHEDULE OF MECHANICAL AND PLUMBING EQUIPMENT

| XX / X TAG | DESCRIPTION | EQUIPMENT CHARACTERISTICS | | | | | | | PANEL / CIRCUIT | CIRCUIT BREAKER | FEEDER AND CONDUIT | TYPE OF CONNECTION REQUIRED | | | | | | | | | | | NOTES |
|---|---|---|---|---|---|---|---|---|---|---|---|---|---|---|---|---|---|---|---|---|---|---|---|
| | | FLA | MCA | MOCP | HP | KW | VOLTS | Ø | | | | | CP | VFD | (S) | | | ST | | | | DISCONNECT CONFIGURATION | WP | |
| AH-1.0 | AIR HANDLING UNIT | - | 1.22 | - | - | - | 208 | 1 | RP1-1 | 20/2 | 2#12 + 1#12G. IN 3/4"C. | ✓ | | | | | | ✓ | | | | - | | - |
| AH-1.1 | AIR HANDLING UNIT | - | 1.22 | - | - | - | 208 | 1 | | | 2#12 + 1#12G. IN 3/4"C. | ✓ | | | | | | ✓ | | | | - | | - |
| AH-1.2 | AIR HANDLING UNIT | - | 1.22 | - | - | - | 208 | 1 | | | 2#12 + 1#12G. IN 3/4"C. | ✓ | | | | | | ✓ | | | | - | | - |
| AH-1.3 | AIR HANDLING UNIT | - | 1.22 | - | - | - | 208 | 1 | | | 2#12 + 1#12G. IN 3/4"C. | ✓ | | | | | | ✓ | | | | - | | - |
| AH-2.1 | AIR HANDLING UNIT | - | 0.54 | - | - | - | 208 | 1 | RP1-5 | 20/2 | 2#12 + 1#12G. IN 3/4"C. | ✓ | | | | | | | | | | - | | - |
| AH-2.2 | AIR HANDLING UNIT | - | 0.54 | - | - | - | 208 | 1 | | | 2#12 + 1#12G. IN 3/4"C. | ✓ | | | | | | | | | | - | | - |
| AH-2.3 | AIR HANDLING UNIT | - | 0.54 | - | - | - | 208 | 1 | | | 2#12 + 1#12G. IN 3/4"C. | ✓ | | | | | | | | | | - | | - |
| AH-2.4 | AIR HANDLING UNIT | - | 0.54 | - | - | - | 208 | 1 | | | 2#12 + 1#12G. IN 3/4"C. | ✓ | | | | | | | | | | - | | - |
| AH-2.5 | AIR HANDLING UNIT | - | 0.28 | - | - | - | 208 | 1 | | | 2#12 + 1#12G. IN 3/4"C. | ✓ | | | | | | | | | | - | | - |
| AH-2.6 | AIR HANDLING UNIT | - | 0.28 | - | - | - | 208 | 1 | | | 2#12 + 1#12G. IN 3/4"C. | ✓ | | | | | | | | | | - | | - |
| AH-2.7 | AIR HANDLING UNIT | - | 0.28 | - | - | - | 208 | 1 | RP1-9 | 20/2 | 2#12 + 1#12G. IN 3/4"C. | ✓ | | | | | | | | | | - | | - |
| AH-2.8 | AIR HANDLING UNIT | - | 2.88 | - | - | - | 208 | 1 | | | 2#12 + 1#12G. IN 3/4"C. | ✓ | | | | | | | | | | - | | - |
| AH-2.9 | AIR HANDLING UNIT | - | 4.38 | - | - | - | 208 | 1 | | | 2#12 + 1#12G. IN 3/4"C. | ✓ | | | | | | | | | | - | | - |
| AH-2.10 | AIR HANDLING UNIT | - | 1.75 | - | - | - | 208 | 1 | | | 2#12 + 1#12G. IN 3/4"C. | ✓ | | | | | | | | | | - | | - |
| AH-2.11 | AIR HANDLING UNIT | - | 0.35 | - | - | - | 208 | 1 | RP1-2 | 20/2 | 2#12 + 1#12G. IN 3/4"C. | ✓ | | | | | | | | | | - | | - |
| AH-2.12 | AIR HANDLING UNIT | - | 0.35 | - | - | - | 208 | 1 | | | 2#12 + 1#12G. IN 3/4"C. | ✓ | | | | | | | | | | - | | - |
| AH-2.13 | AIR HANDLING UNIT | - | 0.35 | - | - | - | 208 | 1 | | | 2#12 + 1#12G. IN 3/4"C. | ✓ | | | | | | | | | | - | | - |
| AH-2.14 | AIR HANDLING UNIT | - | 0.39 | - | - | - | 208 | 1 | | | 2#12 + 1#12G. IN 3/4"C. | ✓ | | | | | | | | | | - | | - |
| AH-2.15 | AIR HANDLING UNIT | - | 0.28 | - | - | - | 208 | 1 | | | 2#12 + 1#12G. IN 3/4"C. | ✓ | | | | | | | | | | - | | - |
| BC-1 | BRANCH CIRCUIT CONTROLLER | - | 1.6 | - | - | - | 208 | 1 | | | 2#12 + 1#12G. IN 3/4"C. | ✓ | | | | | | | | | | - | | - |
| CUH-1 | CABINET UNIT HEATER | - | - | - | - | 4.0 | 208 | 3 | RP1-2 | 30/2 | 2#10 + 1#10G. IN 3/4"C. | ✓ | | | | | | ✓ | | | | - | | - |
| CUH-2 | CABINET UNIT HEATER | - | - | - | - | 4.0 | 208 | 3 | RP1-6 | 30/2 | 2#10 + 1#10G. IN 3/4"C. | ✓ | | | | | | ✓ | | | | - | | - |
| DOAS-1 | DEDICATED OUTSIDE AIR UNIT | - | 222.3 | 225 | - | - | 208 | 3 | MDP-5 | 225/3 | 4#4/0 + 1#4G. IN 2-1/2"C. | ✓ | | | ✓ | ✓ | | | ✓ | | | 400/225/3 | ✓ | - |
| EUH-1 | ELECTRIC UNIT HEATER | - | - | - | - | 3.0 | 208 | 1 | RP1-10 | 20/2 | 2#10 + 1#10G. IN 3/4"C. | ✓ | | | | | | ✓ | | | | - | | - |
| EUH-2 | ELECTRIC UNIT HEATER | - | - | - | - | 3.0 | 208 | 1 | RP1-14 | 20/2 | 2#10 + 1#10G. IN 3/4"C. | ✓ | | | | | | ✓ | | | | - | | - |
| EUH-3 | ELECTRIC UNIT HEATER | - | - | - | - | 1.5 | 208 | 1 | RP1-13 | 15/2 | 2#12 + 1#12G. IN 3/4"C. | ✓ | | | | | | | | | | - | | - |
| EUH-4 | ELECTRIC UNIT HEATER | - | - | - | - | 1.5 | 208 | 1 | RP1-17 | 15/2 | 2#12 + 1#12G. IN 3/4"C. | ✓ | | | | | | | | | | - | | - |
| EUH-5 | ELECTRIC UNIT HEATER | - | - | - | - | 1.5 | 208 | 1 | RP1-18 | 15/2 | 2#12 + 1#12G. IN 3/4"C. | ✓ | | | | | | ✓ | | | | - | | - |
| EWH-1 | ELECTRIC WATER HEATER | - | - | - | - | 12.0 | 208 | 3 | MDP-7 | 50/3 | 3#6 + 1#10G. IN 1"C. | ✓ | | | | | | | | | | 60/50/3 | | - |
| HPU-1 | HEAT PUMP UNIT | - | 60 | 100 | - | - | 208 | 3 | MDP-4 | 100/3 | 4#1 + 1#6G. IN 1-1/2"C. | ✓ | | | | ✓ | | | | ✓ | | 100/100/3 | ✓ | - |
| HRU-1 | HEAT RECOVERY UNIT | - | 56/56.0 | 60/60.0 | - | - | 208 | 3 | MDP-2<br>MDP-3 | 60/3<br>60/3 | 3#6 + 1#10G. IN 1"C.<br>3#6 + 1#10G. IN 1"C. | ✓ | | | | ✓ | | | | ✓ | | 60/60/3<br>60/60/3 | ✓ | - |

NOTES:
1. XXX

## LIGHTING FIXTURE SCHEDULE

| TYPE | DESCRIPTION | MANUFACTURER | MODEL NUMBER / SERIES | VOLTS | SOURCE | | | | NOTES |
|---|---|---|---|---|---|---|---|---|---|
| | | | | | TYPE | WATTS | LUMENS | COLOR / TEMP. | |
| A | 2X2 LED TROFFER | WILLIAMS | LT-22-L39/835-AF-QS-DIM-UNV | 120 | LED | 33.1 | - | 35K | -<br>- |
| B | 6" LED DOWNLIGHT | WILLIAMS | 6-FDR-LS-8-CS-DIM-UNV | 120 | LED | 17.6 | - | 35K | -<br>- |
| D1 | DECORATIVE LED PENDANT | BYIBA | UD-S-40-80-30K-DIM-SW-L | 120 | LED | 40 | - | 30K | -<br>- |
| D2 | DECORATIVE LED PENDANT | BYIBA | UD-S-40-80-30K-DIM-SW-M | 120 | LED | 40 | - | - | -<br>- |
| D3 | DECORATIVE LED PENDANT | BYIBA | UD-S-25-80-30K-DIM-SW-S | 120 | LED | 25 | - | - | -<br>- |
| F | DECORATIVE LED PENDANT | COOPER LIGHTING | TO BE DETERMINED BY ARCHITECT | 120 | LED | - | - | - | -<br>- |
| ⊗ | LED EXIT SIGN WITH INTEGRAL BATTERY BACK-UP | EXITRONIX | GVEX-U-WB-WH | 120 | LED | 2 | - | - | -<br>- |
| | EMERGENCY BATTERY UNIT | EXITRONIX | EQMS-R | 120 | LED | 2 | - | - | -<br>- |
| | REMOTE EMERGENCY FIXTURE | EXITRONIX | 2RLI-LJ | 120 | LED | 2 | - | - | -<br>- |

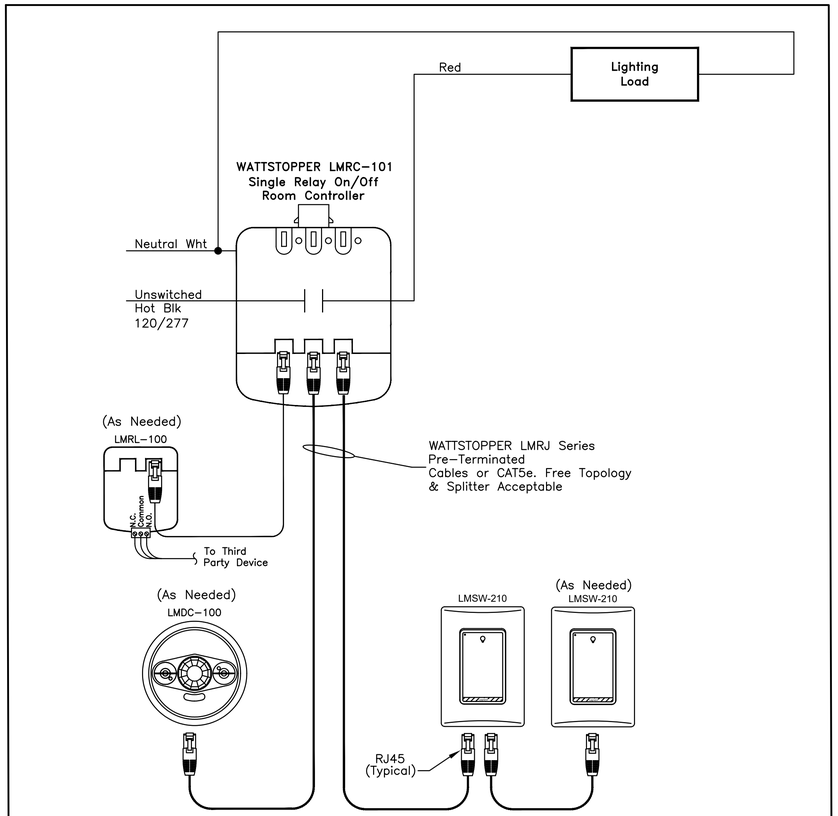


1 TYPICAL SPACE LIGHTING CONTROL DETAIL — NTS

# JOSLIN RECREATION CENTER - CPF RENOVATION

17 Hyatt St., Providence, RI 2909

Owner:
City of Providence, Dept. of Public Property
25 Dorrance Street
Providence, Rhode Island 02903


ROWSE Architects
400 Massasoit Avenue
Suite 300, Second Floor
East Providence, Rhode Island
p. (401) 331-9200

2 Hampshire Street
Suite 106, First Floor
Foxboro, Massachusetts
p. (774) 215-0290
rowse@rowsearchitects.com



OWNERSHIP AND USE OF DOCUMENTS, DRAWINGS AND SPECIFICATIONS AS INSTRUMENTS OF PROFESSIONAL SERVICE, ARE, AND SHALL REMAIN, THE PROPERTY OF THE ARCHITECT. THESE DOCUMENTS ARE NOT TO BE USED, IN WHOLE OR IN PART, FOR ANY OTHER PROJECTS OR PURPOSES, OR BY ANY OTHER PARTIES THAN THOSE PROPERLY AUTHORIZED BY CONTRACT WITHOUT THE EXPRESS AUTHORIZATION OF THE ARCHITECT.



B|E|R
BUILDING ENGINEERING RESOURCES, INC.
66 Main Street
N. Easton, MA 02356
T 508.230.0260
F 508.230.0265
ber@ber-engineering.com

Office Commons 95
351 Centerville Road
Warwick, RI 02886
T 401.384.7682
www.ber-engineering.com


## GENERAL NOTES

1. CONTRACTOR SHALL VISIT SITE, PRIOR TO BID, AND CAREFULLY INVESTIGATE AND EXAMINE THE AREA OF WORK SO AS TO SATISFY HIMSELF AS TO THE NATURE AND LOCATION OF THE WORK. CONTRACTOR TO NOTE THE CHARACTER, QUALITY, QUANTITIES OF MATERIALS REQUIRED AND DIFFICULTIES TO BE ENCOUNTERED, THE KIND AND EXTENT OF EQUIPMENT AND FACILITIES NEEDED FOR PERFORMANCE OF THE WORK AND OTHER ITEMS WHICH MAY, IN ANY WAY, AFFECT THE WORK OR CONTRACTOR'S PERFORMANCE.
2. DRAWINGS DO NOT INCLUDE NECESSARY COMPONENTS FOR CONSTRUCTION SAFETY.

**Date:** 05/05/2025
**Drawn by:** DD/DC **Proj. Mgr.:** ARV
**Revisions**

| No. | Date | Description |
|---|---|---|
| | | |
| | | |
| | | |
| | | |
| | | |
| | | |
| | | |

ELECTRICAL
POWER RISER DIAGRAM & DETAILS

# E2.00



BER# 24095

## KEYED SHEET NOTES

1. 1,000A/3P SERVICE ENTRANCE RATED, 100% RATED MCB WITH LSIG AND ARC FAULT MAINTENANCE SWITCH.
2. PROVIDE TRANSIENT VOLTAGE SURGE SUPPRESSION DEVICE WITH MEDIUM EXPOSURE LEVEL (160KA) EQUAL TO EATON#SPD-160-K. MANUFACTURER OF SURGE PROTECTION DEVICE (SPD) SHALL MATCH THE PANELBOARD MANUFACTURER. PROVIDE 4#6+1#10G. 1"C. VIA 60A/3P CIRCUIT BREAKER TO SPD. EXACT LOCATION SHALL BE DETERMINED IN FIELD. PROVIDE WORKING CLEARANCES IN ACCORDANCE WITH THE NEC.

## PANELBOARD SCHEDULE

| PANEL DESIGNATION | ELECTRICAL CHARACTERISTICS | | | | | | | BRANCH DEVICES | | | | | | | | | | TOTAL POLES | MOUNTING S: SURFACE F: FLUSH | GROUND BUS | TVSS DEVICE | ADDITIONAL BRANCH CIRCUIT BREAKERS | NOTES |
|---|---|---|---|---|---|---|---|---|---|---|---|---|---|---|---|---|---|---|---|---|---|---|---|
| | VOLTS | Ø | WIRE | AIC | BUS SIZE | MAIN | | BKR. POLES | CIRCUIT BREAKER AMPS | | | | | | | | | | | | | | |
| | | | | | | MCB AMPS | MLO AMPS | | 15 | 20 | 25 | 30 | 35 | 40 | 45 | 50 | 60 | 70 | | | | | | |
| RP1 | 120/208 | 3 | 4 | 22K | 225 | 225 | - | 1 | - | 30 | - | - | - | - | - | - | - | - | 60 | S | ✓ | ✓ | - | - |
| | | | | | | | | 2 | 4 | 5 | - | 2 | - | - | - | - | - | - | | | | | | |
| | | | | | | | | 3 | - | - | - | - | - | - | - | - | - | - | | | | | | |

## MAIN DISTRIBUTION PANEL "MDP"

VOLTAGE: 120/208V
BUS RATING (CU): 1000 AMPS
MAINS: 800A MAIN CIRCUIT BREAKER
PHASE: 3
WIRE: 4
AIC: - 65K

| CKT NO | OVERCURRENT DEVICE (AMP) | | | DESCRIPTION OF LOAD | REMARKS | CONNECTED LOAD (kW) |
|---|---|---|---|---|---|---|
| | FRAME | TRIP | POLES | | | |
| 1 | 400 | 400 | 3 | EXISTING 400A MDP BACKFEED | SEE RISER DIAGRAM DWG E2.01 | - |
| 2 | 125 | 60 | 3 | HRU-1 SECTION 1 | SEE MECHANICAL SCHEDULE DWG E2.00 | - |
| 3 | 125 | 60 | 3 | HRU-1 SECTION 2 | SEE MECHANICAL SCHEDULE DWG E2.00 | - |
| 4 | 125 | 100 | 3 | HPU-1 | SEE MECHANICAL SCHEDULE DWG E2.00 | - |
| 5 | 225 | 225 | 3 | DOAS-1 | SEE MECHANICAL SCHEDULE DWG E2.00 | - |
| 6 | 225 | 225 | 3 | PANEL RP-1 | SEE RISE DIAGRAM DWG E2.01 | - |
| 7 | 125 | 50 | 3 | EWH-1 | SEE MECHANICAL SCHEDULE DWG E2.00 | - |
| 8 | 125 | 100 | 3 | - | - | - |
| 9 | 100 | 60 | 3 | SPARE | - | - |
| 10 | 100 | 30 | 3 | SPARE | - | - |
| 11 | " | " | " | SPACE & PROVISIONS | - | - |
| 12 | " | " | " | SPACE & PROVISIONS | - | - |
| 13 | " | " | " | SPACE & PROVISIONS | - | - |
| 14 | " | " | " | SPACE & PROVISIONS | - | - |

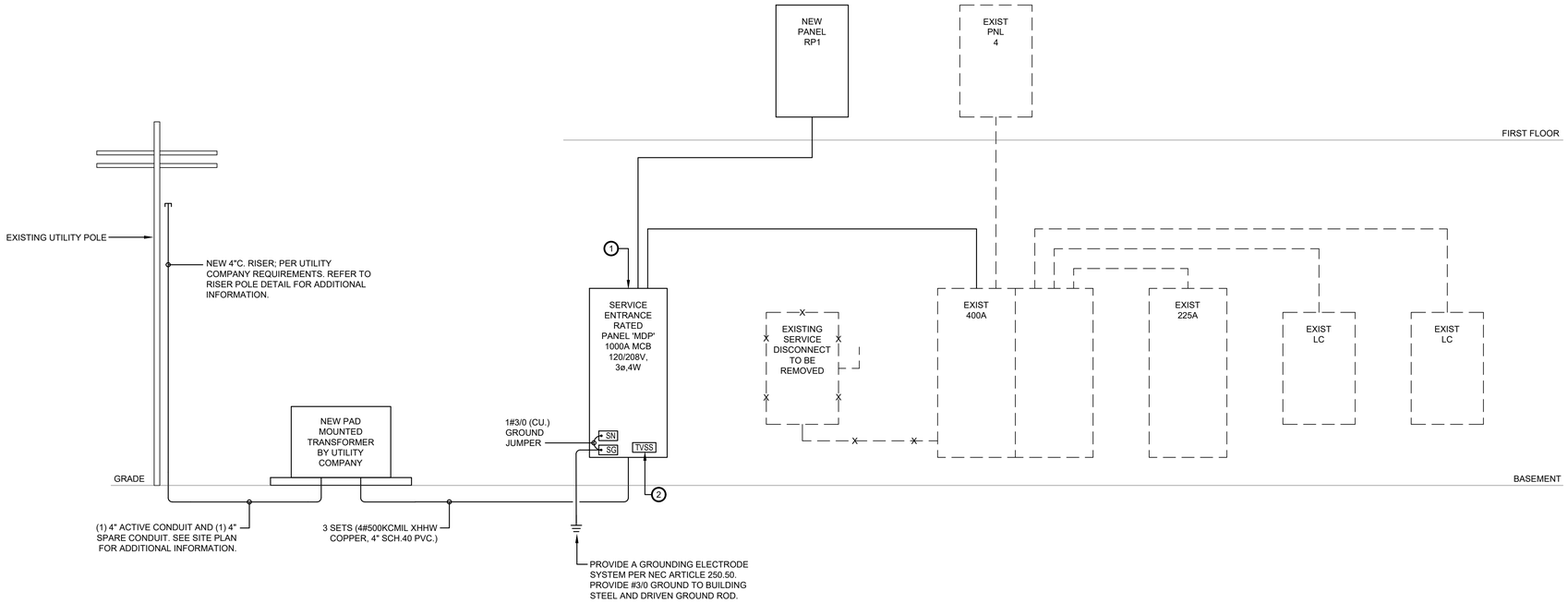


1 / E2.01 POWER RISER DIAGRAM
NTS

# JOSLIN RECREATION CENTER - CPF RENOVATION

17 Hyatt St., Providence, RI 2909

Owner:
City of Providence, Dept. of Public Property
25 Dorrance Street
Providence, Rhode Island 02903


ROWSE Architects
400 Massasoit Avenue
Suite 300, Second Floor
East Providence, Rhode Island
p. (401) 331-9200

2 Hampshire Street
Suite 106, First Floor
Foxboro, Massachusetts
p. (774) 215-0290
rowse@rowsearchitects.com



**OWNERSHIP AND USE OF DOCUMENTS, DRAWINGS AND SPECIFICATIONS AS INSTRUMENTS OF PROFESSIONAL SERVICE, ARE, AND SHALL REMAIN, THE PROPERTY OF THE ARCHITECT. THESE DOCUMENTS ARE NOT TO BE USED, IN WHOLE OR IN PART, FOR ANY OTHER PROJECTS OR PURPOSES, OR BY ANY OTHER PARTIES THAN THOSE PROPERLY AUTHORIZED BY CONTRACT WITHOUT THE EXPRESS AUTHORIZATION OF THE ARCHITECT.**



B|E|R
BUILDING ENGINEERING RESOURCES, INC.
66 Main Street
N. Easton, MA 02356
T 508.230.0260
F 508.230.0265
ber@ber-engineering.com

Office Commons 95
351 Centerville Road
Warwick, RI 02886
T 401.384.7682
www.ber-engineering.com


## GENERAL NOTES

1. CONTRACTOR SHALL VISIT SITE, PRIOR TO BID, AND CAREFULLY INVESTIGATE AND EXAMINE THE AREA OF WORK SO AS TO SATISFY HIMSELF AS TO THE NATURE AND LOCATION OF THE WORK. CONTRACTOR TO NOTE THE CHARACTER, QUALITY, QUANTITIES OF MATERIALS REQUIRED AND DIFFICULTIES TO BE ENCOUNTERED, THE KIND AND EXTENT OF EQUIPMENT AND FACILITIES NEEDED FOR PERFORMANCE OF THE WORK AND OTHER ITEMS WHICH MAY, IN ANY WAY, AFFECT THE WORK OR CONTRACTOR'S PERFORMANCE.
2. DRAWINGS DO NOT INCLUDE NECESSARY COMPONENTS FOR CONSTRUCTION SAFETY.

**Date:** 05/05/2025
**Drawn by:** DD/DC **Proj. Mgr.:** ARV

**Revisions**

| No. | Date | Description |
|---|---|---|
| | | |
| | | |
| | | |
| | | |
| | | |
| | | |
| | | |
| | | |

ELECTRICAL
POWER RISER DIAGRAM & DETAILS

# E2.01



BER# 24001

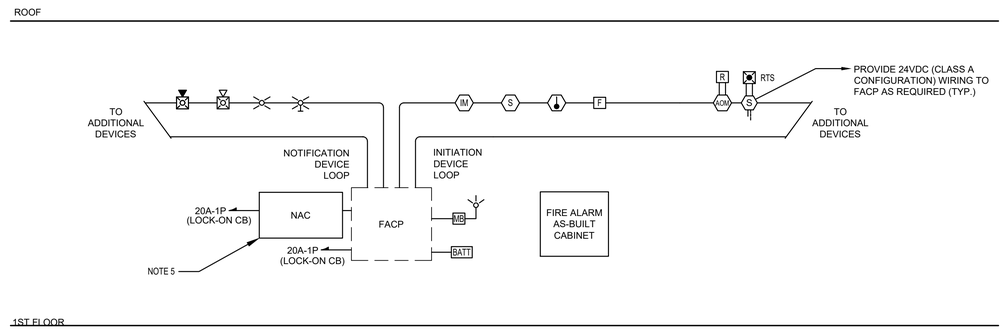


1 FA0.00 PARTIAL FIRE ALARM RISER DIAGRAM

NOT TO SCALE

## FIRE ALARM SYSTEM

FIRE ALARM SYSTEM:
ALL NOTIFICATION DEVICES SHALL BE MOUNTED 80" AFF, UNLESS OTHERWISE NOTED. THE FOLLOWING DESIGNATIONS SHALL APPLY TO ALL FIRE ALARM DEVICES:

AC = ABOVE CEILING
C = CEILING MOUNTED
LF = LOW FREQUENCY
WG = WIRE GUARD
WP = WEATHERPROOF

| | |
|---|---|
| F | MANUAL PULL STATION; MOUNTED 48" AFF |
| K | ACCESS FEATURE-FIRE DEPARTMENT KEY REPOSITORY. |
| BATT | BATTERY CABINET |
| FACP | FIRE ALARM CONTROL PANEL |
| S | SMOKE DETECTOR/SENSOR - BASIC SHAPE ORIENTATION NOT TO BE CHANGED. |
| SS | SMOKE DETECTOR - SINGLE STATION, 120V WITH BATTERY BACKUP. |
| S | DUCT MOUNTED SMOKE DETECTOR, INSTALLED BY MECHANICAL CONTRACTOR, WIRED AND FURNISHED BY ELECTRICAL CONTRACTOR. |
| SSB | SOUNDER BASE |
| SBR | BEAM SMOKE DETECTOR RECEIVER. |
| SBT | BEAM SMOKE DETECTOR TRANSMITTER. |
| | HEAT DETECTOR/SENSOR - BASIC SHAPE ORIENTATION NOT TO BE CHANGED. |
| R | HEAT DETECTOR/SENSOR, RATE-OF-RISE. |
| F | HEAT DETECTOR/SENSOR, FIXED TEMPERATURE (135°) F. |
| F | HEAT DETECTOR/SENSOR, FIXED TEMPERATURE (190°) F. |
| R/F | HEAT DETECTOR/SENSOR, COMBINATION RATE-OF-RISE AND FIXED TEMPERATURE (135°) F. |
| | CARBON MONOXIDE DETECTOR |
| | CARBON DIOXIDE DETECTOR |
| S | SMOKE/CARBON MONOXIDE DETECTOR COMBINATION |
| S H | SMOKE/HEAT DETECTOR/SENSOR COMBINATION |
| S R CO | SMOKE/HEAT DETECTOR/CARBON MONOXIDE DETECTOR |
| 15cd | VISIBLE ONLY (STROBE) - CEILING MOUNT CD=CANDELA RATING/SETTING |
| 15cd | VISIBLE ONLY (STROBE) - WALL MOUNT CD=CANDELA RATING/SETTING |
| F H | HORN ONLY |
| F M | MINI-HORN |
| S | SPEAKER ONLY, WALL MOUNT |
| 15cd | COMBINATION HORN/VISIBLE CD= CANDELA RATING/SETTING |
| 15cd | COMBINATION SPEAKER/VISIBLE CD= CANDELA RATING/SETTING |
| RI | REMOTE ALARM INDICATOR; CEILING MOUNT |
| RI | REMOTE ALARM INDICATOR; WALL MOUNT |
| | ROTATING BEACON |
| F | FIRE BELL, FURNISHED AND INSTALLED BY FIRE PROTECTION SUBCONTRACTOR, WIRED BY THE ELECTRICAL SUBCONTRACTOR |
| RTS | REMOTE ALARM INDICATING AND TEST SWITCH; MOUNTED 7'-0" AFF. |
| AOM | ADDRESSABLE OUTPUT CONTROL MODULE |
| AIM | ADDRESSABLE INPUT MONITOR MODULE |
| AIO # | ADDRESSABLE INPUT/OUTPUT MODULE. # DENOTES NUMBER OF INPUTS AND OUTPUTS. |
| IM | ADDRESSABLE OUTPUT CONTROL MODULE |
| MB | FIRE ALARM MASTER BOX |
| DH | MAGNETIC DOOR HOLD OPEN DEVICE |
| WF | FLOW SWITCH (WATER), FURNISHED AND INSTALLED BY FIRE PROTECTION SUBCONTRACTOR, WIRED BY THE ELECTRICAL SUBCONTRACTOR. |
| VS | TAMPER SWITCH, FURNISHED AND INSTALLED BY FIRE PROTECTION SUBCONTRACTOR, WIRED BY THE ELECTRICAL SUBCONTRACTOR. |
| PS | PRESSURE SWITCH, FURNISHED AND INSTALLED BY FIRE PROTECTION SUBCONTRACTOR, WIRED BY THE ELECTRICAL SUBCONTRACTOR. |
| DK | FIRE ALARM DRILL KEY |

# JOSLIN RECREATION CENTER - CPF RENOVATION

17 Hyatt St., Providence, RI 2909

Owner:
City of Providence, Dept. of Public Property
25 Dorrance Street
Providence, Rhode Island 02903

ROWSE Architects
400 Massasoit Avenue
Suite 300, Second Floor
East Providence, Rhode Island
p. (401) 331-9200

2 Hampshire Street
Suite 106, First Floor
Foxboro, Massachusetts
p. (774) 215-0290
rowse@rowsearchitects.com

**OWNERSHIP AND USE OF DOCUMENTS, DRAWINGS AND SPECIFICATIONS AS INSTRUMENTS OF PROFESSIONAL SERVICE, ARE, AND SHALL REMAIN, THE PROPERTY OF THE ARCHITECT. THESE DOCUMENTS ARE NOT TO BE USED, IN WHOLE OR IN PART, FOR ANY OTHER PROJECTS OR PURPOSES, OR BY ANY OTHER PARTIES THAN THOSE PROPERLY AUTHORIZED BY CONTRACT WITHOUT THE EXPRESS AUTHORIZATION OF THE ARCHITECT.**

B|E|R
BUILDING ENGINEERING RESOURCES, INC.
66 Main Street
N. Easton, MA 02356
T 508.230.0260
F 508.230.0265
ber@ber-engineering.com

Office Commons 95
351 Centerville Road
Warwick, RI 02886
T 401.384.7682
www.ber-engineering.com

## GENERAL NOTES

1. CONTRACTOR SHALL VISIT SITE, PRIOR TO BID, AND CAREFULLY INVESTIGATE AND EXAMINE THE AREA OF WORK SO AS TO SATISFY HIMSELF AS TO THE NATURE AND LOCATION OF THE WORK, CONTRACTOR TO NOTE THE CHARACTER, QUALITY, QUANTITIES OF MATERIALS REQUIRED AND DIFFICULTIES TO BE ENCOUNTERED, THE KIND AND EXTENT OF EQUIPMENT AND FACILITIES NEEDED FOR PERFORMANCE OF THE WORK AND OTHER ITEMS WHICH MAY, IN ANY WAY, AFFECT THE WORK OR CONTRACTOR'S PERFORMANCE.

2. DRAWINGS DO NOT INCLUDE NECESSARY COMPONENTS FOR CONSTRUCTION SAFETY.

**Date:** 05/05/2025
**Drawn by:** DD/DC **Proj. Mgr.:** ARV

**Revisions**

| No. | Date | Description |
|---|---|---|
| | | |
| | | |
| | | |
| | | |
| | | |
| | | |
| | | |
| | | |

FIRE ALARM LEGEND, NOTES, & ABBREVIATIONS

# FA0.00



BER# 24070

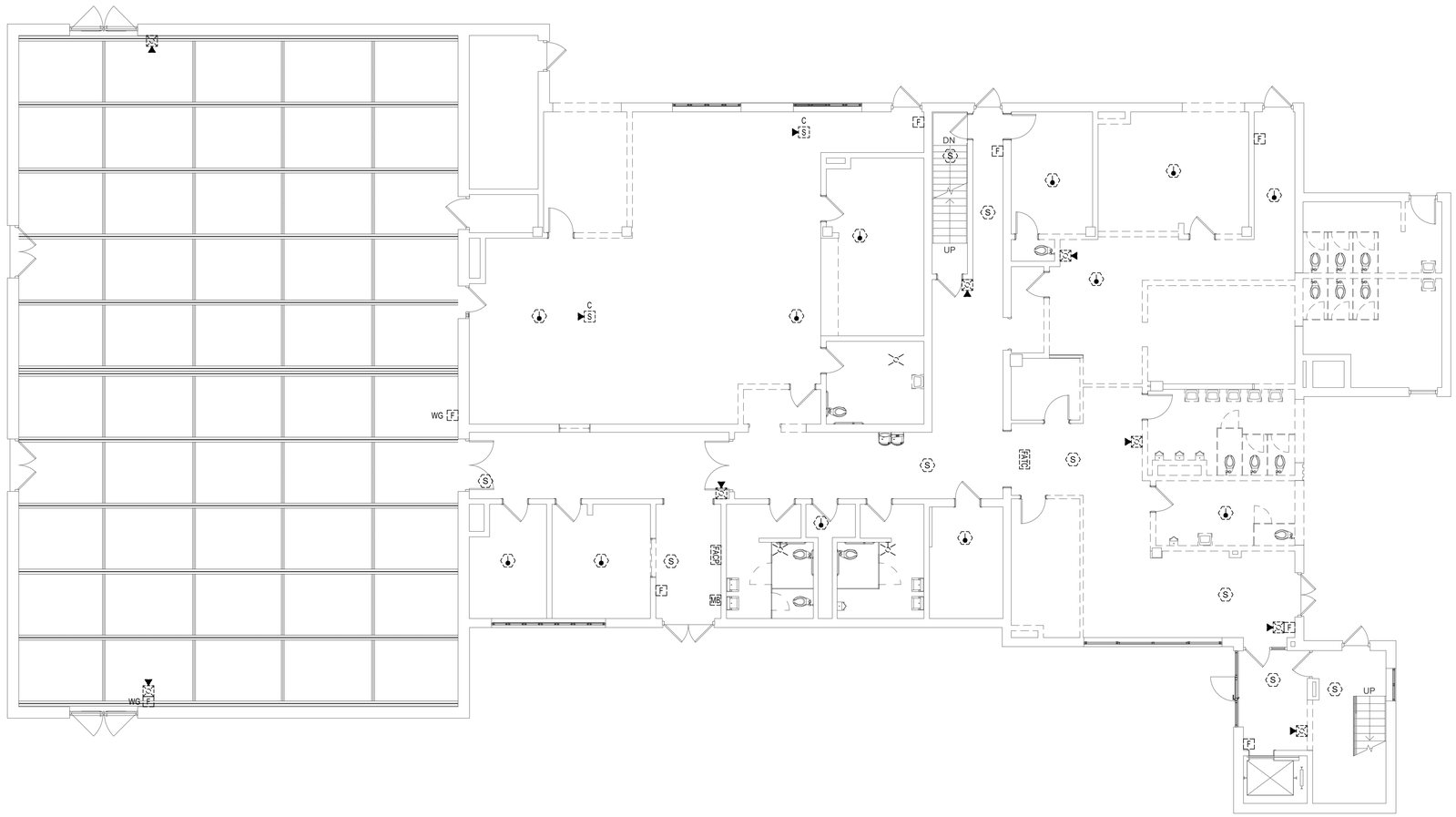


1 FAD1.00 FIRST FLOOR DEMOLITION PLAN – FIRE ALARM

1/8" = 1'-0"

# JOSLIN RECREATION CENTER - CPF RENOVATION

17 Hyatt St., Providence, RI 2909

Owner:
City of Providence, Dept. of Public Property
25 Dorrance Street
Providence, Rhode Island 02903

ROWSE Architects
400 Massasoit Avenue
Suite 300, Second Floor
East Providence, Rhode Island
p. (401) 331-9200

2 Hampshire Street
Suite 106, First Floor
Foxboro, Massachusetts
p. (774) 215-0290
rowse@rowsearchitects.com

**OWNERSHIP AND USE OF DOCUMENTS, DRAWINGS AND SPECIFICATIONS AS INSTRUMENTS OF PROFESSIONAL SERVICE, ARE, AND SHALL REMAIN, THE PROPERTY OF THE ARCHITECT. THESE DOCUMENTS ARE NOT TO BE USED, IN WHOLE OR IN PART, FOR ANY OTHER PROJECTS OR PURPOSES, OR BY ANY OTHER PARTIES THAN THOSE PROPERLY AUTHORIZED BY CONTRACT WITHOUT THE EXPRESS AUTHORIZATION OF THE ARCHITECT.**

B|E|R
BUILDING ENGINEERING RESOURCES, INC.
66 Main Street
N. Easton, MA 02356
T 508.230.0260
F 508.230.0265
ber@ber-engineering.com

Office Commons 95
351 Centerville Road
Warwick, RI 02886
T 401.384.7682
www.ber-engineering.com

## GENERAL NOTES

1. CONTRACTOR SHALL VISIT SITE, PRIOR TO BID, AND CAREFULLY INVESTIGATE AND EXAMINE THE AREA OF WORK SO AS TO SATISFY HIMSELF AS TO THE NATURE AND LOCATION OF THE WORK, CONTRACTOR TO NOTE THE CHARACTER, QUALITY, QUANTITIES OF MATERIALS REQUIRED AND DIFFICULTIES TO BE ENCOUNTERED, THE KIND AND EXTENT OF EQUIPMENT AND FACILITIES NEEDED FOR PERFORMANCE OF THE WORK AND OTHER ITEMS WHICH MAY, IN ANY WAY, AFFECT THE WORK OR CONTRACTOR'S PERFORMANCE.

2. DRAWINGS DO NOT INCLUDE NECESSARY COMPONENTS FOR CONSTRUCTION SAFETY.

**Date:** 05/05/2025

**Drawn by:** DD/DC **Proj. Mgr.:** ARV

**Revisions**

| No. | Date | Description |
|---|---|---|
| | | |
| | | |
| | | |
| | | |
| | | |
| | | |
| | | |

FIRE ALARM
FIRST FLOOR DEMOLITION PLAN

# FAD1.00



BER# 24095

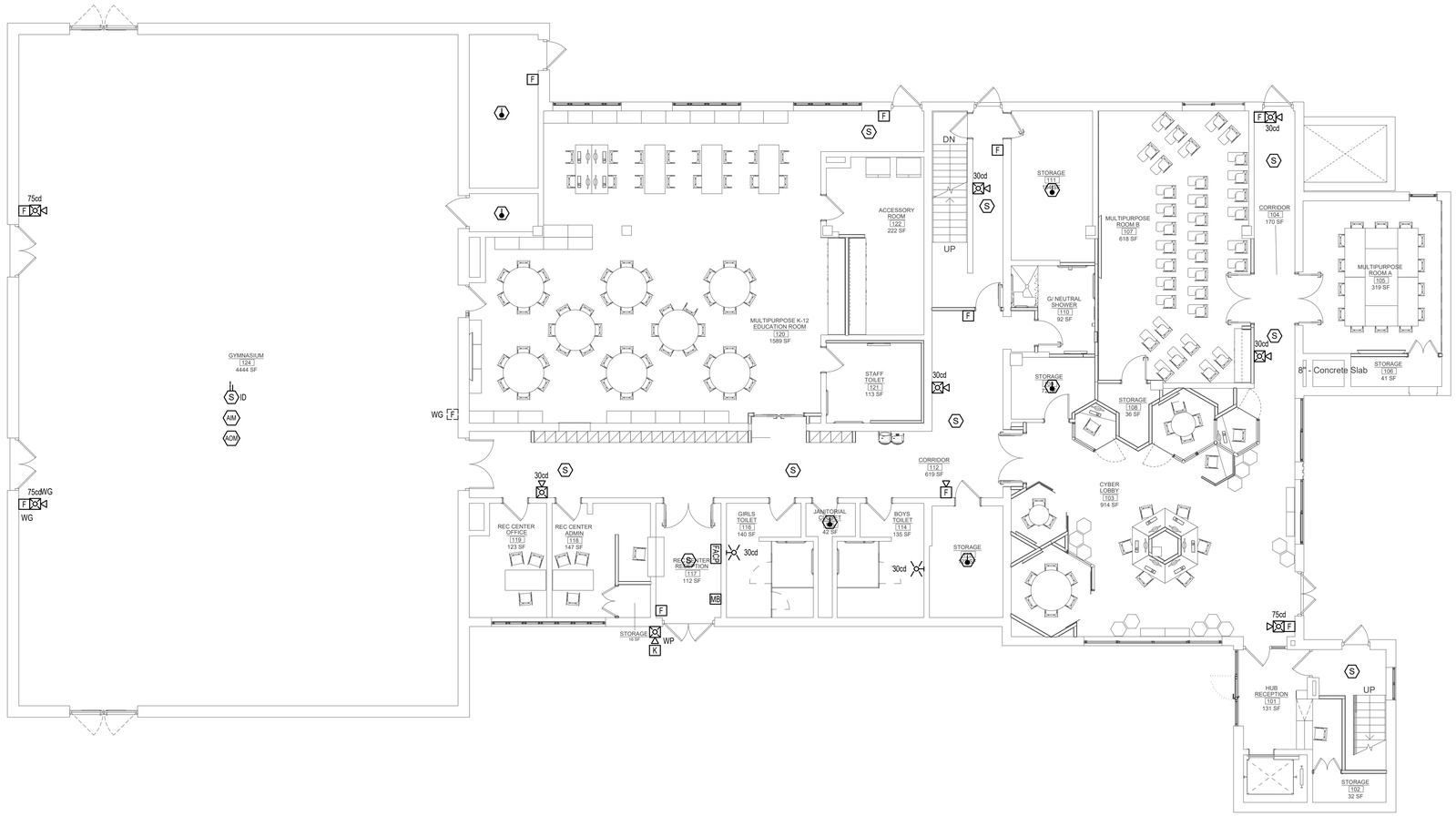


1 FA1.00 FIRST FLOOR PLAN – FIRE ALARM

1/8" = 1'-0"

# JOSLIN RECREATION CENTER - CPF RENOVATION

17 Hyatt St., Providence, RI 2909

Owner:
City of Providence, Dept. of Public Property
25 Dorrance Street
Providence, Rhode Island 02903


ROWSE Architects
400 Massasoit Avenue
Suite 300, Second Floor
East Providence, Rhode Island
p. (401) 331-9200

2 Hampshire Street
Suite 106, First Floor
Foxboro, Massachusetts
p. (774) 215-0290
rowse@rowsearchitects.com



**OWNERSHIP AND USE OF DOCUMENTS, DRAWINGS AND SPECIFICATIONS AS INSTRUMENTS OF PROFESSIONAL SERVICE, ARE, AND SHALL REMAIN, THE PROPERTY OF THE ARCHITECT. THESE DOCUMENTS ARE NOT TO BE USED, IN WHOLE OR IN PART, FOR ANY OTHER PROJECTS OR PURPOSES, OR BY ANY OTHER PARTIES THAN THOSE PROPERLY AUTHORIZED BY CONTRACT WITHOUT THE EXPRESS AUTHORIZATION OF THE ARCHITECT.**



B|E|R
BUILDING ENGINEERING RESOURCES, INC.
66 Main Street
N. Easton, MA 02356
T 508.230.0260
F 508.230.0265
ber@ber-engineering.com

Office Commons 95
351 Centerville Road
Warwick, RI 02886
T 401.384.7682
www.ber-engineering.com


## GENERAL NOTES

1. CONTRACTOR SHALL VISIT SITE, PRIOR TO BID, AND CAREFULLY INVESTIGATE AND EXAMINE THE AREA OF WORK SO AS TO SATISFY HIMSELF AS TO THE NATURE AND LOCATION OF THE WORK. CONTRACTOR TO NOTE THE CHARACTER, QUALITY, QUANTITIES OF MATERIALS REQUIRED AND DIFFICULTIES TO BE ENCOUNTERED. THE KIND AND EXTENT OF EQUIPMENT AND FACILITIES NEEDED FOR PERFORMANCE OF THE WORK AND OTHER ITEMS WHICH MAY, IN ANY WAY, AFFECT THE WORK OR CONTRACTOR'S PERFORMANCE.

2. DRAWINGS DO NOT INCLUDE NECESSARY COMPONENTS FOR CONSTRUCTION SAFETY.

**Date:** 05/05/2025

**Drawn by:** DD/DC **Proj. Mgr.:** ARV

**Revisions**

| No. | Date | Description |
|---|---|---|
| | | |
| | | |
| | | |
| | | |
| | | |
| | | |
| | | |
| | | |

FIRE ALARM
FIRST FLOOR PLAN

# FA1.00



BLKF 24/00

# SECURITY LEGEND AND ABBREVIATIONS

## ABBREVIATIONS

| | |
|---|---|
| ℄ | CENTERLINE |
| AC | ABOVE COUNTER |
| ACP | ACCESS CONTROL PANEL |
| AFF | ABOVE FINISHED FLOOR |
| ATR | ALL THREADED ROD |
| AWG | AMERICAN WIRE GAUGE |
| BFBI | BUILDER FURNISHED - BUILDER INSTALLED |
| BMS | BUILDING MANAGEMENT SYSTEM |
| C | CONDUIT |
| CCTV | CLOSED CIRCUIT TELEVISION |
| CFD | CEMENT-FIBER DUCT |
| CL | CLOSET |
| CLG | CEILING |
| COAX | COAXIAL CABLE |
| CT | CABLE TRAY |
| CTR | CENTER |
| DIA | DIAMETER |
| DGP | DATA GATHERING PANEL |
| DWG | DRAWING |
| EC | ELECTRICAL CONTRACTOR |
| ELEV | ELEVATOR |
| EMI | ELECTROMAGNETIC INTERFERENCE |
| EMT | ELECTRICAL METALLIC TUBING |
| EQPT | EQUIPMENT |
| FBO | FURNISHED BY OTHERS |
| FC | FINISHED CEILING |
| FCC | FIRE CONTROL CENTER |
| FR | FIRE RATED |
| FRP | FIBERGLASS REINFORCED PLASTIC |
| GFGI | GOVERNMENT FURNISHED - GOVERNMENT INSTALLED |
| GC | GENERAL CONTRACTOR |
| GND | GROUND |
| HVAC | HEATING VENTILATION & AIR CONDITIONING |
| IDF | INTERMEDIATE DISTRIBUTION FRAME |
| IDP | INTRUSION DETECTION PANEL |
| IMC | INTERMEDIATE METAL CONDUIT - SEE NEC ARTICLE 342 |
| JB | JUNCTION BOX |
| LAN | LOCAL AREA NETWORK |
| LEC | LOCAL EXCHANGE CARRIER |
| MDF | MAIN DISTRIBUTION FRAME |
| MM | MULTI-MODE (OPTICAL FIBER) |
| MTD | MOUNTED |
| MTG | MOUNTING |
| NEC | NATIONAL ELECTRICAL CODE - NFPA 70 |
| NESC | NATIONAL ELECTRICAL SAFETY CODE |
| NIC | NOT IN CONTRACT |
| NTS | NOT TO SCALE |
| OSP | OUTSIDE PANT |
| PNL | PANEL |
| PR | PAIRS-NUMBER OF PAIRS IN COPPER CABLE |
| PVC | POLYVINYL CHLORIDE |
| RM | ROOM |
| RMC | RIGID METAL CONDUIT - SEE NEC ARTICLE 344 |
| RU | RACK UNIT; UNIT OF PATCH PANEL HEIGHT EQUAL TO 1.75 INCH |
| SCC | SECURITY CONTROL CENTER |
| SDF | SECURITY DISTRIBUTION FRAME |
| SM | SINGLE-MODE (OPTICAL FIBER) |
| STP | SHIELDED TWISTED PAIR |
| TBD | TO BE DETERMINED |
| TC | TELECOMMUNICATIONS CONTRACTOR |
| TEL | TELECOMMUNICATION |
| TYP | TYPICAL |
| UON | UNLESS OTHERWISE NOTED |
| UTP | UNSHIELDED TWISTED PAIR |
| WP | WEATHERPROOF |

## LOW VOLTAGE WIRING DEVICE LEGEND

| | |
|---|---|
| CR M / E | CARD READER LOCATION<br>(1) - 22/6 SHIELDED<br>E = EXISTING TO REMAIN<br>M = MULLION READER |
| DC | DOOR CONTACT LOCATION<br>(1) - 18/4 SHIELDED FOR DOOR CONTACT |
| RE | REQUEST TO EXIT LOCATION<br>(1) - 18/4 SHIELDED |
| EL | ELECTRIFIED LOCK LOCATION<br>(1) - 16/2 SHIELDED |
| GB | GLASS BREAK LOCATION<br>(1) - 18/4 SHIELDED |
| MD | MOTION DETECTOR LOCATION<br>(1) - 18/4 SHIELDED |
| KP | KEY PAD LOCATION<br>(1) - 18/4 SHIELDED<br>E = EXISTING |
| VID INT M | VIDEO INTERCOM LOCATION<br>VIDEO INTERCOM IS 2N/AXIS MODEL #01273-001<br>"M" = MASTER STATION |
| JB | 4-11/16" JUNCTION BOX |
| CAM | FIXED VIEW CAMERA LOCATION<br>(1) - CAT 6 CMP CABLE<br>EXT = EXTERIOR<br>E = EXISTING TO REMAIN |
| 180° CAM | 180° CAMERA<br>(1) - CAT 6 CMP CABLE<br>EXT = EXTERIOR |
| 360° CAM | 360° CAMERA<br>(1) - CAT 6 CMP CABLE<br>EXT = EXTERIOR<br>FE = FISHEYE |
| XX | INDICATES DOOR TYPE - SEE SHEET SE200 FOR DOOR TYPE DETAILS |
| DR | DOOR RELEASE BUTTON<br>(1) - 18/4 SHIELDED TO ACP |
| PB | PANIC BUTTON<br>(1) - 18/4 SHIELDED |
| ACP | ACCESS CONTROL PANEL |

SECURITY NOTES:

1. TELECOM CONTRACTOR SHALL RUN DATA CABLING FOR ALL SECURITY CAMERA AND VIDEO INTERCOMS.
2. SECURITY CONTRACTOR TO REFER TO TELECOM DRAWINGS FOR ADDITIONAL INFORMATION/.

## EXISTING EQUIPMENT

| | |
|---|---|
| (E) | EXISTING TO REMAIN |
| (X) | EXISTING DEVICE TO BE REMOVED |
| (XR) | EXISTING DEVICE TO BE REMOVED AND RELOCATED |
| (XL) | NEW LOCATION OF EXISTING RELOCATED DEVICE |

## LEGEND NOTES

THIS SHEET IS A GENERAL LIST OF SYMBOLS AND ABBREVIATIONS AND SHALL BE USED AS A DICTIONARY TO DEFINE ITEMS INDICATED ON DRAWINGS. NOT ALL SYMBOLS OR ABBREVIATIONS ARE NECESSARILY USED ON THIS PROJECT.

## DRAWING LIST



| | |
|---|---|
| SE0.01 | SECURITY - LEGEND AND NOTES SHEET |
| SE1.00 | SECURITY - FIRST FLOOR PLAN |
| SE1.01 | SECURITY - BASEMENT AND SECOND FLOOR PLAN |
| SE2.00 | SECURITY - DETAILS SHEET |



# JOSLIN RECREATION CENTER - CPF RENOVATION

17 Hyatt St., Providence, RI 2909

Owner:
City of Providence, Dept. of Public Property
25 Dorrance Street
Providence, Rhode Island 02903


Rowse Architects

400 Massasoit Avenue
Suite 300, Second Floor
East Providence, Rhode Island
p. (401) 331-9200

2 Hampshire Street
Suite 106, First Floor
Foxboro, Massachusetts
p. (774) 215-0290

rowse@rowsearchitects.com



**OWNERSHIP AND USE OF DOCUMENTS, DRAWINGS AND SPECIFICATIONS AS INSTRUMENTS OF PROFESSIONAL SERVICE, ARE, AND SHALL REMAIN, THE PROPERTY OF THE ARCHITECT. THESE DOCUMENTS ARE NOT TO BE USED, IN WHOLE OR IN PART, FOR ANY OTHER PROJECTS OR PURPOSES, OR BY ANY OTHER PARTIES THAN THOSE PROPERLY AUTHORIZED BY CONTRACT WITHOUT THE EXPRESS AUTHORIZATION OF THE ARCHITECT.**


## GENERAL NOTES

1. CONTRACTOR SHALL VISIT SITE, PRIOR TO BID, AND CAREFULLY INVESTIGATE AND EXAMINE THE AREA OF WORK SO AS TO SATISFY HIMSELF AS TO THE NATURE AND LOCATION OF THE WORK, CONTRACTOR TO NOTE THE CHARACTER, QUALITY, QUANTITIES OF MATERIALS REQUIRED AND DIFFICULTIES TO BE ENCOUNTERED, THE KIND AND EXTENT OF EQUIPMENT AND FACILITIES NEEDED FOR PERFORMANCE OF THE WORK AND OTHER ITEMS WHICH MAY, IN ANY WAY, AFFECT THE WORK OR CONTRACTORS PERFORMANCE.
2. DRAWINGS DO NOT INCLUDE NECESSARY COMPONENTS FOR CONSTRUCTION SAFETY.

MELISSA ANNE SIERRA
No. 11812
REGISTERED PROFESSIONAL ENGINEER
ELECTRICAL

**Date:** MAY 05, 2025

**Drawn by:** JAS **Proj. Mgr.:** MG

**Revisions**

| No. | Date | Description |
|---|---|---|
| | | |
| | | |
| | | |
| | | |
| | | |
| | | |
| | | |
| | | |

SECURITY
LEGEND AND NOTES SHEET

# SE0.01

SHEET NOTES:
1. EXISTING CAMERAS SHALL BE REWIRED TO 2ND FLOOR IT ROOM
2. COORDINATE FIELD OF VIEWS OF THE EXISTNG AND NEW CAMERAS WITH REC CENTER STAFF.

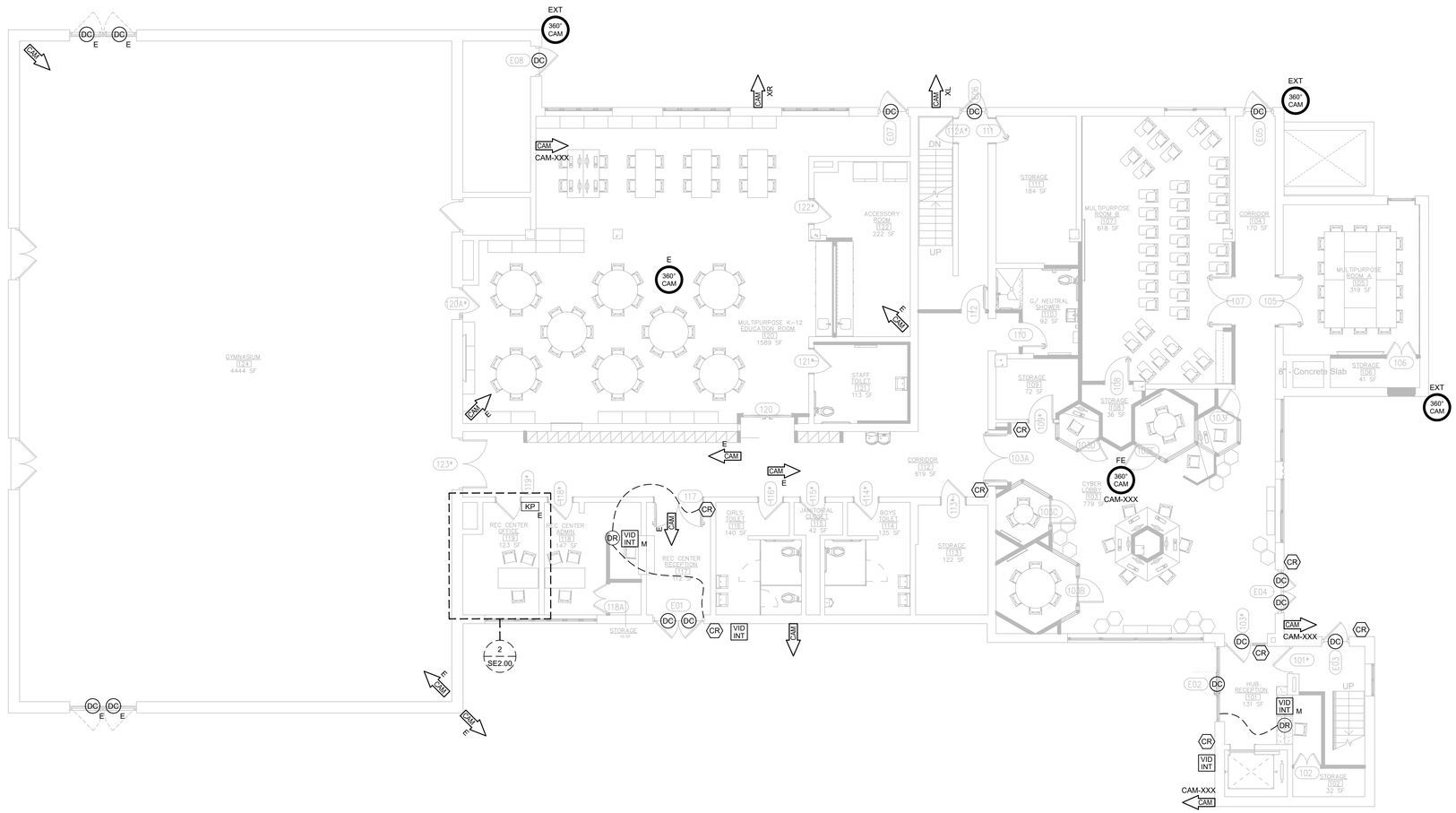


1 SE1.00 SECURITY - FIRST FLOOR PLAN

SCALE: 1/8" = 1'-0"

# JOSLIN RECREATION CENTER - CPF RENOVATION

17 Hyatt St., Providence, RI 2909

Owner:
City of Providence, Dept. of Public Property
25 Dorrance Street
Providence, Rhode Island 02903


Rowse Architects
400 Massasoit Avenue
Suite 300, Second Floor
East Providence, Rhode Island
p. (401) 331-9200

2 Hampshire Street
Suite 106, First Floor
Foxboro, Massachusetts
p. (774) 215-0290
rowse@rowsearchitects.com



**OWNERSHIP AND USE OF DOCUMENTS, DRAWINGS AND SPECIFICATIONS AS INSTRUMENTS OF PROFESSIONAL SERVICE, ARE, AND SHALL REMAIN, THE PROPERTY OF THE ARCHITECT. THESE DOCUMENTS ARE NOT TO BE USED, IN WHOLE OR IN PART, FOR ANY OTHER PROJECTS OR PURPOSES, OR BY ANY OTHER PARTIES THAN THOSE PROPERLY AUTHORIZED BY CONTRACT WITHOUT THE EXPRESS AUTHORIZATION OF THE ARCHITECT.**


## GENERAL NOTES

1. CONTRACTOR SHALL VISIT SITE, PRIOR TO BID, AND CAREFULLY INVESTIGATE AND EXAMINE THE AREA OF WORK SO AS TO SATISFY HIMSELF AS TO THE NATURE AND LOCATION OF THE WORK. CONTRACTOR TO NOTE THE CHARACTER, QUALITY, QUANTITIES OF MATERIALS REQUIRED AND DIFFICULTIES TO BE ENCOUNTERED, THE KIND AND EXTENT OF EQUIPMENT AND FACILITIES NEEDED FOR PERFORMANCE OF THE WORK AND OTHER ITEMS WHICH MAY, IN ANY WAY, AFFECT THE WORK OR CONTRACTORS PERFORMANCE.

2. DRAWINGS DO NOT INCLUDE NECESSARY COMPONENTS FOR CONSTRUCTION SAFETY.

MELISSA ANNE SERRA
No. 11812
REGISTERED PROFESSIONAL ENGINEER
ELECTRICAL

**Date:** MAY 05, 2025
**Drawn by:** JAS **Proj. Mgr.:** MG
**Revisions**

| No. | Date | Description |
|---|---|---|
| | | |

SECURITY
FIRST FLOOR PLAN

# SE1.00

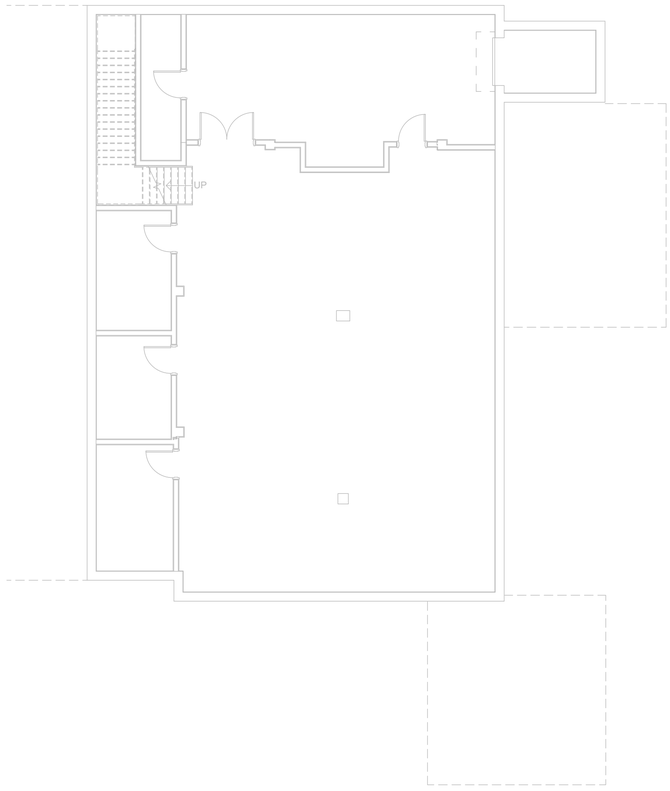


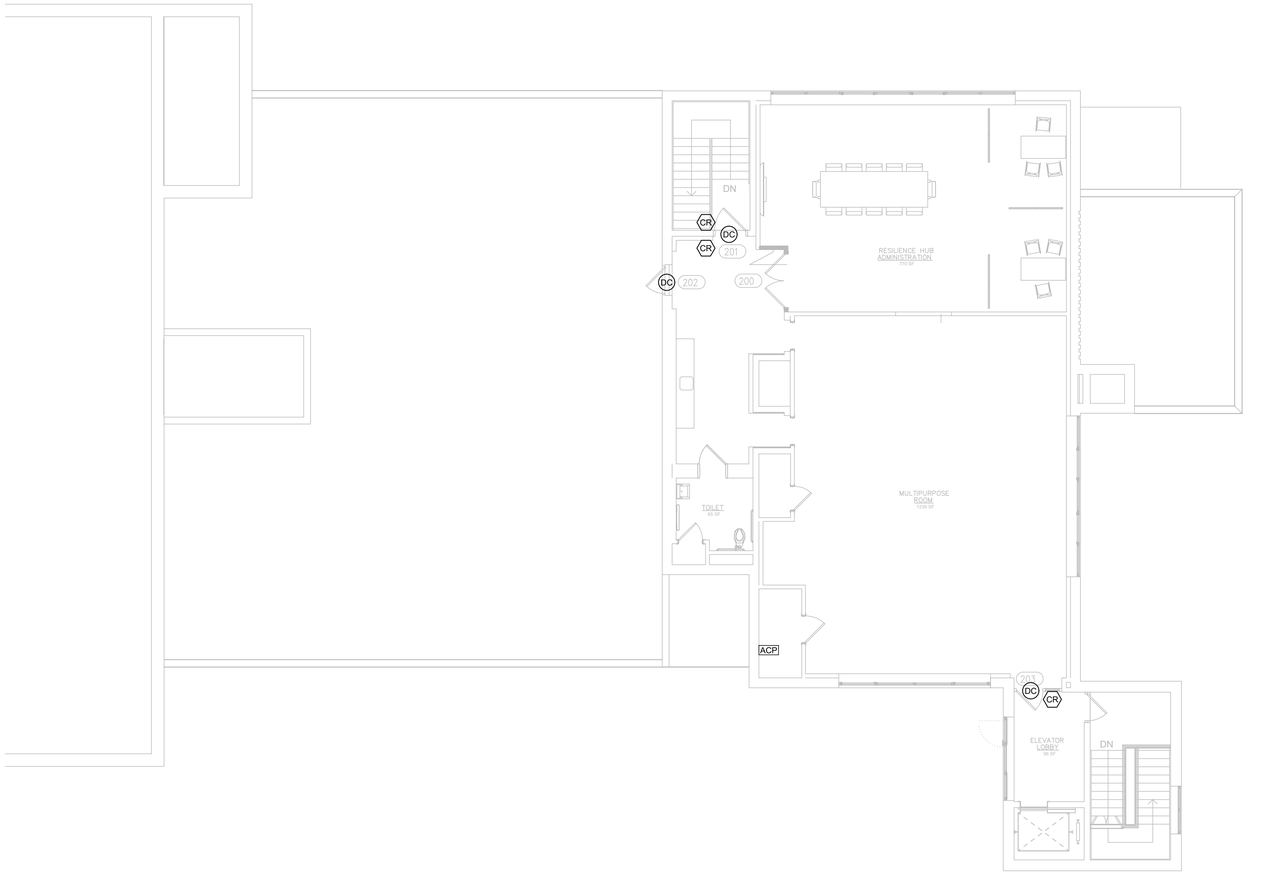


1 SE1.01 SECURITY - BASEMENT FLOOR PLAN

SCALE: 1/8" = 1'-0"

2 SE1.01 SECURITY - SECOND FLOOR PLAN

SCALE: 1/8" = 1'-0"

# JOSLIN RECREATION CENTER - CPF RENOVATION

17 Hyatt St., Providence, RI 2909

Owner:
City of Providence, Dept. of Public Property
25 Dorrance Street
Providence, Rhode Island 02903

ROWSE Architects
400 Massasoit Avenue
Suite 300, Second Floor
East Providence, Rhode Island
p. (401) 331-9200

2 Hampshire Street
Suite 106, First Floor
Foxboro, Massachusetts
p. (774) 215-0290
rowse@rowsearchitects.com

**OWNERSHIP AND USE OF DOCUMENTS, DRAWINGS AND SPECIFICATIONS AS INSTRUMENTS OF PROFESSIONAL SERVICE, ARE, AND SHALL REMAIN, THE PROPERTY OF THE ARCHITECT. THESE DOCUMENTS ARE NOT TO BE USED, IN WHOLE OR IN PART, FOR ANY OTHER PROJECTS OR PURPOSES, OR BY ANY OTHER PARTIES THAN THOSE PROPERLY AUTHORIZED BY CONTRACT WITHOUT THE EXPRESS AUTHORIZATION OF THE ARCHITECT.**

## GENERAL NOTES

1. CONTRACTOR SHALL VISIT SITE, PRIOR TO BID, AND CAREFULLY INVESTIGATE AND EXAMINE THE AREA OF WORK SO AS TO SATISFY HIMSELF AS TO THE NATURE AND LOCATION OF THE WORK. CONTRACTOR TO NOTE THE CHARACTER, QUALITY, QUANTITIES OF MATERIALS REQUIRED AND DIFFICULTIES TO BE ENCOUNTERED, THE KIND AND EXTENT OF EQUIPMENT AND FACILITIES NEEDED FOR PERFORMANCE OF THE WORK AND OTHER ITEMS WHICH MAY, IN ANY WAY, AFFECT THE WORK OR CONTRACTORS PERFORMANCE.

2. DRAWINGS DO NOT INCLUDE NECESSARY COMPONENTS FOR CONSTRUCTION SAFETY.

MELISSA ANNE SERRA
No. 11812
REGISTERED PROFESSIONAL ENGINEER
ELECTRICAL

**Date:** MAY 05, 2025
**Drawn by:** JAS **Proj. Mgr.:** MG
**Revisions**

| No. | Date | Description |
|---|---|---|
| | | |
| | | |
| | | |
| | | |
| | | |
| | | |
| | | |
| | | |

SECURITY
BASEMENT AND SECOND
FLOOR PLANS

# SE1.01

## SECURITY CABLING RISER

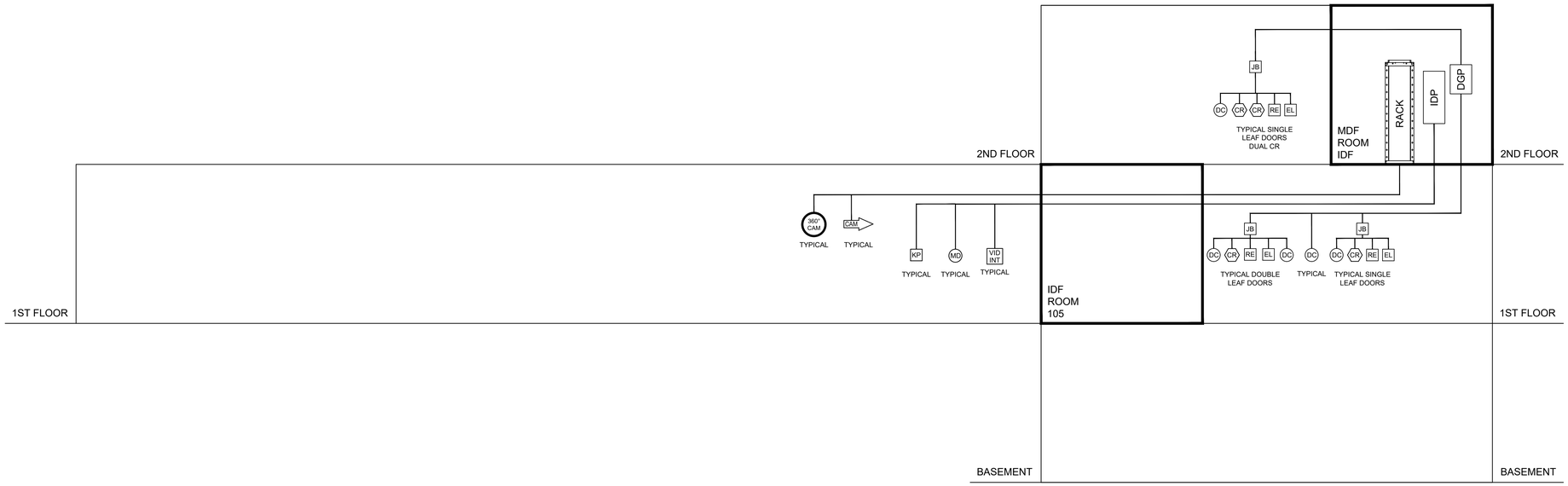


1 SE2.00 — SECURITY CABLING RISER DIAGRAM

SCALE: N.T.S.

NOTES:
1. SEE SECURITY FLOOR PLANS FOR DEVICE QUANTITIES

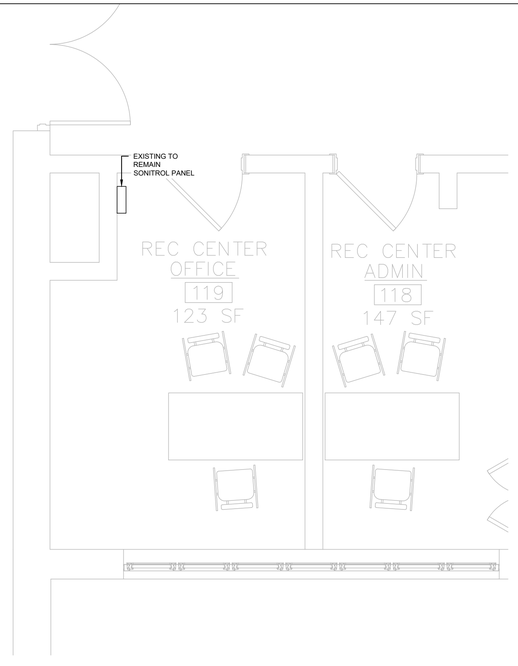


2 SE2.00 — REC CENTER OFFICE 122 - EXISITNG IDF ROOM

SCALE: 3/8" = 1'-0"




3 SE2.00 — REC CENTER OFFICE 122 - EXISITNG IDF ROOM

SCALE: N.T.S.

# JOSLIN RECREATION CENTER - CPF RENOVATION

17 Hyatt St., Providence, RI 2909

Owner:
City of Providence, Dept. of Public Property
25 Dorrance Street
Providence, Rhode Island 02903


Rowse Architects
400 Massasoit Avenue
Suite 300, Second Floor
East Providence, Rhode Island
p. (401) 331-9200

2 Hampshire Street
Suite 106, First Floor
Foxboro, Massachusetts
p. (774) 215-0290
rowse@rowsearchitects.com



**OWNERSHIP AND USE OF DOCUMENTS, DRAWINGS AND SPECIFICATIONS AS INSTRUMENTS OF PROFESSIONAL SERVICE, ARE, AND SHALL REMAIN, THE PROPERTY OF THE ARCHITECT. THESE DOCUMENTS ARE NOT TO BE USED, IN WHOLE OR IN PART, FOR ANY OTHER PROJECTS OR PURPOSES, OR BY ANY OTHER PARTIES THAN THOSE PROPERLY AUTHORIZED BY CONTRACT WITHOUT THE EXPRESS AUTHORIZATION OF THE ARCHITECT.**


## GENERAL NOTES

1. CONTRACTOR SHALL VISIT SITE, PRIOR TO BID, AND CAREFULLY INVESTIGATE AND EXAMINE THE AREA OF WORK SO AS TO SATISFY HIMSELF AS TO THE NATURE AND LOCATION OF THE WORK. CONTRACTOR TO NOTE THE CHARACTER, QUALITY, QUANTITIES OF MATERIALS REQUIRED AND DIFFICULTIES TO BE ENCOUNTERED, THE KIND AND EXTENT OF EQUIPMENT AND FACILITIES NEEDED FOR PERFORMANCE OF THE WORK AND OTHER ITEMS WHICH MAY, IN ANY WAY, AFFECT THE WORK OR CONTRACTORS PERFORMANCE.

2. DRAWINGS DO NOT INCLUDE NECESSARY COMPONENTS FOR CONSTRUCTION SAFETY.

MELISSA ANNE SERRA
No. 11812
REGISTERED PROFESSIONAL ENGINEER
ELECTRICAL

**Date:** MAY 05, 2025
**Drawn by:** JAS **Proj. Mgr.:** MG

**Revisions**

| No. | Date | Description |
|---|---|---|
| | | |
| | | |
| | | |
| | | |
| | | |
| | | |
| | | |

SECURITY
BASEMENT AND SECOND
FLOOR PLANS

# SE2.00

# AUDIO/VISUAL LEGEND AND ABBREVIATIONS

## ABBREVIATIONS

| | |
|---|---|
| ℄ | CENTERLINE |
| AC | ABOVE COUNTER |
| AFF | ABOVE FINISHED FLOOR |
| ATR | ALL THREADED ROD |
| AWG | AMERICAN WIRE GAUGE |
| BFBI | BUILDER FURNISHED - BUILDER INSTALLED |
| BMS | BUILDING MANAGEMENT SYSTEM |
| C | CONDUIT |
| CCTV | CLOSED CIRCUIT TELEVISION |
| CFD | CEMENT-FIBER DUCT |
| CL | CLOSET |
| CLG | CEILING |
| COAX | COAXIAL CABLE |
| CT | CABLE TRAY |
| CTR | CENTER |
| DIA | DIAMETER |
| DWB | DISPLAY WALL BOX |
| DWG | DRAWING |
| EC | ELECTRICAL CONTRACTOR |
| ELEV | ELEVATOR |
| EMI | ELECTROMAGNETIC INTERFERENCE |
| EMT | ELECTRICAL METALLIC TUBING |
| EQPT | EQUIPMENT |
| FBO | FURNISHED BY OTHERS |
| FC | FINISHED CEILING |
| FCC | FIRE CONTROL CENTER |
| FR | FIRE RATED |
| FRP | FIBERGLASS REINFORCED PLASTIC |
| GFGI | GOVERNMENT FURNISHED - GOVERNMENT INSTALLED |
| GC | GENERAL CONTRACTOR |
| GND | GROUND |
| HVAC | HEATING VENTILATION & AIR CONDITIONING |
| IDF | INTERMEDIATE DISTRIBUTION FRAME |
| IMC | INTERMEDIATE METAL CONDUIT - SEE NEC ARTICLE 342 |
| JB | JUNCTION BOX |
| LAN | LOCAL AREA NETWORK |
| LEC | LOCAL EXCHANGE CARRIER |
| MDF | MAIN DISTRIBUTION FRAME |
| MM | MULTI-MODE (OPTICAL FIBER) |
| MTD | MOUNTED |
| MTG | MOUNTING |
| NEC | NATIONAL ELECTRICAL CODE - NFPA 70 |
| NESC | NATIONAL ELECTRICAL SAFETY CODE |
| NIC | NOT IN CONTRACT |
| NTS | NOT TO SCALE |
| OFCI | OWNER FURNISHED CONTRACTOR INSTALLED |
| OSP | OUTSIDE PANT |
| PNL | PANEL |
| PR | PAIRS-NUMBER OF PAIRS IN COPPER CABLE |
| PVC | POLYVINYL CHLORIDE |
| RM | ROOM |
| RMC | RIGID METAL CONDUIT - SEE NEC ARTICLE 344 |
| RU | RACK UNIT; UNIT OF PATCH PANEL HEIGHT EQUAL TO 1.75 INCH |
| SCC | SECURITY CONTROL CENTER |
| SDF | SECURITY DISTRIBUTION FRAME |
| SM | SINGLE-MODE (OPTICAL FIBER) |
| STP | SHIELDED TWISTED PAIR |
| TBD | TO BE DETERMINED |
| TC | TELECOMMUNICATIONS CONTRACTOR |
| TEL | TELECOMMUNICATION |
| TYP | TYPICAL |
| UON | UNLESS OTHERWISE NOTED |
| UTP | UNSHIELDED TWISTED PAIR |
| WP | WEATHERPROOF |

## SYMBOLS LEGEND

| RACEWAY LEGEND | |
|---|---|
| T ——— T ——— | TELECOMMUNICATIONS CONDUIT |
| UT——— UT——— | CONDUITS BELOW GRADE/SLAB OR EMBEDDED IN SLAB |
| J ——— J ——— | CABLES ON J-HOOKS |
| ○——— | CONDUIT UP |
| ●——— | CONDUIT DOWN |
| ⊢——— | CONDUIT STUBBED OUT WITH BUSHING |
| ◕ | CONDUIT CROSS-SECTION |
| ———CT——— | TELECOMMUNICATIONS CABLE TRAY |
| ▯▯▯▯▯▯▯▯▯▯▯▯▯▯ | TELECOMMUNICATIONS CABLE TRAY |

## MISCELLANEOUS SYMBOL LEGEND

| | |
|---|---|
| ◇ # | SHEET KEYNOTE |
| △ # | REVISION NUMBER |
| 1 / T2.1 | CALLOUT — CALLOUT NUMBER / SHEET NUMBER |

## AUDIO/VISUAL DEVICE LEGEND

| | |
|---|---|
| AV | CRESTRON DM-TX-200-C-2G-B-T |
| TP | TOUCH PANEL LOCATION<br>CRESTRON TSW-1070-B-S WITH BACKBOX |
| SB | SOUND BAR<br>JABRA PANCAST 50 |
| DM | CRESTRON DM-RMC-4KZ-100-C |
| ANT | SHURE UA-824 ANTENNA WITH WALL MOUNTED BRACKED |
| FB | FLOOR BOX LOCATION , PROVIDE CONDUITS AS SHOWN ON FLOORPANS |
| | CHIEF PAC-526 BOX<br>SEE WALL ELEVATIONS FOR CONDUIT REQUIREMENTS<br>PROVIDE PULL STRINGS IN EACH CONDUIT |
| BT | QSC AXIOM BLUETOOTH EXTENDER<br>PLATE - BT1 |
| BT - RX | QSC AXIOM ACP10 RECEIVER |
| S | CRESTRON SAROS<br>IC6T-W-T CEILING SPEAKER |
| MIC | MIC - SHURE MXA 920<br>(1) - CAT 6 TO AV LAN |

## GENERAL NOTES

1. THE DRAWINGS AND SPECIFICATIONS INDICATE THE INTENT OF THE DESIGN AND SHALL BE CONSIDERED AS DIAGRAMMATIC ONLY. EXACT LOCATIONS FOR AUDIO/VISUAL DEVICES AND EQUIPMENT SHALL BE DETERMINED AT THE SITE. AS WORK PROGRESSES, DIMENSIONS AND CONDITIONS SHALL BE CHECKED AND VERIFIED BY THE CONTRACTOR AT THE SITE.
2. USE ONLY PRODUCTS LISTED FOR THEIR INTENDED USE BY A NATIONALLY RECOGNIZED TESTING LABORATORY (NRTL), EXCEPT THOSE TYPES OF PRODUCTS FOR WHICH NO RELEVANT STANDARDS EXIST.
3. WHERE ELECTRICAL POWER OUTLETS, CONNECTION POINTS AND LIGHTING ARE SHOWN ON THE AUDIO/VISUAL DRAWINGS, THEY ARE INCLUDED ONLY FOR LOCATION COORDINATION PURPOSES. REFER TO THE ELECTRICAL POWER & LIGHTING DRAWINGS FOR THEIR ACTUAL INSTALLATION AND CONSTRUCTION.
4. CONDUITS AND EQUIPMENT OF ALL TRADES SHALL BE PROPERLY COORDINATED AND SET TO MAINTAIN THE CLEARANCES REQUIRED BY APPLICABLE FEDERAL, STATE AND LOCAL CODES.
5. MOUNTING HEIGHTS SHALL BE AS INDICATED ON ARCHITECTURAL DRAWINGS.
6. CONTRACTOR TO PROVIDE (1) WIRELESS DONGLE (ANYCAST OR APPROVED EQUAL)\ FOR EACH DISPLAY.

## LEGEND NOTES

THIS SHEET IS A GENERAL LIST OF SYMBOLS AND ABBREVIATIONS AND SHALL BE USED AS A DICTIONARY TO DEFINE ITEMS INDICATED ON DRAWINGS. NOT ALL SYMBOLS OR ABBREVIATIONS ARE NECESSARILY USED ON THIS PROJECT.

## DRAWING LIST

| | |
|---|---|
| AV0.01 | AUDIO/VISUAL - LEGEND AND NOTES SHEET |
| AV1.00 | AUDIO/VISUAL - FIRST FLOOR PLAN |
| AV1.01 | AUDIO/VISUAL - SECOND FLOOR PLAN |
| AV2.00 | AUDIO/VISUAL - DETAILS SHEET |
| AV2.01 | AUDIO/VISUAL - DETAILS SHEET |
| AV2.02 | AUDIO/VISUAL - DETAILS SHEET |
| AV2.03 | AUDIO/VISUAL - DETAILS SHEET |
| AV2.04 | AUDIO/VISUAL - DETAILS SHEET |
| AV2.05 | AUDIO/VISUAL - DETAILS SHEET |
| AV2.06 | AUDIO/VISUAL - DETAILS SHEET |
| AV2.07 | AUDIO/VISUAL - DETAILS SHEET |
| AV2.08 | AUDIO/VISUAL - DETAILS SHEET |
| AV2.09 | AUDIO/VISUAL - DETAILS SHEET |
| AV2.10 | AUDIO/VISUAL - DETAILS SHEET |

# JOSLIN RECREATION CENTER - CPF RENOVATION

17 Hyatt St., Providence, RI 2909

Owner:
City of Providence, Dept. of Public Property
25 Dorrance Street
Providence, Rhode Island 02903


ROWSE Architects
400 Massasoit Avenue
Suite 300, Second Floor
East Providence, Rhode Island
p. (401) 331-9200

2 Hampshire Street
Suite 106, First Floor
Foxboro, Massachusetts
p. (774) 215-0290
rowse@rowsearchitects.com



OWNERSHIP AND USE OF DOCUMENTS, DRAWINGS AND SPECIFICATIONS AS INSTRUMENTS OF PROFESSIONAL SERVICE, ARE, AND SHALL REMAIN, THE PROPERTY OF THE ARCHITECT. THESE DOCUMENTS ARE NOT TO BE USED, IN WHOLE OR IN PART, FOR ANY OTHER PROJECTS OR PURPOSES, OR BY ANY OTHER PARTIES THAN THOSE PROPERLY AUTHORIZED BY CONTRACT WITHOUT THE EXPRESS AUTHORIZATION OF THE ARCHITECT.


## GENERAL NOTES

1. CONTRACTOR SHALL VISIT SITE, PRIOR TO BID, AND CAREFULLY INVESTIGATE AND EXAMINE THE AREA OF WORK SO AS TO SATISFY HIMSELF AS TO THE NATURE AND LOCATION OF THE WORK. CONTRACTOR TO NOTE THE CHARACTER, QUALITY, QUANTITIES OF MATERIALS REQUIRED AND DIFFICULTIES TO BE ENCOUNTERED, THE KIND AND EXTENT OF EQUIPMENT AND FACILITIES NEEDED FOR PERFORMANCE OF THE WORK AND OTHER ITEMS WHICH MAY, IN ANY WAY, AFFECT THE WORK OR CONTRACTORS PERFORMANCE.
2. DRAWINGS DO NOT INCLUDE NECESSARY COMPONENTS FOR CONSTRUCTION SAFETY.

MELISSA ANNE SIERRA
No. 11812
REGISTERED PROFESSIONAL ENGINEER
ELECTRICAL

**Date:** MAY 05, 2025
**Drawn by:** JAS **Proj. Mgr.:** MG

**Revisions**

| No. | Date | Description |
|---|---|---|
| | | |
| | | |
| | | |
| | | |
| | | |
| | | |
| | | |
| | | |

AUDIO/VISUAL
LEGEND AND NOTES SHEET

AV0.01

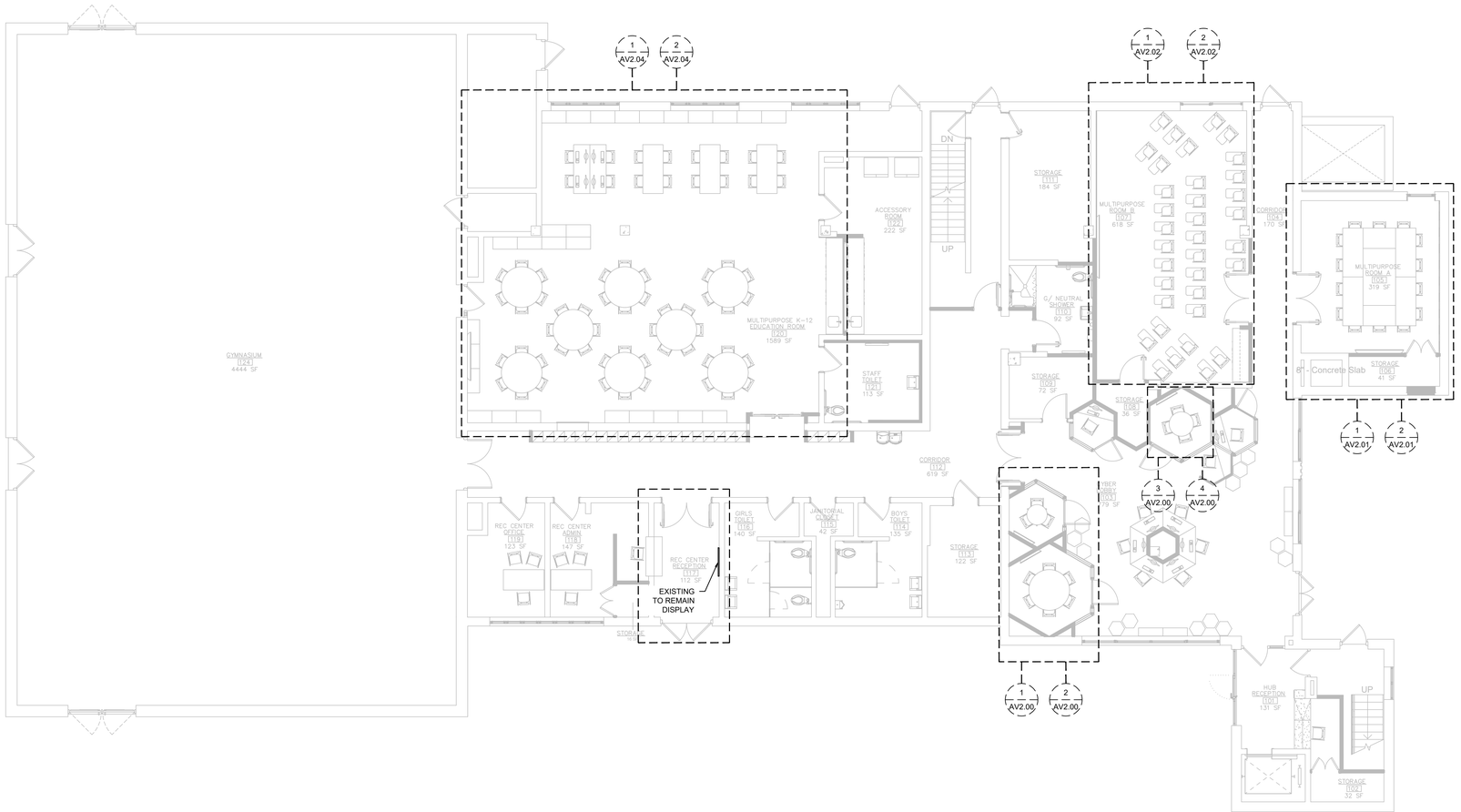


1 AV1.00

## AUDIO/VISUAL - FIRST FLOOR PLAN

SCALE: 1/8" = 1'-0"

# JOSLIN RECREATION CENTER - CPF RENOVATION

17 Hyatt St., Providence, RI 2909

Owner:
City of Providence, Dept. of Public Property
25 Dorrance Street
Providence, Rhode Island 02903


Rowse Architects

400 Massasoit Avenue
Suite 300, Second Floor
East Providence, Rhode Island
p. (401) 331-9200

2 Hampshire Street
Suite 106, First Floor
Foxboro, Massachusetts
p. (774) 215-0290

rowse@rowsearchitects.com



**OWNERSHIP AND USE OF DOCUMENTS, DRAWINGS AND SPECIFICATIONS AS INSTRUMENTS OF PROFESSIONAL SERVICE, ARE, AND SHALL REMAIN, THE PROPERTY OF THE ARCHITECT. THESE DOCUMENTS ARE NOT TO BE USED, IN WHOLE OR IN PART, FOR ANY OTHER PROJECTS OR PURPOSES, OR BY ANY OTHER PARTIES THAN THOSE PROPERLY AUTHORIZED BY CONTRACT WITHOUT THE EXPRESS AUTHORIZATION OF THE ARCHITECT.**


## GENERAL NOTES

1. CONTRACTOR SHALL VISIT SITE, PRIOR TO BID, AND CAREFULLY INVESTIGATE AND EXAMINE THE AREA OF WORK SO AS TO SATISFY HIMSELF AS TO THE NATURE AND LOCATION OF THE WORK. CONTRACTOR TO NOTE THE CHARACTER, QUALITY, QUANTITIES OF MATERIALS REQUIRED AND DIFFICULTIES TO BE ENCOUNTERED, THE KIND AND EXTENT OF EQUIPMENT AND FACILITIES NEEDED FOR PERFORMANCE OF THE WORK AND OTHER ITEMS WHICH MAY, IN ANY WAY, AFFECT THE WORK OR CONTRACTORS PERFORMANCE.

2. DRAWINGS DO NOT INCLUDE NECESSARY COMPONENTS FOR CONSTRUCTION SAFETY.

MELISSA ANNE DERKA
No. 11812
REGISTERED PROFESSIONAL ENGINEER
ELECTRICAL

**Date:** MAY 05, 2025

**Drawn by:** JAS **Proj. Mgr.:** MG

**Revisions**

| No. | Date | Description |
|---|---|---|
| | | |
| | | |
| | | |
| | | |
| | | |
| | | |
| | | |
| | | |

AUDIO/VISUAL
FIRST FLOOR PLAN

# AV1.00

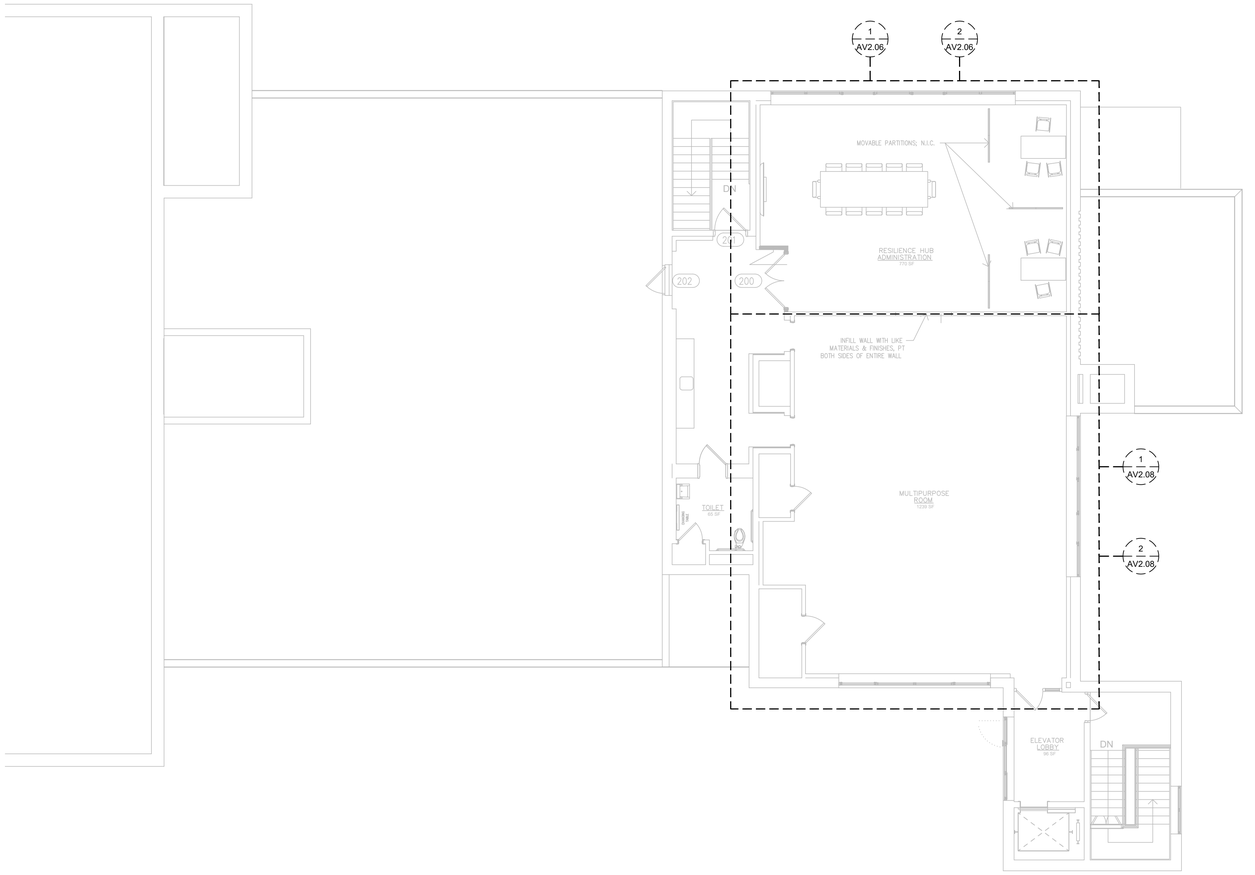


1
AV1.01

## AUDIO/VISUAL - SECOND FLOOR PLAN

SCALE: 1/8" = 1'-0"

# JOSLIN RECREATION CENTER - CPF RENOVATION

17 Hyatt St., Providence, RI 2909

Owner:
City of Providence, Dept. of Public Property
25 Dorrance Street
Providence, Rhode Island 02903


ROWSE Architects

400 Massasoit Avenue
Suite 300, Second Floor
East Providence, Rhode Island
p. (401) 331-9200

2 Hampshire Street
Suite 106, First Floor
Foxboro, Massachusetts
p. (774) 215-0290
rowse@rowsearchitects.com



**OWNERSHIP AND USE OF DOCUMENTS, DRAWINGS AND SPECIFICATIONS AS INSTRUMENTS OF PROFESSIONAL SERVICE, ARE, AND SHALL REMAIN, THE PROPERTY OF THE ARCHITECT. THESE DOCUMENTS ARE NOT TO BE USED, IN WHOLE OR IN PART, FOR ANY OTHER PROJECTS OR PURPOSES, OR BY ANY OTHER PARTIES THAN THOSE PROPERLY AUTHORIZED BY CONTRACT WITHOUT THE EXPRESS AUTHORIZATION OF THE ARCHITECT.**


## GENERAL NOTES

1. CONTRACTOR SHALL VISIT SITE, PRIOR TO BID, AND CAREFULLY INVESTIGATE AND EXAMINE THE AREA OF WORK SO AS TO SATISFY HIMSELF AS TO THE NATURE AND LOCATION OF THE WORK. CONTRACTOR TO NOTE THE CHARACTER, QUALITY, QUANTITIES OF MATERIALS REQUIRED AND DIFFICULTIES TO BE ENCOUNTERED, THE KIND AND EXTENT OF EQUIPMENT AND FACILITIES NEEDED FOR PERFORMANCE OF THE WORK AND OTHER ITEMS WHICH MAY, IN ANY WAY, AFFECT THE WORK OR CONTRACTORS PERFORMANCE.

2. DRAWINGS DO NOT INCLUDE NECESSARY COMPONENTS FOR CONSTRUCTION SAFETY.

MELISSA ANNE SIERRA
No. 17812
REGISTERED PROFESSIONAL ENGINEER
ELECTRICAL

**Date:** MAY 05, 2025
**Drawn by:** JAS **Proj. Mgr.:** MG

**Revisions**

| No. | Date | Description |
|---|---|---|
| | | |
| | | |
| | | |
| | | |
| | | |
| | | |
| | | |
| | | |

AUDIO/VISUAL
SECOND FLOOR PLAN

# AV1.01

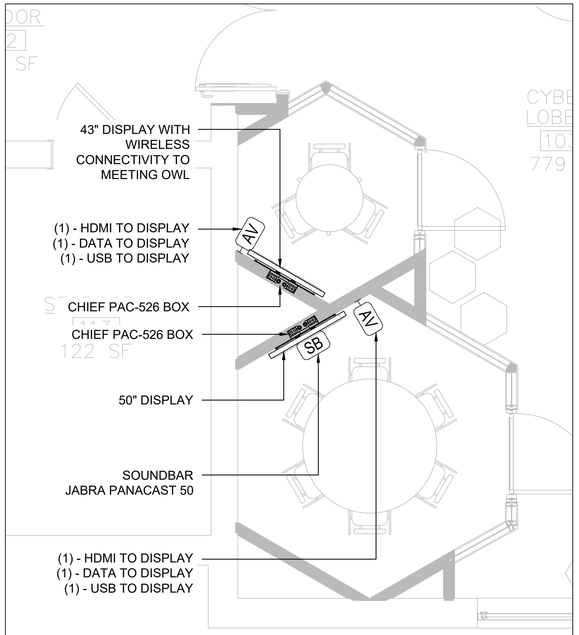


1 AV2.00 — AV - MEETING ROOMS - EQUIPMENT PLAN

SCALE: 3/8" = 1'-0"

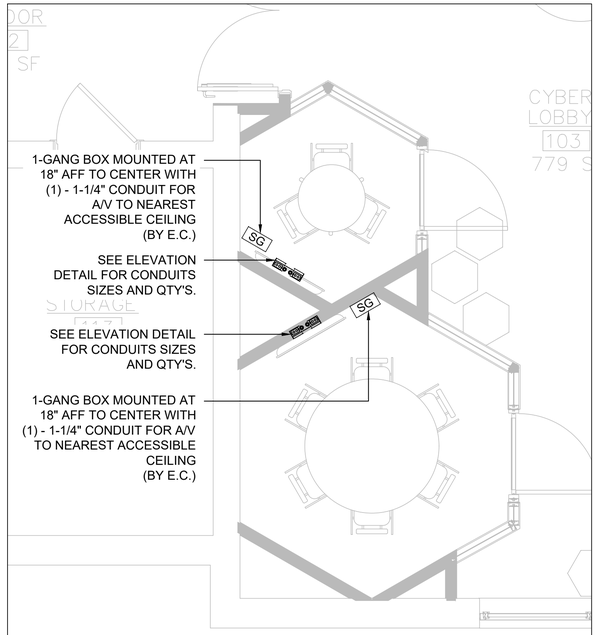


2 AV2.00 — AV - MEETING ROOMS - ROUGH-IN PLAN

SCALE: 3/8" = 1'-0"

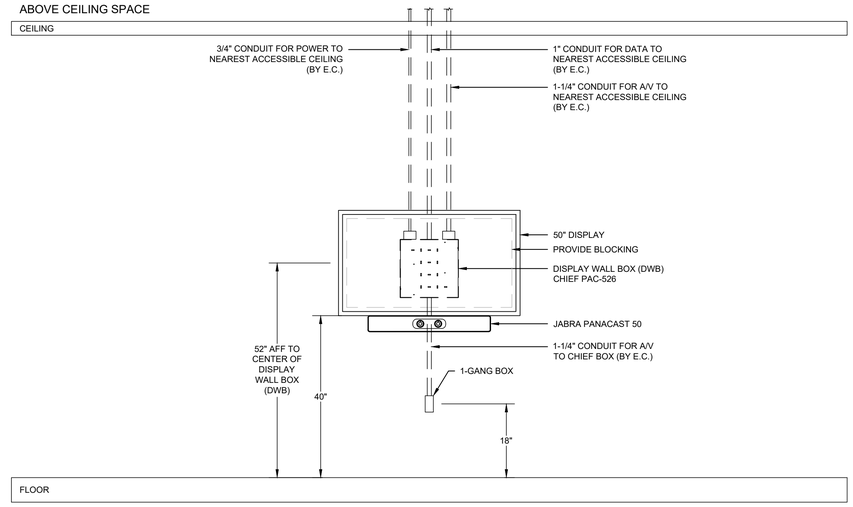


SCREEN SIZE:
50"

3 AV2.00 — AV - MEETING ROOMS - 50" DISPLAY ELEVATION

SCALE: N.T.S.

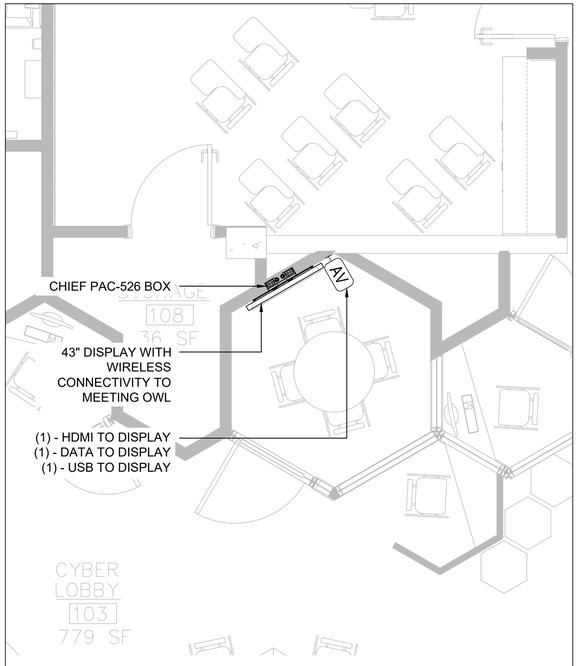


4 AV2.00 — AV - MEETING ROOMS - EQUIPMENT PLAN

SCALE: 3/8" = 1'-0"

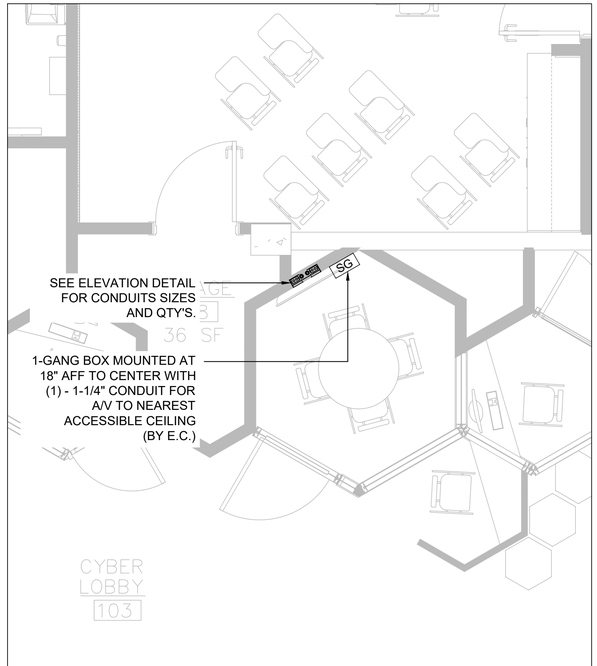


5 AV2.00 — AV - MEETING ROOMS - ROUGH-IN PLAN

SCALE: 3/8" = 1'-0"

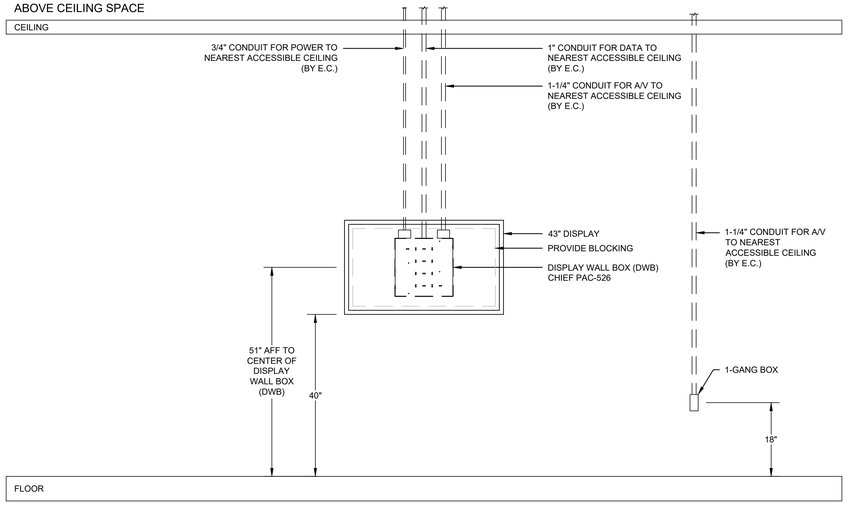


SCREEN SIZE:
43"

6 AV2.00 — AV - MEETING ROOMS - 43" DISPLAY ELEVATION

SCALE: N.T.S.

# JOSLIN RECREATION CENTER - CPF RENOVATION

17 Hyatt St., Providence, RI 2909

Owner:
City of Providence, Dept. of Public Property
25 Dorrance Street
Providence, Rhode Island 02903

ROWSE Architects
400 Massasoit Avenue
Suite 300, Second Floor
East Providence, Rhode Island
p. (401) 331-9200

2 Hampshire Street
Suite 106, First Floor
Foxboro, Massachusetts
p. (774) 215-0290
rowse@rowsearchitects.com

**OWNERSHIP AND USE OF DOCUMENTS, DRAWINGS AND SPECIFICATIONS AS INSTRUMENTS OF PROFESSIONAL SERVICE, ARE, AND SHALL REMAIN, THE PROPERTY OF THE ARCHITECT. THESE DOCUMENTS ARE NOT TO BE USED, IN WHOLE OR IN PART, FOR ANY OTHER PROJECTS OR PURPOSES, OR BY ANY OTHER PARTIES THAN THOSE PROPERLY AUTHORIZED BY CONTRACT WITHOUT THE EXPRESS AUTHORIZATION OF THE ARCHITECT.**

## GENERAL NOTES

1. CONTRACTOR SHALL VISIT SITE, PRIOR TO BID, AND CAREFULLY INVESTIGATE AND EXAMINE THE AREA OF WORK SO AS TO SATISFY HIMSELF AS TO THE NATURE AND LOCATION OF THE WORK. CONTRACTOR TO NOTE THE CHARACTER, QUALITY, QUANTITIES OF MATERIALS REQUIRED AND DIFFICULTIES TO BE ENCOUNTERED, THE KIND AND EXTENT OF EQUIPMENT AND FACILITIES NEEDED FOR PERFORMANCE OF THE WORK AND OTHER ITEMS WHICH MAY, IN ANY WAY, AFFECT THE WORK OR CONTRACTORS PERFORMANCE.

2. DRAWINGS DO NOT INCLUDE NECESSARY COMPONENTS FOR CONSTRUCTION SAFETY.

MELISSA ANNE SIERRA
No. 11812
REGISTERED PROFESSIONAL ENGINEER
ELECTRICAL

**Date:** MAY 05, 2025
**Drawn by:** JAS **Proj. Mgr.:** MG
**Revisions**

| No. | Date | Description |
|---|---|---|
| | | |
| | | |
| | | |
| | | |
| | | |
| | | |
| | | |

AUDIO/VISUAL DETAILS SHEET

# AV2.00

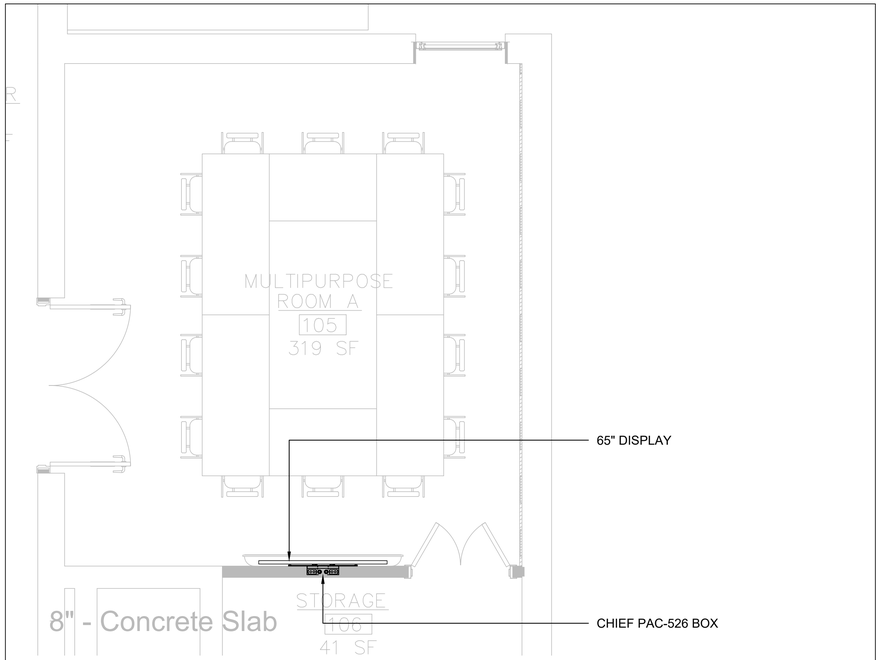


1 AV2.01 — AV - MULTIPURPOSE ROOM 105 - EQUIPMENT PLAN

SCALE: 3/8" = 1'-0"

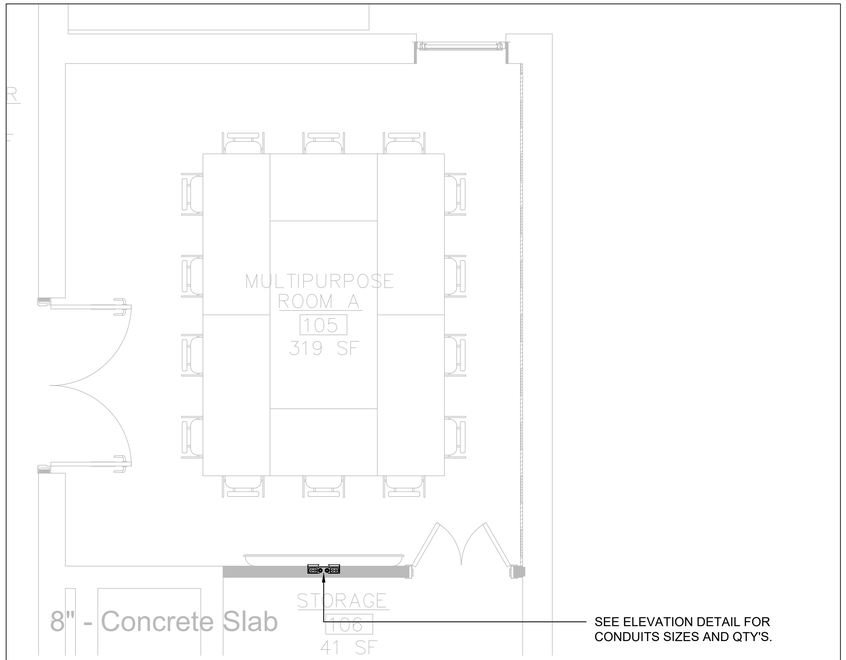


2 AV2.01 — AV - MULTIPURPOSE ROOM 105 - ROUGH-IN PLAN

SCALE: 3/8" = 1'-0"

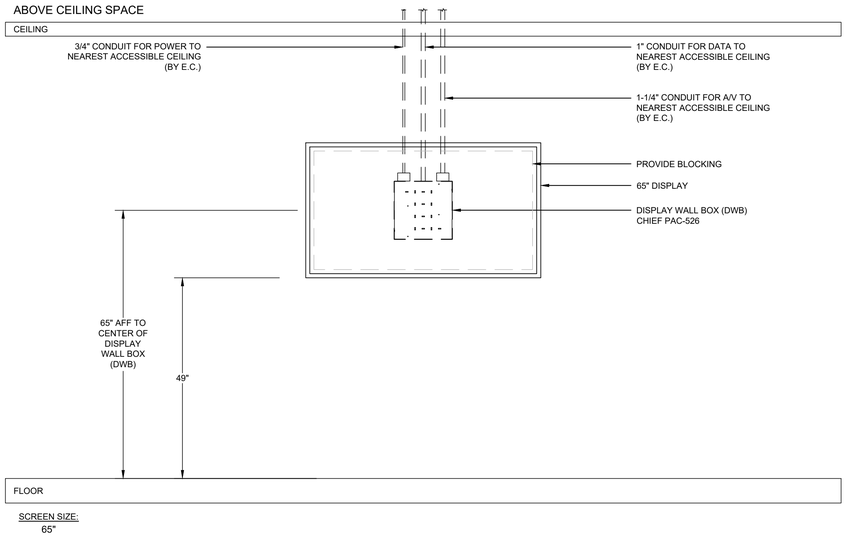


3 AV2.01 — AV - MULTIPURPOSE ROOM 105 - ELEVATION

SCALE: N.T.S.

# JOSLIN RECREATION CENTER - CPF RENOVATION

17 Hyatt St., Providence, RI 2909

Owner:
City of Providence, Dept. of Public Property
25 Dorrance Street
Providence, Rhode Island 02903


Rowse Architects

400 Massasoit Avenue
Suite 300, Second Floor
East Providence, Rhode Island
p. (401) 331-9200

2 Hampshire Street
Suite 106, First Floor
Foxboro, Massachusetts
p. (774) 215-0290

rowse@rowsearchitects.com



**OWNERSHIP AND USE OF DOCUMENTS, DRAWINGS AND SPECIFICATIONS AS INSTRUMENTS OF PROFESSIONAL SERVICE, ARE, AND SHALL REMAIN, THE PROPERTY OF THE ARCHITECT. THESE DOCUMENTS ARE NOT TO BE USED, IN WHOLE OR IN PART, FOR ANY OTHER PROJECTS OR PURPOSES, OR BY ANY OTHER PARTIES THAN THOSE PROPERLY AUTHORIZED BY CONTRACT WITHOUT THE EXPRESS AUTHORIZATION OF THE ARCHITECT.**


## GENERAL NOTES

1. CONTRACTOR SHALL VISIT SITE, PRIOR TO BID, AND CAREFULLY INVESTIGATE AND EXAMINE THE AREA OF WORK SO AS TO SATISFY HIMSELF AS TO THE NATURE AND LOCATION OF THE WORK. CONTRACTOR TO NOTE THE CHARACTER, QUALITY, QUANTITIES OF MATERIALS REQUIRED AND DIFFICULTIES TO BE ENCOUNTERED, THE KIND AND EXTENT OF EQUIPMENT AND FACILITIES NEEDED FOR PERFORMANCE OF THE WORK AND OTHER ITEMS WHICH MAY, IN ANY WAY, AFFECT THE WORK OR CONTRACTORS PERFORMANCE.

2. DRAWINGS DO NOT INCLUDE NECESSARY COMPONENTS FOR CONSTRUCTION SAFETY.

MELISSA ANNE SIERRA
No. 11812
REGISTERED PROFESSIONAL ENGINEER
ELECTRICAL

**Date:** MAY 05, 2025

**Drawn by:** JAS **Proj. Mgr.:** MG

**Revisions**

| No. | Date | Description |
|---|---|---|
| | | |
| | | |
| | | |
| | | |
| | | |
| | | |
| | | |

AUDIO/VISUAL
DETAILS SHEET

# AV2.01

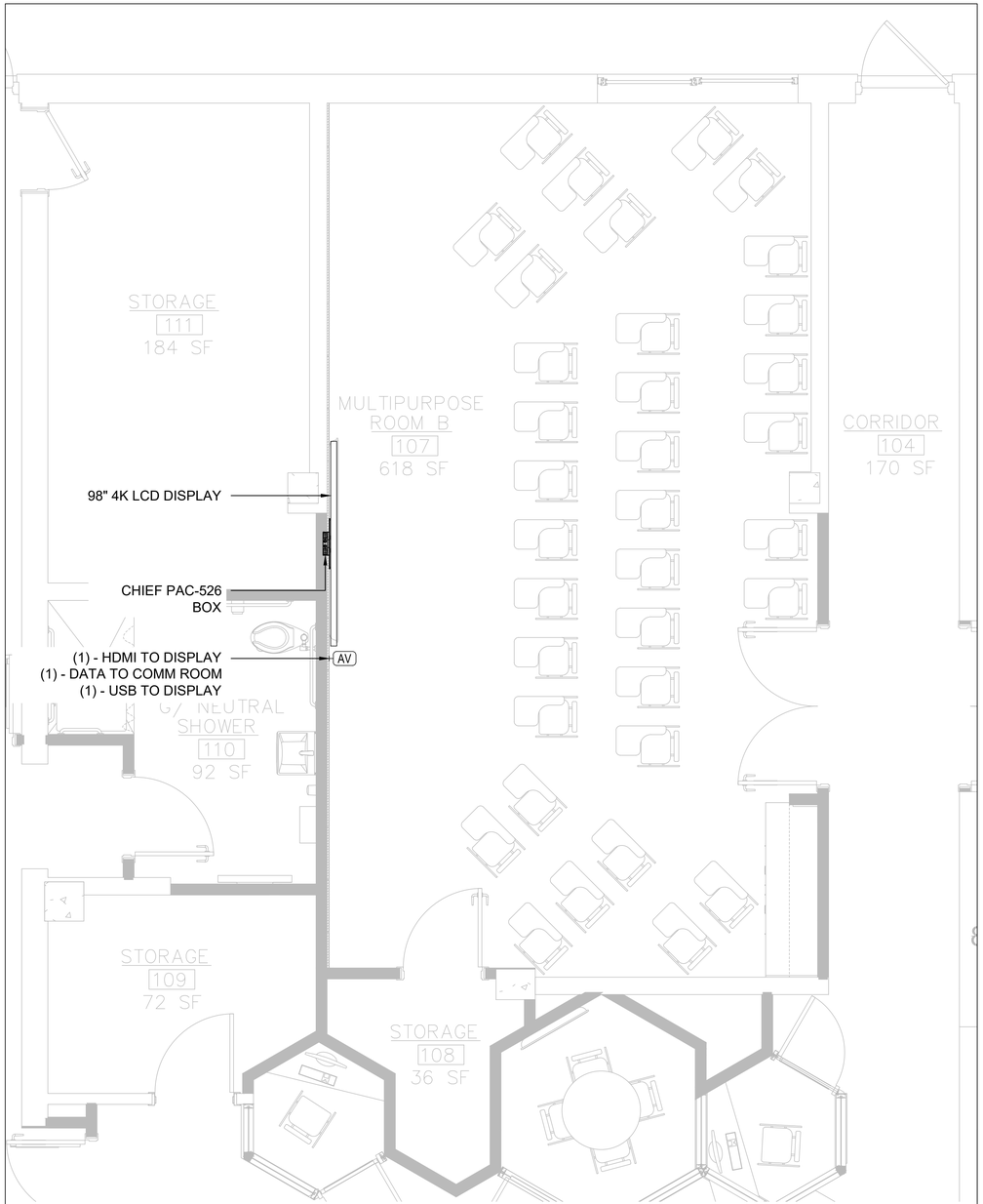


1 AV2.02 AV - MULTIPURPOSE ROOM 107 - EQUIPMENT PLAN

SCALE: 3/8" = 1'-0"

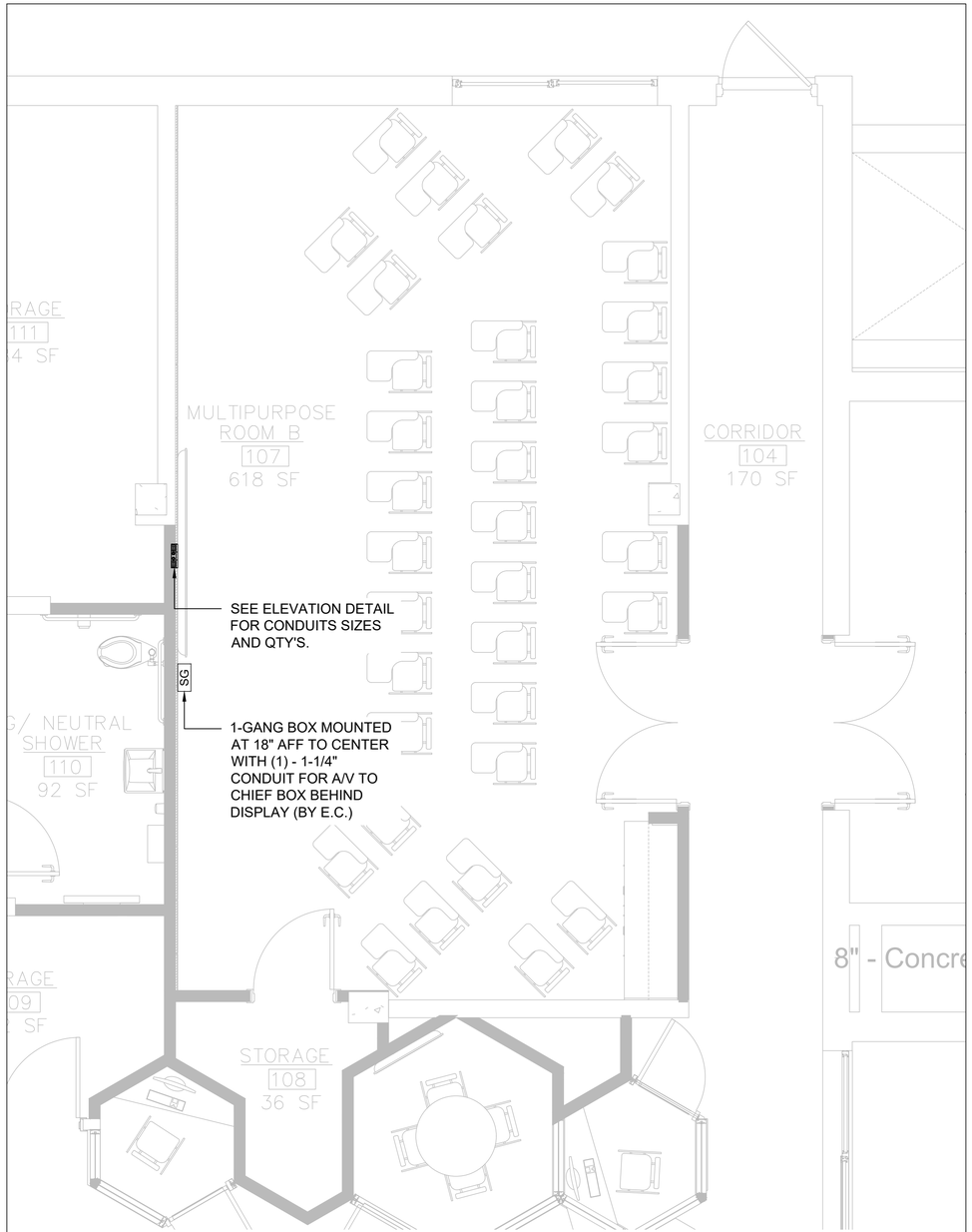


2 AV2.02 AV - MULTIPURPOSE ROOM 107 - ROUGH-IN PLAN

SCALE: 3/8" = 1'-0"

# JOSLIN RECREATION CENTER - CPF RENOVATION

17 Hyatt St., Providence, RI 2909

Owner:
City of Providence, Dept. of Public Property
25 Dorrance Street
Providence, Rhode Island 02903


Rowse Architects

400 Massasoit Avenue
Suite 300, Second Floor
East Providence, Rhode Island
p. (401) 331-9200

2 Hampshire Street
Suite 106, First Floor
Foxboro, Massachusetts
p. (774) 215-0290

rowse@rowsearchitects.com



**OWNERSHIP AND USE OF DOCUMENTS, DRAWINGS AND SPECIFICATIONS AS INSTRUMENTS OF PROFESSIONAL SERVICE, ARE, AND SHALL REMAIN, THE PROPERTY OF THE ARCHITECT. THESE DOCUMENTS ARE NOT TO BE USED, IN WHOLE OR IN PART, FOR ANY OTHER PROJECTS OR PURPOSES, OR BY ANY OTHER PARTIES THAN THOSE PROPERLY AUTHORIZED BY CONTRACT WITHOUT THE EXPRESS AUTHORIZATION OF THE ARCHITECT.**


## GENERAL NOTES

1. CONTRACTOR SHALL VISIT SITE, PRIOR TO BID, AND CAREFULLY INVESTIGATE AND EXAMINE THE AREA OF WORK SO AS TO SATISFY HIMSELF AS TO THE NATURE AND LOCATION OF THE WORK. CONTRACTOR TO NOTE THE CHARACTER, QUALITY, QUANTITIES OF MATERIALS REQUIRED AND DIFFICULTIES TO BE ENCOUNTERED, THE KIND AND EXTENT OF EQUIPMENT AND FACILITIES NEEDED FOR PERFORMANCE OF THE WORK AND OTHER ITEMS WHICH MAY, IN ANY WAY, AFFECT THE WORK OR CONTRACTORS PERFORMANCE.

2. DRAWINGS DO NOT INCLUDE NECESSARY COMPONENTS FOR CONSTRUCTION SAFETY.

MELISSA ANNE SIERRA
No. 11812
REGISTERED PROFESSIONAL ENGINEER
ELECTRICAL

**Date:** MAY 05, 2025

**Drawn by:** JAS **Proj. Mgr.:** MG

**Revisions**

| No. | Date | Description |
|---|---|---|
| | | |
| | | |
| | | |
| | | |
| | | |
| | | |
| | | |
| | | |

AUDIO/VISUAL
DETAILS SHEET

# AV2.02

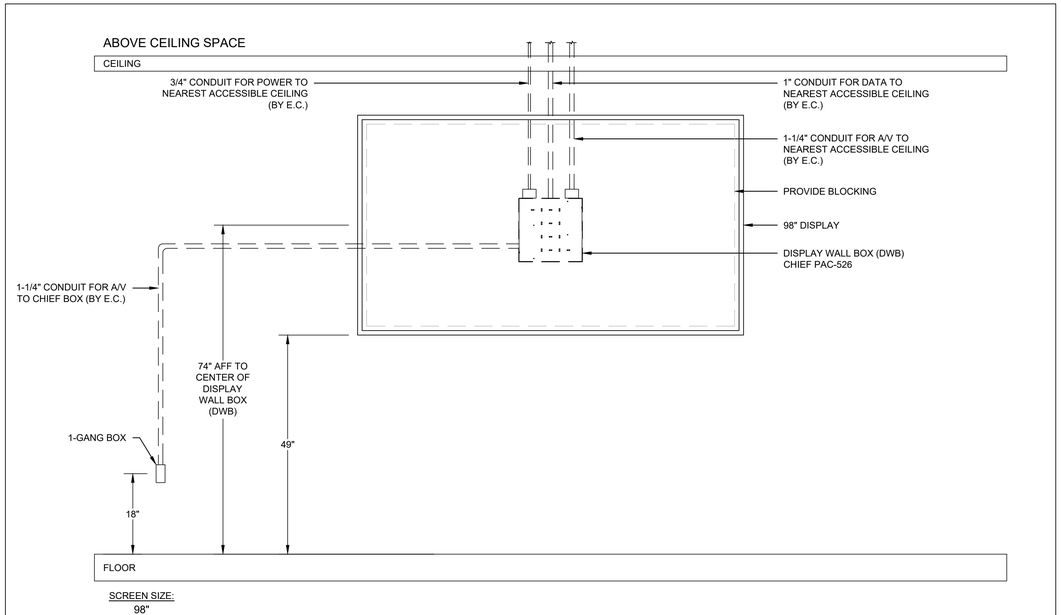


1
AV2.03

## AV - MULTIPURPOSE ROOM 106 - ELEVATION

SCALE: 3/4" = 1'-0"

# JOSLIN RECREATION CENTER - CPF RENOVATION

17 Hyatt St., Providence, RI 2909

Owner:
City of Providence, Dept. of Public Property
25 Dorrance Street
Providence, Rhode Island 02903


Rowse Architects

400 Massasoit Avenue
Suite 300, Second Floor
East Providence, Rhode Island
p. (401) 331-9200

2 Hampshire Street
Suite 106, First Floor
Foxboro, Massachusetts
p. (774) 215-0290

rowse@rowsearchitects.com



**OWNERSHIP AND USE OF DOCUMENTS, DRAWINGS AND SPECIFICATIONS AS INSTRUMENTS OF PROFESSIONAL SERVICE, ARE, AND SHALL REMAIN, THE PROPERTY OF THE ARCHITECT. THESE DOCUMENTS ARE NOT TO BE USED, IN WHOLE OR IN PART, FOR ANY OTHER PROJECTS OR PURPOSES, OR BY ANY OTHER PARTIES THAN THOSE PROPERLY AUTHORIZED BY CONTRACT WITHOUT THE EXPRESS AUTHORIZATION OF THE ARCHITECT.**


## GENERAL NOTES

1. CONTRACTOR SHALL VISIT SITE, PRIOR TO BID, AND CAREFULLY INVESTIGATE AND EXAMINE THE AREA OF WORK SO AS TO SATISFY HIMSELF AS TO THE NATURE AND LOCATION OF THE WORK. CONTRACTOR TO NOTE THE CHARACTER, QUALITY, QUANTITIES OF MATERIALS REQUIRED AND DIFFICULTIES TO BE ENCOUNTERED, THE KIND AND EXTENT OF EQUIPMENT AND FACILITIES NEEDED FOR PERFORMANCE OF THE WORK AND OTHER ITEMS WHICH MAY, IN ANY WAY, AFFECT THE WORK OR CONTRACTORS PERFORMANCE.

2. DRAWINGS DO NOT INCLUDE NECESSARY COMPONENTS FOR CONSTRUCTION SAFETY.

MELISSA ANNE SIERRA
No. 11812
REGISTERED PROFESSIONAL ENGINEER
ELECTRICAL

**Date:** MAY 05, 2025

**Drawn by:** JAS **Proj. Mgr.:** MG

**Revisions**

| No. | Date | Description |
|---|---|---|
| | | |
| | | |
| | | |
| | | |
| | | |
| | | |
| | | |
| | | |

AUDIO/VISUAL
DETAILS SHEET

# AV2.03

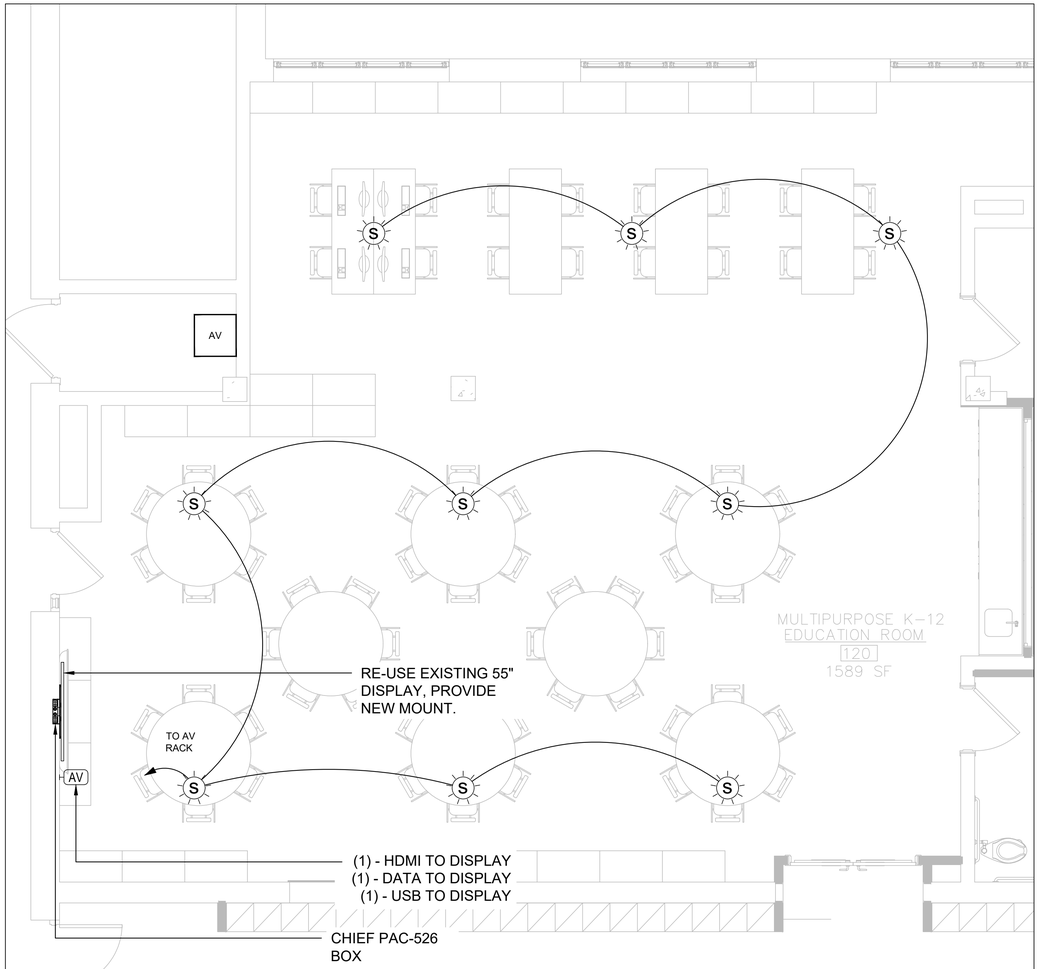


1 AV2.04 AV - MULTIPURPOSE ROOM K-12 - EQUIPMENT PLAN

SCALE: 1/8" = 1'-0"

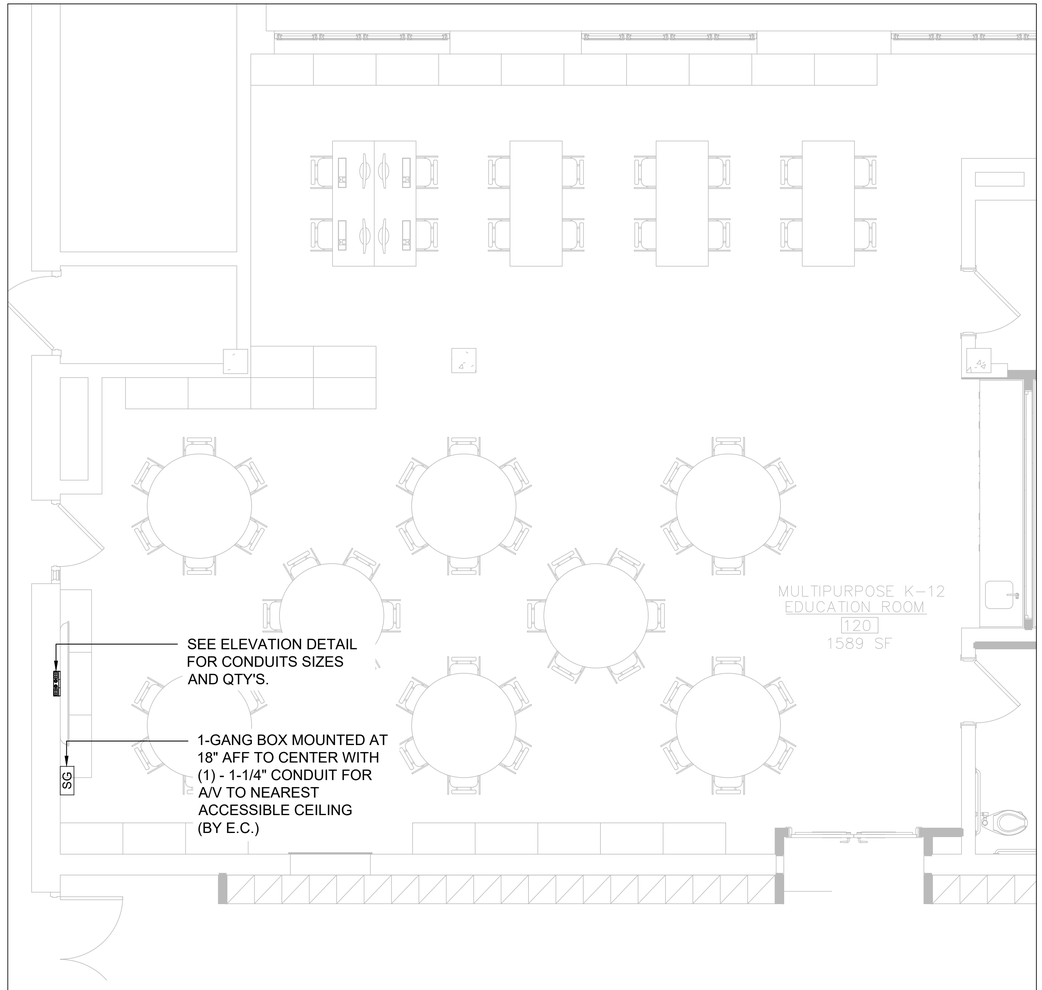


2 AV2.04 AV - MULTIPURPOSE ROOM K-12 - ROUGH-IN PLAN

SCALE: 1/8" = 1'-0"

# JOSLIN RECREATION CENTER - CPF RENOVATION

17 Hyatt St., Providence, RI 2909

Owner:
City of Providence, Dept. of Public Property
25 Dorrance Street
Providence, Rhode Island 02903

ROWSE Architects
400 Massasoit Avenue
Suite 300, Second Floor
East Providence, Rhode Island
p. (401) 331-9200

2 Hampshire Street
Suite 106, First Floor
Foxboro, Massachusetts
p. (774) 215-0290
rowse@rowsearchitects.com

OWNERSHIP AND USE OF DOCUMENTS, DRAWINGS AND SPECIFICATIONS AS INSTRUMENTS OF PROFESSIONAL SERVICE, ARE, AND SHALL REMAIN, THE PROPERTY OF THE ARCHITECT. THESE DOCUMENTS ARE NOT TO BE USED, IN WHOLE OR IN PART, FOR ANY OTHER PROJECTS OR PURPOSES, OR BY ANY OTHER PARTIES THAN THOSE PROPERLY AUTHORIZED BY CONTRACT WITHOUT THE EXPRESS AUTHORIZATION OF THE ARCHITECT.

## GENERAL NOTES

1. CONTRACTOR SHALL VISIT SITE, PRIOR TO BID, AND CAREFULLY INVESTIGATE AND EXAMINE THE AREA OF WORK SO AS TO SATISFY HIMSELF AS TO THE NATURE AND LOCATION OF THE WORK. CONTRACTOR TO NOTE THE CHARACTER, QUALITY, QUANTITIES OF MATERIALS REQUIRED AND DIFFICULTIES TO BE ENCOUNTERED, THE KIND AND EXTENT OF EQUIPMENT AND FACILITIES NEEDED FOR PERFORMANCE OF THE WORK AND OTHER ITEMS WHICH MAY, IN ANY WAY, AFFECT THE WORK OR CONTRACTORS PERFORMANCE.

2. DRAWINGS DO NOT INCLUDE NECESSARY COMPONENTS FOR CONSTRUCTION SAFETY.

MELISSA ANNE SIERRA
No. 11812
REGISTERED PROFESSIONAL ENGINEER
ELECTRICAL

**Date:** MAY 05, 2025

**Drawn by:** JAS **Proj. Mgr.:** MG

**Revisions**

| No. | Date | Description |
|---|---|---|
| | | |
| | | |
| | | |
| | | |
| | | |
| | | |
| | | |
| | | |

AUDIO/VISUAL
DETAILS SHEET

# AV2.04

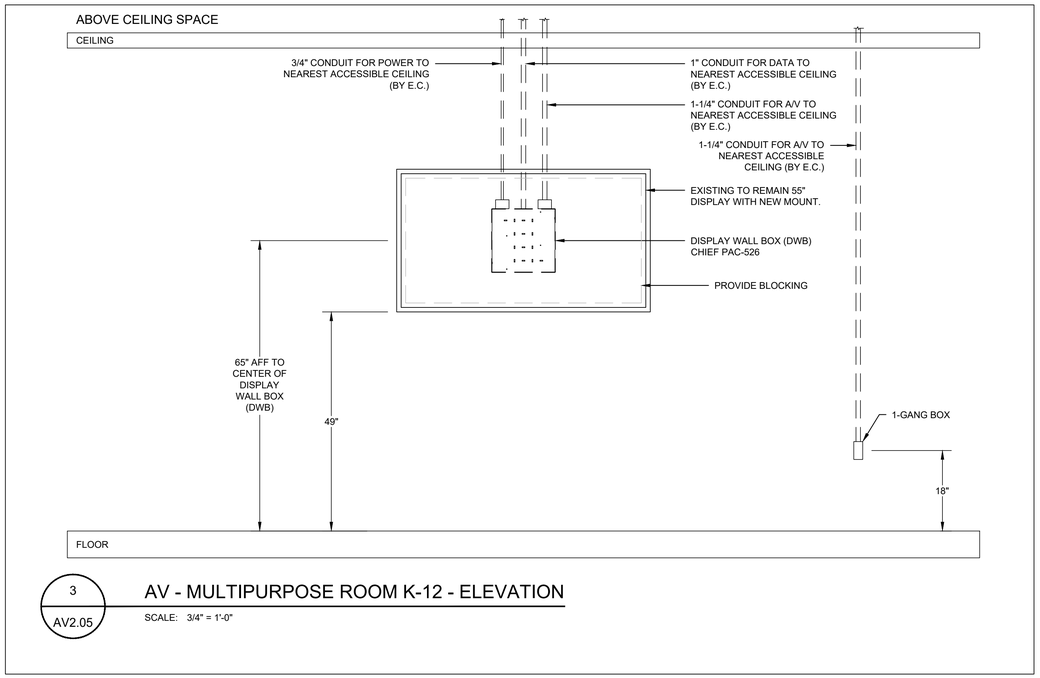


3
AV2.05

## AV - MULTIPURPOSE ROOM K-12 - ELEVATION

SCALE: 3/4" = 1'-0"

# JOSLIN RECREATION CENTER - CPF RENOVATION

17 Hyatt St., Providence, RI 2909

Owner:
City of Providence, Dept. of Public Property
25 Dorrance Street
Providence, Rhode Island 02903


Rowse Architects

400 Massasoit Avenue
Suite 300, Second Floor
East Providence, Rhode Island
p. (401) 331-9200

2 Hampshire Street
Suite 106, First Floor
Foxboro, Massachusetts
p. (774) 215-0290

rowse@rowsearchitects.com



**OWNERSHIP AND USE OF DOCUMENTS, DRAWINGS AND SPECIFICATIONS AS INSTRUMENTS OF PROFESSIONAL SERVICE, ARE, AND SHALL REMAIN, THE PROPERTY OF THE ARCHITECT. THESE DOCUMENTS ARE NOT TO BE USED, IN WHOLE OR IN PART, FOR ANY OTHER PROJECTS OR PURPOSES, OR BY ANY OTHER PARTIES THAN THOSE PROPERLY AUTHORIZED BY CONTRACT WITHOUT THE EXPRESS AUTHORIZATION OF THE ARCHITECT.**


## GENERAL NOTES

1. CONTRACTOR SHALL VISIT SITE, PRIOR TO BID, AND CAREFULLY INVESTIGATE AND EXAMINE THE AREA OF WORK SO AS TO SATISFY HIMSELF AS TO THE NATURE AND LOCATION OF THE WORK. CONTRACTOR TO NOTE THE CHARACTER, QUALITY, QUANTITIES OF MATERIALS REQUIRED AND DIFFICULTIES TO BE ENCOUNTERED, THE KIND AND EXTENT OF EQUIPMENT AND FACILITIES NEEDED FOR PERFORMANCE OF THE WORK AND OTHER ITEMS WHICH MAY, IN ANY WAY, AFFECT THE WORK OR CONTRACTOR'S PERFORMANCE.

2. DRAWINGS DO NOT INCLUDE NECESSARY COMPONENTS FOR CONSTRUCTION SAFETY.

MELISSA ANNE SIERRA
No. 11812
REGISTERED PROFESSIONAL ENGINEER
ELECTRICAL

**Date:** MAY 05, 2025

**Drawn by:** JAS **Proj. Mgr.:** MG

**Revisions**

| No. | Date | Description |
|---|---|---|
| | | |
| | | |
| | | |
| | | |
| | | |
| | | |
| | | |
| | | |

AUDIO/VISUAL
DETAILS SHEET

# AV2.05

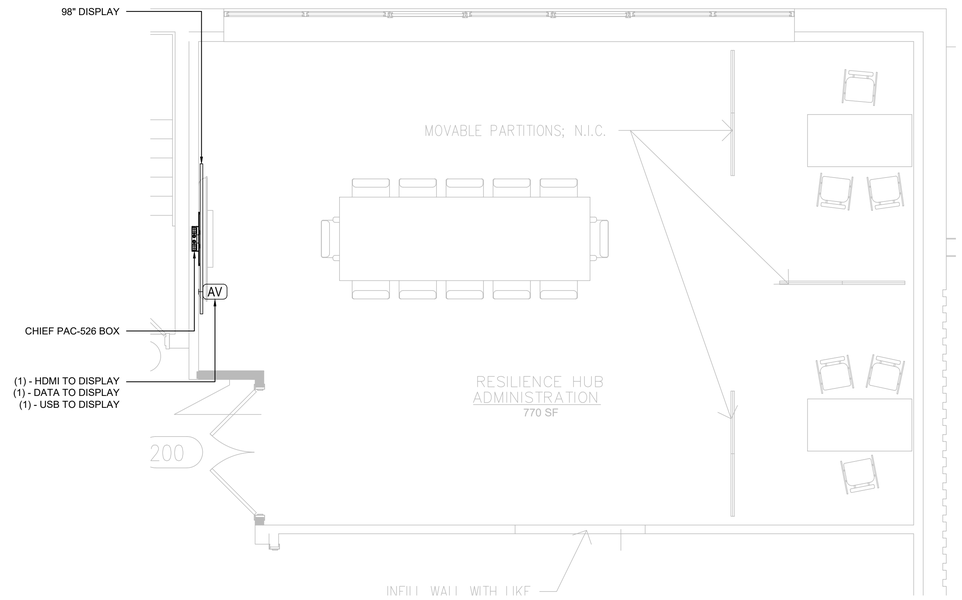


1 / AV2.06

## AV - RESILIENCE HUB - EQUIPMENT PLAN

SCALE: 1/8" = 1'-0"

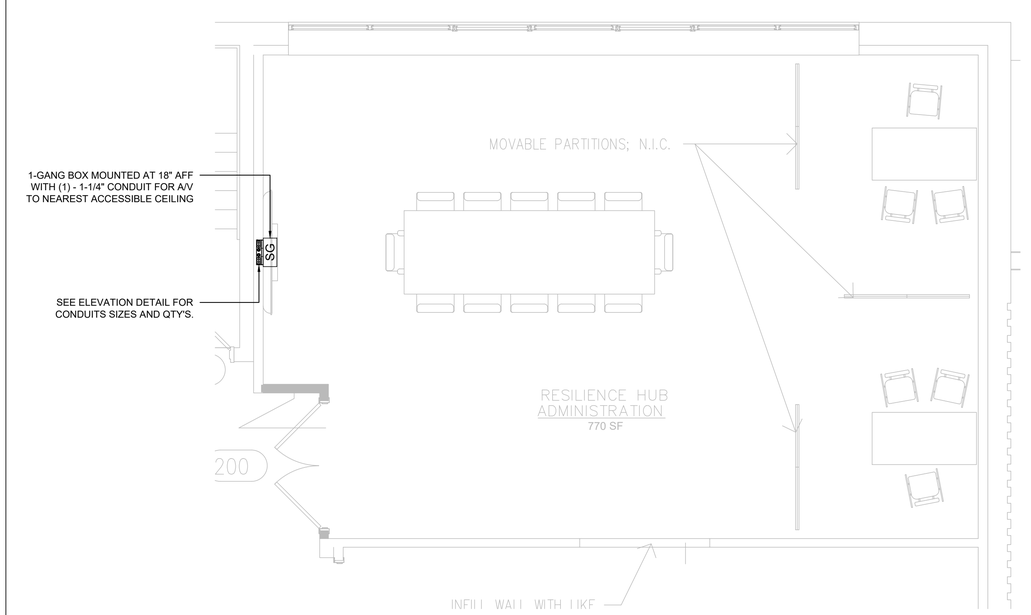


2 / AV2.06

## AV - RESILIENCE HUB - ROUGH-IN PLAN

SCALE: 1/8" = 1'-0"

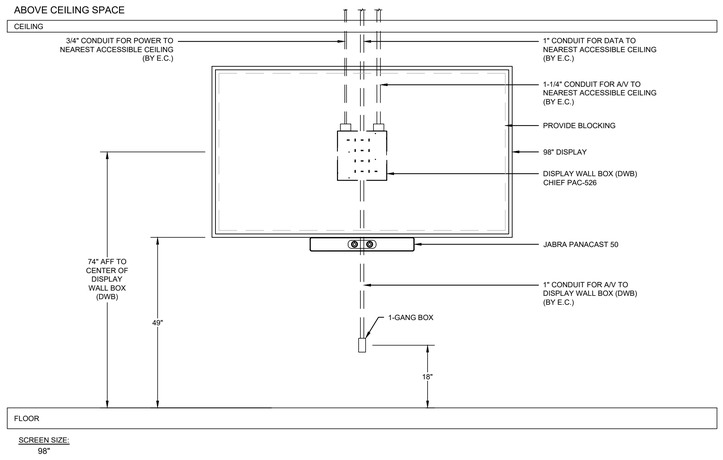


1 / AV2.08

## AV - RESILIENCE HUB - ELEVATION

SCALE: 3/4" = 1'-0"

# JOSLIN RECREATION CENTER - CPF RENOVATION

17 Hyatt St., Providence, RI 2909

Owner:
City of Providence, Dept. of Public Property
25 Dorrance Street
Providence, Rhode Island 02903


Rowse Architects
400 Massasoit Avenue
Suite 300, Second Floor
East Providence, Rhode Island
p. (401) 331-9200

2 Hampshire Street
Suite 106, First Floor
Foxboro, Massachusetts
p. (774) 215-0290
rowse@rowsearchitects.com



**OWNERSHIP AND USE OF DOCUMENTS, DRAWINGS AND SPECIFICATIONS AS INSTRUMENTS OF PROFESSIONAL SERVICE, ARE, AND SHALL REMAIN, THE PROPERTY OF THE ARCHITECT. THESE DOCUMENTS ARE NOT TO BE USED, IN WHOLE OR IN PART, FOR ANY OTHER PROJECTS OR PURPOSES, OR BY ANY OTHER PARTIES THAN THOSE PROPERLY AUTHORIZED BY CONTRACT WITHOUT THE EXPRESS AUTHORIZATION OF THE ARCHITECT.**


## GENERAL NOTES

1. CONTRACTOR SHALL VISIT SITE, PRIOR TO BID, AND CAREFULLY INVESTIGATE AND EXAMINE THE AREA OF WORK SO AS TO SATISFY HIMSELF AS TO THE NATURE AND LOCATION OF THE WORK. CONTRACTOR TO NOTE THE CHARACTER, QUALITY, QUANTITIES OF MATERIALS REQUIRED AND DIFFICULTIES TO BE ENCOUNTERED, THE KIND AND EXTENT OF EQUIPMENT AND FACILITIES NEEDED FOR PERFORMANCE OF THE WORK AND OTHER ITEMS WHICH MAY, IN ANY WAY, AFFECT THE WORK OR CONTRACTOR'S PERFORMANCE.

2. DRAWINGS DO NOT INCLUDE NECESSARY COMPONENTS FOR CONSTRUCTION SAFETY.

MELISSA ANNE SIERRA
No. 11912
REGISTERED PROFESSIONAL ENGINEER
ELECTRICAL

**Date:** MAY 05, 2025
**Drawn by:** JAS **Proj. Mgr.:** MG

**Revisions**

| No. | Date | Description |
|---|---|---|
| | | |
| | | |
| | | |
| | | |
| | | |
| | | |
| | | |

AUDIO/VISUAL
DETAILS SHEET

# AV2.06

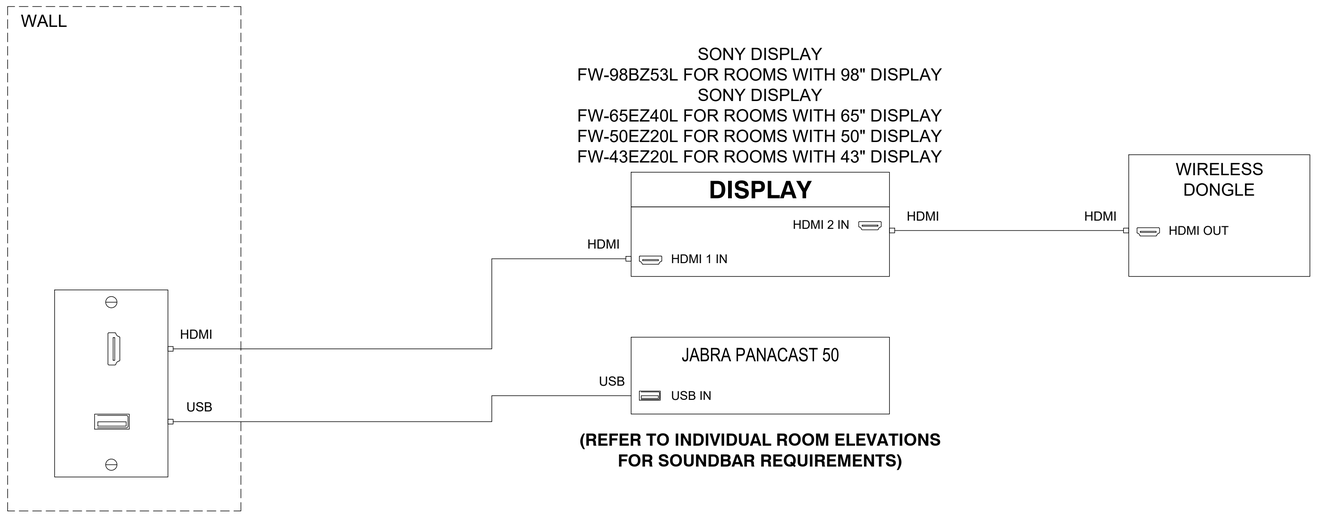


1
AV2.07

AV - TYPICAL 98", 75", 65", 50" AND 43" DISPLAY - SIGNAL FLOW DIAGRAM

SCALE: N.T.S.

# JOSLIN RECREATION CENTER - CPF RENOVATION

17 Hyatt St., Providence, RI 2909

Owner:
City of Providence, Dept. of Public Property
25 Dorrance Street
Providence, Rhode Island 02903

ROWSE Architects
400 Massasoit Avenue
Suite 300, Second Floor
East Providence, Rhode Island
p. (401) 331-9200

2 Hampshire Street
Suite 106, First Floor
Foxboro, Massachusetts
p. (774) 215-0290
rowse@rowsearchitects.com

OWNERSHIP AND USE OF DOCUMENTS, DRAWINGS AND SPECIFICATIONS AS INSTRUMENTS OF PROFESSIONAL SERVICE, ARE, AND SHALL REMAIN, THE PROPERTY OF THE ARCHITECT. THESE DOCUMENTS ARE NOT TO BE USED, IN WHOLE OR IN PART, FOR ANY OTHER PROJECTS OR PURPOSES, OR BY ANY OTHER PARTIES THAN THOSE PROPERLY AUTHORIZED BY CONTRACT WITHOUT THE EXPRESS AUTHORIZATION OF THE ARCHITECT.

## GENERAL NOTES

1. CONTRACTOR SHALL VISIT SITE, PRIOR TO BID, AND CAREFULLY INVESTIGATE AND EXAMINE THE AREA OF WORK SO AS TO SATISFY HIMSELF AS TO THE NATURE AND LOCATION OF THE WORK. CONTRACTOR TO NOTE THE CHARACTER, QUALITY, QUANTITIES OF MATERIALS REQUIRED AND DIFFICULTIES TO BE ENCOUNTERED, THE KIND AND EXTENT OF EQUIPMENT AND FACILITIES NEEDED FOR PERFORMANCE OF THE WORK AND OTHER ITEMS WHICH MAY, IN ANY WAY, AFFECT THE WORK OR CONTRACTORS PERFORMANCE.

2. DRAWINGS DO NOT INCLUDE NECESSARY COMPONENTS FOR CONSTRUCTION SAFETY.

MELISSA ANNE SIERRA
No. 11812
REGISTERED PROFESSIONAL ENGINEER
ELECTRICAL

**Date:** MAY 05, 2025
**Drawn by:** JAS **Proj. Mgr.:** MG

**Revisions**

| No. | Date | Description |
|---|---|---|
| | | |
| | | |
| | | |
| | | |
| | | |
| | | |
| | | |
| | | |

AUDIO/VISUAL DETAILS SHEET

# AV2.07

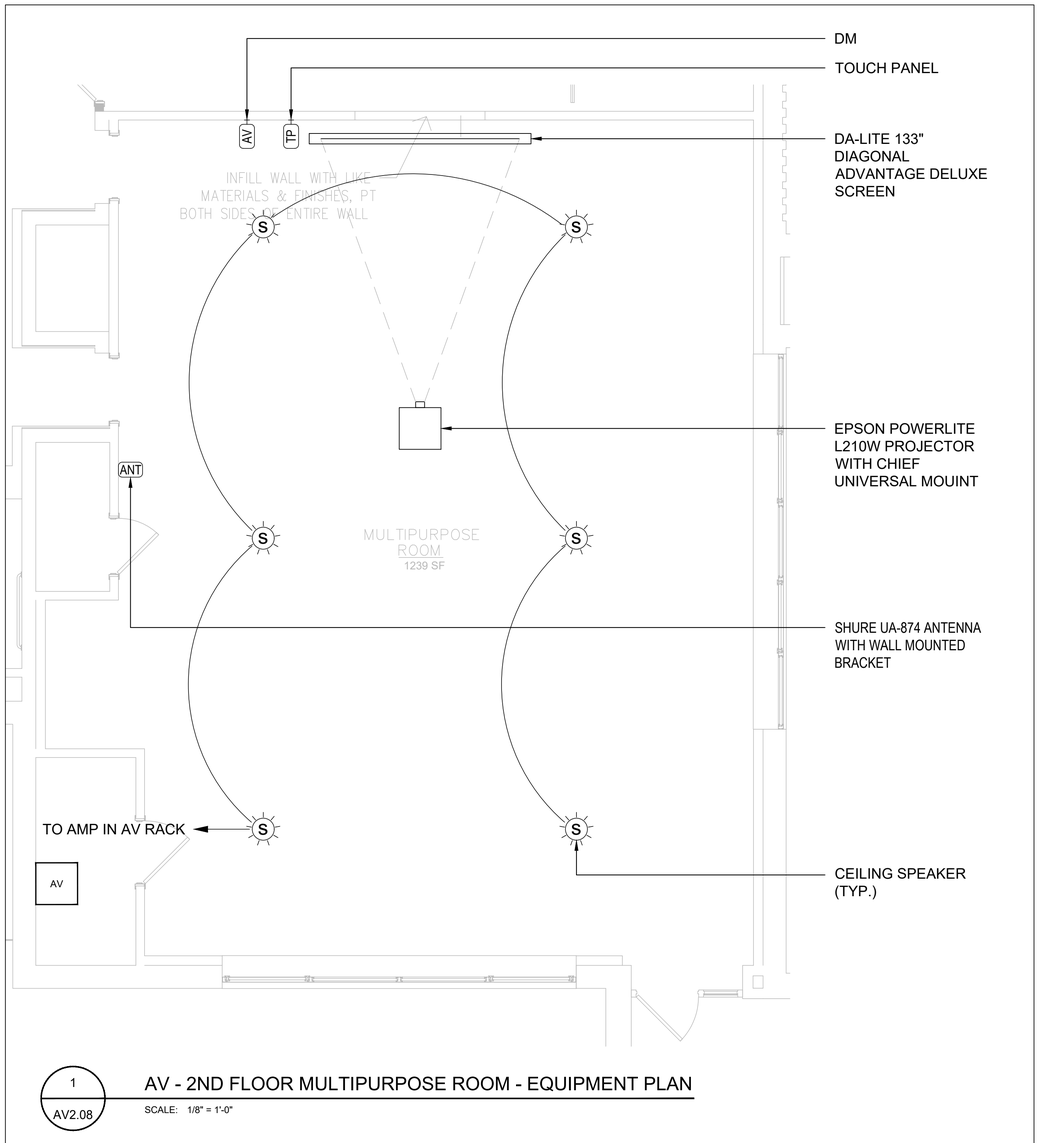


1 AV2.08

## AV - 2ND FLOOR MULTIPURPOSE ROOM - EQUIPMENT PLAN

SCALE: 1/8" = 1'-0"

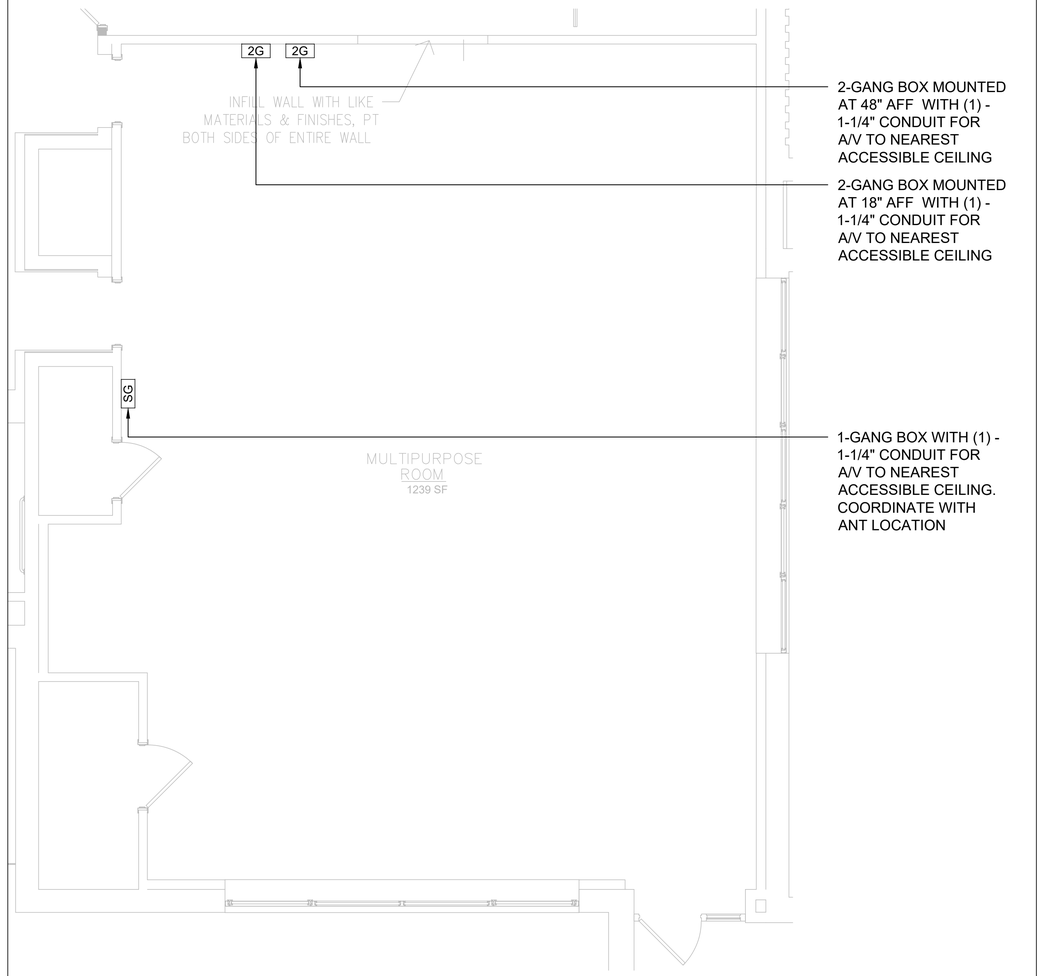


2 AV2.08

## AV - 2ND FLOOR MULTIPURPOSE ROOM - ROUGH-IN PLAN

SCALE: 1/8" = 1'-0"

# JOSLIN RECREATION CENTER - CPF RENOVATION

17 Hyatt St., Providence, RI 2909

Owner:
City of Providence, Dept. of Public Property
25 Dorrance Street
Providence, Rhode Island 02903

ROWSE Architects
400 Massasoit Avenue
Suite 300, Second Floor
East Providence, Rhode Island
p. (401) 331-9200

2 Hampshire Street
Suite 106, First Floor
Foxboro, Massachusetts
p. (774) 215-0290
rowse@rowsearchitects.com

OWNERSHIP AND USE OF DOCUMENTS, DRAWINGS AND SPECIFICATIONS AS INSTRUMENTS OF PROFESSIONAL SERVICE, ARE, AND SHALL REMAIN, THE PROPERTY OF THE ARCHITECT. THESE DOCUMENTS ARE NOT TO BE USED, IN WHOLE OR IN PART, FOR ANY OTHER PROJECTS OR PURPOSES, OR BY ANY OTHER PARTIES THAN THOSE PROPERLY AUTHORIZED BY CONTRACT WITHOUT THE EXPRESS AUTHORIZATION OF THE ARCHITECT.

## GENERAL NOTES

1. CONTRACTOR SHALL VISIT SITE, PRIOR TO BID, AND CAREFULLY INVESTIGATE AND EXAMINE THE AREA OF WORK SO AS TO SATISFY HIMSELF AS TO THE NATURE AND LOCATION OF THE WORK. CONTRACTOR TO NOTE THE CHARACTER, QUALITY, QUANTITIES OF MATERIALS REQUIRED AND DIFFICULTIES TO BE ENCOUNTERED, THE KIND AND EXTENT OF EQUIPMENT AND FACILITIES NEEDED FOR PERFORMANCE OF THE WORK AND OTHER ITEMS WHICH MAY, IN ANY WAY, AFFECT THE WORK OR CONTRACTORS PERFORMANCE.

2. DRAWINGS DO NOT INCLUDE NECESSARY COMPONENTS FOR CONSTRUCTION SAFETY.

MELISSA JANE SIERRA
No. 19812
REGISTERED PROFESSIONAL ENGINEER
ELECTRICAL

**Date:** MAY 05, 2025
**Drawn by:** JAS **Proj. Mgr.:** MG

**Revisions**

| No. | Date | Description |
|---|---|---|
| | | |
| | | |
| | | |
| | | |
| | | |
| | | |
| | | |

AUDIO/VISUAL DETAILS SHEET

# AV2.08

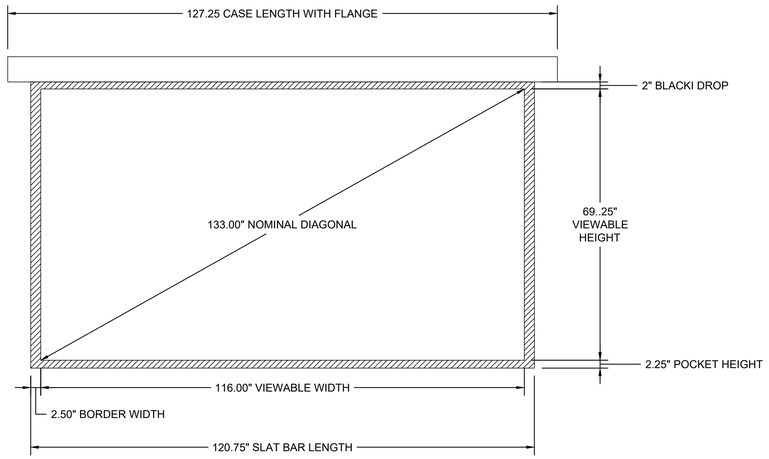


1
AV2.09

## AV - 2ND FLOOR MULTIPURPOSE ROOM - ELEVATION

SCALE: 3/4" = 1'-0"

# JOSLIN RECREATION CENTER - CPF RENOVATION

17 Hyatt St., Providence, RI 2909

Owner:
City of Providence, Dept. of Public Property
25 Dorrance Street
Providence, Rhode Island 02903


Rowse Architects

400 Massasoit Avenue
Suite 300, Second Floor
East Providence, Rhode Island
p. (401) 331-9200

2 Hampshire Street
Suite 106, First Floor
Foxboro, Massachusetts
p. (774) 215-0290

rowse@rowsearchitects.com



**OWNERSHIP AND USE OF DOCUMENTS, DRAWINGS AND SPECIFICATIONS AS INSTRUMENTS OF PROFESSIONAL SERVICE, ARE, AND SHALL REMAIN, THE PROPERTY OF THE ARCHITECT. THESE DOCUMENTS ARE NOT TO BE USED, IN WHOLE OR IN PART, FOR ANY OTHER PROJECTS OR PURPOSES, OR BY ANY OTHER PARTIES THAN THOSE PROPERLY AUTHORIZED BY CONTRACT WITHOUT THE EXPRESS AUTHORIZATION OF THE ARCHITECT.**


## GENERAL NOTES

1. CONTRACTOR SHALL VISIT SITE, PRIOR TO BID, AND CAREFULLY INVESTIGATE AND EXAMINE THE AREA OF WORK SO AS TO SATISFY HIMSELF AS TO THE NATURE AND LOCATION OF THE WORK. CONTRACTOR TO NOTE THE CHARACTER, QUALITY, QUANTITIES OF MATERIALS REQUIRED AND DIFFICULTIES TO BE ENCOUNTERED, THE KIND AND EXTENT OF EQUIPMENT AND FACILITIES NEEDED FOR PERFORMANCE OF THE WORK AND OTHER ITEMS WHICH MAY, IN ANY WAY, AFFECT THE WORK OR CONTRACTORS PERFORMANCE.

2. DRAWINGS DO NOT INCLUDE NECESSARY COMPONENTS FOR CONSTRUCTION SAFETY.

MELISSA ANNE SIERRA
No. 11812
REGISTERED PROFESSIONAL ENGINEER
ELECTRICAL

**Date:** MAY 05, 2025

**Drawn by:** JAS **Proj. Mgr.:** MG

**Revisions**

| No. | Date | Description |
|---|---|---|
| | | |
| | | |
| | | |
| | | |
| | | |
| | | |
| | | |
| | | |

AUDIO/VISUAL
DETAILS SHEET

# AV2.09

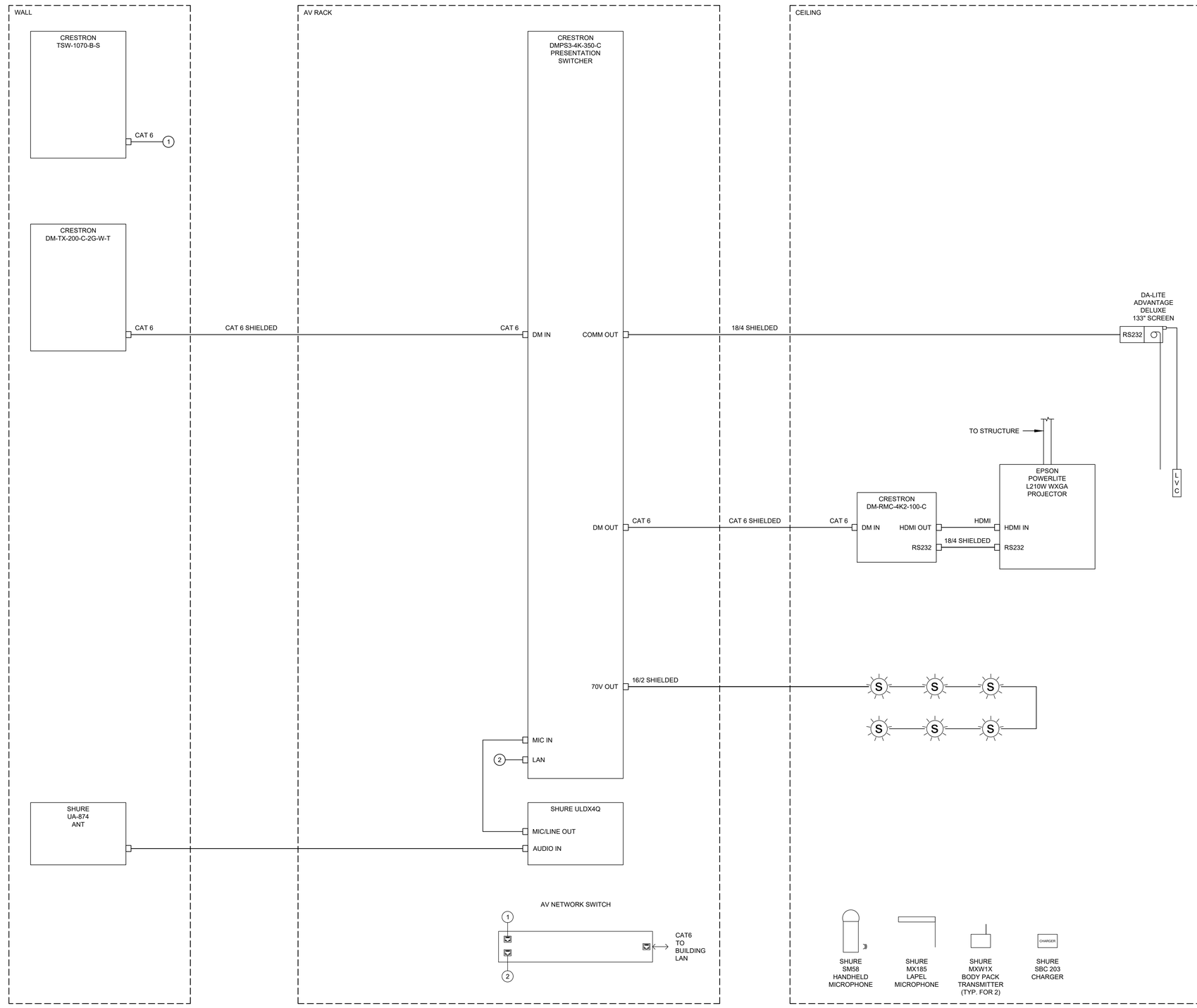


1 / AV2.10 AV - 2ND FLOOR MULTIPURPOSE ROOM - SIGNAL FLOW DIAGRAM

SCALE: NO SCALE

# JOSLIN RECREATION CENTER - CPF RENOVATION

17 Hyatt St., Providence, RI 2909

Owner:
City of Providence, Dept. of Public Property
25 Dorrance Street
Providence, Rhode Island 02903


Rowse Architects
400 Massasoit Avenue
Suite 300, Second Floor
East Providence, Rhode Island
p. (401) 331-9200

2 Hampshire Street
Suite 106, First Floor
Foxboro, Massachusetts
p. (774) 215-0290
rowse@rowsearchitects.com



**OWNERSHIP AND USE OF DOCUMENTS, DRAWINGS AND SPECIFICATIONS AS INSTRUMENTS OF PROFESSIONAL SERVICE, ARE, AND SHALL REMAIN, THE PROPERTY OF THE ARCHITECT. THESE DOCUMENTS ARE NOT TO BE USED, IN WHOLE OR IN PART, FOR ANY OTHER PROJECTS OR PURPOSES, OR BY ANY OTHER PARTIES THAN THOSE PROPERLY AUTHORIZED BY CONTRACT WITHOUT THE EXPRESS AUTHORIZATION OF THE ARCHITECT.**


## GENERAL NOTES

1. CONTRACTOR SHALL VISIT SITE, PRIOR TO BID, AND CAREFULLY INVESTIGATE AND EXAMINE THE AREA OF WORK SO AS TO SATISFY HIMSELF AS TO THE NATURE AND LOCATION OF THE WORK. CONTRACTOR TO NOTE THE CHARACTER, QUALITY, QUANTITIES OF MATERIALS REQUIRED AND DIFFICULTIES TO BE ENCOUNTERED, THE KIND AND EXTENT OF EQUIPMENT AND FACILITIES NEEDED FOR PERFORMANCE OF THE WORK AND OTHER ITEMS WHICH MAY, IN ANY WAY, AFFECT THE WORK OR CONTRACTORS PERFORMANCE.

2. DRAWINGS DO NOT INCLUDE NECESSARY COMPONENTS FOR CONSTRUCTION SAFETY.

MELISSA ANNE SERRA
No. 11812
REGISTERED PROFESSIONAL ENGINEER
ELECTRICAL

**Date:** MAY 05, 2025
**Drawn by:** JAS **Proj. Mgr.:** MG

**Revisions**

| No. | Date | Description |
|---|---|---|
| | | |
| | | |
| | | |
| | | |
| | | |
| | | |
| | | |

AUDIO/VISUAL
DETAILS SHEET

# AV2.10

# TECHNOLOGY LEGEND AND ABBREVIATIONS

## ABBREVIATIONS

| | |
|---|---|
| ℄ | CENTERLINE |
| AC | ABOVE COUNTER |
| AFF | ABOVE FINISHED FLOOR |
| ATR | ALL THREADED ROD |
| AWG | AMERICAN WIRE GAUGE |
| BFBI | BUILDER FURNISHED - BUILDER INSTALLED |
| BMS | BUILDING MANAGEMENT SYSTEM |
| C | CONDUIT |
| CCTV | CLOSED CIRCUIT TELEVISION |
| CFD | CEMENT-FIBER DUCT |
| CL | CLOSET |
| CLG | CEILING |
| COAX | COAXIAL CABLE |
| CT | CABLE TRAY |
| CTR | CENTER |
| DIA | DIAMETER |
| DGP | DATA GATHERING PANEL |
| DWG | DRAWING |
| EC | ELECTRICAL CONTRACTOR |
| ELEV | ELEVATOR |
| EMI | ELECTROMAGNETIC INTERFERENCE |
| EMT | ELECTRICAL METALLIC TUBING |
| EQPT | EQUIPMENT |
| FBO | FURNISHED BY OTHERS |
| FC | FINISHED CEILING |
| FCC | FIRE CONTROL CENTER |
| FR | FIRE RATED |
| FRP | FIBERGLASS REINFORCED PLASTIC |
| GFGI | GOVERNMENT FURNISHED - GOVERNMENT INSTALLED |
| GC | GENERAL CONTRACTOR |
| GND | GROUND |
| HVAC | HEATING VENTILATION & AIR CONDITIONING |
| IDF | INTERMEDIATE DISTRIBUTION FRAME |
| IMC | INTERMEDIATE METAL CONDUIT - SEE NEC ARTICLE 342 |
| JB | JUNCTION BOX |
| LAN | LOCAL AREA NETWORK |
| LEC | LOCAL EXCHANGE CARRIER |
| MDF | MAIN DISTRIBUTION FRAME |
| MM | MULTI-MODE (OPTICAL FIBER) |
| MTD | MOUNTED |
| MTG | MOUNTING |
| NEC | NATIONAL ELECTRICAL CODE - NFPA 70 |
| NESC | NATIONAL ELECTRICAL SAFETY CODE |
| NIC | NOT IN CONTRACT |
| NTS | NOT TO SCALE |
| OSP | OUTSIDE PANT |
| PNL | PANEL |
| PR | PAIRS-NUMBER OF PAIRS IN COPPER CABLE |
| PVC | POLYVINYL CHLORIDE |
| RM | ROOM |
| RMC | RIGID METAL CONDUIT - SEE NEC ARTICLE 344 |
| RU | RACK UNIT; UNIT OF PATCH PANEL HEIGHT EQUAL TO 1.75 INCH |
| SCC | SECURITY CONTROL CENTER |
| SDF | SECURITY DISTRIBUTION FRAME |
| SM | SINGLE-MODE (OPTICAL FIBER) |
| STP | SHIELDED TWISTED PAIR |
| TBD | TO BE DETERMINED |
| TC | TELECOMMUNICATIONS CONTRACTOR |
| TEL | TELECOMMUNICATION |
| TYP | TYPICAL |
| UON | UNLESS OTHERWISE NOTED |
| UTP | UNSHIELDED TWISTED PAIR |
| WP | WEATHERPROOF |

## TELECOM. NOTES

1. THE LOCATIONS AND ELEVATIONS OF TECHNOLOGY DEVICES SHOWN ON THESE DRAWINGS ARE SCHEMATIC UNLESS ACTUAL DIMENSIONS ARE SHOWN ON THE DRAWINGS. REFER TO THE ARCHITECTURAL PLANS AND OBTAIN THE APPROVAL OF THE ARCHITECT FOR THE ACTUAL LOCATIONS AND ELEVATIONS OF ALL DEVICES.
2. CONTRACTOR SHALL ENSURE THAT ALL MOUNTING HEIGHTS COMPLY WITH CURRENT ADA REQUIREMENTS.
3. ABOVE COUNTER DEVICES SHALL BE MOUNTED 8" ABOVE COUNTER OR A MAXIMUM OF 44" AFF (TO TOP OF DEVICE).
4. PROVIDE SUPPORTS AND ANCHORING FOR PIPING, CONDUIT, DUCTS, EQUIPMENT, AND OTHER NON-STRUCTURAL ELEMENTS. SEE SPECIFICATIONS FOR ADDITIONAL REQUIREMENTS.
5. PROVIDE SOUND PUTTY PADS IN ALL BACK BOXES.
6. FIRESTOPPING: ALL PENETRATIONS THROUGH RATED WALLS AND FLOORS AND CONDUIT/SLEEVE OPENINGS SHALL BE SEALED WITH MATERIAL CAPABLE OF PREVENTING THE PASSAGE OF FLAMES, HOT GASSES AND SMOKE WHEN SUBJECTED TO THE REQUIREMENTS OF THE TEST STANDARD SPECIFIC FOR APPLICABLE CODES.
7. ALL COMMUNICATIONS CONDUIT, CABLE TRAYS, LADDER RACKS AND EQUIPMENT RACKS SHALL BE BONDED TO BUILDING GROUND SYSTEM PER NEC 250 AND ANSI/TIA-607-E.
8. LABEL ALL CLOSETS, RACKS, FRAMES, CABINETS, TERMINATION BLOCKS, CABLES, TERMINATIONS, RACEWAYS, ETC. IN ACCORDANCE WITH ANSI/TIA-606-C.
9. ALL COMMUNICATIONS RACEWAYS AND PATHWAYS SHALL BE INSTALLED TO MINIMIZE UNNECESSARY CABLE LENGTHS AND MAINTAIN INDUSTRY STANDARD LENGTH LIMITATIONS FOR HORIZONTAL CABLE DISTRIBUTION (E.G CAT.6). BASIC LINK CABLE LENGTH SHALL NOT EXCEED 295 FT (90M) FOR UTP CABLE, 150 FT (45M) FOR SERIES-6 COAXIAL CABLE.
10. ALL COMMUNICATIONS CABLE SHALL BE PLENUM RATED (CMP), RISER RATED (CMR) AND UNDERGROUND RATED (WATERBLOCK) ACCORDING TO USE AND ENVIRONMENTAL CONDITIONS.
11. PROVIDE PROTECTIVE BUSHINGS ON ALL COMMUNICATIONS CONDUITS AND WHERE CABLING ROUTES THROUGH METAL STUDS.
12. ALL NON-ARMORED FIBER OPTIC CABLE SHALL BE INSTALLED IN APPROVED INNERDUCT.
13. ALWAYS INSTALL LOW-VOLTAGE CABLES IN CONDUITS, CABLE TRAYS, WIREWAYS OR OTHER APPROVED CABLE MANAGEMENT DEVICES OR SYSTEMS. NEVER INSTALL CABLES IN SUCH A MANNER THAT THEY ARE SUPPORTED BY CEILING SYSTEMS (CEILING TILE OR GRID, GYPSUM BOARD, LATH & PLASTER), HVAC DUCTS OR PIPES, LIGHTING FIXTURES, ELECTRICAL CONDUITS OR CABLES, PLUMBING/FIRE PROTECTION PIPES, OR ANY OTHER DEVICES NOT INTENDED FOR THE SUPPORT OF LOW-VOLTAGE CABLING.
14. EXPOSED LOW-VOLTAGE CABLES SHALL NOT BE PAINTED. ANY PAINTED CABLES SHALL BE REMOVED AND REPLACED WITH NEW CABLES.
15. PROVIDE WEATHERPROOF, IN-USE COVER FOR EXTERIOR DATA DEVICES.
16. ALL CABLE TRAY MOUNTING HEIGHTS INDICATED ON FLOOR PLANS ARE TO THE BOTTOM OF CABLE TRAY SUPPORTS.
17. SEISMIC BRACING FOR ALL CABLE TRAYS SHALL BE PROVIDED AS REQUIRED BY CODE, LOCAL GOVERNING JURISDICTION AND CABLE TRAY MANUFACTURER SPECIFICATIONS.
18. ALL CABLE TRAY ROUTING THROUGH ELECTRICAL ROOMS SHALL BE FULLY ENCLOSED. REFER TO CABLE TRAY DETAILS AND SPECIFICATIONS FOR ADDITIONAL REQUIREMENTS.
19. CABLE TRAY AND CABLE ROUTING ARE INTENDED TO SUPPORT ALL TYPES OF TELECOMMUNICATIONS CABLING AS DEFINED IN TIA-569-D.
20. RACEWAYS AND CABLE SHALL BE RUN CONCEALED IN FINISHED SPACES UNLESS OTHERWISE INDICATED.
21. REUSABLE VELCRO TIES SHALL BE USED TO BUNDLE OR MANAGE CABLES. PLASTIC ZIP TIES ARE NOT APPROVED FOR USE.
22. SIZE AND ORIENTATION OF ALL TELECOM PULL-BOXES SHALL MEET OR EXCEED THE BICSI TDMM REQUIREMENTS.
23. ALL LOW-VOLTAGE CONDUIT LARGER THAN 2" SHALL HAVE A MINIMUM BEND RADIUS OF 10:1 OF THE INSIDE DIAMETER FOR ALL ELBOWS. ALL LOW-VOLTAGE CONDUIT 2" AND SMALLER SHALL HAVE A MINIMUM BEND RADIUS OF 6:1 OF THE INSIDE DIAMETER FOR ALL ELBOWS.
24. ALL CONDUITS AND MICRODUCTS SHALL BE INSTALLED WITH PULL-STRINGS.

## SYMBOLS LEGEND

| RACEWAY LEGEND | |
|---|---|
| T ——— T ——— | TELECOMMUNICATIONS CONDUIT |
| UT——— UT——— | CONDUITS BELOW GRADE/SLAB OR EMBEDDED IN SLAB |
| J ——— J ——— | CABLES ON J-HOOKS |
| ○——— | CONDUIT UP |
| ●——— | CONDUIT DOWN |
| ⊢——— | CONDUIT STUBBED OUT WITH BUSHING |
| ◕ | CONDUIT CROSS-SECTION |
| ——— CT ——— | TELECOMMUNICATIONS CABLE TRAY |
| ▯▯▯▯▯▯▯▯▯▯▯▯▯▯▯▯ | TELECOMMUNICATIONS CABLE TRAY |

## MISCELLANEOUS SYMBOL LEGEND

| | |
|---|---|
| ◇ # | SHEET KEYNOTE |
| △ # | REVISION NUMBER |
| 1 / T2.1 ▭ | CALLOUT — CALLOUT NUMBER; SHEET NUMBER |
| TMGB | TELECOM MAIN GROUNDING BUSBAR |
| TGB | TELECOM GROUNDING BUSBAR |

## LOW VOLTAGE WIRING DEVICE LEGEND

| | |
|---|---|
| WAP ▽ | WIRELESS ACCESS POINT<br>(2) -CAT 6A CABLES |
| 1 ▽ | WALL MOUNTED DATA 1 LOCATION<br>(1) - CAT 6A CABLE |
| 2 ▽ | WALL MOUNTED DATA 2 LOCATION<br>(2) - CAT 6A CABLES |
| 3 ▽ | WALL MOUNTED DATA 3 LOCATION<br>(3) - CAT 6A CABLES |
| 4 ▽ | WALL MOUNTED DATA 4 LOCATION<br>(4) - CAT 6A CABLES |
| TV ▽ | WALL MOUNTED DATA 2 LOCATION - COORDINATE WITH DISPLAY<br>(2) - CAT 6A CABLES<br>(1) - HDMI CABLE |
| 4 ▽ | FLOOR MOUNTED DATA 4 LOCATION<br>(4) - CAT 6A CABLES |
| CAM ▽ | WALL MOUNTED DATA 1 LOCATION - FOR SECURITY CAMERA<br>(1) - CAT 6A CABLE |
| CAM ▽ | CEILING MOUNTED DATA 1 LOCATION - FOR SECURITY CAMERA<br>(1) - CAT 6A CABLE |

NOTES:

1. FOR TELECOMMUNICATIONS OUTLETS, PROVIDE BOX WITH CONDUIT FROM BOX TO 3" ABOVE AN ACCESSIBLE CEILING OR INTO THE TELECOM ROOM. INCLUDE PULL STRING AND TERMINATED WITH AN INSULATED BUSHING. BOXES SHALL BE RECESSED. 1"C., 4 11/16" x 2 1/8" BOX WITH 5/8" RAISED SINGLE GANG PLASTER RING. RACO #259 & 843 OR EQUAL.
2. FOR TELEPHONE OUTLET, PROVIDE SINGLE GANG BOX AND PLASTER RING BOX WITH 3/4" CONDUIT TERMINATED WITH AN INSULATING BUSHING TO 3" ABOVE AN ACCESSIBLE CEILING OR INTO THE TELECOM ROOM WITH A PULL STRING.
3. ALL CONDUITS, BACK BOXES AND PLASTER RINGS WILL BE PROVIDED BY THE ELECTRICAL CONTRACTOR. TELECOMMUNICATIONS CONTRACTOR SHALL COORDINATE AND VERIFY THE OUTLET LOCATIONS BY REFERRING TO THE ARCHITECTURAL DRAWINGS AND DETAILS.
4. REFER TO ARCHITECTURAL DRAWINGS FOR EXACT LOCATIONS AND MOUNTING HEIGHTS OF ALL OUTLETS.
5. TELECOM CONTRACTOR SHALL RUN DATA CABLING FOR ALL SECURITY CAMERAS AND VIDEO INTERCOMS. CONTRACTOR TO REFER TO SECURITY DRAWINGS FOR ADDITIONAL INFORMATION.

## LEGEND NOTES

THIS SHEET IS A GENERAL LIST OF SYMBOLS AND ABBREVIATIONS AND SHALL BE USED AS A DICTIONARY TO DEFINE ITEMS INDICATED ON DRAWINGS. NOT ALL SYMBOLS OR ABBREVIATIONS ARE NECESSARILY USED ON THIS PROJECT.

## DRAWING LIST


| | |
|---|---|
| TC0.01 | TELECOM - LEGEND AND NOTES SHEET |
| TC1.00 | TELECOM - FIRST FLOOR PLAN |
| TC1.01 | TELECOM - BASEMENT AND SECOND FLOOR PLAN |
| TC2.00 | TELECOM - DETAILS SHEET |
| TC2.01 | TELECOM - PART PLANS |
| TC2.02 | TELECOM - DETAILS SHEET |


# JOSLIN RECREATION CENTER - CPF RENOVATION

17 Hyatt St., Providence, RI 2909

Owner:
City of Providence, Dept. of Public Property
25 Dorrance Street
Providence, Rhode Island 02903


ROWSE Architects
400 Massasoit Avenue
Suite 300, Second Floor
East Providence, Rhode Island
p. (401) 331-9200

2 Hampshire Street
Suite 106, First Floor
Foxboro, Massachusetts
p. (774) 215-0290
rowse@rowsearchitects.com



OWNERSHIP AND USE OF DOCUMENTS, DRAWINGS AND SPECIFICATIONS AS INSTRUMENTS OF PROFESSIONAL SERVICE, ARE, AND SHALL REMAIN, THE PROPERTY OF THE ARCHITECT. THESE DOCUMENTS ARE NOT TO BE USED, IN WHOLE OR IN PART, FOR ANY OTHER PROJECTS OR PURPOSES, OR BY ANY OTHER PARTIES THAN THOSE PROPERLY AUTHORIZED BY CONTRACT WITHOUT THE EXPRESS AUTHORIZATION OF THE ARCHITECT.


## GENERAL NOTES

1. CONTRACTOR SHALL VISIT SITE, PRIOR TO BID, AND CAREFULLY INVESTIGATE AND EXAMINE THE AREA OF WORK SO AS TO SATISFY HIMSELF AS TO THE NATURE AND LOCATION OF THE WORK, CONTRACTOR TO NOTE THE CHARACTER, QUALITY, QUANTITIES OF MATERIALS REQUIRED AND DIFFICULTIES TO BE ENCOUNTERED, THE KIND AND EXTENT OF EQUIPMENT AND FACILITIES NEEDED FOR PERFORMANCE OF THE WORK AND OTHER ITEMS WHICH MAY, IN ANY WAY, AFFECT THE WORK OR CONTRACTORS PERFORMANCE.
2. DRAWINGS DO NOT INCLUDE NECESSARY COMPONENTS FOR CONSTRUCTION SAFETY.

MELISSA ANNE SIERRA
No. 11612
REGISTERED PROFESSIONAL ENGINEER
ELECTRICAL

**Date:** MAY 05, 2025
**Drawn by:** JAS **Proj. Mgr.:** MG

**Revisions**

| No. | Date | Description |
|---|---|---|
| | | |
| | | |
| | | |
| | | |
| | | |
| | | |
| | | |
| | | |

TELECOM
LEGEND AND NOTES SHEET

# TC0.01

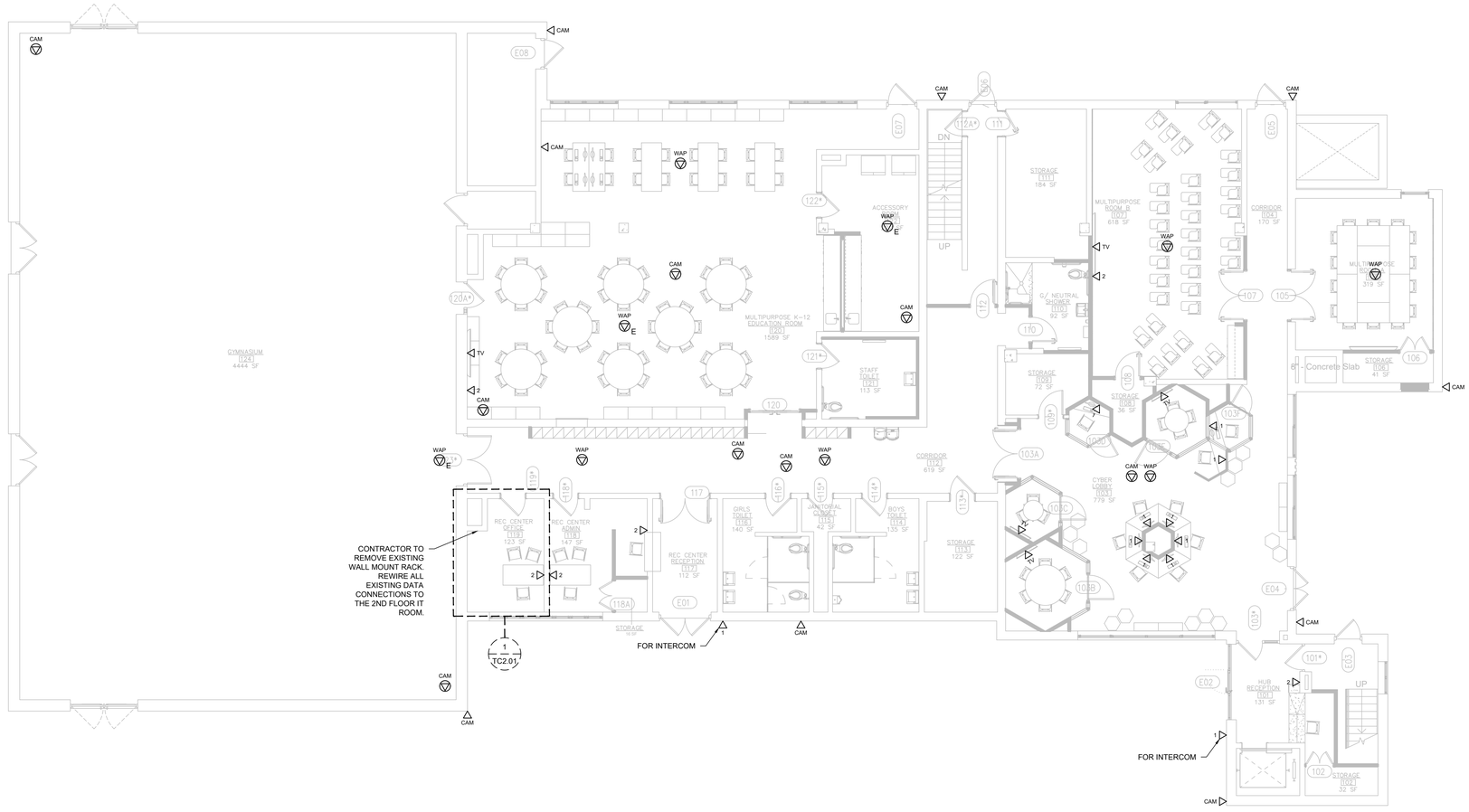


1 TELECOM - FIRST FLOOR PLAN

TC1.00

SCALE: 1/8" = 1'-0"

# JOSLIN RECREATION CENTER - CPF RENOVATION

17 Hyatt St., Providence, RI 2909

Owner:
City of Providence, Dept. of Public Property
25 Dorrance Street
Providence, Rhode Island 02903


ROWSE Architects

400 Massasoit Avenue
Suite 300, Second Floor
East Providence, Rhode Island
p. (401) 331-9200

2 Hampshire Street
Suite 106, First Floor
Foxboro, Massachusetts
p. (774) 215-0290

rowse@rowsearchitects.com



**OWNERSHIP AND USE OF DOCUMENTS, DRAWINGS AND SPECIFICATIONS AS INSTRUMENTS OF PROFESSIONAL SERVICE, ARE, AND SHALL REMAIN, THE PROPERTY OF THE ARCHITECT. THESE DOCUMENTS ARE NOT TO BE USED, IN WHOLE OR IN PART, FOR ANY OTHER PROJECTS OR PURPOSES, OR BY ANY OTHER PARTIES THAN THOSE PROPERLY AUTHORIZED BY CONTRACT WITHOUT THE EXPRESS AUTHORIZATION OF THE ARCHITECT.**


## GENERAL NOTES

1. CONTRACTOR SHALL VISIT SITE, PRIOR TO BID, AND CAREFULLY INVESTIGATE AND EXAMINE THE AREA OF WORK SO AS TO SATISFY HIMSELF AS TO THE NATURE AND LOCATION OF THE WORK. CONTRACTOR TO NOTE THE CHARACTER, QUALITY, QUANTITIES OF MATERIALS REQUIRED AND DIFFICULTIES TO BE ENCOUNTERED, THE KIND AND EXTENT OF EQUIPMENT AND FACILITIES NEEDED FOR PERFORMANCE OF THE WORK AND OTHER ITEMS WHICH MAY, IN ANY WAY, AFFECT THE WORK OR CONTRACTORS PERFORMANCE.

2. DRAWINGS DO NOT INCLUDE NECESSARY COMPONENTS FOR CONSTRUCTION SAFETY.

MELISSA ANNE SIENKA
No. 11812
REGISTERED PROFESSIONAL ENGINEER
ELECTRICAL

**Date:** MAY 05, 2025

**Drawn by:** JAS **Proj. Mgr.:** MG

**Revisions**

| No. | Date | Description |
|---|---|---|
| | | |
| | | |
| | | |
| | | |
| | | |
| | | |
| | | |
| | | |

TELECOM
FIRST FLOOR PLAN

# TC1.00

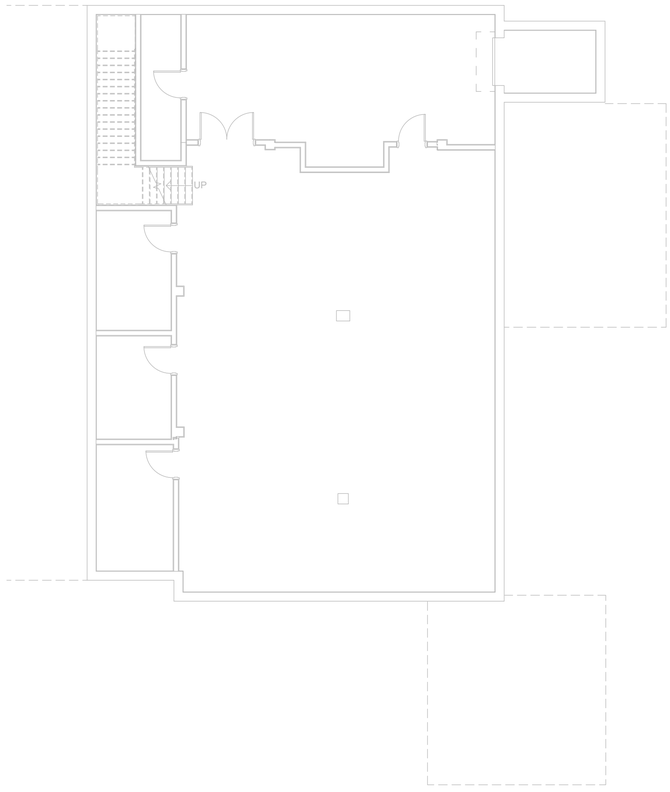


1 TC1.01

## TELECOM - BASEMENT FLOOR PLAN

SCALE: 1/8" = 1'-0"

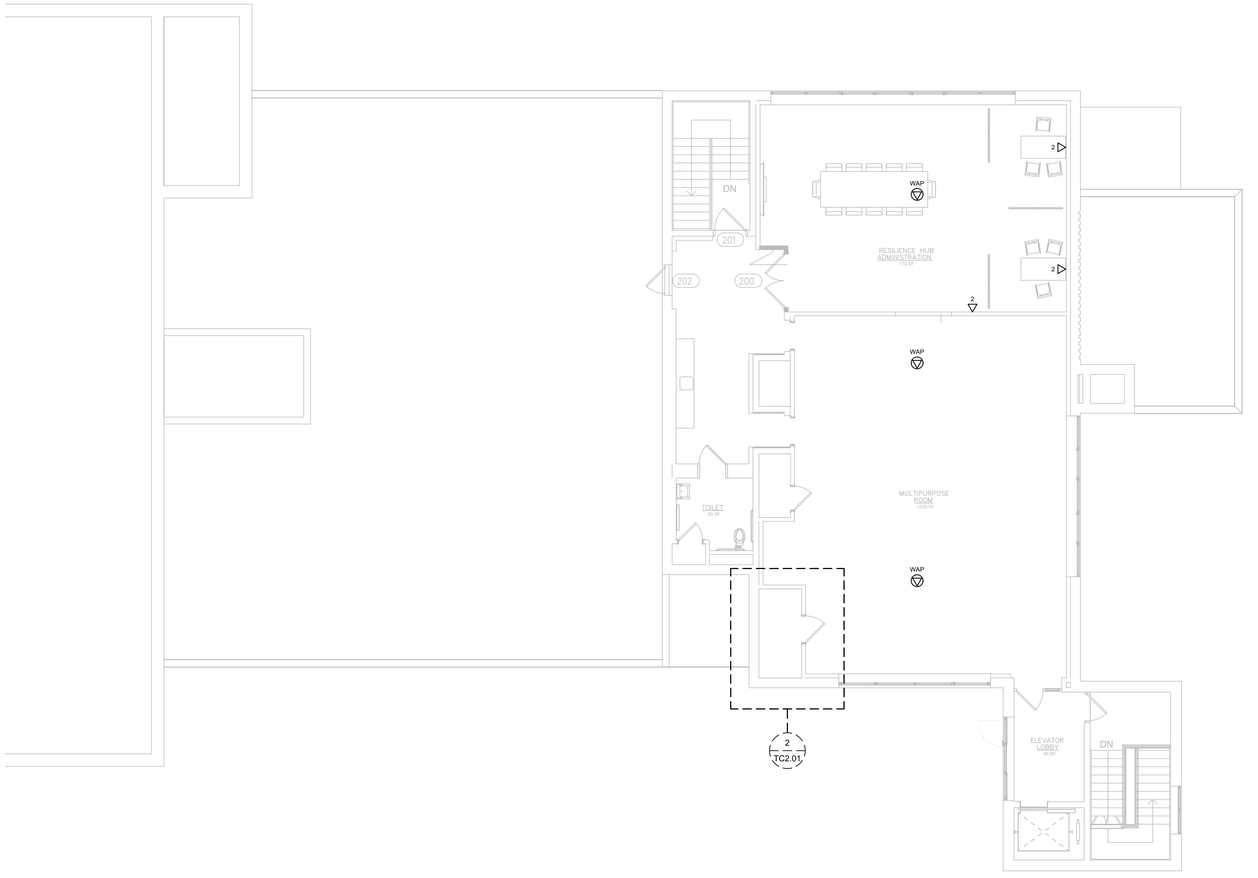


2 TC1.01

## TELECOM - SECOND FLOOR PLAN

SCALE: 1/8" = 1'-0"

# JOSLIN RECREATION CENTER - CPF RENOVATION

17 Hyatt St., Providence, RI 2909

Owner:
City of Providence, Dept. of Public Property
25 Dorrance Street
Providence, Rhode Island 02903

ROWSE Architects
400 Massasoit Avenue
Suite 300, Second Floor
East Providence, Rhode Island
p. (401) 331-9200

2 Hampshire Street
Suite 106, First Floor
Foxboro, Massachusetts
p. (774) 215-0290
rowse@rowsearchitects.com

**OWNERSHIP AND USE OF DOCUMENTS, DRAWINGS AND SPECIFICATIONS AS INSTRUMENTS OF PROFESSIONAL SERVICE, ARE, AND SHALL REMAIN, THE PROPERTY OF THE ARCHITECT. THESE DOCUMENTS ARE NOT TO BE USED, IN WHOLE OR IN PART, FOR ANY OTHER PROJECTS OR PURPOSES, OR BY ANY OTHER PARTIES THAN THOSE PROPERLY AUTHORIZED BY CONTRACT WITHOUT THE EXPRESS AUTHORIZATION OF THE ARCHITECT.**

## GENERAL NOTES

1. CONTRACTOR SHALL VISIT SITE, PRIOR TO BID, AND CAREFULLY INVESTIGATE AND EXAMINE THE AREA OF WORK SO AS TO SATISFY HIMSELF AS TO THE NATURE AND LOCATION OF THE WORK. CONTRACTOR TO NOTE THE CHARACTER, QUALITY, QUANTITIES OF MATERIALS REQUIRED AND DIFFICULTIES TO BE ENCOUNTERED, THE KIND AND EXTENT OF EQUIPMENT AND FACILITIES NEEDED FOR PERFORMANCE OF THE WORK AND OTHER ITEMS WHICH MAY, IN ANY WAY, AFFECT THE WORK OR CONTRACTORS PERFORMANCE.

2. DRAWINGS DO NOT INCLUDE NECESSARY COMPONENTS FOR CONSTRUCTION SAFETY.

MELISSA ANNE SERRA
No. 11812
REGISTERED PROFESSIONAL ENGINEER
ELECTRICAL

**Date:** MAY 05, 2025
**Drawn by:** JAS **Proj. Mgr.:** MG
**Revisions**

| No. | Date | Description |
|---|---|---|
| | | |
| | | |
| | | |
| | | |
| | | |
| | | |
| | | |
| | | |

TELECOM
BASEMENT AND SECOND
FLOOR PLANS

# TC1.01

TELECOM CABLING RISER




1 / TC2.0 TELECOM CABLING RISER DIAGRAM

SCALE: N.T.S.

TELECOM CONDUIT RISER




2 / TC2.0 TELECOM CONUIT/SLEEVE RISER DIAGRAM

SCALE: N.T.S.

# JOSLIN RECREATION CENTER - CPF RENOVATION

17 Hyatt St., Providence, RI 2909

Owner:
City of Providence, Dept. of Public Property
25 Dorrance Street
Providence, Rhode Island 02903


Rowse Architects
400 Massasoit Avenue
Suite 300, Second Floor
East Providence, Rhode Island
p. (401) 331-9200

2 Hampshire Street
Suite 106, First Floor
Foxboro, Massachusetts
p. (774) 215-0290
rowse@rowsearchitects.com



**OWNERSHIP AND USE OF DOCUMENTS, DRAWINGS AND SPECIFICATIONS AS INSTRUMENTS OF PROFESSIONAL SERVICE, ARE, AND SHALL REMAIN, THE PROPERTY OF THE ARCHITECT. THESE DOCUMENTS ARE NOT TO BE USED, IN WHOLE OR IN PART, FOR ANY OTHER PROJECTS OR PURPOSES, OR BY ANY OTHER PARTIES THAN THOSE PROPERLY AUTHORIZED BY CONTRACT WITHOUT THE EXPRESS AUTHORIZATION OF THE ARCHITECT.**


## GENERAL NOTES

1. CONTRACTOR SHALL VISIT SITE, PRIOR TO BID, AND CAREFULLY INVESTIGATE AND EXAMINE THE AREA OF WORK SO AS TO SATISFY HIMSELF AS TO THE NATURE AND LOCATION OF THE WORK. CONTRACTOR TO NOTE THE CHARACTER, QUALITY, QUANTITIES OF MATERIALS REQUIRED AND DIFFICULTIES TO BE ENCOUNTERED, THE KIND AND EXTENT OF EQUIPMENT AND FACILITIES NEEDED FOR PERFORMANCE OF THE WORK AND OTHER ITEMS WHICH MAY, IN ANY WAY, AFFECT THE WORK OR CONTRACTORS PERFORMANCE.

2. DRAWINGS DO NOT INCLUDE NECESSARY COMPONENTS FOR CONSTRUCTION SAFETY.

MELISSA ANNE SIERRA
No. 11812
REGISTERED PROFESSIONAL ENGINEER
ELECTRICAL

**Date:** MAY 05, 2025
**Drawn by:** JAS **Proj. Mgr.:** MG
**Revisions**

| No. | Date | Description |
|---|---|---|
| | | |
| | | |
| | | |
| | | |
| | | |
| | | |
| | | |

TELECOM
DETAILS SHEET

# TC2.00

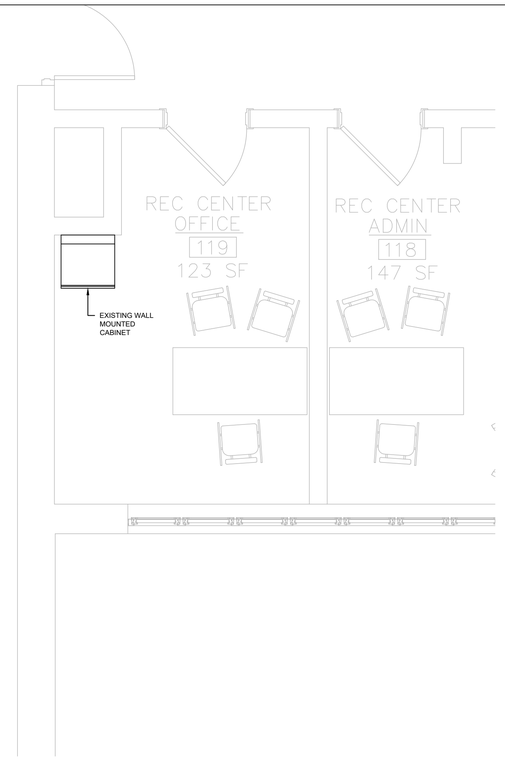


1 TC2.01 REC CENTER OFFICE 122 - EXISITNG IDF ROOM

SCALE: 3/8" = 1'-0"

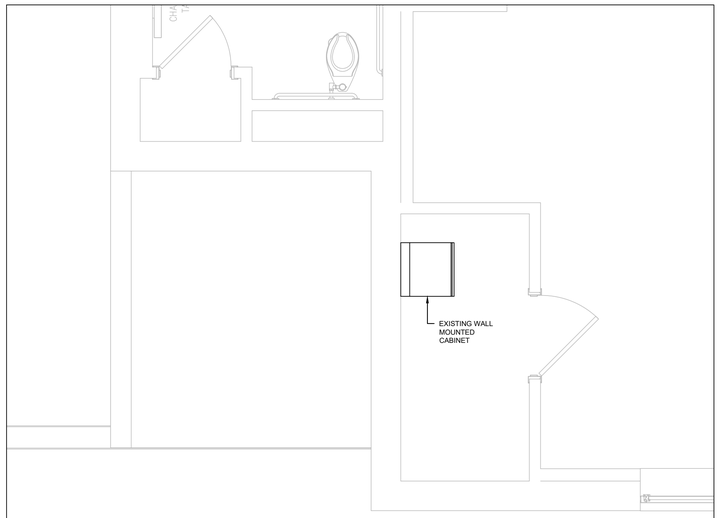


2 TC2.01 MULTI-PURPOSE - EXISITNG MDF ROOM

SCALE: 3/8" = 1'-0"

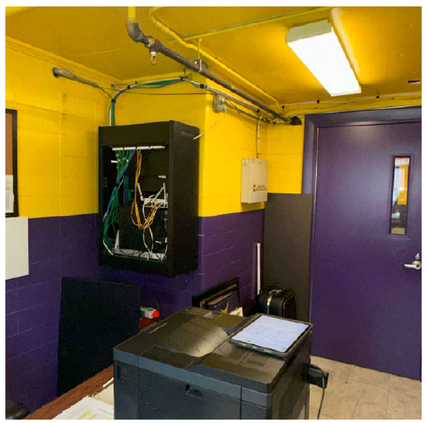

3 TC2.01 REC CENTER OFFICE 122 - EXISITNG IDF ROOM

SCALE: N.T.S.



4 TC2.01 MULTI-PURPOSE - EXISITNG MDF ROOM

SCALE: N.T.S.

# JOSLIN RECREATION CENTER - CPF RENOVATION

17 Hyatt St., Providence, RI 2909

Owner:
City of Providence, Dept. of Public Property
25 Dorrance Street
Providence, Rhode Island 02903

Rowse Architects
400 Massasoit Avenue
Suite 300, Second Floor
East Providence, Rhode Island
p. (401) 331-9200

2 Hampshire Street
Suite 106, First Floor
Foxboro, Massachusetts
p. (774) 215-0290
rowse@rowsearchitects.com

**OWNERSHIP AND USE OF DOCUMENTS, DRAWINGS AND SPECIFICATIONS AS INSTRUMENTS OF PROFESSIONAL SERVICE, ARE, AND SHALL REMAIN, THE PROPERTY OF THE ARCHITECT. THESE DOCUMENTS ARE NOT TO BE USED, IN WHOLE OR IN PART, FOR ANY OTHER PROJECTS OR PURPOSES, OR BY ANY OTHER PARTIES THAN THOSE PROPERLY AUTHORIZED BY CONTRACT WITHOUT THE EXPRESS AUTHORIZATION OF THE ARCHITECT.**

## GENERAL NOTES

1. CONTRACTOR SHALL VISIT SITE, PRIOR TO BID, AND CAREFULLY INVESTIGATE AND EXAMINE THE AREA OF WORK SO AS TO SATISFY HIMSELF AS TO THE NATURE AND LOCATION OF THE WORK. CONTRACTOR TO NOTE THE CHARACTER, QUALITY, QUANTITIES OF MATERIALS REQUIRED AND DIFFICULTIES TO BE ENCOUNTERED, THE KIND AND EXTENT OF EQUIPMENT AND FACILITIES NEEDED FOR PERFORMANCE OF THE WORK AND OTHER ITEMS WHICH MAY, IN ANY WAY, AFFECT THE WORK OR CONTRACTORS PERFORMANCE.

2. DRAWINGS DO NOT INCLUDE NECESSARY COMPONENTS FOR CONSTRUCTION SAFETY.

MELISSA ANNE SIENKA
No. 11812
REGISTERED PROFESSIONAL ENGINEER
ELECTRICAL

**Date:** MAY 05, 2025

**Drawn by:** JAS **Proj. Mgr.:** MG

**Revisions**

| No. | Date | Description |
|---|---|---|
| | | |
| | | |
| | | |
| | | |
| | | |
| | | |
| | | |
| | | |

TELECOM
PART PLANS

# TC2.01

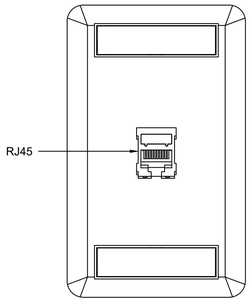


1 TYPICAL OUTLET "2" DETAIL — NO SCALE

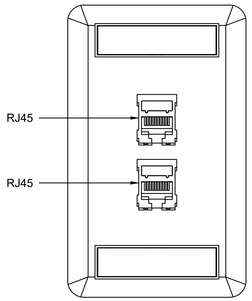


2 TYPICAL OUTLET "2" DETAIL — NO SCALE

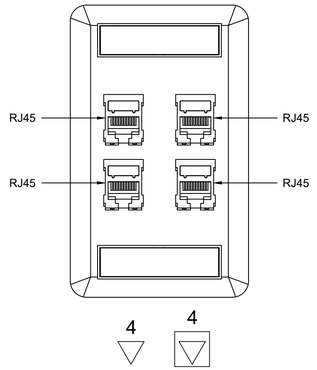


3 TYPICAL OUTLET "4" DETAIL — NO SCALE

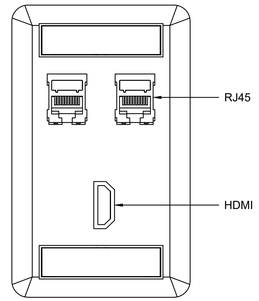


4 TYPICAL OUTLET "TV" DETAIL — NO SCALE

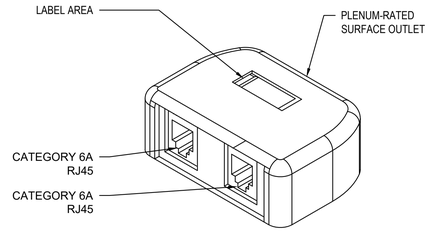


WAP

5 TYPICAL OUTLET "WAP" DETAIL — NO SCALE

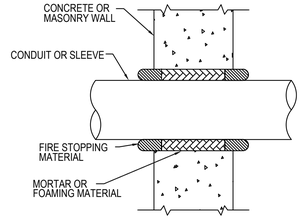


NOTES:
1. INSTALL FIRE STOPPING MATERIAL IN ACCORDANCE WITH UL 1479 STANDARDS AND MANUFACTURER TESTED METHODS.
2. INSTALL FIRE STOPPING MATERIAL INSIDE SLEEVES AFTER CABLE INSTALLATION IS COMPLETE.
3. ALWAYS RESTORE THE FIRE-RATING OF THE WALL TO IT'S INTENDED DESIGN.

6 FIRESTOPPING DETAIL — NO SCALE

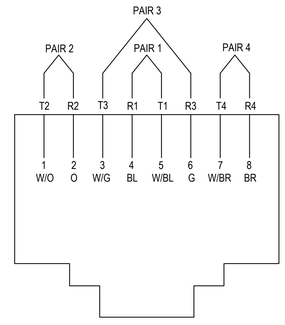


7 568B WIRING SCHEME — NO SCALE

# JOSLIN RECREATION CENTER - CPF RENOVATION

17 Hyatt St., Providence, RI 2909

Owner:
City of Providence, Dept. of Public Property
25 Dorrance Street
Providence, Rhode Island 02903


Rowse Architects
400 Massasoit Avenue
Suite 300, Second Floor
East Providence, Rhode Island
p. (401) 331-9200

2 Hampshire Street
Suite 106, First Floor
Foxboro, Massachusetts
p. (774) 215-0290
rowse@rowsearchitects.com



**OWNERSHIP AND USE OF DOCUMENTS, DRAWINGS AND SPECIFICATIONS AS INSTRUMENTS OF PROFESSIONAL SERVICE, ARE, AND SHALL REMAIN, THE PROPERTY OF THE ARCHITECT. THESE DOCUMENTS ARE NOT TO BE USED, IN WHOLE OR IN PART, FOR ANY OTHER PROJECTS OR PURPOSES, OR BY ANY OTHER PARTIES THAN THOSE PROPERLY AUTHORIZED BY CONTRACT WITHOUT THE EXPRESS AUTHORIZATION OF THE ARCHITECT.**


## GENERAL NOTES

1. CONTRACTOR SHALL VISIT SITE, PRIOR TO BID, AND CAREFULLY INVESTIGATE AND EXAMINE THE AREA OF WORK SO AS TO SATISFY HIMSELF AS TO THE NATURE AND LOCATION OF THE WORK. CONTRACTOR TO NOTE THE CHARACTER, QUALITY, QUANTITIES OF MATERIALS REQUIRED AND DIFFICULTIES TO BE ENCOUNTERED, THE KIND AND EXTENT OF EQUIPMENT AND FACILITIES NEEDED FOR PERFORMANCE OF THE WORK AND OTHER ITEMS WHICH MAY, IN ANY WAY, AFFECT THE WORK OR CONTRACTORS PERFORMANCE.

2. DRAWINGS DO NOT INCLUDE NECESSARY COMPONENTS FOR CONSTRUCTION SAFETY.

MELISSA ANNE SIERRA
No. 11812
REGISTERED PROFESSIONAL ENGINEER
ELECTRICAL

**Date:** MAY 05, 2025
**Drawn by:** JAS **Proj. Mgr.:** MG

**Revisions**

| No. | Date | Description |
|---|---|---|
| | | |
| | | |
| | | |
| | | |
| | | |
| | | |
| | | |

TELECOM
DETAILS SHEET

# TC2.02